22-150746/51/56-REV-01-RS

City of Portland
Reviewed for code compliance
Date: 12/22/23
Project #: 22-150746-DFS-01-RS

MiTek USA, Inc.
MiTek USA, Inc.
400 Sunrise Avenue, Suite 270
Roseville, CA 95661
Telephone 916-755-3571

Re: 23003711-A
JOE Ward

The truss drawing(s) referenced below have been prepared by MiTek USA, Inc. under my direct supervision based on the parameters provided by Trus-way Inc.

Pages or sheets covered by this seal: R75531279 thru R75531284

My license renewal date for the state of Oregon is December 31, 2023.

REGISTERED PROFESSIONAL ENGINEER
89200PE
OREGON
MAY 14, 2014
DAVID MERRILL BAXTER
RENEWAL DATE: 12-31-2023

April 3,2023

Baxter, David

IMPORTANT NOTE: The seal on these truss component designs is a certification that the engineer named is licensed in the jurisdiction(s) identified and that the designs comply with ANSI/TPI 1. These designs are based upon parameters shown (e.g., loads, supports, dimensions, shapes and design codes), which were given to MiTek or TRENCO. Any project specific information included is for MiTek's or TRENCO's customers file reference purpose only, and was not taken into account in the preparation of these designs. MiTek or TRENCO has not independently verified the applicability of the design parameters or the designs for any particular building. Before use, the building designer should verify applicability of design parameters and properly incorporate these designs into the overall building design per ANSI/TPI 1, Chapter 2.

Job	Truss	Truss Type	Qty	Ply	JOE Ward
23003711-A	A01	GABLE	1	1	R79331279 Job Reference (optional)

City of Portland
Reviewed for code compliance
Date: 12/22/23
Permit # 23-113957-2023-1 Page 1

Trus-Way, Vancouver, WA - 98661,

8.630 s Nov 19 2022 MiTek Industries, Inc. Mon Apr 03 11:39:57 2023 Page 1
ID:g0H_ty3B8ot6Fc0tH_MQ9jzUS9j-ts5TJCM_hUM4nx8FU-KuK1D4hWGZ?EEQhnBuYIzURQW

-2-0-0	5-1-13	10-0-0	14-10-4	19-6-6	20-0-0	22-0-0
2-0-0	5-1-13	4-10-4	4-10-3	4-8-2	0-5-10	2-0-0

Scale = 1:54.8

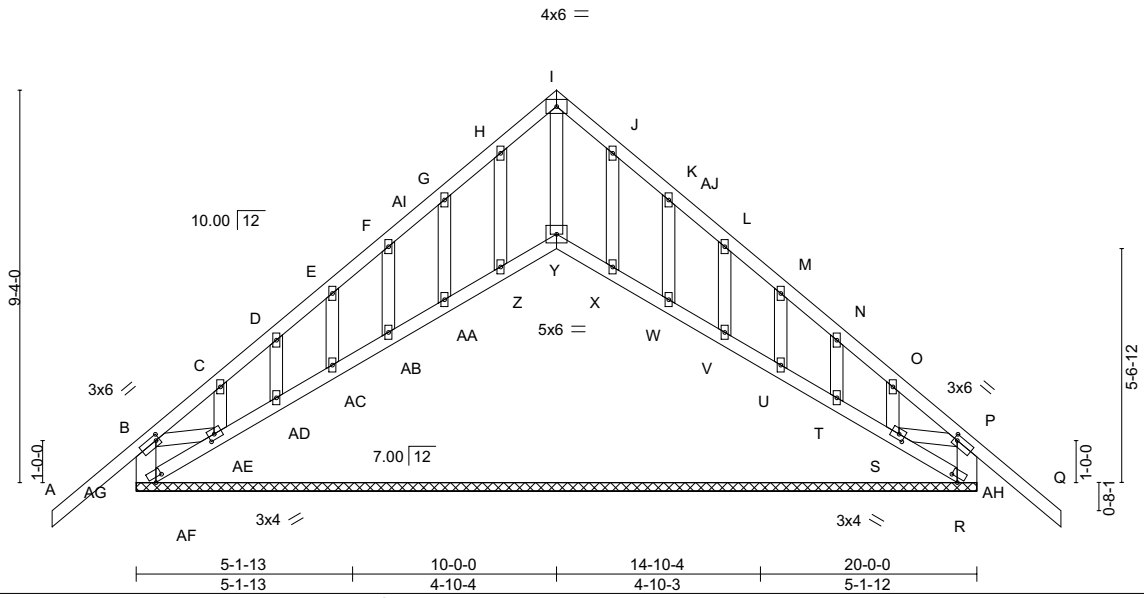

Plate Offsets (X,Y)-- [B:0-1-0,0-1-8], [P:0-1-0,0-1-8], [R:0-2-9,0-1-5], [S:0-1-12,0-1-8], [AE:0-1-12,0-1-8], [AF:0-2-9,0-1-5]

LOADING (psf)		SPACING-	2-0-0	CSI.		DEFL.	in	(loc)	l/defl	L/d	PLATES	GRIP
TCLL (roof)	25.0	Plate Grip DOL	1.15	TC	0.37	Vert(LL)	-0.03	Q	n/r	120	MT20	220/195
Snow (Pf/Pg)	20.8/30.0	Lumber DOL	1.15	BC	0.02	Vert(CT)	-0.06	Q	n/r	90		
TCDL	7.0	Rep Stress Incr	YES	WB	0.08	Horz(CT)	0.00	AH	n/a	n/a		
BCLL	0.0 *	Code IBC2018/TPI2014		Matrix-S							Weight: 122 lb	FT = 20%
BCDL	10.0											

LUMBER-
TOP CHORD 2x4 DF No.1&Btr G
BOT CHORD 2x4 DF No.1&Btr G
WEBS 2x4 DF Stud/Std G *Except*
B-AG,P-AH: 2x6 DF SS G
OTHERS 2x4 DF Stud/Std G

BRACING-
TOP CHORD Structural wood sheathing directly applied or 6-0-0 oc purlins, except end verticals.
BOT CHORD Rigid ceiling directly applied or 6-0-0 oc bracing.

REACTIONS. All bearings 20-0-0.
(lb) - Max Horz AF=-144(LC 10)
Max Uplift All uplift 100 lb or less at joint(s) AF, Y, AH, AA, AB, AC, AD, AE, W, V, U, T, S
Max Grav All reactions 250 lb or less at joint(s) Z, AA, AB, AC, AD, AE, X, W, V, U, T, S except AF=376(LC 16), Y=259(LC 12), AH=376(LC 16)

FORCES. (lb) - Max. Comp./Max. Ten. - All forces 250 (lb) or less except when shown.
TOP CHORD R-AH=-376/90

NOTES-
1) Unbalanced roof live loads have been considered for this design.
2) Wind: ASCE 7-16; Vult=100mph (3-second gust) Vasd=79mph; TCDL=4.2psf; BCDL=6.0psf; h=25ft; B=45ft; L=24ft; eave=4ft; Cat. II; Exp B; Enclosed; MWFRS (directional) and C-C Exterior(2E) -2-0-0 to 1-0-0, Interior(1) 1-0-0 to 7-0-0, Exterior(2R) 7-0-0 to 13-0-0 , Interior(1) 13-0-0 to 22-0-0 zone; cantilever left and right exposed ; end vertical left and right exposed;C-C for members and forces & MWFRS for reactions shown; Lumber DOL=1.60 plate grip DOL=1.60
3) Truss designed for wind loads in the plane of the truss only. For studs exposed to wind (normal to the face), see Standard Industry Gable End Details as applicable, or consult qualified building designer as per ANSI/TPI 1.
4) TCLL: ASCE 7-16; Pr=25.0 psf (roof LL: Lum DOL=1.15 Plate DOL=1.15); Pg=30.0 psf; Pf=20.8 psf (Lum DOL=1.15 Plate DOL=1.15); Is=1.0; Rough Cat B; Fully Exp.; Ce=0.9; Cs=1.00; Ct=1.10
5) This truss has been designed for greater of min roof live load of 12.0 psf or 2.00 times flat roof load of 20.8 psf on overhangs non-concurrent with other live loads.
6) All plates are 2x4 MT20 unless otherwise indicated.
7) Plates checked for a plus or minus 5 degree rotation about its center.
8) Gable requires continuous bottom chord bearing.
9) Gable studs spaced at 1-4-0 oc.
10) This truss has been designed for a 10.0 psf bottom chord live load nonconcurrent with any other live loads.
11) * This truss has been designed for a live load of 20.0psf on the bottom chord in all areas where a rectangle 3-6-0 tall by 2-0-0 wide will fit between the bottom chord and any other members.
12) A plate rating reduction of 20% has been applied for the green lumber members.
13) Bearing at joint(s) AF, AG, AH considers parallel to grain value using ANSI/TPI 1 angle to grain formula. Building designer should verify capacity of bearing surface.
14) Provide mechanical connection (by others) of truss to bearing plate capable of withstanding 100 lb uplift at joint(s) AF, Y, AH, AA, AB, AC, AD, AE, W, V, U, T, S.
15) Beveled plate or shim required to provide full bearing surface with truss chord at joint(s) Y, Z, AA, AB, AC, AD, AE, X, W, V, U, T,

Continued on page 2

REGISTERED PROFESSIONAL ENGINEER 89200PE OREGON MAY 14, 2014 DAVID MERRILL BAXTER

RENEWAL DATE: 12-31-2023
April 3,2023

WARNING - Verify design parameters and READ NOTES ON THIS AND INCLUDED MITEK REFERENCE PAGE MII-7473 rev. 5/19/2020 BEFORE USE.
Design valid for use only with MiTek® connectors. This design is based only upon parameters shown, and is for an individual building component, not a truss system. Before use, the building designer must verify the applicability of design parameters and properly incorporate this design into the overall building design. Bracing indicated is to prevent buckling of individual truss web and/or chord members only. Additional temporary and permanent bracing is always required for stability and to prevent collapse with possible personal injury and property damage. For general guidance regarding the fabrication, storage, delivery, erection and bracing of trusses and truss systems, see ***ANSI/TPI1 Quality Criteria, DSB-89 and BCSI Building Component Safety Information*** available from Truss Plate Institute, 2670 Crain Highway, Suite 203 Waldorf, MD 20601

MiTek
MiTek USA, Inc.
400 Sunrise Avenue, Suite 270
Roseville, CA 95661

City of Portland
Reviewed for code compliance
Date: 12/22/23
Permit # 23-113957-000-01-RS

NOTES-

16) This truss is designed in accordance with the 2018 International Building Code section 2306.1 and referenced standard ANSI/TPI 1.

WARNING - Verify design parameters and READ NOTES ON THIS AND INCLUDED MITEK REFERENCE PAGE MII-7473 rev. 5/19/2020 BEFORE USE.
Design valid for use only with MiTek® connectors. This design is based only upon parameters shown, and is for an individual building component, not a truss system. Before use, the building designer must verify the applicability of design parameters and properly incorporate this design into the overall building design. Bracing indicated is to prevent buckling of individual truss web and/or chord members only. Additional temporary and permanent bracing is always required for stability and to prevent collapse with possible personal injury and property damage. For general guidance regarding the fabrication, storage, delivery, erection and bracing of trusses and truss systems, see ***ANSI/TPI1 Quality Criteria, DSB-89 and BCSI Building Component Safety Information*** available from Truss Plate Institute, 2670 Crain Highway, Suite 203 Waldorf, MD 20601

MiTek USA, Inc.
400 Sunrise Avenue, Suite 270
Roseville, CA 95661

Job	Truss	Truss Type	Qty	Ply	JOE Ward
23003711-A	A02	Scissor	12	1	R79331280
					Job Reference (optional)

City of Portland
Reviewed for code compliance
Date: 12/22/23
Permit # 23-1139458-2023-1 Page 1

Trus-Way, Vancouver, WA - 98661,

8.630 s Nov 19 2022 MiTek Industries, Inc. Mon Apr 03 15:39:58 2023 Page 1
ID:g0H_ty3B8ot6Fc0tH_MQ9jzUS9j-M2frXYMcSnUxO5iS1or7sEmFQwXpkXZawRxR4kzURQV

-2-0-0	5-1-13	10-0-0	14-10-4	19-6-6	20-0-0	22-0-0
2-0-0	5-1-13	4-10-4	4-10-3	4-8-2	0-5-10	2-0-0

Scale = 1:57.6

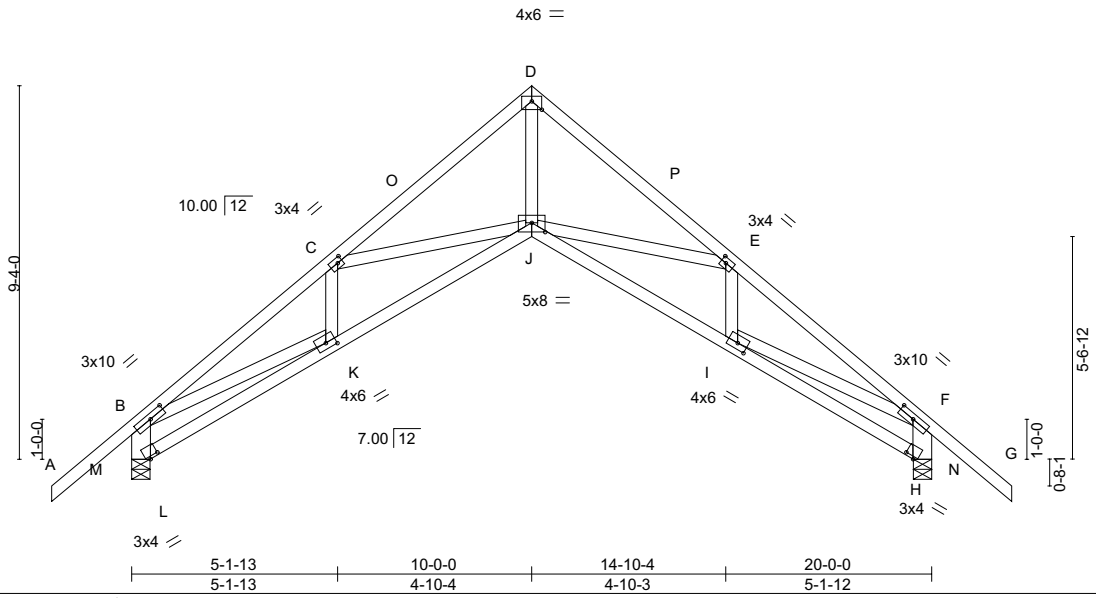

Plate Offsets (X,Y)-- [B:0-4-12,0-1-8], [C:0-1-8,0-1-8], [D:0-3-0,Edge], [E:0-1-8,0-1-8], [F:0-4-12,0-1-8], [H:0-2-13,0-0-13], [I:0-3-0,0-1-12], [J:0-4-0,0-2-12], [K:0-3-0,0-1-12], [L:0-2-13,0-0-13]

LOADING (psf)		**SPACING-**	2-0-0	**CSI.**		**DEFL.**	in	(loc)	l/defl	L/d	**PLATES**	**GRIP**
TCLL (roof)	25.0	Plate Grip DOL	1.15	TC	0.37	Vert(LL)	-0.10	J	>999	240	MT20	220/195
Snow (Pf/Pg)	20.8/30.0	Lumber DOL	1.15	BC	0.27	Vert(CT)	-0.25	J-K	>931	180		
TCDL	7.0	Rep Stress Incr	YES	WB	0.72	Horz(CT)	0.32	N	n/a	n/a		
BCLL	0.0 *	Code IBC2018/TPI2014		Matrix-MS		Wind(LL)	-0.02	J	>999	360	Weight: 116 lb	FT = 20%
BCDL	10.0											

LUMBER-
TOP CHORD 2x4 DF No.1&Btr G
BOT CHORD 2x4 DF No.1&Btr G
WEBS 2x4 DF Stud/Std G *Except*
B-M,F-N: 2x6 DF SS G

BRACING-
TOP CHORD Structural wood sheathing directly applied or 4-8-12 oc purlins, except end verticals.
BOT CHORD Rigid ceiling directly applied or 6-0-0 oc bracing.

REACTIONS. (size) M=0-5-8, N=0-5-8
Max Horz M=144(LC 11)
Max Uplift M=-6(LC 12), N=-6(LC 12)
Max Grav M=963(LC 2), N=963(LC 2)

FORCES. (lb) - Max. Comp./Max. Ten. - All forces 250 (lb) or less except when shown.
TOP CHORD B-C=-1880/0, C-D=-1614/0, D-E=-1614/0, E-F=-1880/0, L-M=-963/22, B-L=-939/0, H-N=-963/20, F-H=-939/0
BOT CHORD J-K=0/1593, I-J=0/1593
WEBS D-J=0/1620, E-J=-293/126, C-J=-293/122, B-K=0/1402, F-I=0/1402

NOTES-
1) Unbalanced roof live loads have been considered for this design.
2) Wind: ASCE 7-16; Vult=100mph (3-second gust) Vasd=79mph; TCDL=4.2psf; BCDL=6.0psf; h=25ft; B=45ft; L=24ft; eave=4ft; Cat. II; Exp B; Enclosed; MWFRS (directional) and C-C Exterior(2E) -2-0-0 to 1-0-0, Interior(1) 1-0-0 to 7-0-0, Exterior(2R) 7-0-0 to 13-0-0 , Interior(1) 13-0-0 to 22-0-0 zone; cantilever left and right exposed ; end vertical left and right exposed;C-C for members and forces & MWFRS for reactions shown; Lumber DOL=1.60 plate grip DOL=1.60
3) TCLL: ASCE 7-16; Pr=25.0 psf (roof LL: Lum DOL=1.15 Plate DOL=1.15); Pg=30.0 psf; Pf=20.8 psf (Lum DOL=1.15 Plate DOL=1.15); Is=1.0; Rough Cat B; Fully Exp.; Ce=0.9; Cs=1.00; Ct=1.10
4) This truss has been designed for greater of min roof live load of 12.0 psf or 2.00 times flat roof load of 20.8 psf on overhangs non-concurrent with other live loads.
5) Plates checked for a plus or minus 5 degree rotation about its center.
6) This truss has been designed for a 10.0 psf bottom chord live load nonconcurrent with any other live loads.
7) * This truss has been designed for a live load of 20.0psf on the bottom chord in all areas where a rectangle 3-6-0 tall by 2-0-0 wide will fit between the bottom chord and any other members.
8) A plate rating reduction of 20% has been applied for the green lumber members.
9) Bearing at joint(s) M, N considers parallel to grain value using ANSI/TPI 1 angle to grain formula. Building designer should verify capacity of bearing surface.
10) Provide mechanical connection (by others) of truss to bearing plate capable of withstanding 100 lb uplift at joint(s) M, N.
11) This truss is designed in accordance with the 2018 International Building Code section 2306.1 and referenced standard ANSI/TPI 1.

RENEWAL DATE: 12-31-2023
April 3,2023

WARNING - Verify design parameters and READ NOTES ON THIS AND INCLUDED MITEK REFERENCE PAGE MII-7473 rev. 5/19/2020 BEFORE USE.
Design valid for use only with MiTek® connectors. This design is based only upon parameters shown, and is for an individual building component, not a truss system. Before use, the building designer must verify the applicability of design parameters and properly incorporate this design into the overall building design. Bracing indicated is to prevent buckling of individual truss web and/or chord members only. Additional temporary and permanent bracing is always required for stability and to prevent collapse with possible personal injury and property damage. For general guidance regarding the fabrication, storage, delivery, erection and bracing of trusses and truss systems, see ***ANSI/TPI1 Quality Criteria, DSB-89 and BCSI Building Component Safety Information*** available from Truss Plate Institute, 2670 Crain Highway, Suite 203 Waldorf, MD 20601

MiTek USA, Inc.
400 Sunrise Avenue, Suite 270
Roseville, CA 95661

Job	Truss	Truss Type	Qty	Ply	JOE Ward
23003711-A	A03	SCISSORS	5	1	R79331281
					Job Reference (optional)

City of Portland
Reviewed for code compliance
Date: 12/22/23

Trus-Way, Vancouver, WA - 98661, 8.630 s Nov 19 2022 MiTek Industries, Inc. Mon Apr 3 11:40:00 2023 Page 1
ID:g0H_ty3B8ot6Fc0tH_MQ9jzUS9j-IRnbyEOs_PkfeCsq9DtbyfrdBkD2CRSsNlQY9dzURQT

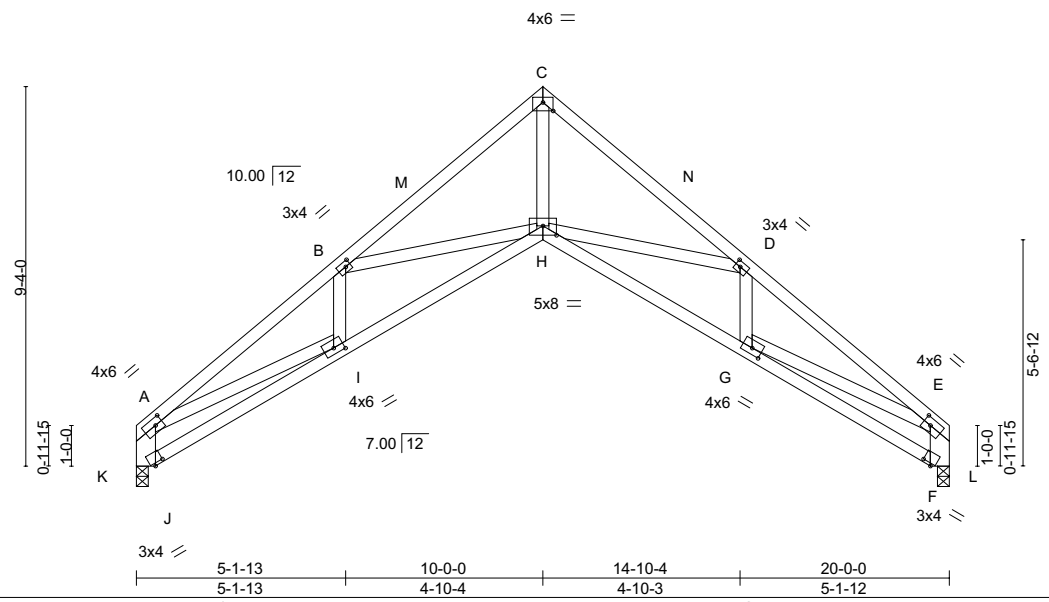

Plate Offsets (X,Y)-- [A:0-2-4,0-2-0], [B:0-1-8,0-1-8], [C:0-3-0,Edge], [D:0-1-8,0-1-8], [E:0-2-4,0-2-0], [F:0-2-13,0-0-13], [G:0-3-0,0-1-12], [H:0-4-0,0-2-12], [I:0-3-0,0-1-12], [J:0-2-13,0-0-13]

LOADING (psf)		**SPACING-**	2-0-0	**CSI.**		**DEFL.**	in	(loc)	l/defl	L/d	**PLATES**	**GRIP**
TCLL (roof)	25.0	Plate Grip DOL	1.15	TC	0.22	Vert(LL)	-0.10	H	>999	240	MT20	220/195
Snow (Pf/Pg)	20.8/30.0	Lumber DOL	1.15	BC	0.29	Vert(CT)	-0.26	H-I	>901	180		
TCDL	7.0	Rep Stress Incr	YES	WB	0.75	Horz(CT)	0.33	L	n/a	n/a		
BCLL	0.0 *	Code IBC2018/TPI2014		Matrix-MS		Wind(LL)	0.03	H	>999	360	Weight: 109 lb	FT = 20%
BCDL	10.0											

LUMBER-
TOP CHORD 2x4 DF No.1&Btr G
BOT CHORD 2x4 DF No.1&Btr G
WEBS 2x4 DF Stud/Std G *Except*
A-K,E-L: 2x6 DF SS G

BRACING-
TOP CHORD Structural wood sheathing directly applied or 4-7-6 oc purlins, except end verticals.
BOT CHORD Rigid ceiling directly applied or 10-0-0 oc bracing.

REACTIONS. (size) K=0-3-8, L=0-3-8
Max Horz K=-121(LC 10)
Max Grav K=820(LC 2), L=820(LC 2)

FORCES. (lb) - Max. Comp./Max. Ten. - All forces 250 (lb) or less except when shown.
TOP CHORD A-B=-1974/0, B-C=-1676/0, C-D=-1676/0, D-E=-1974/0, J-K=-820/0, A-J=-844/0, F-L=-820/0, E-F=-844/0
BOT CHORD I-J=-112/270, H-I=0/1689, G-H=0/1689
WEBS C-H=0/1706, D-H=-334/115, B-H=-334/111, A-I=0/1401, E-G=0/1401

NOTES-
1) Unbalanced roof live loads have been considered for this design.
2) Wind: ASCE 7-16; Vult=100mph (3-second gust) Vasd=79mph; TCDL=4.2psf; BCDL=6.0psf; h=25ft; B=45ft; L=24ft; eave=4ft; Cat. II; Exp B; Enclosed; MWFRS (directional) and C-C Exterior(2E) 0-2-13 to 3-2-13, Interior(1) 3-2-13 to 7-0-0, Exterior(2R) 7-0-0 to 13-0-0, Interior(1) 13-0-0 to 19-9-3 zone; cantilever left and right exposed ; end vertical left and right exposed;C-C for members and forces & MWFRS for reactions shown; Lumber DOL=1.60 plate grip DOL=1.60
3) TCLL: ASCE 7-16; Pr=25.0 psf (roof LL: Lum DOL=1.15 Plate DOL=1.15); Pg=30.0 psf; Pf=20.8 psf (Lum DOL=1.15 Plate DOL=1.15); Is=1.0; Rough Cat B; Fully Exp.; Ce=0.9; Cs=1.00; Ct=1.10
4) Plates checked for a plus or minus 5 degree rotation about its center.
5) This truss has been designed for a 10.0 psf bottom chord live load nonconcurrent with any other live loads.
6) * This truss has been designed for a live load of 20.0psf on the bottom chord in all areas where a rectangle 3-6-0 tall by 2-0-0 wide will fit between the bottom chord and any other members.
7) A plate rating reduction of 20% has been applied for the green lumber members.
8) Bearing at joint(s) K, L considers parallel to grain value using ANSI/TPI 1 angle to grain formula. Building designer should verify capacity of bearing surface.
9) This truss is designed in accordance with the 2018 International Building Code section 2306.1 and referenced standard ANSI/TPI 1.

REGISTERED PROFESSIONAL ENGINEER
89200PE
OREGON
MAY 14, 2014
DAVID MERRILL BAXTER

RENEWAL DATE: 12-31-2023
April 3,2023

WARNING - Verify design parameters and READ NOTES ON THIS AND INCLUDED MITEK REFERENCE PAGE MII-7473 rev. 5/19/2020 BEFORE USE.
Design valid for use only with MiTek® connectors. This design is based only upon parameters shown, and is for an individual building component, not a truss system. Before use, the building designer must verify the applicability of design parameters and properly incorporate this design into the overall building design. Bracing indicated is to prevent buckling of individual truss web and/or chord members only. Additional temporary and permanent bracing is always required for stability and to prevent collapse with possible personal injury and property damage. For general guidance regarding the fabrication, storage, delivery, erection and bracing of trusses and truss systems, see ***ANSI/TPI1 Quality Criteria, DSB-89 and BCSI Building Component Safety Information*** available from Truss Plate Institute, 2670 Crain Highway, Suite 203 Waldorf, MD 20601

MiTek
MiTek USA, Inc.
400 Sunrise Avenue, Suite 270
Roseville, CA 95661

Job	Truss	Truss Type	Qty	Ply	JOE Ward
23003711-A	A04	SCISSORS	5	1	R79331282 Job Reference (optional)

City of Portland
Reviewed for code compliance
Date: 12/22/23

Trus-Way, Vancouver, WA - 98661, 8.630 s Nov 19 2022 MiTek Industries, Inc. Mon Apr 3 14:40:01 2023 Page 1
ID:g0H_ty3B8ot6Fc0tH_MQ9jzUS9j-mdL_9aPUkitWFYRjwOqUtOmg7ZKxu?0cO95h3zURQS

-2-0-0	5-1-13	10-0-0	14-10-4	19-6-6	20-0-0
2-0-0	5-1-13	4-10-4	4-10-3	4-8-2	0-5-10

Scale = 1:57.6

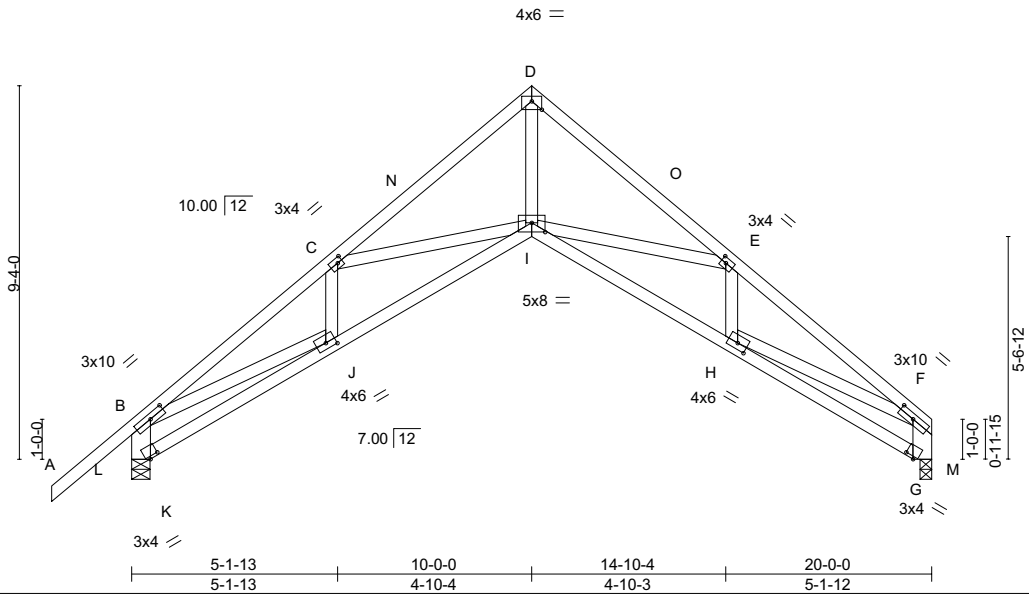

Plate Offsets (X,Y)-- [B:0-4-12,0-1-8], [C:0-1-8,0-1-8], [D:0-3-0,Edge], [E:0-1-8,0-1-8], [F:0-4-12,0-1-8], [G:0-2-13,0-0-13], [H:0-3-0,0-1-12], [I:0-4-0,0-2-12], [J:0-3-0,0-1-12], [K:0-2-13,0-0-13]

LOADING (psf)		**SPACING-** 2-0-0	**CSI.**		**DEFL.**	in	(loc)	l/defl	L/d	**PLATES**	**GRIP**
TCLL (roof)	25.0	Plate Grip DOL 1.15	TC	0.37	Vert(LL)	-0.10	I	>999	240	MT20	220/195
Snow (Pf/Pg)	20.8/30.0	Lumber DOL 1.15	BC	0.28	Vert(CT)	-0.26	H-I	>915	180		
TCDL	7.0	Rep Stress Incr YES	WB	0.73	Horz(CT)	0.32	M	n/a	n/a		
BCLL	0.0 *	Code IBC2018/TPI2014	Matrix-MS		Wind(LL)	0.02	I	>999	360	Weight: 112 lb	FT = 20%
BCDL	10.0										

LUMBER-
TOP CHORD 2x4 DF No.1&Btr G
BOT CHORD 2x4 DF No.1&Btr G
WEBS 2x4 DF Stud/Std G *Except*
B-L,F-M: 2x6 DF SS G

BRACING-
TOP CHORD Structural wood sheathing directly applied or 4-7-12 oc purlins, except end verticals.
BOT CHORD Rigid ceiling directly applied or 10-0-0 oc bracing, Except: 6-0-0 oc bracing: J-K.

REACTIONS. (size) L=0-5-8, M=0-3-8
Max Horz L=138(LC 11)
Max Uplift L=-8(LC 12)
Max Grav L=971(LC 2), M=812(LC 2)

FORCES. (lb) - Max. Comp./Max. Ten. - All forces 250 (lb) or less except when shown.
TOP CHORD B-C=-1903/0, C-D=-1644/0, D-E=-1646/0, E-F=-1950/0, K-L=-971/24, B-K=-947/19, G-M=-812/0, F-G=-836/0
BOT CHORD I-J=0/1614, H-I=0/1668
WEBS D-I=0/1663, E-I=-335/117, C-I=-292/100, B-J=0/1421, F-H=0/1382

NOTES-
1) Unbalanced roof live loads have been considered for this design.
2) Wind: ASCE 7-16; Vult=100mph (3-second gust) Vasd=79mph; TCDL=4.2psf; BCDL=6.0psf; h=25ft; B=45ft; L=24ft; eave=4ft; Cat. II; Exp B; Enclosed; MWFRS (directional) and C-C Exterior(2E) -2-0-0 to 1-0-0, Interior(1) 1-0-0 to 7-0-0, Exterior(2R) 7-0-0 to 13-0-0 , Interior(1) 13-0-0 to 19-9-3 zone; cantilever left and right exposed ; end vertical left and right exposed;C-C for members and forces & MWFRS for reactions shown; Lumber DOL=1.60 plate grip DOL=1.60
3) TCLL: ASCE 7-16; Pr=25.0 psf (roof LL: Lum DOL=1.15 Plate DOL=1.15); Pg=30.0 psf; Pf=20.8 psf (Lum DOL=1.15 Plate DOL=1.15); Is=1.0; Rough Cat B; Fully Exp.; Ce=0.9; Cs=1.00; Ct=1.10
4) This truss has been designed for greater of min roof live load of 12.0 psf or 2.00 times flat roof load of 20.8 psf on overhangs non-concurrent with other live loads.
5) Plates checked for a plus or minus 5 degree rotation about its center.
6) This truss has been designed for a 10.0 psf bottom chord live load nonconcurrent with any other live loads.
7) * This truss has been designed for a live load of 20.0psf on the bottom chord in all areas where a rectangle 3-6-0 tall by 2-0-0 wide will fit between the bottom chord and any other members.
8) A plate rating reduction of 20% has been applied for the green lumber members.
9) Bearing at joint(s) L, M considers parallel to grain value using ANSI/TPI 1 angle to grain formula. Building designer should verify capacity of bearing surface.
10) Provide mechanical connection (by others) of truss to bearing plate capable of withstanding 100 lb uplift at joint(s) L.
11) This truss is designed in accordance with the 2018 International Building Code section 2306.1 and referenced standard ANSI/TPI 1.

REGISTERED PROFESSIONAL ENGINEER
89200PE
OREGON
MAY 14, 2014
DAVID MERRILL BAXTER

RENEWAL DATE: 12-31-2023
April 3,2023

WARNING - Verify design parameters and READ NOTES ON THIS AND INCLUDED MITEK REFERENCE PAGE MII-7473 rev. 5/19/2020 BEFORE USE.
Design valid for use only with MiTek® connectors. This design is based only upon parameters shown, and is for an individual building component, not a truss system. Before use, the building designer must verify the applicability of design parameters and properly incorporate this design into the overall building design. Bracing indicated is to prevent buckling of individual truss web and/or chord members only. Additional temporary and permanent bracing is always required for stability and to prevent collapse with possible personal injury and property damage. For general guidance regarding the fabrication, storage, delivery, erection and bracing of trusses and truss systems, see ***ANSI/TPI1 Quality Criteria, DSB-89 and BCSI Building Component Safety Information*** available from Truss Plate Institute, 2670 Crain Highway, Suite 203 Waldorf, MD 20601

MiTek USA, Inc.
400 Sunrise Avenue, Suite 270
Roseville, CA 95661

Job	Truss	Truss Type	Qty	Ply	JOE Ward
23003711-A	A05	Scissor	2	1	R79331283 Job Reference (optional)

City of Portland
Reviewed for code compliance
Date: 12/22/23
Permit # 23-1140-03 2023-1140

Trus-Way, Vancouver, WA - 98661,

8.630 s Nov 19 2022 MiTek Industries, Inc. Mon Apr 3 14:40:03 2023 Page 1
ID:g0H_ty3B8ot6Fc0tH_MQ9jzUS9j-i?TkaGQlGK7EVsoPqLRIZIT5AxFzPooJ3ieCmyzURQQ

-2-0-0	5-1-13	10-0-0	14-10-4	19-6-6	20-0-0	22-0-0
2-0-0	5-1-13	4-10-4	4-10-3	4-8-2	0-5-10	2-0-0

Scale = 1:57.6

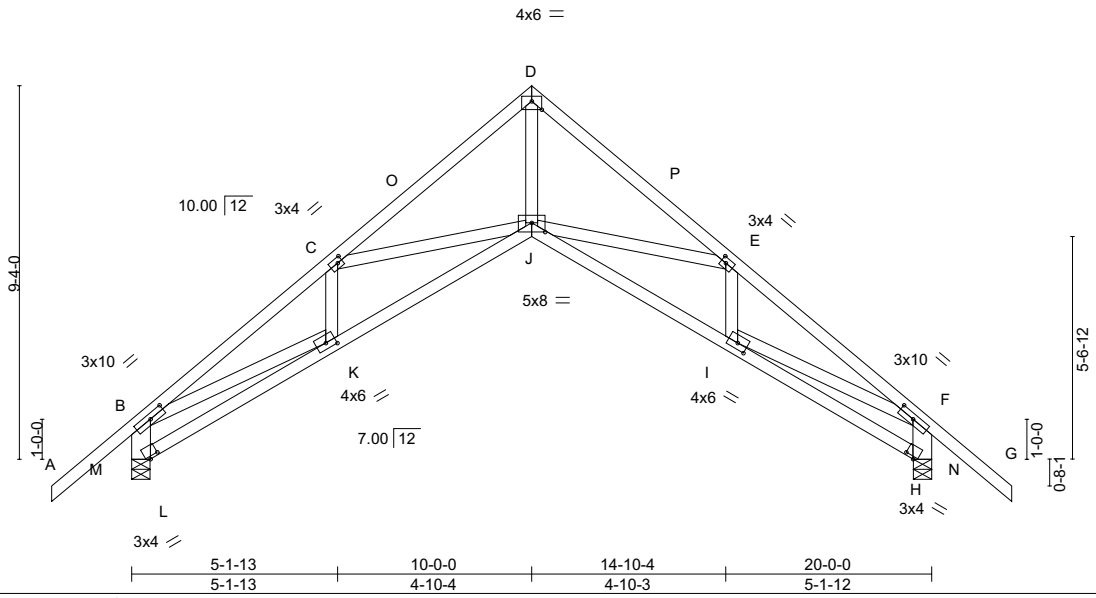

Plate Offsets (X,Y)-- [B:0-4-12,0-1-8], [C:0-1-8,0-1-8], [D:0-3-0,Edge], [E:0-1-8,0-1-8], [F:0-4-12,0-1-8], [H:0-2-13,0-0-13], [I:0-3-0,0-1-12], [J:0-4-0,0-2-12], [K:0-3-0,0-1-12], [L:0-2-13,0-0-13]

LOADING (psf)		SPACING-	2-0-0	CSI.		DEFL.	in	(loc)	l/defl	L/d	PLATES	GRIP
TCLL (roof)	25.0	Plate Grip DOL	1.15	TC	0.37	Vert(LL)	-0.10	J	>999	240	MT20	220/195
Snow (Pf/Pg)	20.8/30.0	Lumber DOL	1.15	BC	0.27	Vert(CT)	-0.25	J-K	>931	180		
TCDL	7.0	Rep Stress Incr	YES	WB	0.72	Horz(CT)	0.32	N	n/a	n/a		
BCLL	0.0 *	Code IBC2018/TPI2014		Matrix-MS		Wind(LL)	-0.02	J	>999	360	Weight: 116 lb	FT = 20%
BCDL	10.0											

LUMBER-
TOP CHORD 2x4 DF No.1&Btr G
BOT CHORD 2x4 DF No.1&Btr G
WEBS 2x4 DF Stud/Std G *Except*
B-M,F-N: 2x6 DF SS G

BRACING-
TOP CHORD Structural wood sheathing directly applied or 4-8-12 oc purlins, except end verticals.
BOT CHORD Rigid ceiling directly applied or 6-0-0 oc bracing.

REACTIONS. (size) M=0-5-8, N=0-5-8
Max Horz M=144(LC 11)
Max Uplift M=-6(LC 12), N=-6(LC 12)
Max Grav M=963(LC 2), N=963(LC 2)

FORCES. (lb) - Max. Comp./Max. Ten. - All forces 250 (lb) or less except when shown.
TOP CHORD B-C=-1880/0, C-D=-1614/0, D-E=-1614/0, E-F=-1880/0, L-M=-963/22, B-L=-939/0, H-N=-963/20, F-H=-939/0
BOT CHORD J-K=0/1593, I-J=0/1593
WEBS D-J=0/1620, E-J=-293/126, C-J=-293/122, B-K=0/1402, F-I=0/1402

NOTES-
1) Unbalanced roof live loads have been considered for this design.
2) Wind: ASCE 7-16; Vult=100mph (3-second gust) Vasd=79mph; TCDL=4.2psf; BCDL=6.0psf; h=25ft; B=45ft; L=24ft; eave=4ft; Cat. II; Exp B; Enclosed; MWFRS (directional) and C-C Exterior(2E) -2-0-0 to 1-0-0, Interior(1) 1-0-0 to 7-0-0, Exterior(2R) 7-0-0 to 13-0-0 , Interior(1) 13-0-0 to 22-0-0 zone; cantilever left and right exposed ; end vertical left and right exposed;C-C for members and forces & MWFRS for reactions shown; Lumber DOL=1.60 plate grip DOL=1.60
3) TCLL: ASCE 7-16; Pr=25.0 psf (roof LL: Lum DOL=1.15 Plate DOL=1.15); Pg=30.0 psf; Pf=20.8 psf (Lum DOL=1.15 Plate DOL=1.15); Is=1.0; Rough Cat B; Fully Exp.; Ce=0.9; Cs=1.00; Ct=1.10
4) This truss has been designed for greater of min roof live load of 12.0 psf or 2.00 times flat roof load of 20.8 psf on overhangs non-concurrent with other live loads.
5) Plates checked for a plus or minus 5 degree rotation about its center.
6) This truss has been designed for a 10.0 psf bottom chord live load nonconcurrent with any other live loads.
7) * This truss has been designed for a live load of 20.0psf on the bottom chord in all areas where a rectangle 3-6-0 tall by 2-0-0 wide will fit between the bottom chord and any other members.
8) A plate rating reduction of 20% has been applied for the green lumber members.
9) Bearing at joint(s) M, N considers parallel to grain value using ANSI/TPI 1 angle to grain formula. Building designer should verify capacity of bearing surface.
10) Provide mechanical connection (by others) of truss to bearing plate capable of withstanding 100 lb uplift at joint(s) M, N.
11) This truss is designed in accordance with the 2018 International Building Code section 2306.1 and referenced standard ANSI/TPI 1.

RENEWAL DATE: 12-31-2023
April 3,2023

WARNING - Verify design parameters and READ NOTES ON THIS AND INCLUDED MITEK REFERENCE PAGE MII-7473 rev. 5/19/2020 BEFORE USE.
Design valid for use only with MiTek® connectors. This design is based only upon parameters shown, and is for an individual building component, not a truss system. Before use, the building designer must verify the applicability of design parameters and properly incorporate this design into the overall building design. Bracing indicated is to prevent buckling of individual truss web and/or chord members only. Additional temporary and permanent bracing is always required for stability and to prevent collapse with possible personal injury and property damage. For general guidance regarding the fabrication, storage, delivery, erection and bracing of trusses and truss systems, see ***ANSI/TPI1 Quality Criteria, DSB-89 and BCSI Building Component Safety Information*** available from Truss Plate Institute, 2670 Crain Highway, Suite 203 Waldorf, MD 20601

MiTek USA, Inc.
400 Sunrise Avenue, Suite 270
Roseville, CA 95661

City of Portland
Reviewed for code compliance
Date: 12/22/23

Job	Truss	Truss Type	Qty	Ply	JOE Ward
23003711-A	A06	GABLE	1	1	R79531284
					Job Reference (optional)

Trus-Way, Vancouver, WA - 98661,

8.630 s Nov 19 2022 MiTek Industries, Inc. Mon Apr 03 14:40:05 2023 Page 1
ID:g0H_ty3B8ot6Fc0tH_MQ9jzUS9j-fOaU?yS?oxNxkAloymTmfjYRfl_QtsCcX07JqqzURQO

-2-0-0	5-1-13	10-0-0	14-10-4	19-6-6	20-0-0	22-0-0
2-0-0	5-1-13	4-10-4	4-10-3	4-8-2	0-5-10	2-0-0

Scale = 1:54.8

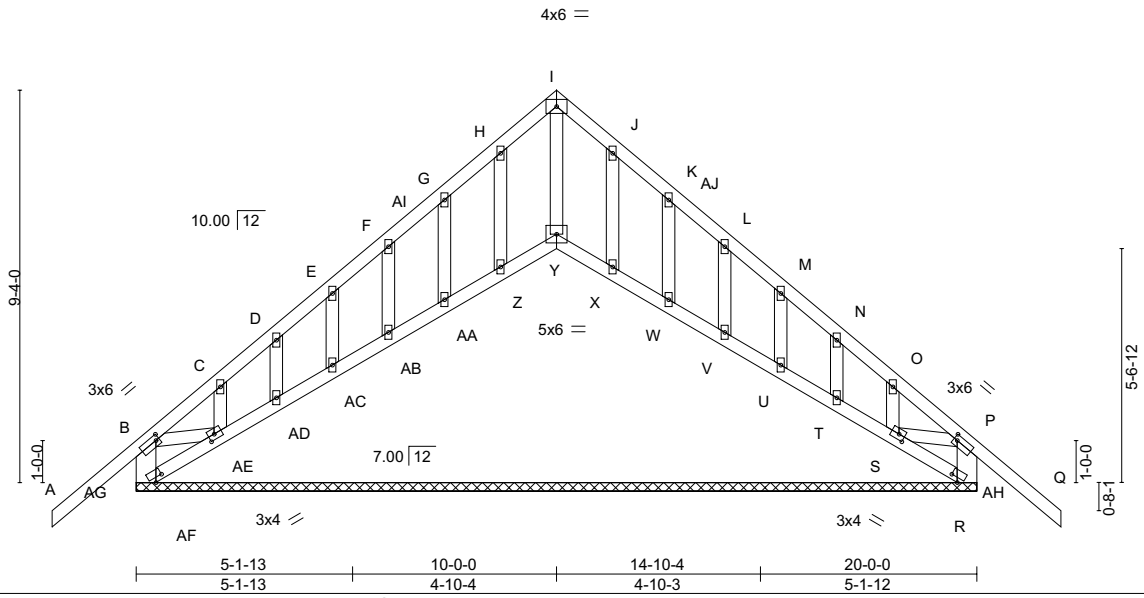

Plate Offsets (X,Y)-- [B:0-1-0,0-1-8], [P:0-1-0,0-1-8], [R:0-2-9,0-1-5], [S:0-1-12,0-1-8], [AE:0-1-12,0-1-8], [AF:0-2-9,0-1-5]

LOADING (psf)		SPACING-	2-0-0	CSI.		DEFL.	in	(loc)	l/defl	L/d	PLATES	GRIP
TCLL (roof)	25.0	Plate Grip DOL	1.15	TC	0.37	Vert(LL)	-0.03	Q	n/r	120	MT20	220/195
Snow (Pf/Pg)	20.8/30.0	Lumber DOL	1.15	BC	0.02	Vert(CT)	-0.06	Q	n/r	90		
TCDL	7.0	Rep Stress Incr	YES	WB	0.08	Horz(CT)	0.00	AH	n/a	n/a		
BCLL	0.0 *	Code IBC2018/TPI2014		Matrix-S							Weight: 122 lb	FT = 20%
BCDL	10.0											

LUMBER-
TOP CHORD 2x4 DF No.1&Btr G
BOT CHORD 2x4 DF No.1&Btr G
WEBS 2x4 DF Stud/Std G *Except*
B-AG,P-AH: 2x6 DF SS G
OTHERS 2x4 DF Stud/Std G

BRACING-
TOP CHORD Structural wood sheathing directly applied or 6-0-0 oc purlins, except end verticals.
BOT CHORD Rigid ceiling directly applied or 6-0-0 oc bracing.

REACTIONS. All bearings 20-0-0.
(lb) - Max Horz AF=-144(LC 10)
Max Uplift All uplift 100 lb or less at joint(s) AF, Y, AH, AA, AB, AC, AD, AE, W, V, U, T, S
Max Grav All reactions 250 lb or less at joint(s) Z, AA, AB, AC, AD, AE, X, W, V, U, T, S except AF=376(LC 16), Y=259(LC 12), AH=376(LC 16)

FORCES. (lb) - Max. Comp./Max. Ten. - All forces 250 (lb) or less except when shown.
TOP CHORD R-AH=-376/90

NOTES-
1) Unbalanced roof live loads have been considered for this design.
2) Wind: ASCE 7-16; Vult=100mph (3-second gust) Vasd=79mph; TCDL=4.2psf; BCDL=6.0psf; h=25ft; B=45ft; L=24ft; eave=4ft; Cat. II; Exp B; Enclosed; MWFRS (directional) and C-C Exterior(2E) -2-0-0 to 1-0-0, Interior(1) 1-0-0 to 7-0-0, Exterior(2R) 7-0-0 to 13-0-0 , Interior(1) 13-0-0 to 22-0-0 zone; cantilever left and right exposed ; end vertical left and right exposed;C-C for members and forces & MWFRS for reactions shown; Lumber DOL=1.60 plate grip DOL=1.60
3) Truss designed for wind loads in the plane of the truss only. For studs exposed to wind (normal to the face), see Standard Industry Gable End Details as applicable, or consult qualified building designer as per ANSI/TPI 1.
4) TCLL: ASCE 7-16; Pr=25.0 psf (roof LL: Lum DOL=1.15 Plate DOL=1.15); Pg=30.0 psf; Pf=20.8 psf (Lum DOL=1.15 Plate DOL=1.15); Is=1.0; Rough Cat B; Fully Exp.; Ce=0.9; Cs=1.00; Ct=1.10
5) This truss has been designed for greater of min roof live load of 12.0 psf or 2.00 times flat roof load of 20.8 psf on overhangs non-concurrent with other live loads.
6) All plates are 2x4 MT20 unless otherwise indicated.
7) Plates checked for a plus or minus 5 degree rotation about its center.
8) Gable requires continuous bottom chord bearing.
9) Gable studs spaced at 1-4-0 oc.
10) This truss has been designed for a 10.0 psf bottom chord live load nonconcurrent with any other live loads.
11) * This truss has been designed for a live load of 20.0psf on the bottom chord in all areas where a rectangle 3-6-0 tall by 2-0-0 wide will fit between the bottom chord and any other members.
12) A plate rating reduction of 20% has been applied for the green lumber members.
13) Bearing at joint(s) AF, AG, AH considers parallel to grain value using ANSI/TPI 1 angle to grain formula. Building designer should verify capacity of bearing surface.
14) Provide mechanical connection (by others) of truss to bearing plate capable of withstanding 100 lb uplift at joint(s) AF, Y, AH, AA, AB, AC, AD, AE, W, V, U, T, S.
15) Beveled plate or shim required to provide full bearing surface with truss chord at joint(s) Y, Z, AA, AB, AC, AD, AE, X, W, V, U, T,

Continued on page 2

RENEWAL DATE: 12-31-2023
April 3,2023

WARNING - Verify design parameters and READ NOTES ON THIS AND INCLUDED MITEK REFERENCE PAGE MII-7473 rev. 5/19/2020 BEFORE USE.
Design valid for use only with MiTek® connectors. This design is based only upon parameters shown, and is for an individual building component, not a truss system. Before use, the building designer must verify the applicability of design parameters and properly incorporate this design into the overall building design. Bracing indicated is to prevent buckling of individual truss web and/or chord members only. Additional temporary and permanent bracing is always required for stability and to prevent collapse with possible personal injury and property damage. For general guidance regarding the fabrication, storage, delivery, erection and bracing of trusses and truss systems, see ***ANSI/TPI1 Quality Criteria, DSB-89 and BCSI Building Component Safety Information*** available from Truss Plate Institute, 2670 Crain Highway, Suite 203 Waldorf, MD 20601

MiTek USA, Inc.
400 Sunrise Avenue, Suite 270
Roseville, CA 95661

City of Portland
Reviewed for code compliance
R79531284
Date: 12/22/23
Permit # 23-114005-000-00-RS

NOTES-

16) This truss is designed in accordance with the 2018 International Building Code section 2306.1 and referenced standard ANSI/TPI 1.

WARNING - Verify design parameters and READ NOTES ON THIS AND INCLUDED MITEK REFERENCE PAGE MII-7473 rev. 5/19/2020 BEFORE USE.
Design valid for use only with MiTek® connectors. This design is based only upon parameters shown, and is for an individual building component, not a truss system. Before use, the building designer must verify the applicability of design parameters and properly incorporate this design into the overall building design. Bracing indicated is to prevent buckling of individual truss web and/or chord members only. Additional temporary and permanent bracing is always required for stability and to prevent collapse with possible personal injury and property damage. For general guidance regarding the fabrication, storage, delivery, erection and bracing of trusses and truss systems, see ***ANSI/TPI1 Quality Criteria, DSB-89 and BCSI Building Component Safety Information*** available from Truss Plate Institute, 2670 Crain Highway, Suite 203 Waldorf, MD 20601

MiTek USA, Inc.
400 Sunrise Avenue, Suite 270
Roseville, CA 95661

City of Portland
Reviewed for code compliance
Date: 12/22/23
Project #: 22-150746-DFS-01-RS

Symbols

PLATE LOCATION AND ORIENTATION

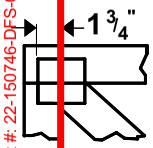

Center plate on joint unless x, y offsets are indicated. Dimensions are in ft-in-sixteenths. Apply plates to both sides of truss and fully embed teeth.

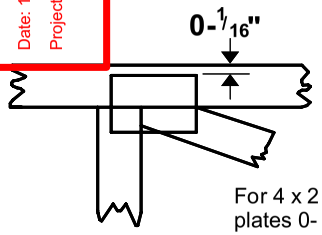

For 4 x 2 orientation, locate plates 0- 1/16" from outside edge of truss.

This symbol indicates the required direction of slots in connector plates.

*** Plate location details available in MiTek 20/20 software or upon request.**

PLATE SIZE

4 x 4

The first dimension is the plate width measured perpendicular to slots. Second dimension is the length parallel to slots.

LATERAL BRACING LOCATION

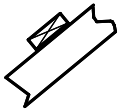

Indicated by symbol shown and/or by text in the bracing section of the output. Use T or I bracing if indicated.

BEARING

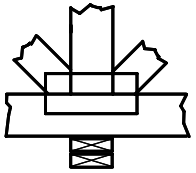

Indicates location where bearings (supports) occur. Icons vary but reaction section indicates joint number where bearings occur. Min size shown is for crushing only.

Industry Standards:

ANSI/TPI1: National Design Specification for Metal Plate Connected Wood Truss Construction.
DSB-89: Design Standard for Bracing.
BCSI: Building Component Safety Information, Guide to Good Practice for Handling, Installing & Bracing of Metal Plate Connected Wood Trusses.

Numbering System

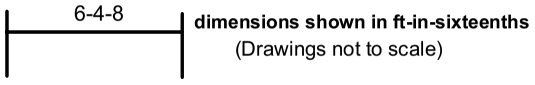

dimensions shown in ft-in-sixteenths
(Drawings not to scale)

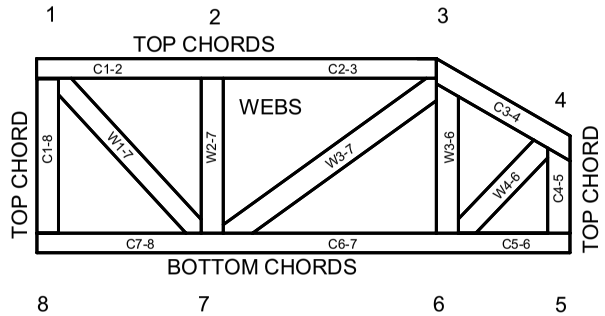

JOINTS ARE GENERALLY NUMBERED/LETTERED CLOCKWISE AROUND THE TRUSS STARTING AT THE JOINT FARTHEST TO THE LEFT.

CHORDS AND WEBS ARE IDENTIFIED BY END JOINT NUMBERS/LETTERS.

PRODUCT CODE APPROVALS

ICC-ES Reports:

ESR-1311, ESR-1352, ESR1988
ER-3907, ESR-2362, ESR-1397, ESR-3282

Trusses are designed for wind loads in the plane of the truss unless otherwise shown.

Lumber design values are in accordance with ANSI/TPI 1 section 6.3 These truss designs rely on lumber values established by others.

© 2012 MiTek® All Rights Reserved

MiTek Engineering Reference Sheet: MII-7473 rev. 5/19/2020

General Safety Notes

Failure to Follow Could Cause Property Damage or Personal Injury

1. Additional stability bracing for truss system, e.g. diagonal or X-bracing, is always required. See BCSI.
2. Truss bracing must be designed by an engineer. For wide truss spacing, individual lateral braces themselves may require bracing, or alternative Tor I bracing should be considered.
3. Never exceed the design loading shown and never stack materials on inadequately braced trusses.
4. Provide copies of this truss design to the building designer, erection supervisor, property owner and all other interested parties.
5. Cut members to bear tightly against each other.
6. Place plates on each face of truss at each joint and embed fully. Knots and wane at joint locations are regulated by ANSI/TPI 1.
7. Design assumes trusses will be suitably protected from the environment in accord with ANSI/TPI 1.
8. Unless otherwise noted, moisture content of lumber shall not exceed 19% at time of fabrication.
9. Unless expressly noted, this design is not applicable for use with fire retardant, preservative treated, or green lumber.
10. Camber is a non-structural consideration and is the responsibility of truss fabricator. General practice is to camber for dead load deflection.
11. Plate type, size, orientation and location dimensions indicated are minimum plating requirements.
12. Lumber used shall be of the species and size, and in all respects, equal to or better than that specified.
13. Top chords must be sheathed or purlins provided at spacing indicated on design.
14. Bottom chords require lateral bracing at 10 ft. spacing, or less, if no ceiling is installed, unless otherwise noted.
15. Connections not shown are the responsibility of others.
16. Do not cut or alter truss member or plate without prior approval of an engineer.
17. Install and load vertically unless indicated otherwise.
18. Use of green or treated lumber may pose unacceptable environmental, health or performance risks. Consult with project engineer before use.
19. Review all portions of this design (front, back, words and pictures) before use. Reviewing pictures alone is not sufficient.
20. Design assumes manufacture in accordance with ANSI/TPI 1 Quality Criteria.
21. The design does not take into account any dynamic or other loads other than those expressly stated.