SUBMITTAL REVIEW COVER SHEET

From: Josh Clark
TEAM Construction LLC
6701 NE 42nd Street
Vancouver, WA 98661
(Phone) 360-699-1477

Sub or Supplier: Tyler Thompson
American Products Inc.
13909 Lynmar Boulevard
Tampa, FL 33626

To: Grant Hunter
Schmidt Architects
16101 SW 72nd Ave., Ste 135
Portland, OR 97224

Date Submitted: January 24, 2024

Arch. Proj No.:
Project: 24009 - Chipotle Halsey

Submittal No. **Dated**	**Specification Section No. & Title** **Submittal Description**
004-R1	10590 CANOPIES
	Revised Canopy Shop Drawings

REVIEWED BY: TEAM Construction LLC
Review is for general design only. Subcontractor and or Supplier are responsible for dimensions, quantities and full compliance with the requirements of the contract documents. Review or approval by the architect or engineer does not relieve the Subcontractor and or Supplier of the responsibilities required by the terms and conditions of the agreement with TEAM Construction LLC.

BY: _____ DATE: January 24, 2024

AREA FOR OTHER REVIEW STAMPS AND COMMENTS:

☑ NO EXCEPTION TAKEN ☐ MAKE CORRECTIONS NOTED ☐ SUBMIT SPECIFIED ITEM
☐ REJECTED ☐ REVISE AND RESUBMIT

CHECKING IS ONLY TO VERIFY GENERAL CONFORMANCE AND COMPLIANCE WITH THE DESIGN CONCEPT AND CONTRACT DOCUMENTS SUBCONTRACT OR SUPPLIER IS RESPONSIBLE FOR DIMENSIONS, ERRORS AND OMISSIONS IN THESE DRAWINGS OR LIST WHICH THEY SHALL CONFIRM AND CORRELATE AT THE JOBSITE WITH THEIR WORK OR FABRICATION AND WITH THAT OF OTHER TRADES AFFECTED BY THEIR WORK. THEY SHALL BE RESPONSIBLE FOR ANY DEVIATION FROM THE CONTRACT DOCUMENTS OR THESE DRAWINGS OR LIST UNLESS THEY HAVE OBTAINED WRITTEN APPROVAL TO DO SO, AND SHALL BE RESPONSIBLE FOR THE SATISFACTORY COMPLETION OF THEIR WORK.

TEAM CONSTRUCTION, LLC
6701 NE 42nd Street, Vancouver, WA 98661

DATE 01/24/24 BY Josh Clark

(■)NO EXCEPTION TAKEN ( )MAKE CORRECTIONS NOTED
( )REJECTED ( )REVISE AND RESUBMIT
( )SUBMIT SPECIFIED ITEM

THIS REVIEW IS FOR GENERAL COMPILANCE ONLY AND IN NO CASE IS THE CONTRACTOR RELIEVED OF RESPONSIBILITY FOR COMPLIANCE WITH THE CONTRACT DOCUMENTS AND SATISFACTORY COMPLETION OF ALL WORK. ANY ACTION SHOWN IS SUBJECT TO THE REQUIREMENTS OF THE CONTRACT DOCUMENTS. CONTRACTOR SHALL REMAIN RESPONSIBLE FOR DIMENSIONS; FABRICATION PROCESS AND TECHNIQUES OF CONSTRUCTION; COORDINATION OF THIS WORK WITH THAT OF OTHER TRADES AND THE SATISFACTORY PERFORMANCE OF THIS WORK.

SCHMIDT ARCHITECTS, P.C.

DATE: 1-24-2024 BY: Grant Hunter

REMARKS: Reviewed per O.S.S.C. 107.3.4.1 for general conformance w/ design intent

☐ REVIEWED ☒ MAKE CORRECTIONS NOTED ☐ SUBMIT SPECIFIC ITEM
☐ REJECTED ☐ NOT REQUIRED FOR REVIEW ☐ REVISE AND RESUBMIT

THIS REVIEW IS ONLY FOR THE GENERAL CONFORMANCE WITH THE DESIGN CONCEPT OF THE PROJECT AND GENERAL COMPLIANCE WITH THE INFORMATION GIVEN IN THE CONTRACT DOCUMENTS. CORRECTIONS OR COMMENTS MADE ON THE SHOP DRAWINGS DURING THE REVIEW DO NOT RELIEVE CONTRACTOR FROM COMPLIANCE WITH THE REQUIREMENTS OF THE PLANS AND SPECIFICATIONS. REVIEW OF A SPECIFIC ITEM(s) SHALL NOT INCLUDE REVIEW OF AN ASSEMBLY OF WHICH THE ITEM(s) IS A COMPONENT. THE CONTRACTOR IS RESPONSIBLE FOR DIMENSIONS TO BE CONFIRMED AND CORRELATED AT THE JOBSITE; INFORMATION THAT PERTAINS SOLELY TO FABRICATION PROCESS OR TO THE MEANS, METHODS, TECHNIQUES, SEQUENCES, AND PROCEDURE OF CONSTRUCTION; COORDINATION OF THE WORK OF ALL TRADES; AND PERFORMING ALL WORK IN A SAFE AND SATISFACTORY MANNER.

ASSOCIATED CONSULTANTS, INC.
STRUCTURAL ENGINEERS

DATE: 02-27-2024 BY: Satya Tata

☒ REVIEWED ☐ MAKE CORRECTIONS NOTED ☐ SUBMIT SPECIFIC ITEM

☐ REJECTED ☐ NOT REQUIRED FOR REVIEW ☐ REVISE AND RESUBMIT

THIS REVIEW IS ONLY FOR THE GENERAL CONFORMANCE WITH THE DESIGN CONCEPT OF THE PROJECT AND GENERAL COMPLIANCE WITH THE INFORMATION GIVEN IN THE CONTRACT DOCUMENTS. CORRECTIONS OR COMMENTS MADE ON THE SHOP DRAWINGS DURING THE REVIEW DO NOT RELIEVE CONTRACTOR FROM COMPLIANCE WITH THE REQUIREMENTS OF THE PLANS AND SPECIFICATIONS. REVIEW OF A SPECIFIC ITEM(s) SHALL NOT INCLUDE REVIEW OF AN ASSEMBLY OF WHICH THE ITEM(s) IS A COMPONENT. THE CONTRACTOR IS RESPONSIBLE FOR DIMENSIONS TO BE CONFIRMED AND CORRELATED AT THE JOBSITE: INFORMATION THAT PERTAINS SOLELY TO FABRICATION PROCESS OR TO THE MEANS, METHODS, TECHNIQUES, SEQUENCES, AND PROCEDURE OF CONSTRUCTION; COORDINATION OF THE WORK OF ALL TRADES; AND PERFORMING ALL WORK IN A SAFE AND SATISFACTORY MANNER.

ASSOCIATED CONSULTANTS, INC.
STRUCTURAL ENGINEERS

DATE: 05/17/2024 BY: AHMED MOHAMMED

21-101578-DFS-01-CO

CHIPOTLE - MEXICAN GRILL
(STORE #4153)
12035 NE HALSEY STREET
PORTLAND, OREGON

CANOPIES SHOP SUBMITTALS
BY AMERICAN PRODUCTS, INC (API)

DRAWING INDEX

SHEET NO.	SHEET NAME	REVISION/PAGES CHANGED 1	2	3	4	5	6
COVER/SITE SPECIFIC INFORMATION							
A000	COVER PAGE						
A001	FLOOR PLANS (FROM PDF)						
A002	ELEVATIONS (FROM PDF)						
CANOPIES							
A100	CANOPY PERSPECTIVE VIEW	●					
A101	CANOPY A - PLAN, SECT & ELEV	●	●				
A102	CANOPY A - STEEL OUTRIGGERS	●					
A201	CANOPY B - PLAN, SECT & ELEV	●	●				
A202	CANOPY B - STEEL OUTRIGGERS	●	●				

FASTENER SCHEDULE

#	DESCRIPTION	QTY.
1	14-14 x 2 HEX WASHER HEAD TEK 410 SS	
2	#10-16 x 1" HEX - UNSLOTTED DRIVE HWH #3 Pt SDS	
3	12-14 x 1 PN PHIL TEK 410 SS	
4		
A	3/8" SAE GRADE 5 (SAE J428) STEEL THREADED ROD ASSEMBLIES	
B		

NOTES: 1) ALL NUMBERED FASTENERS LISTED ARE SUPPLIED BY API. ALL LETTERED FASTENERS LISTED ARE BY OTHERS. 2) EXPOSED FASTENERS SHALL BE PAINTED. 3) ANCHOR FASTENERS LISTED ARE SUGGESTED GC/INSTALLER SHALL VERIFY ANCHOR REQUIREMENTS.

FINISH SCHEDULE

ASSEMBLY	FINISH
CANOPY	CUSTOM CHARCOAL POWDER COAT

NOTE: POWDER COAT BY API.

AMERICAN PRODUCTS, INC.
13909 LYNMAR BLVD.
TAMPA, FL 33626
PH. (813)925-0144
WWW.AMERICANPRODUCTS.COM
CONTACT: KERRI BEALS

API RECOMMENDS THAT THE NOTE BELOW APPEARS WITH STOREFRONT ELEVATIONS AND SECTION VIEW DETAILS IN YOUR DRAWINGS

STOREFRONT AND RELATED MATERIALS PROVIDED BY AMERICAN PRODUCTS, INC. (API). NO SUBSTITUTIONS WITHOUT WRITTEN CONSENT FROM STORE OWNER/ARCHITECT.
API (813)925-0144

SEAL:

(STORE #4153)
CHIPOTLE - MEXICAN GRILL
12035 NE HALSEY STREET
PORTLAND, OREGON

REV#:	DATE:	DESCRIPTION:
1	01/22/2024	STEEL CONNECTION TYPE
2	03/04/2024	REVIEW COM. (REF. SET)

DRAWING DATE: 01/11/2024
DRAWN BY: ER
PM: TT

CONTENTS: COVER PAGE

SHEET #: A000

JOB #: AAAO17771

GENERAL NOTES

1. ALL DIMENSIONS SHOWN SHALL BE VERIFIED BY CUSTOMER PRIOR TO FABRICATION.
2. REQUEST FOR REVISIONS AFTER AMERICAN PRODUCTS, INC. (API) HAS BEEN RELEASED FOR FABRICATION MAY RESULT IN ADDITIONAL CHARGES FOR ENGINEERING, FABRICATION, HANDLING AND TRANSPORTATION. CHANGES MAY ADVERSELY AFFECT THE SCHEDULE.
3. ANCHOR FASTENERS ARE BY OTHERS

These shop drawings remain the property of American Products, Inc. (API) and contain proprietary, competitive information which if released to any party other than the intended recipient, could cause an undetermined amount of harm to American Products, Inc. (API). Any reproduction and distribution of said drawings without the express written consent of American Products, Inc. (API) is strictly prohibited. Any charge for shop drawings, paid or owed by the intended recipient to American Products, Inc. (API) is considered a rental charge for the right to utilize said drawings in order to conduct business with American Products, Inc. (API)

ABBREVIATIONS

VIF = VERIFY IN FIELD
FS = FRAME SIZE
DLO = DAY LIGHT OPENING
DO = DOOR OPENING
TYP = TYPICAL
RO = ROUGH OPENING
F.F = FINISHED FLOOR
A.F.F= ABOVE FINISHED FLOOR
BM = BENCHMARK

CS = CAP SCREW
FH = FLAT HEAD
FN = FINISHED NUT
FW = FLAT WASHER
FUH = FLAT UNDERCUT HEAD
HWH = HEX WASHER HEAD
MTH = MODIFIED TRUSS HEAD
OA = OVERALL
PD = PHILLIPS DRIVE

SDS = SELF-DRILLING SCREW
SMS = SHEET METAL SCREW
TBD = TO BE DETERMINED
TCS = THREAD CUTTING SCREW
UON = UNLESS OTHERWISE NOTED

City of Portland
Reviewed for Code Compliance
Date: 05/12/24
Permit #:
21-101578-DFS-01-CO

SYMBOLS

NORTH ARROW
CUT LINE MARKER
FASTENER NUMBER
DETAIL CALL OUT
SECTION MARKER
ALIGN MARKER
LEVEL TARGET
ACM TAG
REVISION NUMBER
NAME TYPE SCALE

CANOPY NOTES

1: COLOR: **API CUSTOM CHARCOAL POWDER COAT**
2: CONTRACTOR TO CONFIRM ALL CANOPY DIMENSIONS.
3: COORDINATE STEEL LOCATIONS SHOWN HEREIN WITH STEEL SHOP DRAWINGS
4: EXCLUDES ALL WALL FASTENERS
5: CONTRACTOR TO ENSURE UPPER BRACKET ASSEMBLY INSTALLED PLUMB, SQUARE, LEVEL AND IN ALIGNMENT PRIOR TO INSTALLATION OF ALUMINUM CANOPY
6: CONTRACTOR TO ENSURE CANOPY ASSEMBLY PROPERLY SUPPORTED DURING HOISTING AND INSTALLATION
7: REQUEST FOR REVISIONS AFTER AMERICAN PRODUCTS, INC (API) HAS BEEN RELEASED FOR FABRICATION MAY RESULT IN ADDITIONAL CHARGES FOR ENGINEERING, FABRICATION,HANDLING AND TRANSPORTATION. CHANGES MAY AVERSELY AFFECT THE SCHEDULE.

PRODUCT LOCATION PLAN

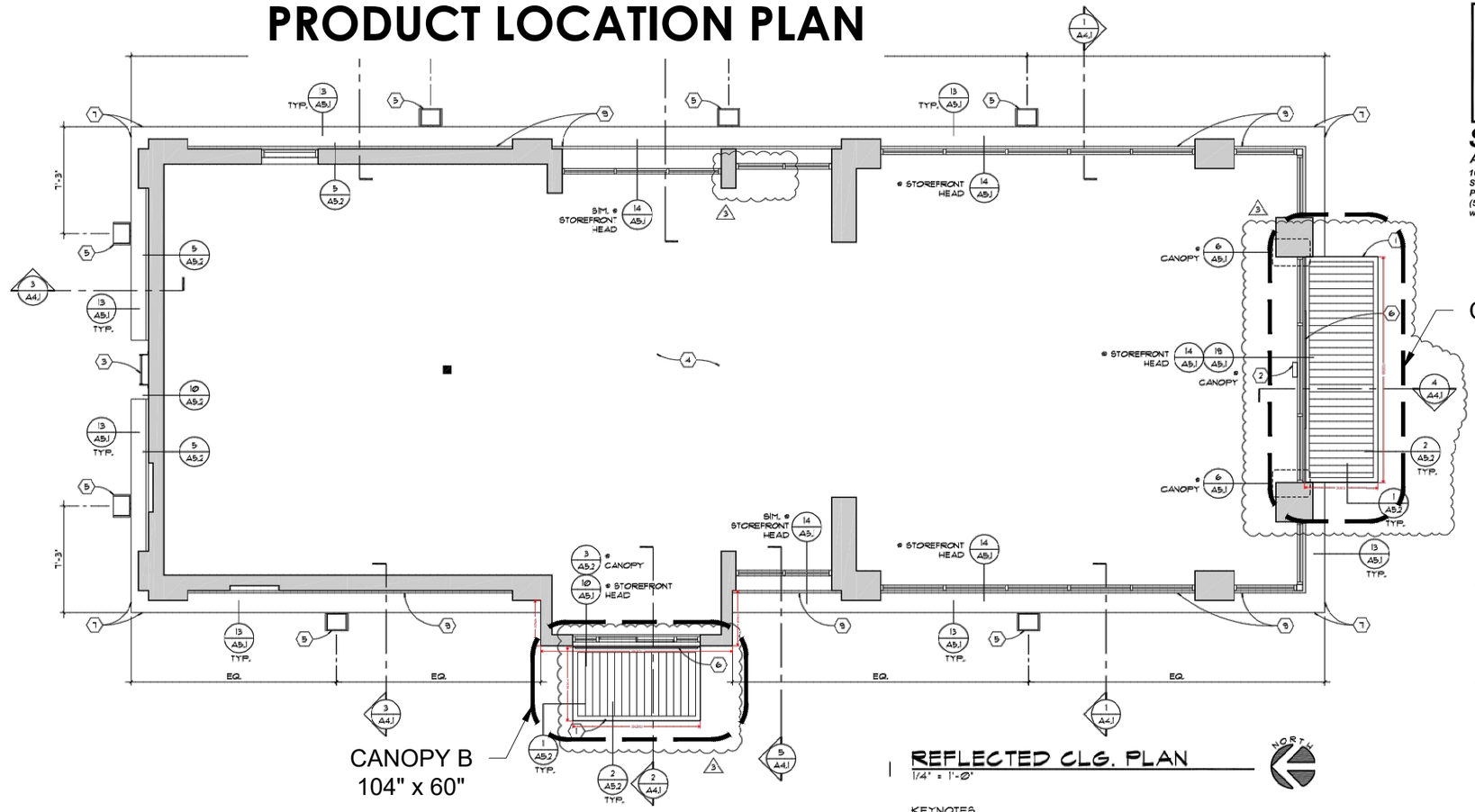

FOR REFERENCE ONLY

1 REFLECTED CLG. PLAN

1/4" = 1'-0"

KEYNOTES

1. PROFILE OF PRE-FINISHED 6" ALUM. CANOPY W/ STEEL OUTRIGGERS BY 'API' TO MATCH STOREFRONT.
2. EXIT SIGN CENTERED OVER DRS.- SEE ELEC. DWGS.
3. PAINTED ROOF LADDER W/ SECURITY GATE- SEE 3/A2.2
4. OPEN TO ROOF STRUCTURE ABOVE
5. (LT-1) WALL PACK LIGHT FIXTURE @ 111'-4" A.F.F.- SEE ELEC. DWGS.
6. (LT-2) SURFACE MOUNTED FLEX STRIP LIGHT @ CANOPY CHANNEL - SEE ELEC. DWGS.
7. PROFILE OF OVERHANG SOFFIT ABOVE
8. 2" CONTINUOUS SOFFIT VENT

LIGHTING LEGEND

MARK	MANUFACTURER	COLOR	REMARKS
LT-1	CREE 'XSPW-B-WM-2ME-4L-57K-UL-BZ'	BRONZE FINISH	LED WALL PACK @ 111'-4" A.F.F.
LT-2	PARADIGM 'LED-AMC-2410-5-0-EC'	ANNODIZED ALUMINUM	LED FLEX STRIP LIGHT W/ OPAL LENS & END CAPS

SCHMIDT ARCHITECTS, P.C.
16101 SW 72ND AVENUE
SUITE 135
PORTLAND, OR 97224
(503) 220-8517
www.schmidtarchitectspc.com

HALSEY 'QSR' REMODEL
12035 NE HALSEY STREET
MAJ DEVELOPMENT

PROJECT NO.
2021-133
DATE : 10-01-2021
DRAWN BY : GAH
CHECKED BY : RMS

REVISIONS
PERMIT SET
3 JUNE XX, 2023 TENANT COMMENTS

2021-133-A2.3.dwg

A2.3

AMERICAN PRODUCTS, INC.
13909 LYNMAR BLVD.
TAMPA, FL 33626
PH. (813)925-0144
WWW.AMERICANPRODUCTS.COM
CONTACT: KERRI BEALS

API RECOMMENDS THAT THE NOTE BELOW APPEARS WITH STOREFRONT ELEVATIONS AND SECTION VIEW DETAILS IN YOUR DRAWINGS

STOREFRONT AND RELATED MATERIALS PROVIDED BY AMERICAN PRODUCTS, INC. (API). NO SUBSTITUTIONS WITHOUT WRITTEN CONSENT FROM STORE OWNER/ARCHITECT. API (813)925-0144

SEAL:

(STORE #4153)
CHIPOTLE - MEXICAN GRILL
12035 NE HALSEY STREET
PORTLAND, OREGON

REV#:	DATE:	DESCRIPTION:
1	01/22/2024	STEEL CONNECTION TYPE
2	03/04/2024	REVIEW COM. (REF. SET)
-	-	-
-	-	-
-	-	-
-	-	-

DRAWING DATE: 01/11/2024
DRAWN BY: ER
PM: TT

CONTENTS:
LOCATION FLOOR PLAN

SHEET #:
A001

JOB #: AAAO17771

1 A001 **CANTILEVERED CANOPY**
ROOF PLAN
SCALE: N.T.S.

PRODUCT LOCATION ELEVATIONS

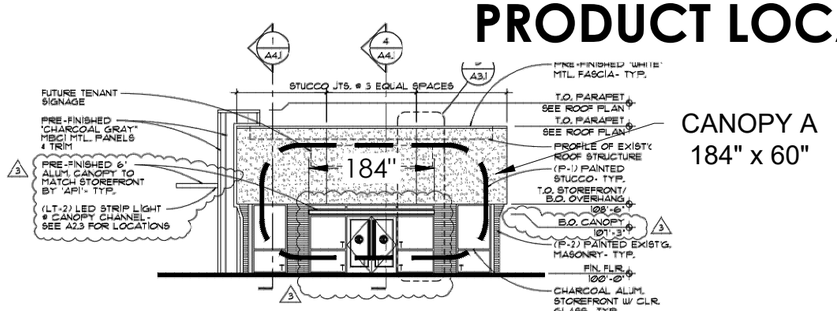

CANOPY A
184" x 60"

1 SOUTH ELEVATION
1/8" = 1'-0"
T = TEMPERED GLASS

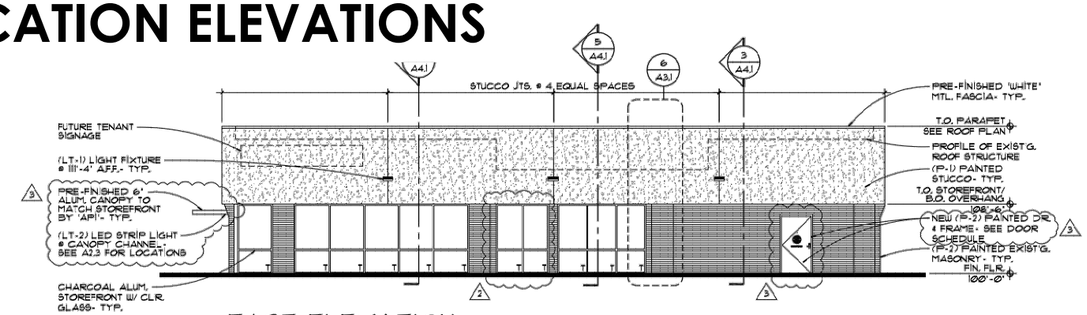

2 EAST ELEVATION
1/8" = 1'-0"
T = TEMPERED GLASS

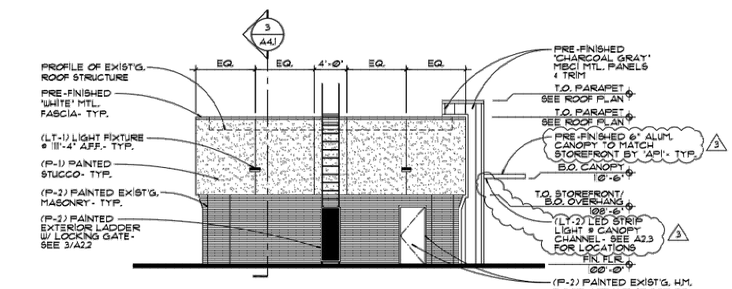

3 NORTH ELEVATION
1/8" = 1'-0"

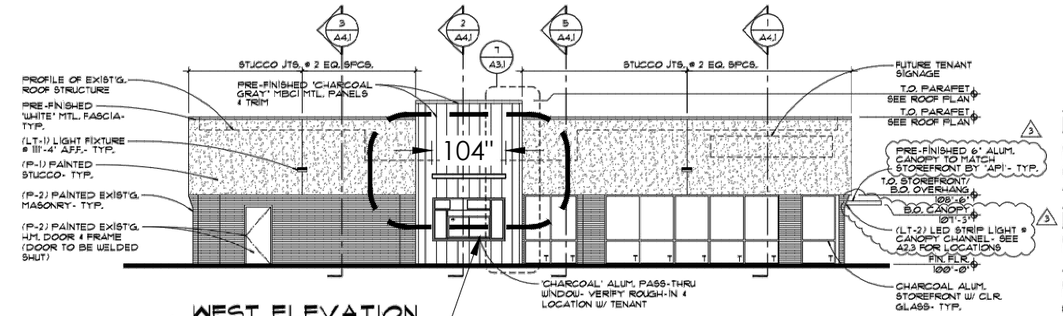

CANOPY B
104" x 60"

4 WEST ELEVATION
1/8" = 1'-0"
T = TEMPERED GLASS

FOR REFERENCE ONLY

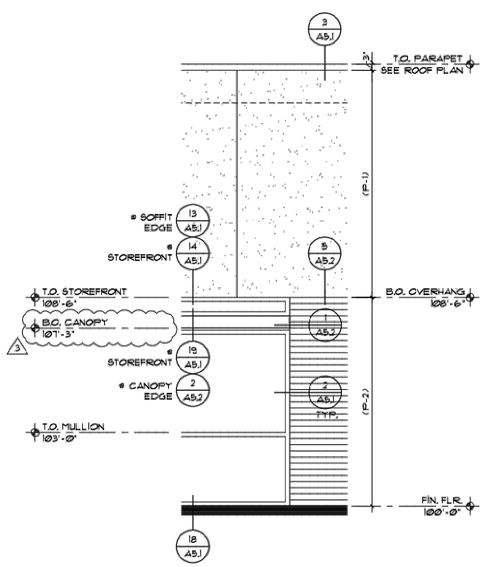

5 ENLARGED ELEVATION
3/8" = 1'-0"

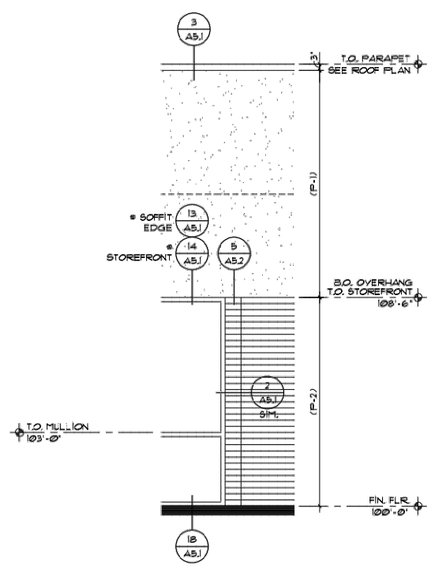

6 ENLARGED ELEVATION
3/8" = 1'-0"

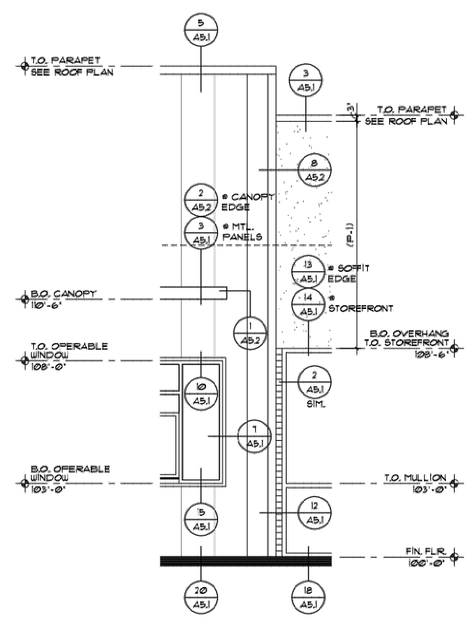

7 ENLARGED ELEVATION
3/8" = 1'-0"

COLOR/ MATERIAL LEGEND			
MARK	MANUFACTURER	COLOR	REMARKS
P-1	PPG	PPG1010-2 'FOG'	STUCCO
P-2	PPG	PPG1001-6 'KNIGHT'S ARMOR'	EXIST'G. MASONRY & H.M. DRS./FRAMES
M-1	MUTUAL MATERIALS 8" HI CMU, SPLIT FACE	P-2	TRASH ENCLOSURE

NOTES:
1. ALL GLASS PANELS ARE CLEAR U.N.O.
2. CONFIRM ALL COLORS WITH ARCHITECT PRIOR TO INSTALLATION

SCHMIDT ARCHITECTS, P.C.
16101 SW 72ND AVENUE
SUITE 135
PORTLAND, OR 97224
(503) 220-8517
www.schmidtarchitectspc.com

HALSEY 'QSR' REMODEL
12035 NE HALSEY STREET
MAJ DEVELOPMENT

API
AMERICAN PRODUCTS, INC.
13909 LYNMAR BLVD.
TAMPA, FL 33626
PH. (813)925-0144
WWW.AMERICANPRODUCTS.COM
CONTACT: KERRI BEALS

API RECOMMENDS THAT THE NOTE BELOW APPEARS WITH STOREFRONT ELEVATIONS AND SECTION VIEW DETAILS IN YOUR DRAWINGS

STOREFRONT AND RELATED MATERIALS PROVIDED BY AMERICAN PRODUCTS, INC. (API). NO SUBSTITUTIONS WITHOUT WRITTEN CONSENT FROM STORE OWNER/ARCHITECT. API (813)925-0144

SEAL:

(STORE #4153)
CHIPOTLE - MEXICAN GRILL
12035 NE HALSEY STREET
PORTLAND, OREGON

PROJECT NO.
2021-133
DATE: 10-01-2021
DRAWN BY: GAH
CHECKED BY: RMS

REVISIONS
PERMIT SET
3 JUNE XX, 2023 TENANT COMMENTS

2021-133-A3.1.dwg

REV#:	DATE:	DESCRIPTION:
1	01/22/2024	STEEL CONNECTION TYPE
2	03/04/2024	REVIEW COM. (REF. SET)
-	-	-
-	-	-
-	-	-
-	-	-

DRAWING DATE: 01/11/2024
DRAWN BY: ER
PM: TT

CONTENTS:
LOCATION ELEVATION

SHEET #:
A002

A3.1

JOB #: AAAO17771

1 A002 **CANTILEVERED CANOPY**
ELEVATIONS
SCALE: N.T.S.

CHIPOTLE CANTILEVERED CANOPY SYSTEM

(TYPICAL AT ENTRY AND DRIVE THRU)

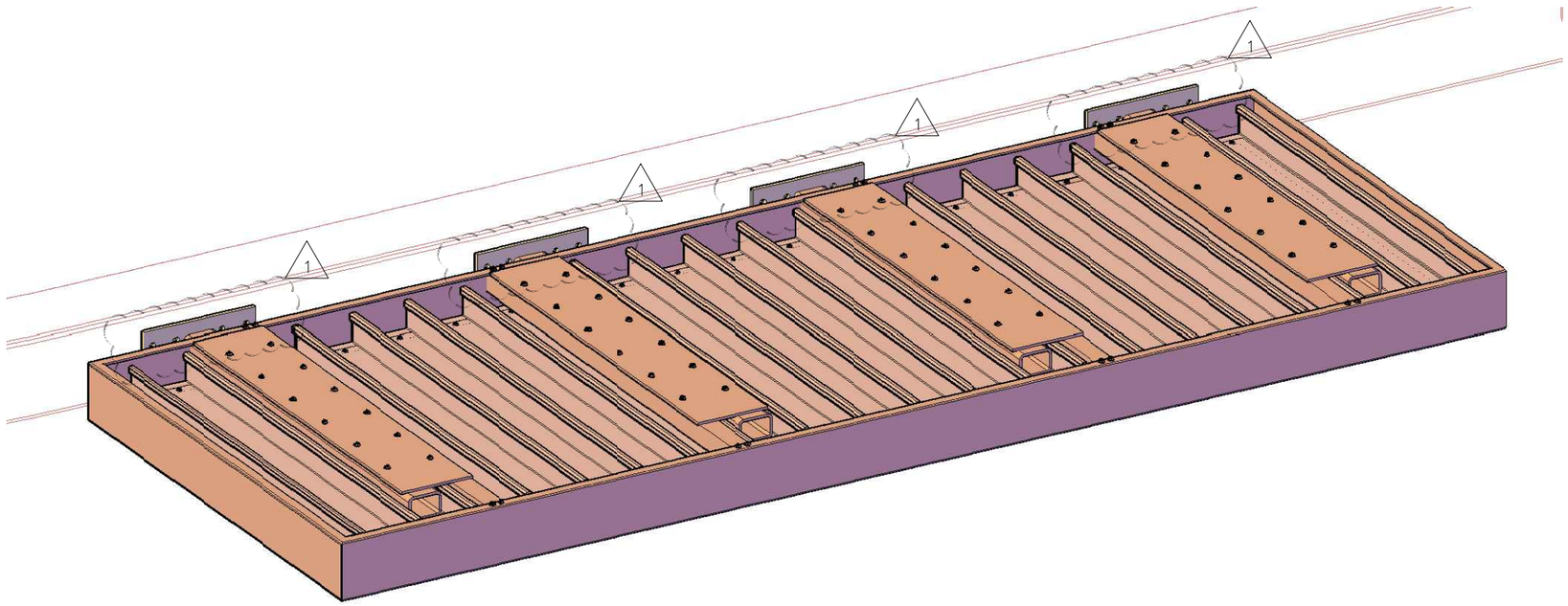

PERSPECTIVE VIEW OF TOP OF
STANDARD SUSPENDED CANOPY

(SCUPPER LOCATIONS NOT SHOWN IN PERSPECTIVE VIEW)

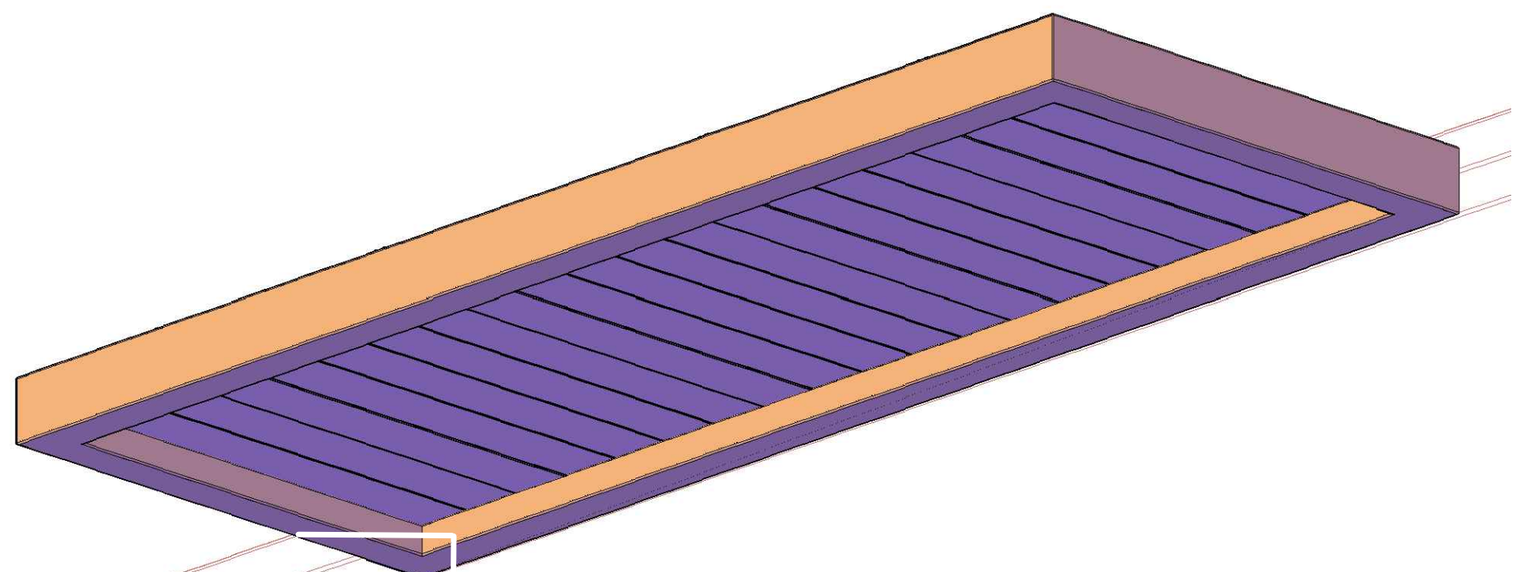

PERSPECTIVE VIEW OF BOTTOM OF
STANDARD CANTILEVERED CANOPY

TYPE: CANTILEVERED CANOPY SYSTEM

- **FULLY ASSEMBLED BY API AND SHIPPED TO SITE FOR EASY INSTALL**
- **STEEL OUTRIGGERS SUPPLIED BY API OR INSTALLER/CONTRACTOR PER ORDER**
- **STEEL OUTRIGGERS INSTALLED SEPARATELY AND ATTACHED TO BUILDING HORIZONTAL HSS BY INSTALLER/CONTRACTOR**
- **CANOPY LIFTED INTO PLACE, USING API PROVIDED ATTACHMENT PLATES TO MECHANICALLY ATTACH TO STEEL OUTRIGGERS**

CUSTOM CHARCOAL POWDER COAT FINISH

1 / A100 **CANTILEVERED CANOPY**
3D PERSPECTIVE SCALE: N.T.S.

City of Portland
Reviewed for Code Compliance
Date: 06/12/24
Permit #:
21-101578-DFS-01-CO

API
AMERICAN PRODUCTS, INC.
13909 LYNMAR BLVD.
TAMPA, FL 33626
PH. (813)925-0144
WWW.AMERICANPRODUCTS.COM
CONTACT: KERRI BEALS

API RECOMMENDS THAT THE NOTE BELOW APPEARS WITH STOREFRONT ELEVATIONS AND SECTION VIEW DETAILS IN YOUR DRAWINGS

STOREFRONT AND RELATED MATERIALS PROVIDED BY AMERICAN PRODUCTS, INC. (API). NO SUBSTITUTIONS WITHOUT WRITTEN CONSENT FROM STORE OWNER/ARCHITECT.
API (813)925-0144

SEAL:

(STORE #4153)
CHIPOTLE - MEXICAN GRILL
12035 NE HALSEY STREET
PORTLAND, OREGON

REV#:	DATE:	DESCRIPTION:
1	01/22/2024	STEEL CONNECTION TYPE
2	03/04/2024	REVIEW COM. (REF. SET)
-	-	-
-	-	-
-	-	-
-	-	-

DRAWING DATE: 01/11/2024
DRAWN BY: ER
PM: TT

CONTENTS:
CANOPY PERPSECTIVE

SHEET #:
A100

JOB #: AAAO17771

CHIPOTLE CANTILEVERED CANOPY A

CANOPY LIFTED INTO PLACE AND SECURED TO INDIVIDUAL 3"x 3" STEEL OUTRIGGERS (OUTRIGGERS SUPPLIED BY API OR BY OTHERS)
VIA API'S 1/4"x 7" ATTACHMENT PLATES WITH API PROVIDED #1 FASTENERS (REFER TO FASTENER SCHEDULE ON COVER)

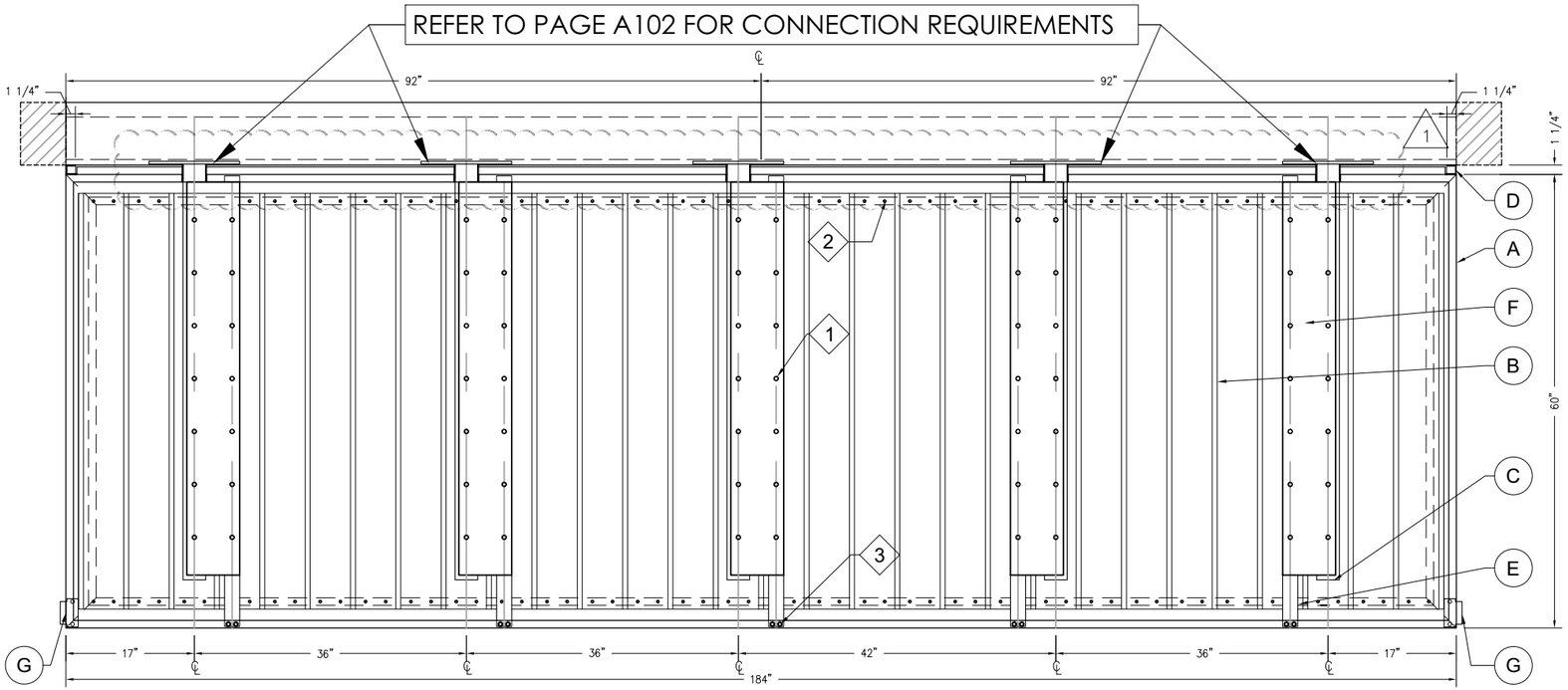

QTY: 1

TYPE: CANTILEVERED CANOPY WITH G-GUTTER AND EXTRUDED DECK

A. FRAME: 4"x 6" 5052-H32 ALUMINUM ALLOY G-GUTTER CUSTOM P.C.
B. DECK: 3"x 6"x 1/16" 5052-H32 ALUM. ALLLOY MATING PANS, CUSTOM P.C.
C. OUTRIGGERS: HSS 3"x 3"x 3/8" STEEL WELDED TO 5"x 12" A36 STEEL PLATE , PRIMER
D. LIGHT CHANNEL: 1 1/4" ALUM CHANNEL, CUSTOM POWDER COAT
E. STIFFENER TUBE: RT2"x 2"x 1/4" 6063-T6 ALUM. ALLOY, CUSTOM P.C.
F. ATTACHMENT PLATE: 1/4"x 7"x 18" 6061-T651 ALUM ALLOY ATTACH. PLATE
G. WATER ACCESSORIES: (2) SCUPPERS - NOTE STANDARD LOCATION
HARDWARE: (SEE FASTENER SCHEDULE ON COVER PAGE)

ALSO INCLUDED
MISC: TOUCH UP PAINT KIT BY API

1 A101 **CANTILEVERED CANOPY (A)**
PLAN SCALE: 77/128" = 1'-0"

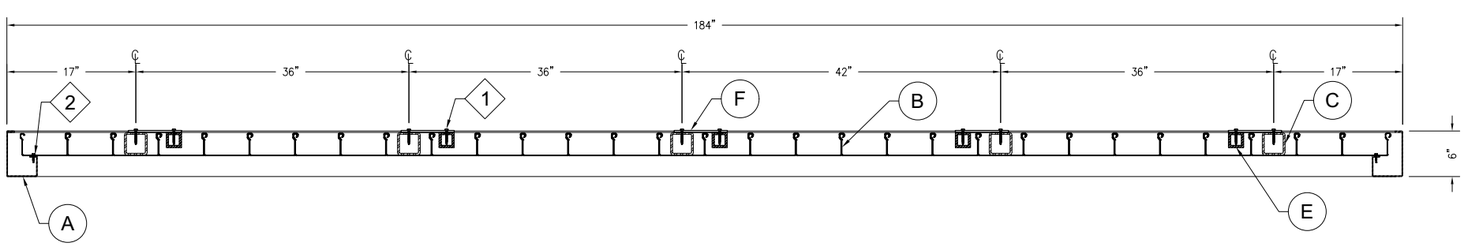

FLASH AND WATER PROOF CONNECTION
AS NEEDED BY OTHERS

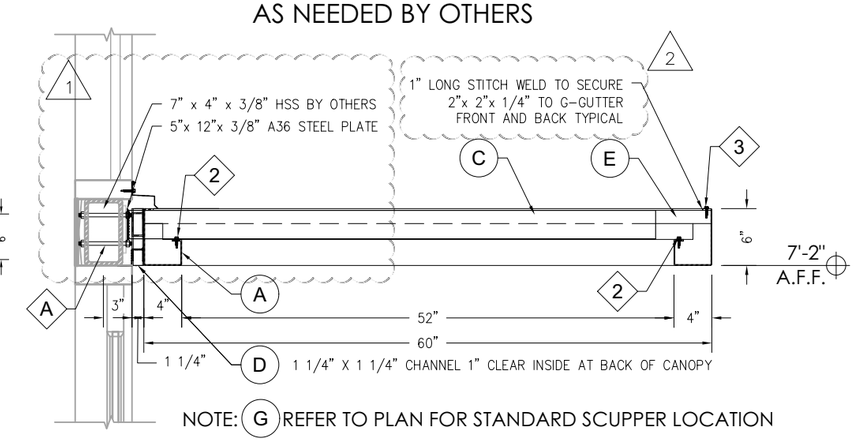

NOTE: G REFER TO PLAN FOR STANDARD SCUPPER LOCATION

2 A101 **CANTILEVERED CANOPY (A)**
SECTIONS SCALE: 3/4" = 1'-0"

City of Portland
Reviewed for Code Compliance
Date: 06/12/24
Permit #:
~~21-101578-DFS-01-CO~~

AMERICAN PRODUCTS, INC.
13909 LYNMAR BLVD.
TAMPA, FL 33626
PH. (813)925-0144
WWW.AMERICANPRODUCTS.COM
CONTACT: KERRI BEALS

API RECOMMENDS THAT THE NOTE BELOW APPEARS WITH STOREFRONT ELEVATIONS AND SECTION VIEW DETAILS IN YOUR DRAWINGS

STOREFRONT AND RELATED MATERIALS PROVIDED BY AMERICAN PRODUCTS, INC. (API). NO SUBSTITUTIONS WITHOUT WRITTEN CONSENT FROM STORE OWNER/ARCHITECT. API (813)925-0144

SEAL:

(STORE #4153)
CHIPOTLE - MEXICAN GRILL
12035 NE HALSEY STREET
PORTLAND, OREGON

REV#:	DATE:	DESCRIPTION:
1	01/22/2024	STEEL CONNECTION TYPE
2	03/04/2024	REVIEW COM. (REF. SET)
-	-	-
-	-	-
-	-	-
-	-	-

DRAWING DATE: 01/11/2024
DRAWN BY: ER
PM: TT

CONTENTS:
(A) PLAN-SECTIONS CANTILEVERED

SHEET #:
A101

JOB #: AAAO17771

CANOPY A STEEL OUTRIGGER LAYOUT

STEEL OUTRIGGERS SUPPLIED BY (API OR OTHERS) ATTACHED TO BUILDING
HORIZONTAL HSS USING 1/4"-3/16" CONTINUOUS WELD PER LAYOUT

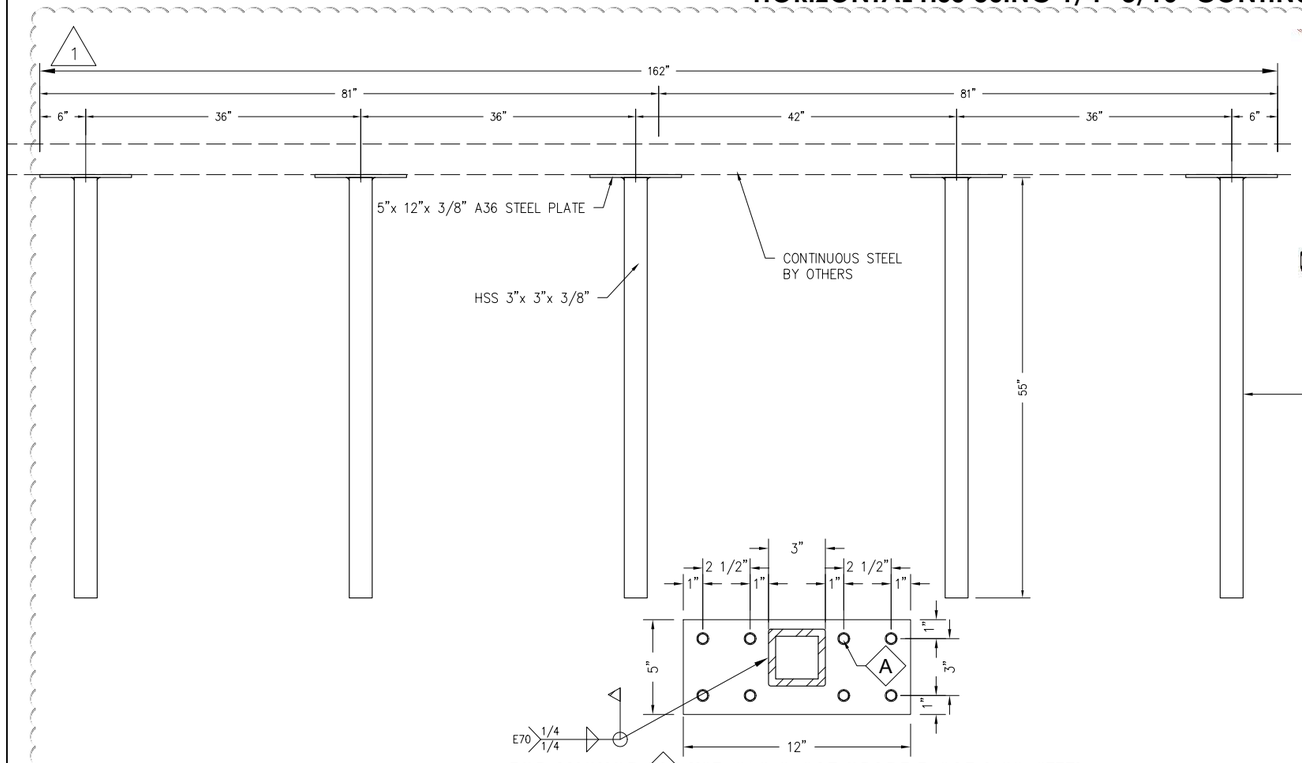

FOR ANCHOR (A) USE (8) 3/8" SAE GRADE 5 (SAE J429) STEEL THREADED ROD ASSEMBLIES CONSISTING OF THREADED ROD FINISH NUT, WASHER ON EACH SIDE AND LOCK WASHER CANOPY SIDE

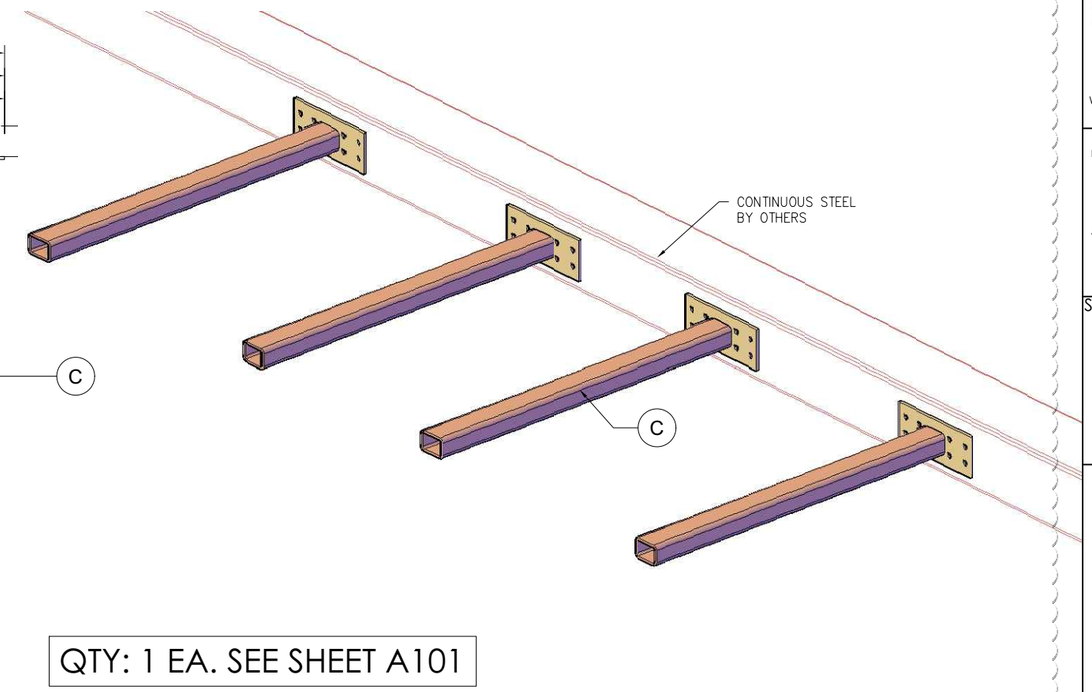

QTY: 1 EA. SEE SHEET A101

TYPE: STEEL OUTRIGGER
C. OUTRIGGERS: HSS 3"x 3"x 3/8" STEEL WELDED TO 5"x 12" A36 STEEL PLATE , PRIMER

1 A101 CANTILEVERED CANOPY (A) - STEEL OUTRIGGERS

PLAN SCALE: 155/256" = 1'-0"

FOR ANCHOR (A) USE (8) 3/8" SAE GRADE 5 (SAE J429) STEEL THREADED ROD ASSEMBLIES CONSISTING OF THREADED ROD FINISH NUT, WASHER ON EACH SIDE AND LOCK WASHER CANOPY SIDE

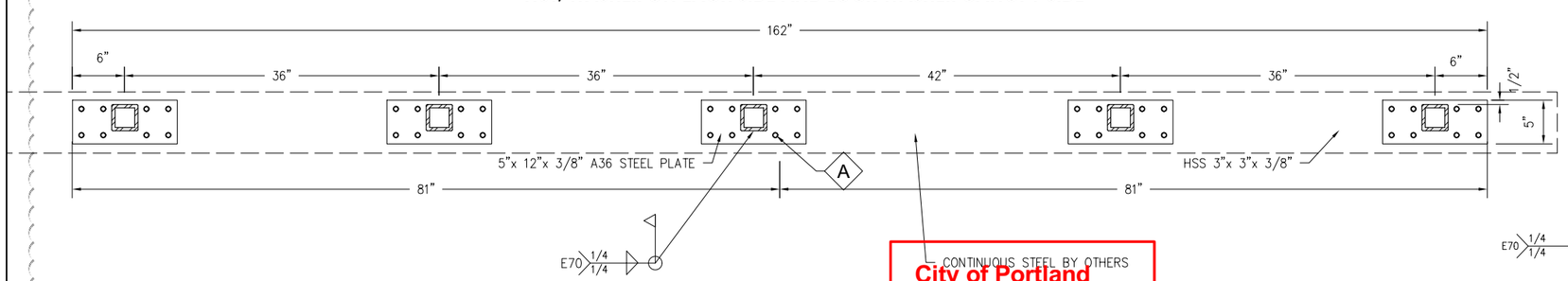

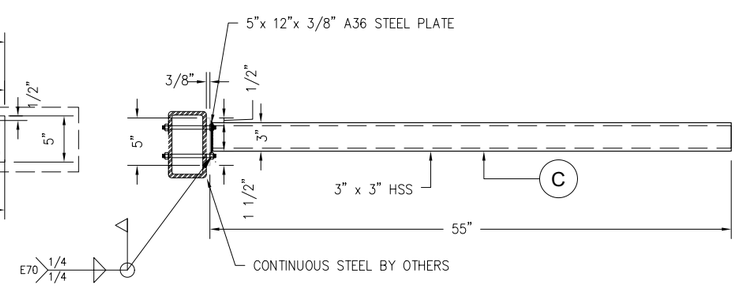

City of Portland
Reviewed for Code Compliance
Date: 06/12/24
Permit #:
21-101578-DFS-01-CO

2 A102 CANTILEVERED CANOPY (A) - STEEL OUTRIGGERS

SECTIONS SCALE: 3/4" = 1'-0"

API
AMERICAN PRODUCTS, INC.
13909 LYNMAR BLVD.
TAMPA, FL 33626
PH. (813)925-0144
WWW.AMERICANPRODUCTS.COM
CONTACT: KERRI BEALS

API RECOMMENDS THAT THE NOTE BELOW APPEARS WITH STOREFRONT ELEVATIONS AND SECTION VIEW DETAILS IN YOUR DRAWINGS

STOREFRONT AND RELATED MATERIALS PROVIDED BY AMERICAN PRODUCTS, INC. (API). NO SUBSTITUTIONS WITHOUT WRITTEN CONSENT FROM STORE OWNER/ARCHITECT. API (813)925-0144

SEAL:

(STORE #4153)
CHIPOTLE - MEXICAN GRILL
12035 NE HALSEY STREET
PORTLAND, OREGON

REV#:	DATE:	DESCRIPTION:
1	01/22/2024	STEEL CONNECTION TYPE
2	03/04/2024	REVIEW COM. (REF. SET)
-	-	-
-	-	-
-	-	-
-	-	-

DRAWING DATE: 01/11/2024
DRAWN BY: ER
PM: TT

CONTENTS:
(A) PLAN-SECTIONS CANTILEVERED

SHEET #:
A102

JOB #: AAAO17771

CHIPOTLE CANTILEVERED CANOPY B

CANOPY LIFTED INTO PLACE AND SECURED TO INDIVIDUAL 3"x 3" STEEL OUTRIGGERS (OUTRIGGERS SUPPLIED BY API OR BY OTHERS)
VIA API'S 1/4"x 7" ATTACHMENT PLATES WITH API PROVIDED #1 FASTENERS (REFER TO FASTENER SCHEDULE ON COVER)

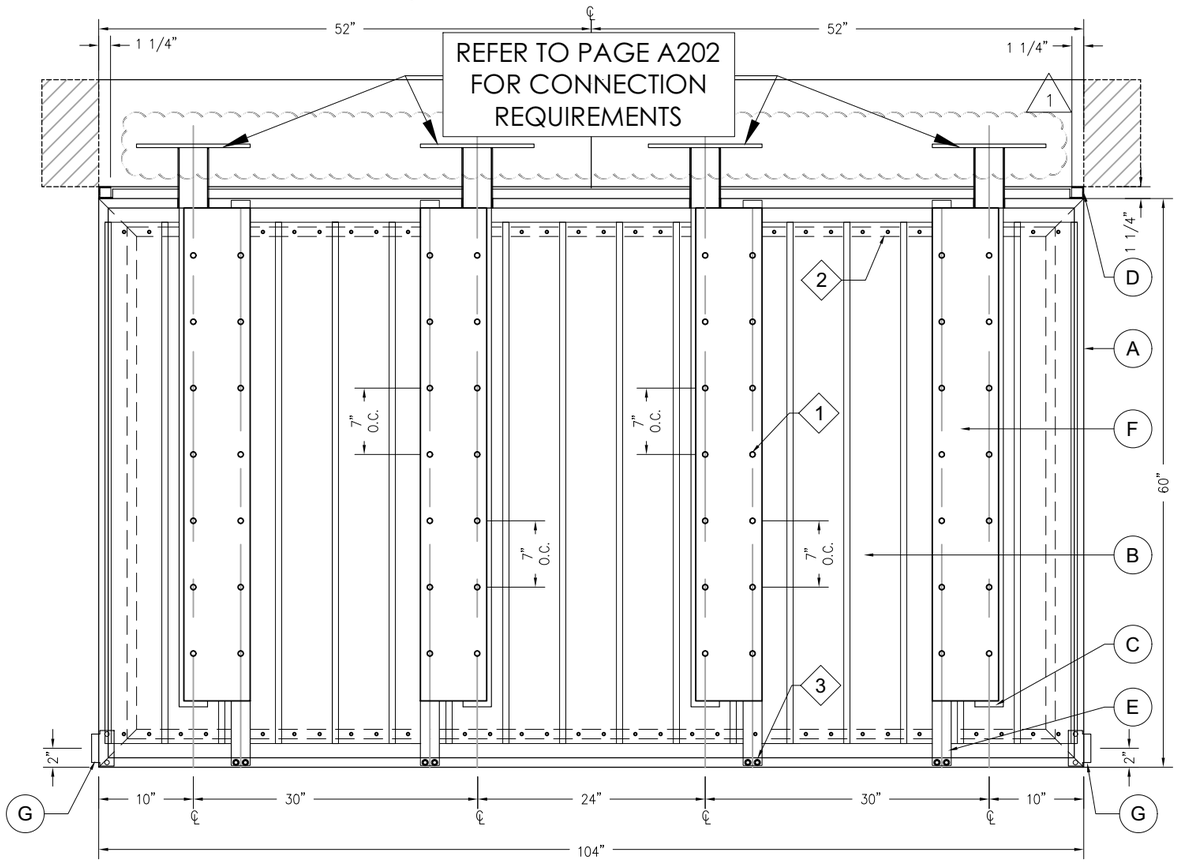

1 A201 **CANTILEVERED CANOPY (B)**
PLAN SCALE: 3/4" = 1'-0"

QTY: 1

TYPE: CANTILEVERED CANOPY WITH G-GUTTER AND EXTRUDED DECK

A. FRAME: 4"x 6" 5052-H32 ALUMINUM ALLOY G-GUTTER CUSTOM P.C.
B. DECK: 3"x 6"x 1/16" 5052-H32 ALUM. ALLLOY MATING PANS, CUSTOM P.C.
C. OUTRIGGERS: HSS 3"x 3"x 3/8" STEEL WELDED TO 5"x 12" A36 STEEL PLATE , PRIMER
D. LIGHT CHANNEL: 1 1/4" ALUM CHANNEL, CUSTOM POWDER COAT
E. STIFFENER TUBE: RT2"x 2"x 1/4" 6063-T6 ALUM. ALLOY, CUSTOM P.C.
F. ATTACHMENT PLATE: 1/4"x 7"x 18" 6061-T651 ALUM ALLOY ATTACH. PLATE
G. WATER ACCESSORIES: (2) SCUPPERS - NOTE STANDARD LOCATION
HARDWARE: (SEE FASTENER SCHEDULE ON COVER PAGE) 2

ALSO INCLUDED
MISC: TOUCH UP PAINT KIT BY API

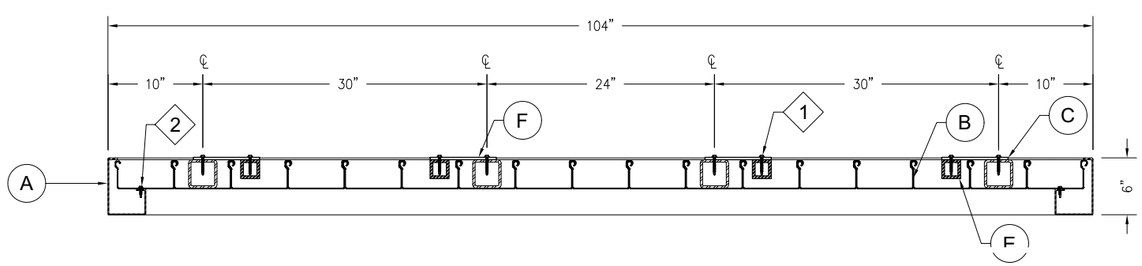

2 A201 **CANTILEVERED CANOPY (B)**
SECTIONS SCALE: 3/4" = 1'-0"

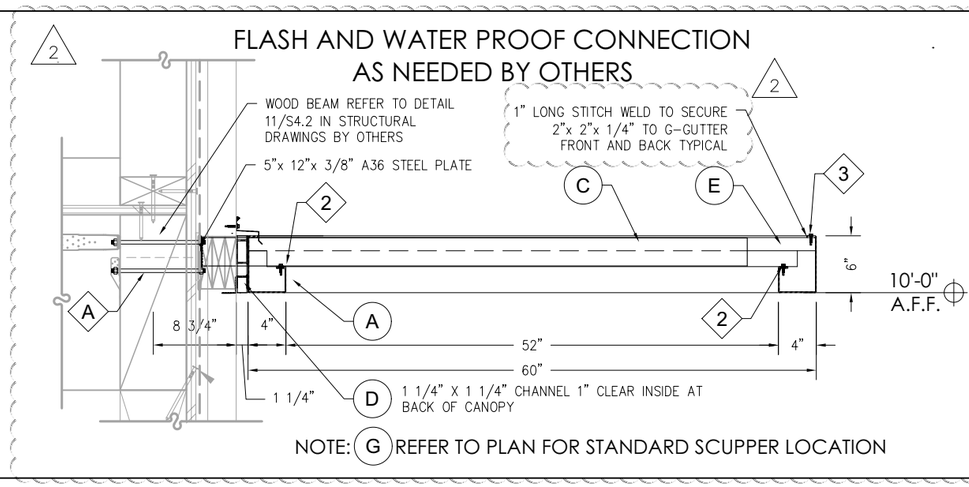

City of Portland
Reviewed for Code Compliance
Date: 06/12/24
Permit #:
21-101578-DFS-01-CO

AMERICAN PRODUCTS, INC.
13909 LYNMAR BLVD.
TAMPA, FL 33626
PH. (813)925-0144
WWW.AMERICANPRODUCTS.COM
CONTACT: KERRI BEALS

API RECOMMENDS THAT THE NOTE BELOW APPEARS WITH STOREFRONT ELEVATIONS AND SECTION VIEW DETAILS IN YOUR DRAWINGS

STOREFRONT AND RELATED MATERIALS PROVIDED BY AMERICAN PRODUCTS, INC. (API). NO SUBSTITUTIONS WITHOUT WRITTEN CONSENT FROM STORE OWNER/ARCHITECT. API (813)925-0144

SEAL:

(STORE #4153)
CHIPOTLE - MEXICAN GRILL
12035 NE HALSEY STREET
PORTLAND, OREGON

REV#:	DATE:	DESCRIPTION:
1	01/22/2024	STEEL CONNECTION TYPE
2	03/04/2024	REVIEW COM. (REF. SET)
-	-	-
-	-	-
-	-	-
-	-	-

DRAWING DATE: 01/11/2024
DRAWN BY: ER
PM: TT

CONTENTS:
(B) PLAN-SECTIONS CANTILEVERED

SHEET #:
A201

JOB #: AAAO17771

CANOPY B STEEL OUTRIGGER LAYOUT

STEEL OUTRIGGERS SUPPLIED BY (API OR OTHERS) ATTACHED TO BUILDING
HORIZONTAL HSS USING 1/4"-3/16" CONTINUOUS WELD PER LAYOUT

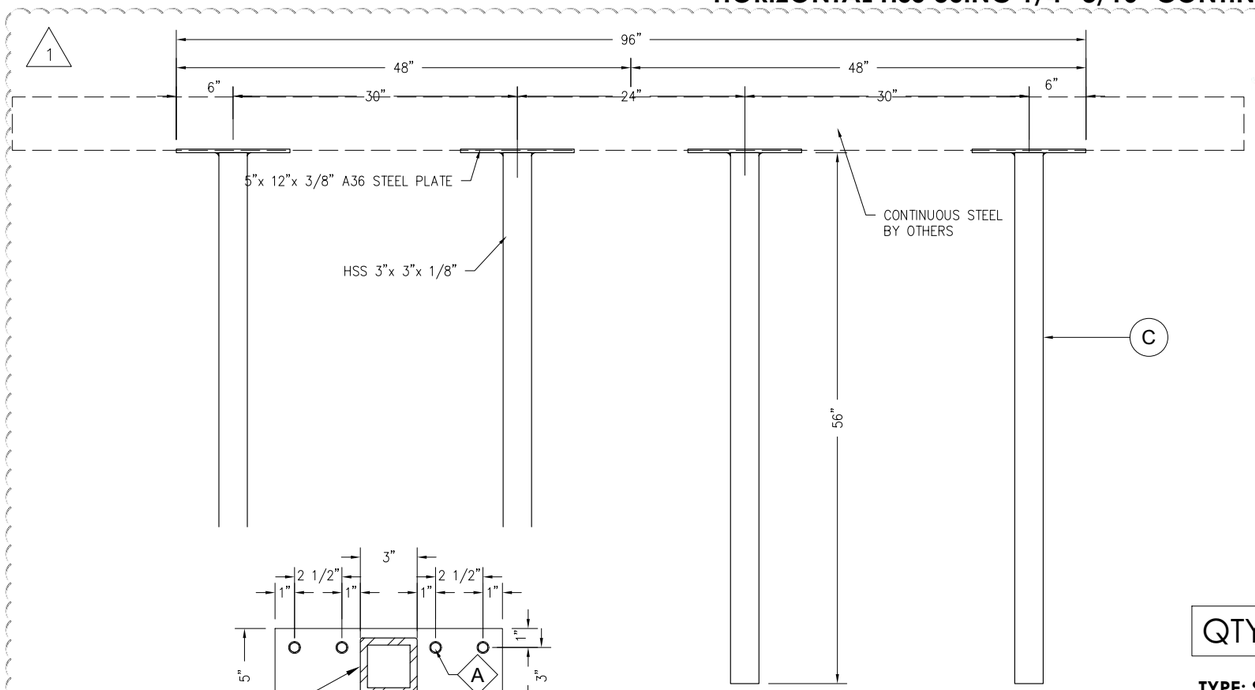

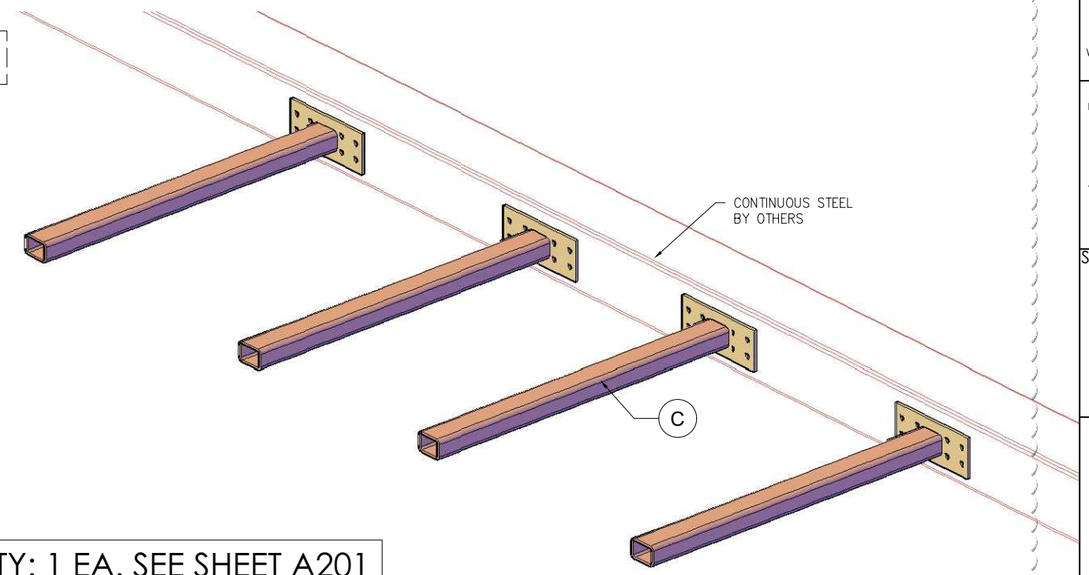

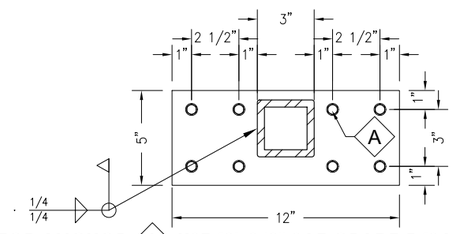

FOR ANCHOR (A) USE (8) 3/8" SAE GRADE 5 (SAE J429) STEEL THREADED ROD ASSEMBLIES CONSISTING OF THREADED ROD FINISH NUT, WASHER ON EACH SIDE AND LOCK WASHER CANOPY SIDE

QTY: 1 EA. SEE SHEET A201

TYPE: STEEL OUTRIGGER

C. OUTRIGGERS: HSS 3"x 3"x 3/8" STEEL WELDED TO 5"x 12" A36 STEEL PLATE , PRIMER

1 A101 CANTILEVERED CANOPY (B) - STEEL OUTRIGGERS

PLAN — SCALE: 3/4" = 1'-0"

FOR ANCHOR (A) USE (8) 3/8" SAE GRADE 5 (SAE J429) STEEL THREADED ROD ASSEMBLIES CONSISTING OF THREADED ROD FINISH NUT, WASHER ON EACH SIDE AND LOCK WASHER CANOPY SIDE

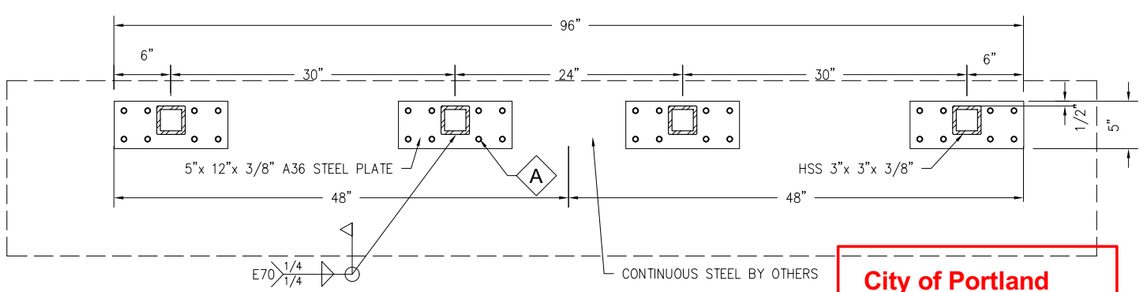

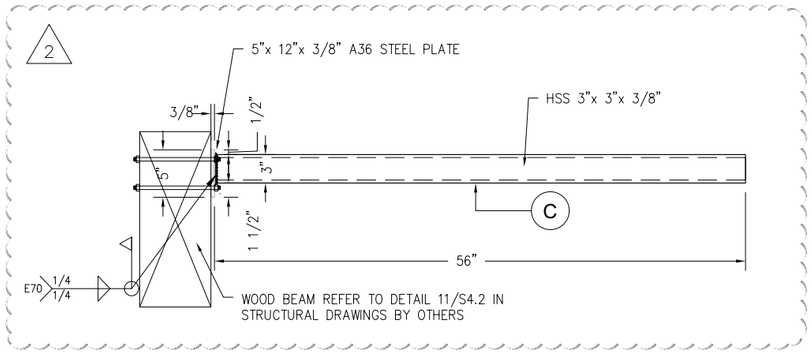

City of Portland
Reviewed for Code Compliance
Date: 06/12/24
Permit #: 21-101578-DFS-01-CO

2 A202 CANTILEVERED CANOPY (B) - STEEL OUTRIGGERS

SECTIONS — SCALE: 3/4" = 1'-0"

API
AMERICAN PRODUCTS, INC.
13909 LYNMAR BLVD.
TAMPA, FL 33626
PH. (813)925-0144
WWW.AMERICANPRODUCTS.COM
CONTACT: KERRI BEALS

API RECOMMENDS THAT THE NOTE BELOW APPEARS WITH STOREFRONT ELEVATIONS AND SECTION VIEW DETAILS IN YOUR DRAWINGS

STOREFRONT AND RELATED MATERIALS PROVIDED BY AMERICAN PRODUCTS, INC. (API). NO SUBSTITUTIONS WITHOUT WRITTEN CONSENT FROM STORE OWNER/ARCHITECT. API (813)925-0144

SEAL:

(STORE #4153)
CHIPOTLE - MEXICAN GRILL
12035 NE HALSEY STREET
PORTLAND, OREGON

REV#:	DATE:	DESCRIPTION:
1	01/22/2024	STEEL CONNECTION TYPE
2	03/04/2024	REVIEW COM. (REF. SET)
-	-	-
-	-	-
-	-	-
-	-	-

DRAWING DATE: 01/11/2024
DRAWN BY: ER
PM: TT

CONTENTS:
(B) PLAN-SECTIONS CANTILEVERED

SHEET #:
A202

JOB #: AAAO17771