SENJU SPRINKLER CO., LTD.

Residential Lead Free Flat Concealed Sprinkler, Pendent,
Model: RC-RES, K-Factor: 3.0, SIN: SS8361

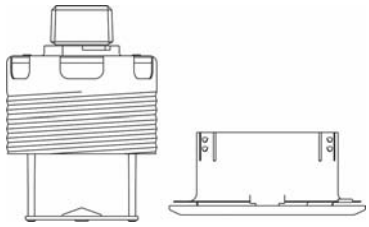

GENERAL DESCRIPTION

The Model RC-RES Residential Flat Concealed Sprinklers are automatic sprinklers of the compressed fusible solder type. They are decorative and fast responding. The Cover Plate Assembly hides the Deflector, Heat Responsive Element etc., which is concealed above the ceiling. The cover plate has a flat profile, and its diameter is extremely small (2-5/8 inch, 68mm). The push-on and/or thread-on, thread-off design of the concealed cover plate assembly allows for easy installation of the cover plate. Therefore, the Model RC-RES should be your first choice when aesthetics is the major consideration for ultimate appeal and unbeatable performance is desired. The Model RC-RES is designed for residential occupancies and is perfect for use in homes, hotels and other living quarters.

The Model RC-RES is to be used in wet pipe residential sprinkler systems for One- and Two- Family Dwellings and Manufactured Homes per NFPA 13D; wet pipe residential sprinkler systems for Residential Occupancies up to and Including Four Stories in Height per NFPA 13R; or, wet pipe sprinkler systems for the residential portions of any occupancies per NFPA 13.

The Model RC-RES has a 3.0 (43.2 LPM/bar$^{1/2}$) K-factor that meets the required residential flow rates with minimal residual pressure, which allows for smaller pipe sizes and water supply requirements.

For extended installation flexibility, the Model RC-RES provides 1/2 inch (12.8mm) vertical adjustment. This adjustment in installation decreases the need for precise cutting of the pipe that drops to the sprinkler and allows for a perfect fit with a range of pipe lengths.

The heat sensitivity and water distribution design of Model RC-RES allows for an increased chance of residents to escape or evacuate in case of a fire. However, residential fire sprinkler systems are not a substitute for fire safety awareness or fire safety construction required by building codes.

"Lead Free" is defined in the Reduction of Lead in Drinking Water Act (S.3874) endorsed by AWWA's Water Utility Council, and California Assembly Bill #1953 as having less than or equal to a weighted average of 0.25% lead in wetted surface of pipes, plumbing fittings and fixtures.

WARNINGS

The Model RC-RES must be installed and maintained in accordance with the rules stated herein as well as in compliance with the applicable standards of the National Fire Protection Association regulations and the standards of any other authorities having jurisdiction.

In the event of this condition, consult the authorities having jurisdiction for guidance and approval.

Failure to do so may impair the integrity of these devices.

It is the responsibility of the installing contractor to provide a copy of this document to the owner or their representative, and in turn, it is the obligation of the owner to provide a copy of this document to a succeeding owner. The owner is responsible for maintaining their fire protection system and devices in proper operating condition. The installing contractor or sprinkler manufacturer should be contacted with any related questions.

☒ REVIEWED ☐ MAKE CORRECTIONS NOTED
☐ NO EXCEPTION TAKEN ☐ REVISE AND RESUBMIT
☐ REJECTED ☐ SUBMIT SPECIFIED ITEM ☐ RECORD ONLY

CHECKING IS ONLY FOR GENERAL CONFORMANCE WITH THE DESIGN CONCEPT OF THE PROJECT AND GENERAL CONFORMANCE WITH THE INFORMATION GIVEN IN THE CONTRACT DOCUMENTS. ANY ACTION SHOWN IS SUBJECT TO THE REQUIREMENTS OF THE PLANS AND SPECIFICATIONS. CONTRACTOR IS RESPONSIBLE FOR: DIMENSIONS WHICH SHALL BE CONFIRMED AND CORRELATED AT THE JOB SITE; FABRICATION PROCESSES AND TECHNIQUES OF CONSTRUCTION; COORDINATION OF THE WORK WITH THAT OF ALL OTHER TRADES AND THE SATISFACTORY PERFORMANCE OF THE WORK.

PROJ # Kappa Res SECTION #
DATE 1/16/25 BY BEATE IOANIDE-CULI,
R&B ARCHITECTURE STUDIO

TECHNICAL DATA

Approvals: **$_c$UL$_{us}$ Listed**
NSF/ANSI/CAN 61, NSF/ANSI 372
Sprinkler Identification Number (SIN): **SS8361**
Maximum Working Pressure: **175psi (12.1bar)**
Discharge Coefficient (Nominal K-Factor):
K=3.0 GPM/psi$^{1/2}$ (43.2 LPM/bar$^{1/2}$)
Temperature Rating:
162°F (72°C) Sprinkler with 140°F (60°C) Cover Plate
175°F (79°C) Sprinkler with 140°F (60°C) Cover Plate
175°F (79°C) Sprinkler with 162°F (72°C) Cover Plate
205°F (96°C) Sprinkler with 162°F (72°C) Cover Plate
Color Code (Sprinkler)
162°F (72°C): Uncolored
175°F (79°C): White
205°F (96°C): White
Color Code (Cover Plate)
140°F (60°C): No Mark
162°F (72°C): White-Colored Mark
Vertical Adjustment: **1/2 inch (12.8 mm)**
Cover Plate Finishes:
Standard Finishes-
White, Ivory, Beige, Brown, Black, Nickel, Wood Grain
Custom Finishes-
Custom color and custom pattern cover plates are available on special order. Contact a Senju Sprinkler representative with any custom orders.
Please see chart on Page 8 for more detail.
Physical Characteristics: **Ref. Figures 1 and 1-1**

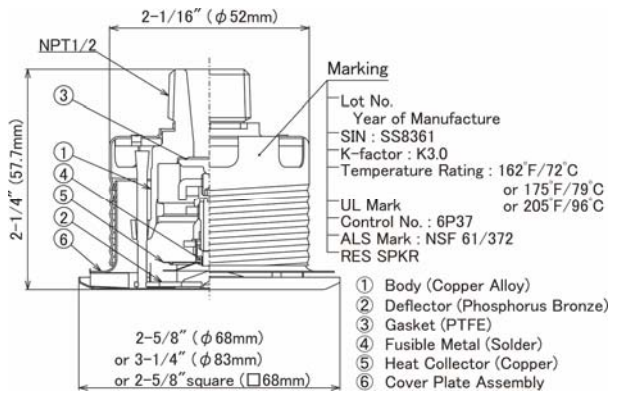

FIGURE 1. Model RC-RES K=3.0

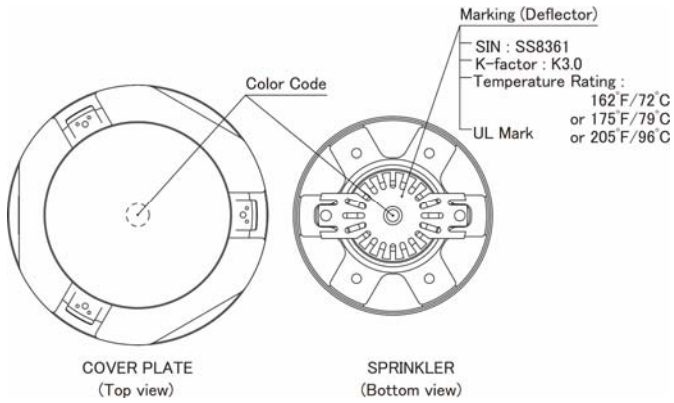

FIGURE 1-1. Marking (Color Code)

OPERATION

In case of fire, the solder component that holds together the Cover Plate and the Retainer melts. Then the Cover Plate is released at once. As a result, the Deflector drops down to the intended position. Two Heat Collectors are exposed to fire, and when sufficient heat from the fire is reached, internal components of the sprinkler fall apart. This leads to the water flow to be distributed on the affected fire area. (Ref. Figure 2)

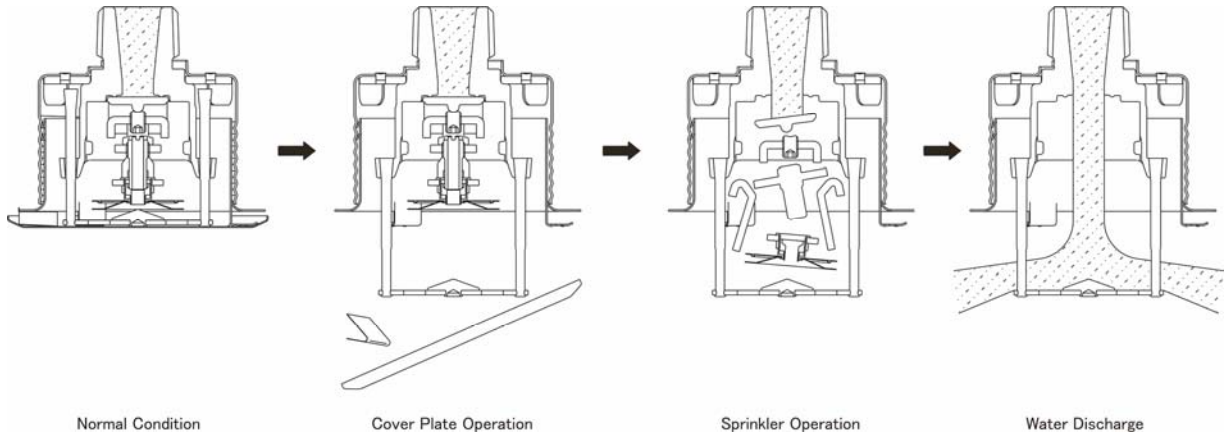

FIGURE 2. OPERATION PROCESS（The figure is for illustrative purposes only）

DESIGN CRITERIA

The herein stated rules for use and installation of Model RC-RES are provided by the manufacturer and must be strictly implemented for safe and full results.

NOTES

Residential Fire Sprinkler Systems should only be designed and installed by individuals who are completely familiar with automatic sprinkler system design, installation procedures, and techniques.

Several criteria may apply to the installation and usage of each sprinkler. Consequently, it is recommended that the sprinkler system designer review and develop a working understanding of the complete list of criteria prior to initiating the design of the sprinkler system.

Questions concerning sprinkler installation and usage criteria, which are not covered by the following instructions, should be submitted to your contracted company. Include sketches and technical details, as appropriate.

In some instances, the requirements of this document may concern specifications which are more stringent, and which take precedence over those specified in NFPA 13, 13D, 13R, or by the authority having jurisdiction.

The Model RC-RES must not be used in applications where the air pressure above the ceiling is greater than that below. Inspect all sprinklers after installation to ensure that both the gap between the cover plate, ceiling and the 6 slots in the cup are open and free from any air flow impediment.

The spray from the sprinkler is distributed radially outward and downward from the sprinkler deflector. Consequently, the sprinklers must be located such that there will be no blind spaces shielded from spray by partitions, room dividers, overhangs or other parts of the dwelling structure.

The number of sprinklers within each compartment (as defined by NFPA 13, 13D, or 13R) must be kept as few as possible. Do NOT use more sprinklers than necessary to cover a particular space.

Use only the Cover Plate provided for the Model RC-RES. The sprinkler must be secured in place by firmly fastening the sprinkler system piping to the structure. If the sprinkler is not properly secured in position, reaction forces resulting from sprinkler operation could alter its orientation and its water distribution pattern.

Obstruction to Water Distribution

Locations of sprinklers must follow the obstruction rules of NFPA 13, 13D and 13R for Residential Sprinklers.

General Service Conditions

The Model RC-RES must only be utilized in WET PIPE sprinkler systems.

Heat Source Criteria

Refer to NFPA 13D, 13R or 13 for the requirements relating to the prevention of possible activation of the Heat Responsive Element of Model RC-RES, due to the exposure of a heat source other than an actual fire.

Available Sprinkler Temperature Ratings			
Sprinkler Temperature Classification	Sprinkler Nominal Temperature Rating	Maximum Ambient Ceiling Temperature	Temperature Rating of the Cover Plate Assembly
Ordinary	162°F (72°C)	100°F (38°C)	140°F (60°C)
Intermediate	175°F (79°C)	150°F (66°C)	140°F (60°C) [1)]
Intermediate	175°F (79°C)	150°F (66°C)	162°F (72°C)
Intermediate	205°F (96°C)	150°F (66°C)	162°F (72°C)

1) Maximum ambient temperature for the Cover Plate Assembly is 100°F (38°C).

Precautionary Warnings for Corrosive Environments

Model RC-RES sprinklers should not be installed where they may be subjected to a corrosive environment including the following:

(1) Chlorine ion and Chloride environment.

Stress corrosion cracking may be caused by exposure to environments with Chlorine ion and Chloride. Exposure to this environment may result in sprinklers operating under Non-Fire conditions or Not Operating when exposed to an actual fire.

(2) Sprinkler system piping with Copper.

Sprinkler systems should be constructed in compliance with the applicable standards and the requirements for copper piping when copper piping is used in the sprinkler system. (Reference standards NFPA 13, ASTM B813, B828, and CDA (Copper Development Association) – Solder Joint)

All residual flux must be removed from the interior and exterior of the copper piping by thoroughly flushing before installation of the Sprinkler Heads. Otherwise, residues of flux may cause corrosion and/or leakage in the sprinkler system.

Hydraulic Design Criteria

The minimum required sprinkler flow rates for systems designed to NFPA 13D or 13R are given in TABLE A as a function of temperature rating and the maximum allowable coverage area. The sprinkler flow rate is the minimum required discharge from the most hydraulically demanding sprinkler from each of the total number of "design sprinklers" as specified in NFPA 13D or 13R.

For systems designed to NFPA 13, the number of designed sprinklers is to be the four most hydraulically demanding sprinklers. The minimum required discharge from each of the four sprinklers is to be the greater of the following:

- The flow rates given in TABLE A for NFPA 13D and 13R as a function of temperature rating and maximum allowable coverage area.
- A minimum discharge of 0.1GPM/sq.ft. [4.07LPM/sq.m] over the "design area" comprised of the four most hydraulically demanding sprinklers for the actual coverage area being protected by the four sprinklers.

TABLE A. NFPA 13D & 13R WET PIPE HYDRAULIC DESIGN CRITERIA for Model SS8361

For systems with ceiling types smooth flat horizontal, or beamed, or sloped, in accordance with NFPA 13D, 13R or 13 as applicable.

Maximum Coverage Area[a] Ft. × Ft. (m ×m)	Maximum Spacing Ft. (m)	Ordinary Temperature Rating 162°F (72°C)		Intermediate Temperature Rating 175°F (79°C)		Intermediate Temperature Rating 205°F (96°C)		Deflector to Ceiling	Installation Type	Minimum Spacing Ft. (m)
		Flow[b] GPM (L/min)	Pressure[b] PSI (bar)	Flow[b] GPM (L/min)	Pressure[b] PSI (bar)	Flow[b] GPM (L/min)	Pressure[b] PSI (bar)			
12×12 (3.7×3.7)	12 (3.7)	9 (34.1)	9.0 (0.62)	9 (34.1)	9.0 (0.62)	9 (34.1)	9.0 (0.62)	Smooth Ceilings 3/8 to 7/8 Inches. Beamed Ceilings per NFPA 13D, 13R or 13 Installed in beam 3/8 to 7/8 inches below bottom of beam.	Concealed	8 (2.4)
14×14 (4.3×4.3)	14 (4.3)	11 (41.6)	13.4 (0.92)	—	—	11 (41.6)	13.4 (0.92)			

(a) For coverage area dimensions less than the above mentioned, it needs to use the minimum required flow for the Next Higher Coverage Area listed.

(b) Requirement is based on minimum flow in GPM (LPM) from each sprinkler. The associated residual pressures are calculated using the nominal K-Factor. Refer to Hydraulic Design Criteria Section for details.

Sprinkler Spacing Criteria

The minimum spacing between sprinklers is 8 feet (2.4m). The maximum spacing between sprinklers cannot go beyond the coverage area calculated by using the specific hydraulic factors. (Ref. TABLE A)

INSTALLATION

The Model RC-RES must be installed in accordance with the following instructions:

NOTES

Do not use any sprinklers which have been subjected to potential mechanical damage. Do not use any sprinklers which show deformation or cracking in either the Sprinkler or the Protective Cap.

Prior to installation, sprinklers should be maintained in the original cartons and packaging until used to minimize the potential for damage to the sprinklers that could cause improper operation or non-operation.

The Protective Cap must remain on the sprinkler during installation. After the installation is completed, the Protective Cap must be removed to place the sprinkler in service.

Use a torque of 7 to 14 ft·lbs (9.5 to 19.0 N·m) to achieve a 1/2 inch NPT sprinkler joint. If you exceed the recommended maximum torque, this could result in damage to the sprinkler inlet, which may lead to leakage from the sprinkler.

Use only NR-H model wrench socket for installation of RC-RES sprinklers. Use of any other wrench or socket is prohibited and may cause damage to the sprinkler.

In case of insufficient adjustment in Cover Plate installation, do not try to overly tighten, screw the sprinkler too loosely or make any modification to the cover plate assembly. Readjust the sprinkler fitting for a better fit.

Do not rotate the Cap Remover RC to the left with force when placing the two hook arms into place. The installed sprinkler may become loosened, which may cause water leakage.

Installing Procedure

Step 1

The installation requirements for the sprinkler are as follows: to be installed only in the pendent position with the waterway perpendicular to the ceiling. Install the sprinkler fitting so that the distance from the face of the fitting to the mounting surface will be nominally 2 inches (50.8mm) as shown in Figure 3.

Step 2

With pipe thread sealant applied to the threads, hand tighten the sprinkler into the sprinkler fitting. Then tighten it with the Socket NR-H or Ratchet (3/8" drive) & Socket NR-H Combination (Ref. Figure 4). The teeth of the Socket must fit perfectly with the grooves on the Sprinkler for proper installation (Ref. Figure 4).

Step 3

If desired, the Protective Cap may also be used to locate the center of the clearance hole by gently pushing the ceiling material against the center point of the Protective Cap. Before the installation of the ceiling, the sprinkler installation can be started with a 2-3/8 inch (60mm) diameter clearance hole (Ref. Figure 3). Use the "Vertical Adjustment" indicator on the Protective Cap to check for proper installation height (Ref. Figure 3).

Step 4

Use the Cap Remover RC to remove the Protective Cap (Ref. Figure 5), and then push or screw a Cover Plate Assembly on the Cup of the Sprinkler by hand until its flange just has contact with the ceiling (Ref. Figure 6 and Figure 7). Stop tightening the Cover Plate Assembly once the flange has contact with the ceiling. If the ceiling has been lifted from its normal position in the process of tightening the Cover Plate Assembly, readjust the cover plate assembly as necessary. If the flange of the Cover Plate Assembly cannot contact the ceiling sufficiently, readjust the sprinkler fitting as necessary. When properly installed, there is a nominal 1/16 inch (1.6mm) air gap between the lip of the Cover Plate and the ceiling, as shown in Figure 6.

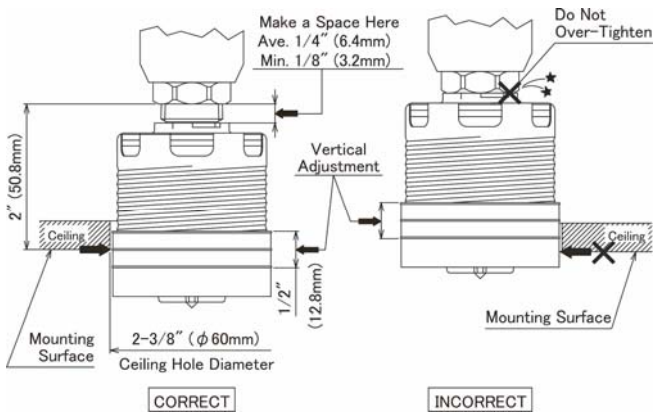

FIGURE 3. INSTALLATION

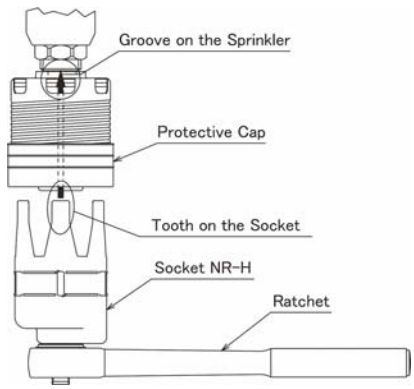

FIGURE 4. RATCHET & SOCKET

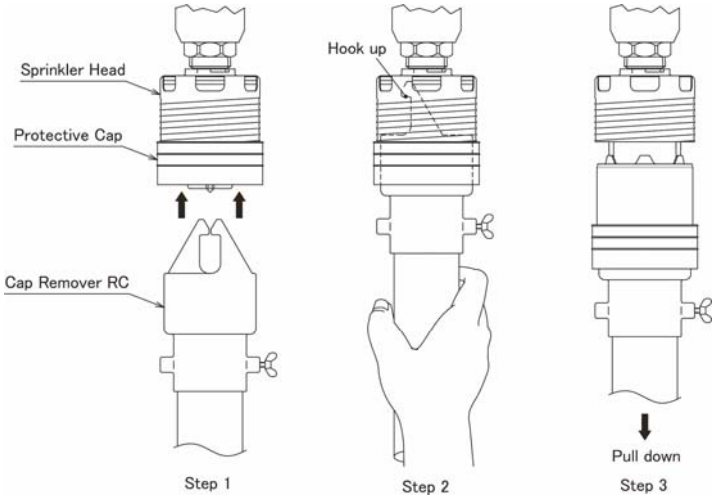

FIGURE 5. PROTECTIVE CAP REMOVAL

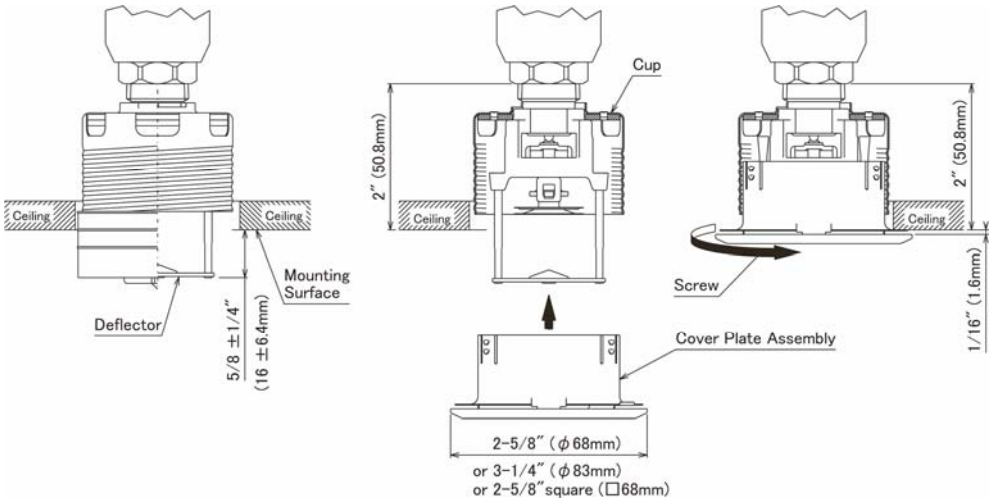

FIGURE 6. INSTALLATION (COVER PLATE ASSEMBLY)

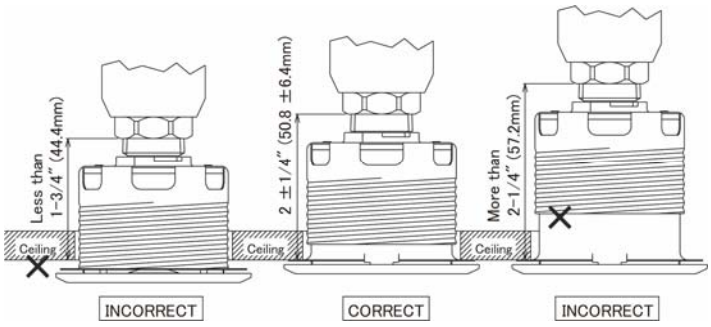

FIGURE 7. INSTALLATION (CORRECT and INCORRECT)

CARE AND MAINTENANCE

The following instructions must be implemented for the maintenance and service of the Model RC-RES.

NOTES

Wet pipe sprinkler systems must be maintained at a minimum temperature of 40°F/4°C to prevent freezing and bursting of the pipe and/or sprinklers.

Automatic sprinklers are not to be tested with a heat source. Operation of the heat responsive element can result.

Absence of a Cover Plate Assembly may delay the response time of the sprinkler in case of a fire.

Install the cover plate assembly properly, as shown in Figure 6. Improper installation of the cover plate assembly may cause improper operation or non-operation.

If the ceiling is to be repainted after the installation of the Sprinkler, care must be exercised to ensure that the new paint does not seal off any of the air gap.

Factory painted Cover Plates must not be repainted. They should be replaced, if necessary, by factory painted cover plates. Non-factory applied paint may adversely delay or prevent sprinkler operation in case of a fire.

Do not pull the Cover Plate. Separation may result.

In preparation for maintenance of the fire protection system, permission to close the main control valve must be obtained from the proper authorities, and all affected parties by this action, and must be informed before the maintenance session can commence.

Do NOT enclose any sprinklers within drapes, curtains, or valances.

Do NOT hang anything from the sprinklers.

Do NOT clean the sprinklers with soap and/or water, detergents, ammonia, cleaning fluids, or other chemicals. Remove dust, lint, cobwebs, cocoons, insects, and larvae by gently brushing with a feather duster or gently vacuuming with a soft bristle (i.e., dusting) brush attachment.

Exercise suitable safety precautions in the use and storage of highly flammable materials. The rapid rate of fire development and spread of these materials can reduce the ability of the sprinkler system to aid in the control of a fire involving such hazards.

Leaking or corroded sprinklers must be replaced.

Automatic Sprinklers must be kept in a cool and dry place.

Automatic sprinklers must never be physically altered, such as painted, plated, or coated, once shipped from the factory. If the sprinklers have been in any way modified, they must be replaced.

Great caution must be applied to prevent damage to the sprinklers at all stages - before, during, and after installation. Damaged units because of dropping, hitting, over-tightening, or wrench slippage, must be replaced.

The Model RC-RES must only be replaced with pendent sprinklers which are listed for residential fire protection service and which have the same nominal K-Factor, the same coverage area, and the same or lower flow ratings (as indicated under TABLE ***A "Hydraulic Design Criteria").***

When remodeling, such as by adding false beams or light fixtures or changing the location of compartment walls, first verify that the new construction will not violate the installation requirements of the applicable standards of NFPA. Alter the new construction and/or the sprinkler system to suit the requirements of this document and the applicable NFPA regulations.

The owner is responsible for the maintenance of the sprinkler system, including inspection and testing of its compliance with this document, as well as the standards of the National Fire Protection Association (e.g., NFPA 25), and the regulations of any other authorities having jurisdiction. The owner should direct any questions regarding the above rules and regulations to the installing contractors or the sprinkler manufacturer. It is recommended that automatic sprinkler systems be inspected, tested, and maintained by a qualified Inspection Service in accordance with NFPA 25.

Limited Warranty

For details of warranty, refer to Sales Contract.

ORDER PROCEDURE

When placing an order, please contact a local distributor with the following information (Model Name, Temperature Rating and Finish).

Sprinkler

Model: RC-RES

(SIN: SS8361, Residential Flat Concealed Sprinkler, Pendent, K3.0, Temperature: 162°F (72°C) or 175°F (79°C)) or 205°F (96°C))

Cover Plate Assembly

2-5/8 inch (φ68mm) or 3-1/4 inch (φ83mm) or 2-5/8 inch square (□68mm), Order Separately from Sprinkler

Please refer to the chart below for available sizes and finishes.

	Standard Finishes								Custom Finishes	
	White	Ivory	Beige	Brown	Black	Nickel	Copper	Wood Grain	Custom Color	Custom Pattern
2-5/8" Round, 140°F	○	○	-	-	-	-	-	-	○	○
3-1/4" Round, 140°F	○	○	○	○	○	○	○	○	○	○
2-5/8" Square, 140°F	○	-	-	-	-	-	-	-	○	○
2-5/8" Round, 162°F	○	-	-	-	-	-	-	-	○	○
3-1/4" Round, 162°F	○	-	-	-	-	-	-	-	○	○

Tools for Installation of Model RC-RES

・Socket NR-H
  For use with a 3/8” drive ratchet (not included)
・Socket NR-H Plastic
  For use with a 1/2” drive ratchet (not included)
・Cap Remover RC