22-130202-DFS-01-CO

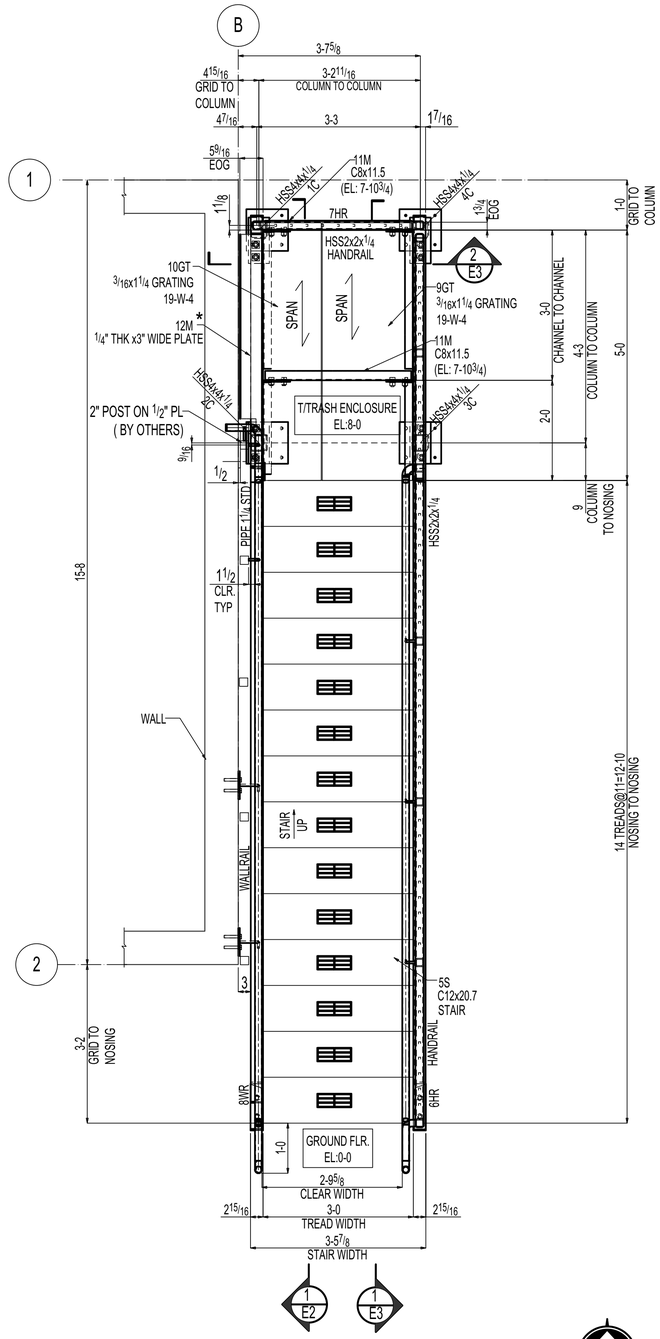

TRASH ENCLOSURE STAIR PLAN

REF:2/A6.02

NOTES:

1. EOG - INDICATES EDGE OF GRATING.
2. - INDICATES SPAN OF GRATING.
3. FOR ELEVATION VIEWS & SECTION VIEWS REFER SHEETS E2 THRU E4.
4. * - INDICATES CUT TO SUIT IN FIELD AS REQUIRED.

JOB NORTH

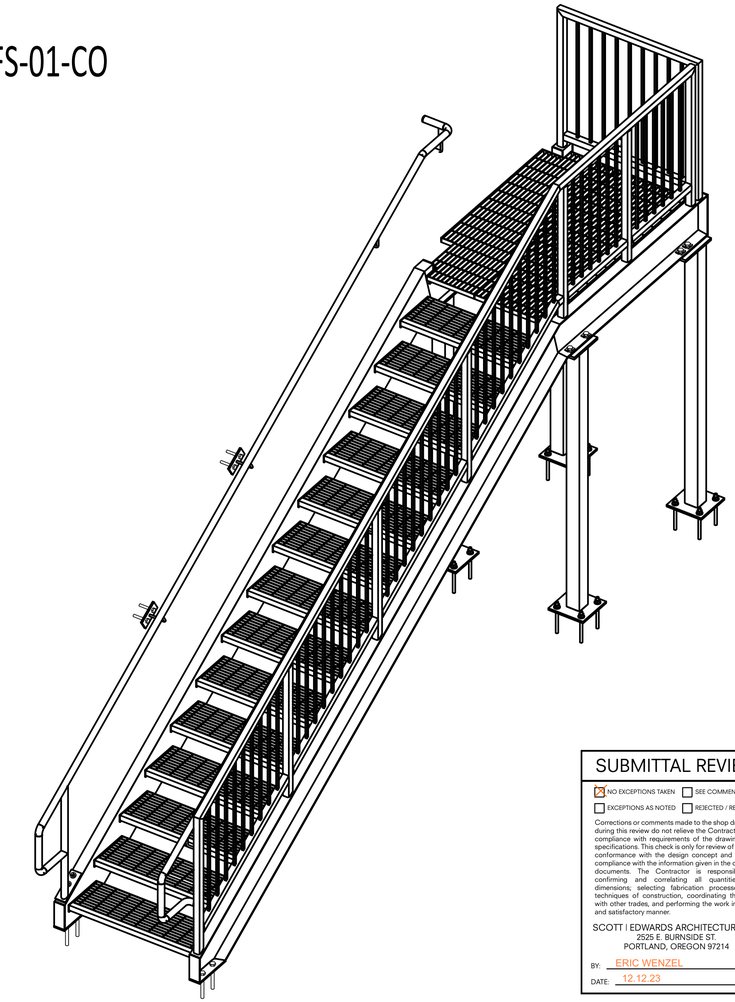

ISOMETRIC VIEW

SUBMITTAL REVIEW

☒ NO EXCEPTIONS TAKEN ☐ SEE COMMENTS
☐ EXCEPTIONS AS NOTED ☐ REJECTED / RESUBMIT

Corrections or comments made to the shop drawings during this review do not relieve the Contractor from compliance with requirements of the drawings and specifications. This check is only for review of general conformance with the design concept and general compliance with the information given in the contract documents. The Contractor is responsible for confirming and correlating all quantities and dimensions; selecting fabrication processes and techniques of construction, coordinating the work with other trades, and performing the work in a safe and satisfactory manner.

SCOTT I EDWARDS ARCHITECTURE, LLP
2525 E. BURNSIDE ST.
PORTLAND, OREGON 97214

BY: ERIC WENZEL
DATE: 12.12.23

☑ No Exception Taken ☐ Make Corrections Noted
☐ Submit Additional/ Specified Items ☐ Revise and Resubmit

Checking by GSE is only for general conformance with the design concept of the project and general compliance with the information given in the contract documents. Any action shown is subject to the requirements of the plans and specifications. The general contractor is responsible for: Dimensions which shall be confirmed at the jobsite; fabrication processes and techniques of construction; coordination of his work with that of all other trades; and the satisfactory performance of his work.

GSE, Inc.
Date: 11/6/23
By: Jim Gipe, S.E.

REVISION	DATE	BY	DESCRIPTION
1	09-08-2023	KRK	ISSUED FOR FIELD USE
2	08-30-2023	KRK	ISSUED FOR APPROVAL

STRUCTURAL REGISTERED PROFESSIONAL ENGINEER 94113PE OREGON NOVEMBER 13, 2018 AMBER D. DELLANGELO
11/28/2023
EXPIRATION DATE: 12/31/2023

Larson Engineering Inc
1488 Bond Street, Suite 100
Naperville, Illinois 60563-6503
(P) 630.357.0540 (F) 630.357.0164

LEI COMM NO. 21230501.000
SEALED LIMITED TO STAIR ONLY.
LAYOUT, MATERIALS, QUANTITIES ARE EXCLUDED.

City of Portland
Reviewed for Code Compliance
Date: 01/24/24
Permit #: 22-130202-DFS-01-CO

SUPERIOR METAL FAB

PROJECT: WONDERLOVE STAIRS
1300 SE 2ND AVE PORTLAND, OR 97214

ITEM: TRASH ENCLOSURE STAIR PLAN & ISOMETRIC VIEW

CONTRACTOR: -----	DETAILER: SUPERIOR METAL FAB	PROJECT MANAGER: JUSTIN	
DR. BY: MMR DATE: 07-12-2023	CHK'D BY: KRK DATE: 07-12-2023	ERECTION REF.: A6.02	
SCALE: NTS	JOB NO.: 220617	DWG. NO.: E1	2

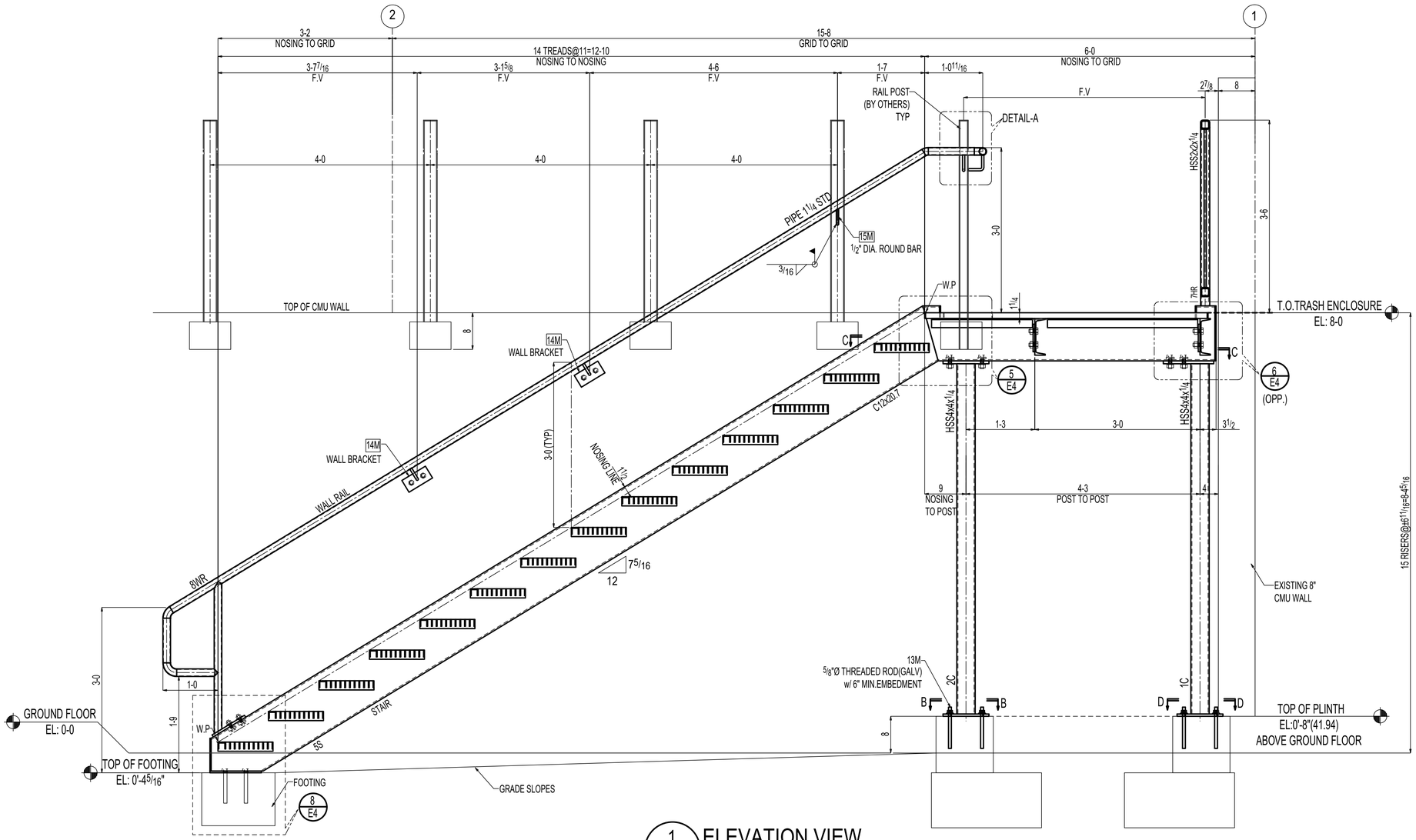

1 / E2 ELEVATION VIEW

(REF: 6/A3.01)

SECTION A-A
DELETED

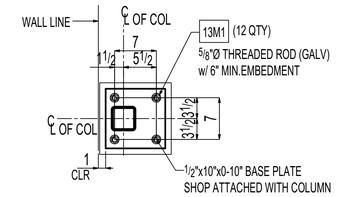

SECTION B-B

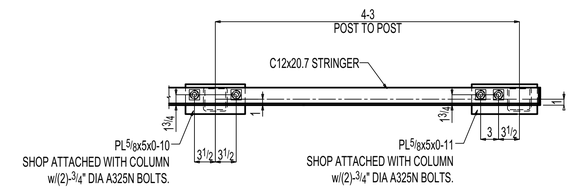

SECTION C-C

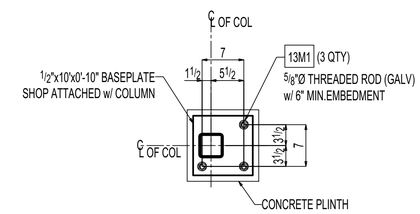

SECTION D-D

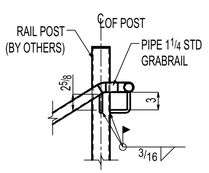

DETAIL-A

REVISION	DATE	BY	DESCRIPTION
1	09-08-2023	KRK	ISSUED FOR FIELD USE
2	08-30-2023	KRK	ISSUED FOR APPROVAL

STRUCTURAL REGISTERED PROFESSIONAL ENGINEER 94113PE OREGON NOVEMBER 13, 2018 AMBER D. DELLANGELO

11/28/2023

EXPIRATION DATE: 12/31/2023

Larson Engineering Inc
1488 Bond Street, Suite 100
Naperville, Illinois 60563-6503
(P) 630.357.0540 (F) 630.357.0164

LEI COMM NO. 21230501.000
SEALED LIMITED TO STAIR ONLY.
LAYOUT, MATERIALS, QUANTITIES
ARE EXCLUDED.

City of Portland
Reviewed for
Code Compliance
Date: 01/24/24
Permit #: 22-198282 BFC 01-CC

SUPERIOR METAL FAB

PROJECT:	WONDERLOVE STAIRS 1300 SE 2ND AVE PORTLAND, OR 97214		
ITEM:	ELEVATION VIEW		
CONTRACTOR: ----	DETAILER: SUPERIOR METAL FAB	PROJECT MANAGER: JUSTIN	
DR. BY: MMR DATE: 07-12-2023	CHK'D BY: KRK DATE: 07-12-2023	ERECTION REF.: 6/A3.01	
SCALE: NTS	JOB NO.: 220617	DWG. NO.: E2	2

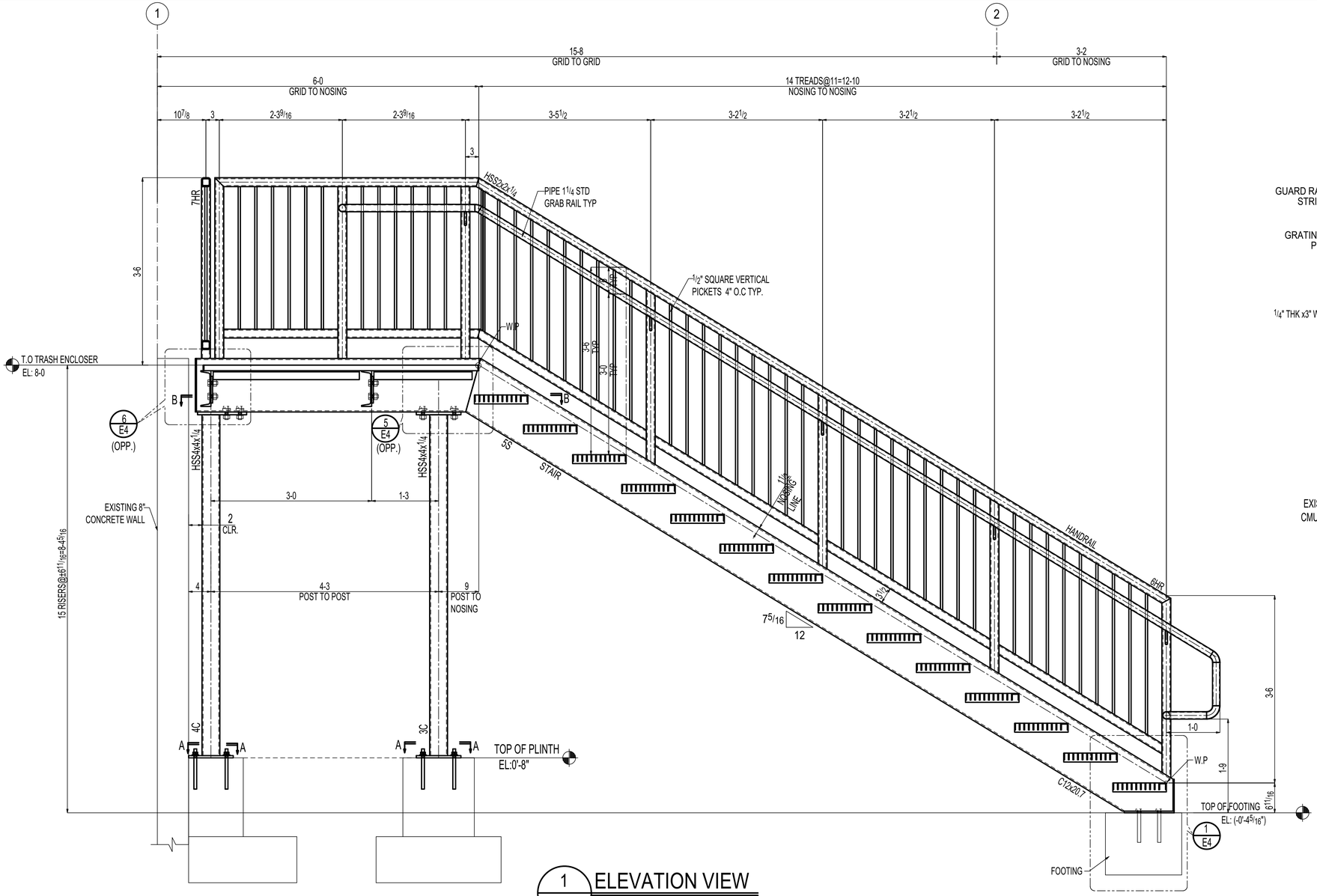

1 E3 ELEVATION VIEW

(REF:6/A3.01)

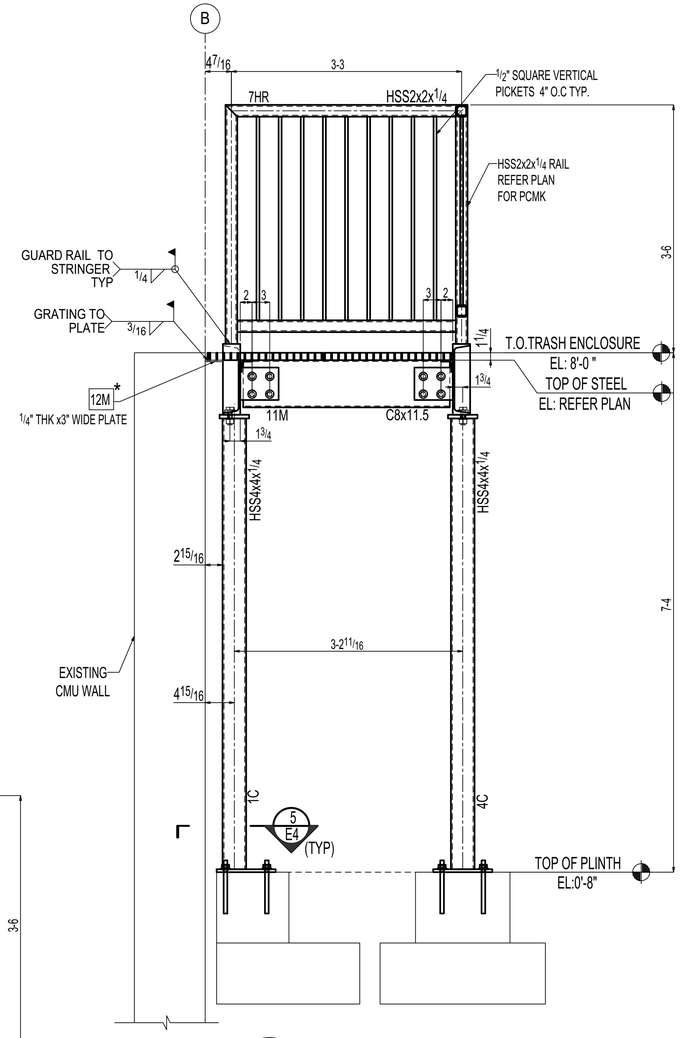

2 E3 SECTION VIEW

(REF: A3.01)

NOTES:

1. * - INDICATES CUT TO SUIT IN FIELD AS REQUIRED.

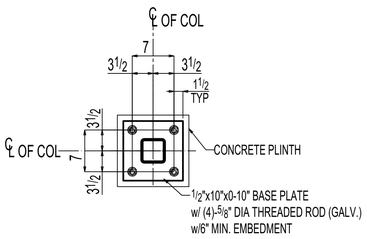

SECTION A-A

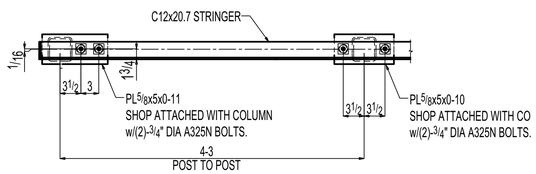

SECTION B-B

City of Portland
Reviewed for
Code Compliance
Date: 01/24/24
~~Permit #: 22-198282 BFC-01-SC~~

STRUCTURAL REGISTERED PROFESSIONAL ENGINEER 94113PE OREGON NOVEMBER 13, 2018 AMBER D. DELLANGELO
EXPIRATION DATE: 12/31/2023
11/28/2023

Larson
Engineering Inc
1488 Bond Street, Suite 100
Naperville, Illinois 60563-6503
(P) 630.357.0540 (F) 630.357.0164

LEI COMM NO. 21230501.000
SEALED LIMITED TO STAIR ONLY.
LAYOUT, MATERIALS, QUANTITIES
ARE EXCLUDED.

REVISION	DATE	BY	DESCRIPTION
1	09-08-2023	KRK	ISSUED FOR FIELD USE
2	08-30-2023	KRK	ISSUED FOR APPROVAL

SUPERIOR METAL FAB

PROJECT: WONDERLOVE STAIRS
1300 SE 2ND AVE PORTLAND, OR 97214

ITEM: ELEVATION VIEWS

CONTRACTOR: -----	DETAILER: SUPERIOR METAL FAB	PROJECT MANAGER: JUSTIN	
DR. BY: MMR	DATE: 07-12-2023	CHK'D BY: KRK	DATE: 07-12-2023	ERECTION REF.: -----
SCALE: NTS	JOB NO.: 220617	DWG. NO.: E3	1

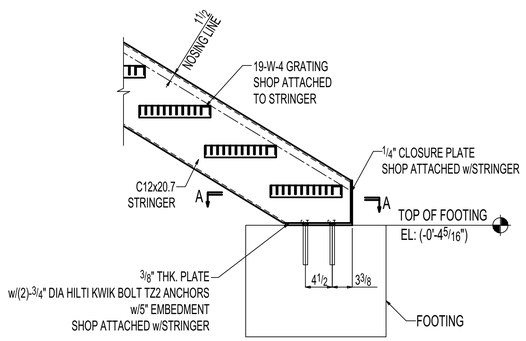

1 / E4 TYPICAL STRINGER BOTTOM CONNECTION

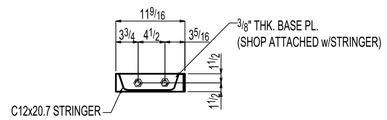

SECTION A-A

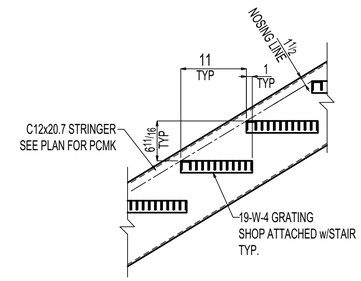

2 / E4 TYPICAL STRINGER TREAD DETAIL

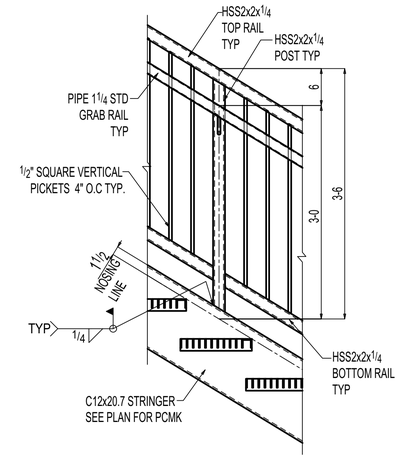

3 / E4 TYPICAL HANDRAIL DETAIL VIEW

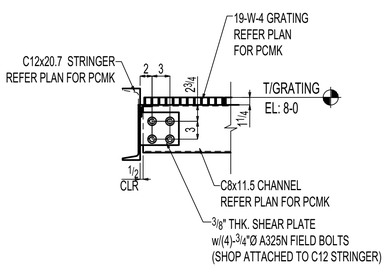

4 / E4 TYPICAL CHANNEL TO STRINGER CONNECTION

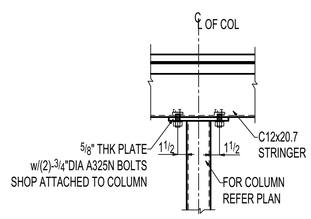

5 / E4 SECTION VIEW

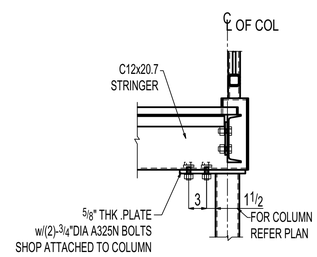

6 / E4 SECTION VIEW

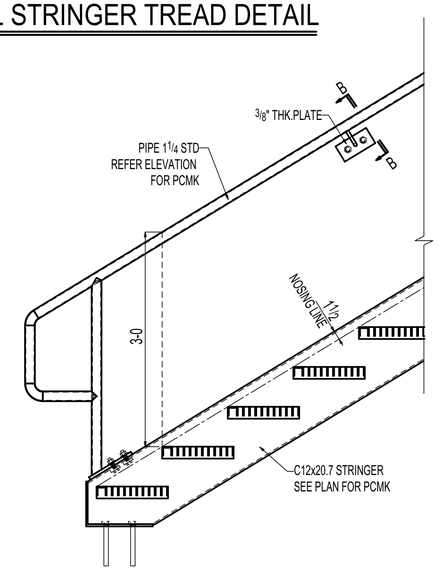

7 / E4 TYPICAL WALLRAIL DETAIL

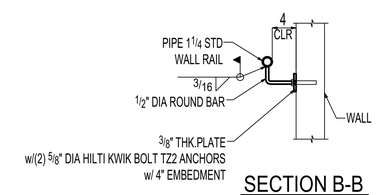

SECTION B-B

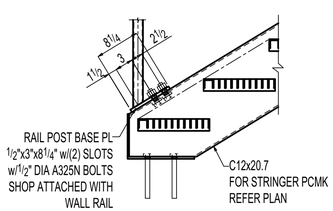

8 / E4 SECTION VIEW

City of Portland
Reviewed for Code Compliance
Date: 01/24/24
Permit #: 22-198282 BFC 01 CO

STRUCTURAL REGISTERED PROFESSIONAL ENGINEER 94113PE OREGON NOVEMBER 13, 2018 AMBER D. DELLANGELO
EXPIRATION DATE: 12/31/2023
11/28/2023

Larson Engineering Inc
1488 Bond Street, Suite 100
Naperville, Illinois 60563-6503
(P) 630.357.0540 (F) 630.357.0164

LEI COMM NO. 21230501.000
SEALED LIMITED TO STAIR ONLY.
LAYOUT, MATERIALS, QUANTITIES ARE EXCLUDED.

REVISION	DATE	BY	DESCRIPTION
1	09-08-2023	KRK	ISSUED FOR FIELD USE
2	08-30-2023	KRK	ISSUED FOR APPROVAL

SUPERIOR METAL FAB

PROJECT: WONDERLOVE STAIRS
1300 SE 2ND AVE PORTLAND, OR 97214

ITEM: SECTION VIEWS

CONTRACTOR: ----	DETAILER: SUPERIOR METAL FAB	PROJECT MANAGER: JUSTIN	
DR. BY: MMR	DATE: 07-12-2023	CHK'D BY: KRK	DATE: 07-12-2023	ERECTION REF.: -----
SCALE: NTS	JOB NO.: 220617	DWG. NO.: E4	2

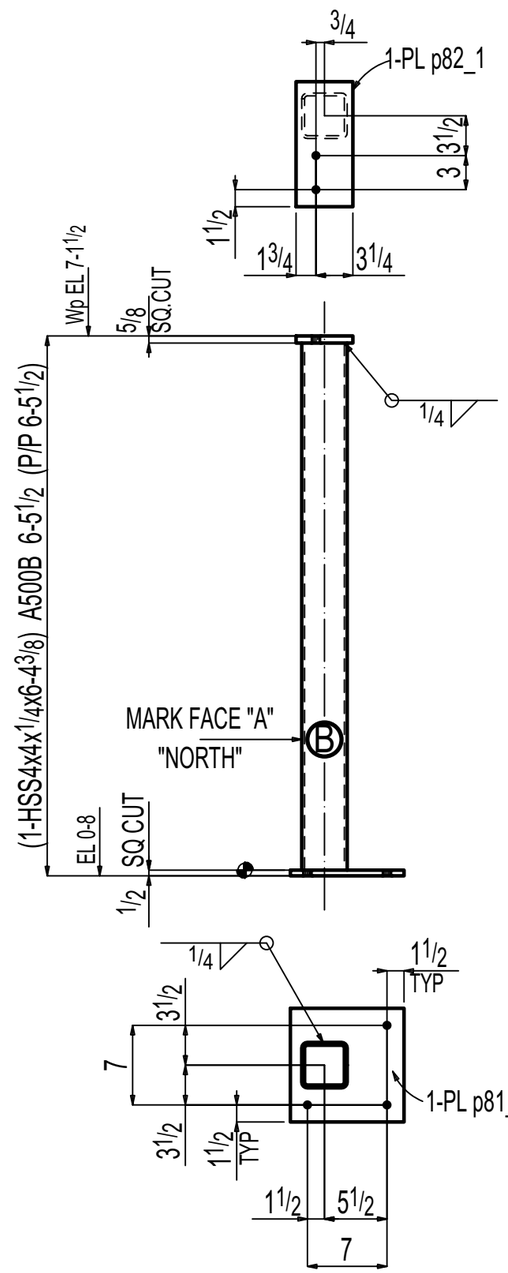

ONE COLUMN 1C

AT GRID: 1 & B

GALV. NOTES:
1.ALL WELDS FOR STRENGTH ARE TO BE MADE AS SHOWN ON DETAILS.
2.IN ADDITION TO STRENGTH WELDS ALL MATERIAL IS TO BE SEAL WELD.
3.PROVIDE VENT HOLES AS REQUIRED.

BILL OF MATERIAL

SEQ #	QTY TOTAL	PC MARK	DESCRIPTION	LENGTH		REMARKS	WEIGHT TOTAL	ADVANCE MILL #
1	ONE	1C	COLUMN			GALV	102	
	1	1C	HSS4x4x1/4	6	4 3/8	S2E A500B	78	
	1	p82_1	PL5/8x5	0	11	A36	10	
	1	p81_1	PL1/2x10	0	10	A36	14	

OPEN HOLES ARE TO BE 13/16 UNLESS NOTED		WELDING ELECTRODE = E70XX U/N	
FINISH U.N.O	HOT DIPPED GALVANIZED	CLEANING : SSPC-SP6	
MATERIAL U.N.O	A36 PL,CH & AN - A500 B HSS - A992 WF-PIPE STD-A53		

REVISION	DATE	BY	DESCRIPTION
1	09-08-2023	MMR	ISSUED FOR FABRICATION
0	08-30-2023	MMR	ISSUED FOR APPROVAL

SUPERIOR METAL FAB

PROJECT: WONDERLOVE STAIRS
1300 SE 2ND AVE PORTLAND, OR 97214

ITEM: COLUMN DETAIL

CONTRACTOR: ----	DETAILER: SUPERIOR METAL FAB	PROJECT MANAGER: JUSTIN	
DR. BY: MMR DATE: 07-12-2023	CHK'D BY: KVR DATE: 07-12-2023	ERECTION REF.: E1	
SCALE: NTS	JOB NO.: 220617	DWG. NO.: 1C	0

City of Portland
Reviewed for Code Compliance
Date: 01/24/24
Permit #:
22-130202-DFS-01-CO

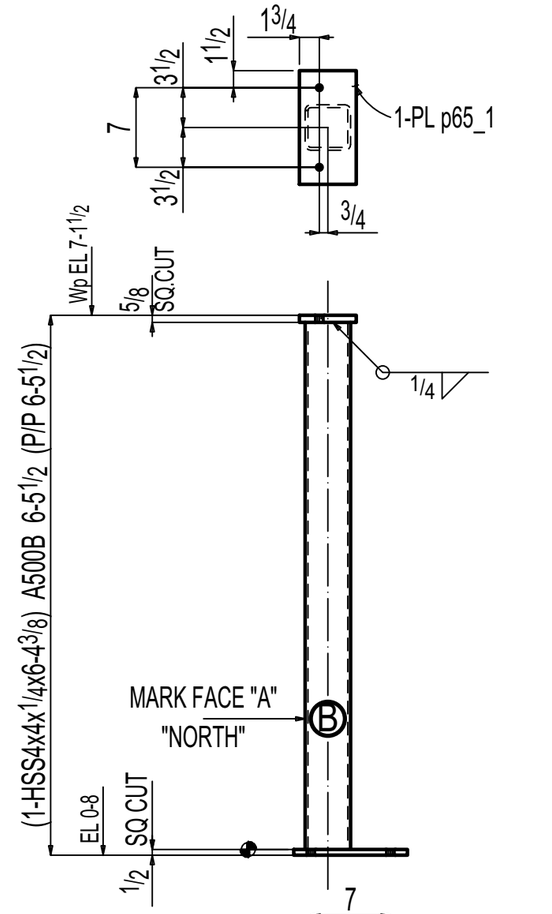

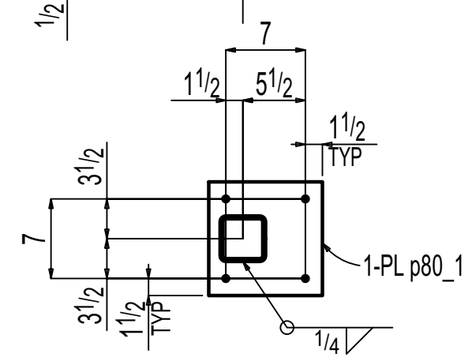

ONE COLUMN 2C

AT GRID:
T & B

GALV. NOTES:
1.ALL WELDS FOR STRENGTH ARE TO BE MADE AS SHOWN ON DETAILS.
2.IN ADDITION TO STRENGTH WELDS ALL MATERIAL IS TO BE SEAL WELD.
3.PROVIDE VENT HOLES AS REQUIRED.

BILL OF MATERIAL

SEQ #	QTY TOTAL	PC MARK	DESCRIPTION	LENGTH		REMARKS	WEIGHT TOTAL	ADVANCE MILL #
1	ONE	2C	COLUMN			GALV	101	
	1	2C	HSS4x4x1/4	6	4 3/8	S2E A500B	78	
	1	p65_1	PL5/8x5	0	10	A36	9	
	1	p80_1	PL1/2x10	0	10	A36	14	

OPEN HOLES ARE TO BE 13/16 UNLESS NOTED		WELDING ELECTRODE = E70XX U/N	
FINISH U.N.O	HOT DIPPED GALVANIZED	CLEANING : SSPC-SP6	
MATERIAL U.N.O	A36 PL,CH & AN - A500 B HSS - A992 WF-PIPE STD-A53		

REVISION	DATE	BY	DESCRIPTION
1	09-08-2023	MMR	ISSUED FOR FABRICATION
0	08-30-2023	MMR	ISSUED FOR APPROVAL

SUPERIOR METAL FAB

PROJECT: WONDERLOVE STAIRS
1300 SE 2ND AVE PORTLAND, OR 97214

ITEM: COLUMN DETAIL

CONTRACTOR: ----	DETAILER: SUPERIOR METAL FAB	PROJECT MANAGER: JUSTIN	
DR. BY: MMR DATE: 07-12-2023	CHK'D BY: KVR DATE: 07-12-2023	ERECTION REF.: E1	
SCALE: NTS	JOB NO.: 220617	DWG. NO.: 2C	0

City of Portland
Reviewed for Code Compliance
Date: 01/24/24
Permit #:
22-130202-DFS-01-CO

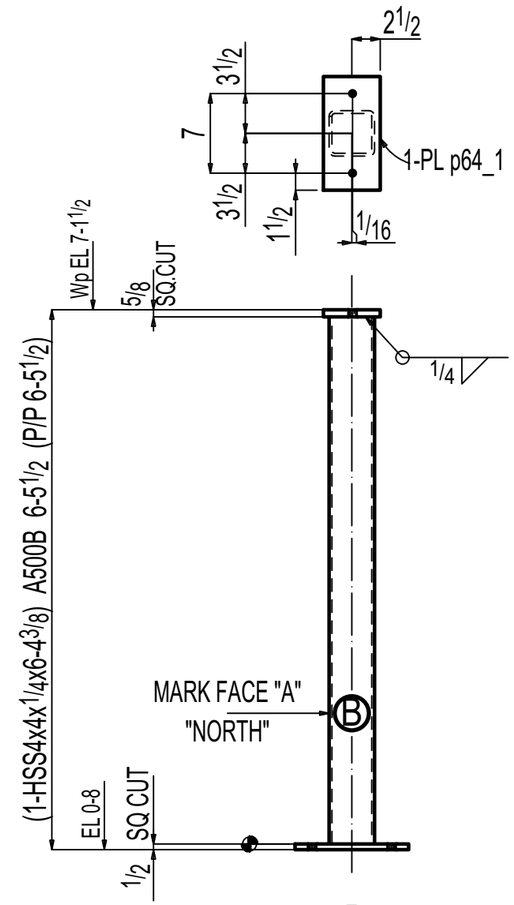

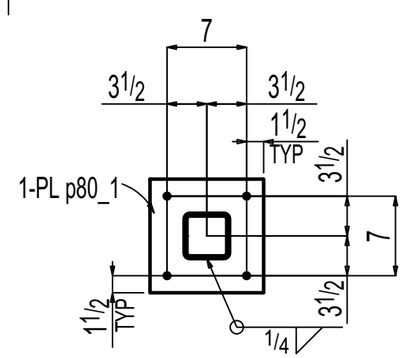

ONE COLUMN 3C

AT GRID: 1 & B

GALV. NOTES:
1.ALL WELDS FOR STRENGTH ARE TO BE MADE AS SHOWN ON DETAILS.
2.IN ADDITION TO STRENGTH WELDS ALL MATERIAL IS TO BE SEAL WELD.
3.PROVIDE VENT HOLES AS REQUIRED.

BILL OF MATERIAL

SEQ #	QTY TOTAL	PC MARK	DESCRIPTION	LENGTH		REMARKS	WEIGHT TOTAL	ADVANCE MILL #
1	ONE	3C	COLUMN				101	
	1	3C	HSS4x4x1/4	6	4 3/8	S1E A500B	78	
	1	p64_1	PL5/8x5	0	10	A36	9	
	1	p80_1	PL1/2x10	0	10	A36	14	

City of Portland
Reviewed for Code Compliance
Date: 01/24/24
Permit #:
22-130202-DFS-01-CO

OPEN HOLES ARE TO BE 13/16 UNLESS NOTED		WELDING ELECTRODE = E70XX U/N
FINISH U.N.O	HOT DIPPED GALVANIZED	CLEANING : SSPC-SP6
MATERIAL U.N.O	A36 PL,CH & AN - A500 B HSS - A992 WF-PIPE STD-A53	

REVISION	DATE	BY	DESCRIPTION
2	09-08-2023	MMR	ISSUED FOR FABRICATION
1	08-30-2023	MMR	ISSUED FOR APPROVAL

SUPERIOR METAL FAB

PROJECT: WONDERLOVE STAIRS
1300 SE 2ND AVE PORTLAND, OR 97214

ITEM: COLUMN DETAIL

CONTRACTOR: ----	DETAILER: SUPERIOR METAL FAB	PROJECT MANAGER: JUSTIN	
DR. BY: MMR DATE: 07-12-2023	CHK'D BY: KVR DATE: 07-12-2023	ERECTION REF.: E1	
SCALE: NTS	JOB NO.: 220617	DWG. NO.: 3C	0

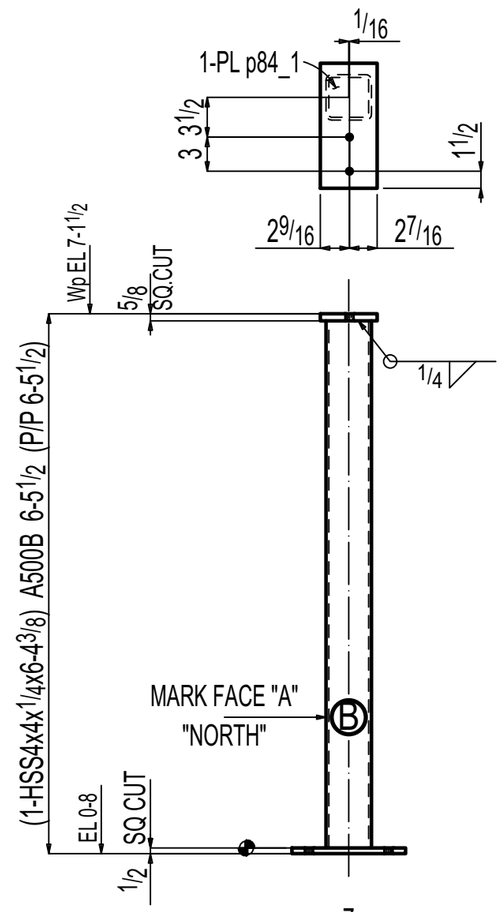

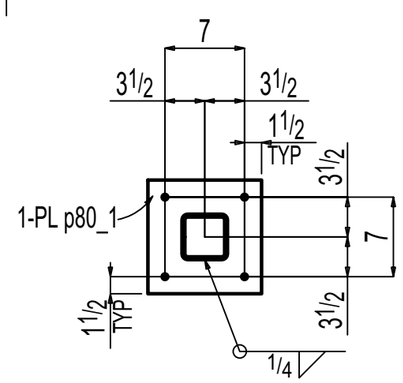

ONE COLUMN 4C

AT GRID:
1 & B

GALV. NOTES:
1.ALL WELDS FOR STRENGTH ARE TO BE MADE AS SHOWN ON DETAILS.
2.IN ADDITION TO STRENGTH WELDS ALL MATERIAL IS TO BE SEAL WELD.
3.PROVIDE VENT HOLES AS REQUIRED.

BILL OF MATERIAL

SEQ #	QTY TOTAL	PC MARK	DESCRIPTION	LENGTH		REMARKS	WEIGHT TOTAL	ADVANCE MILL #
1	ONE	4C	COLUMN			GALV	102	
	1	4C	HSS4x4x1/4	6	4 3/8	S2E A500B	78	
	1	p84_1	PL5/8x5	0	11	A36	10	
	1	p80_1	PL1/2x10	0	10	A36	14	

OPEN HOLES ARE TO BE 13/16 UNLESS NOTED		WELDING ELECTRODE = E70XX U/N	
FINISH U.N.O	HOT DIPPED GALVANIZED	CLEANING : SSPC-SP6	
MATERIAL U.N.O	A36 PL,CH & AN - A500 B HSS - A992 WF-PIPE STD-A53		

REVISION	DATE	BY	DESCRIPTION
1	09-08-2023	MMR	ISSUED FOR FABRICATION
0	08-30-2023	MMR	ISSUED FOR APPROVAL

SUPERIOR METAL FAB

PROJECT: WONDERLOVE STAIRS
1300 SE 2ND AVE PORTLAND, OR 97214

ITEM: COLUMN DETAIL

CONTRACTOR: ---- | DETAILER: SUPERIOR METAL FAB | PROJECT MANAGER: JUSTIN

DR. BY: MMR | DATE: 07-12-2023 | CHK'D BY: KVR | DATE: 07-12-2023 | ERECTION REF.: E1

SCALE: NTS | JOB NO.: 220617 | DWG. NO.: 4C | 0

City of Portland
Reviewed for Code Compliance
Date: 01/24/24
Permit #:
22-130202-DFS-01-CO

BILL OF MATERIAL

LINE #	QTY TOTAL	PC MARK	DESCRIPTION	LENGTH		REMARKS	WEIGHT TOTAL	ADVANCE MILL #
	ONE	5S	STAIR			Galv	1528	
	1	5SL1	C12x20.7	5	3 11/16	A36	110	
	1	5SR1	C12x20.7	5	3 11/16	A36	110	
	1	5SL	C12x20.7	15	5 3/16	A36	326	
	1	5SR	C12x20.7	15	5 3/16	A36	326	
	2	a15_1	L2x2x1/4	2	8 3/4	A36	17	
	2	a23_1	L2x2x1/4	1	10	A36	12	
	4	p96_1	PL3/8x6	0	6 1/2	A36	17	
	2	p68_1	PL3/8x3	0	11 3/16	A36	7	
	2	p55_1	PL1/4x2 3/4	0	2 15/16	A36	1	
	2	p21_1	PL1/4x2 15/16	1	0	A36	5	
	2	p79_1	PL1/4x2 15/16	0	7 1/8	A36	3	
	14	gt2_1	GT11/2x12	3	0	A-1011	595	
			FIELD BOLTS					
	4		3/4 DIA HILTI KWIK	0	7			
			BOLT TZ2 ANCHORS					
	8		3/4 Dia A325	0	2 1/2	+1BVL,1HD WASH		
	2		1/2 Dia A325	0	2 1/4	+1BVL,1HD WASH		

Total weight : 1528

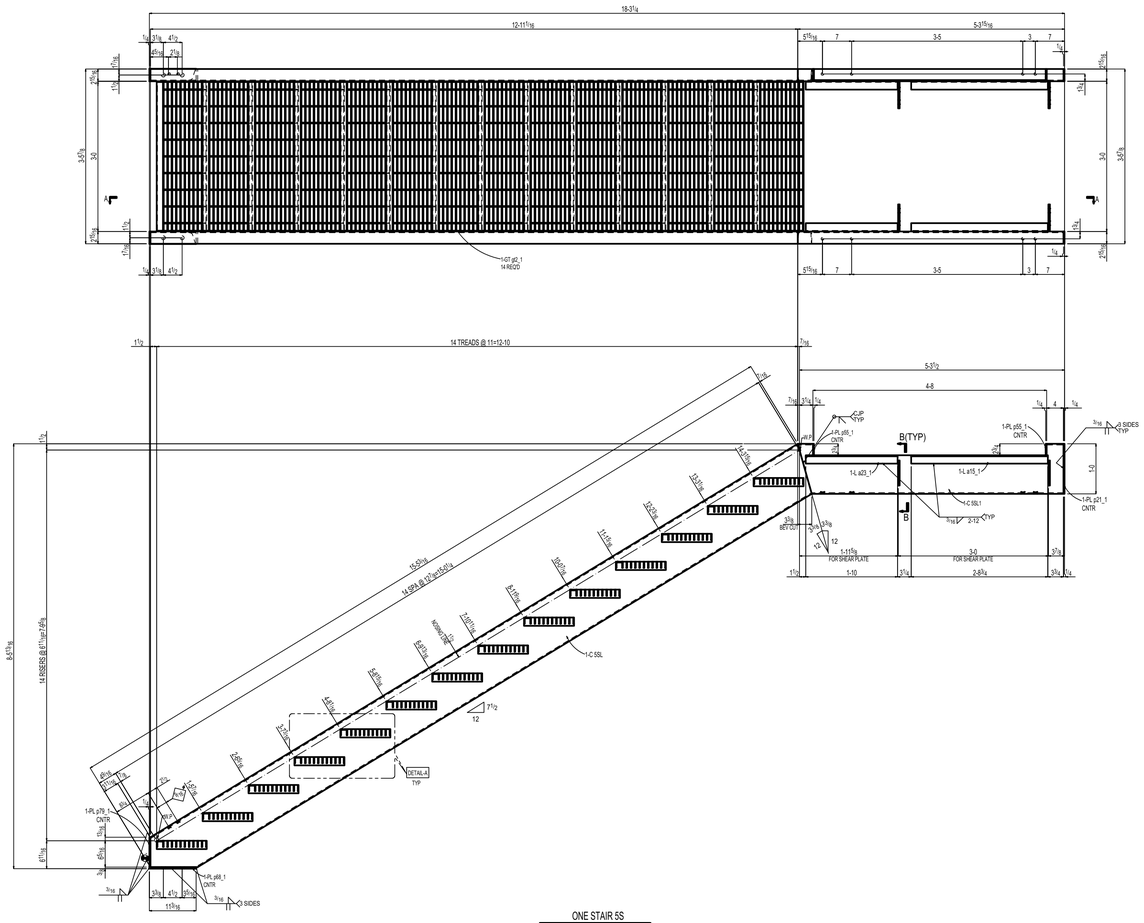

ONE STAIR 5S

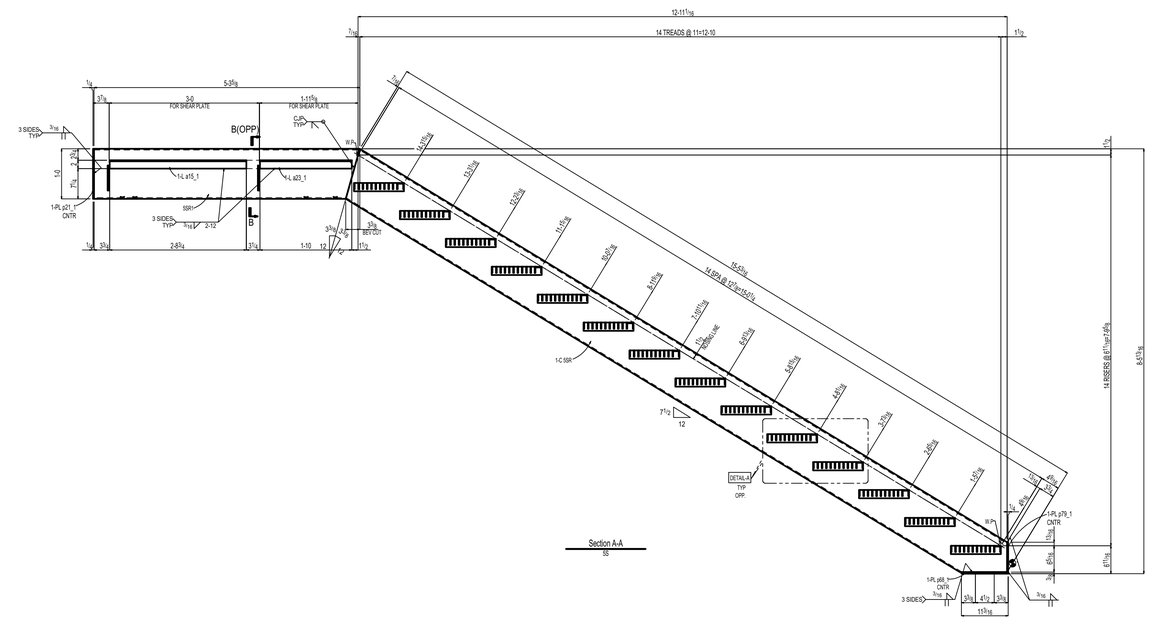

Section A-A
SS

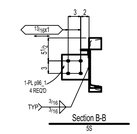

Section B-B
SS

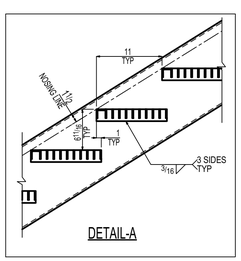

DETAIL-A

OPEN HOLES ARE TO BE 13/16 UNLESS NOTED			WELDING ELECTRODE = E70XX U/N
FINISH U.N.O	HOT DIPPED GALVANIZED		CLEANING : SSPC-SP6
MATERIAL U.N.O	A36 PL,CH & AN - A500 B HSS - A992 WF-PIPE STD-A53		

REVISION	DATE	BY	DESCRIPTION
1	09-08-2023	MMR	ISSUED FOR FABRICATION
2	08-30-2023	MMR	ISSUED FOR APPROVAL

SUPERIOR METAL FAB

PROJECT: WONDERLOVE STAIRS
1300 SE 2ND AVE PORTLAND, OR 97214

ITEM: STRINGER DETAIL

CONTRACTOR: ---
DETAILER: SUPERIOR METAL FAB
PROJECT MANAGER: JUSTIN

DR. BY: MMR DATE: 07-12-2023 CHK'D BY: KVR DATE: 07-12-2023 ERECTION REF.: E1

SCALE: NTS JOB NO.: 220617 DWG. NO.: 5S 1

GALV. NOTES:
1.ALL WELDS FOR STRENGTH ARE TO BE MADE AS SHOWN ON DETAILS.
2.IN ADDITION TO STRENGTH WELDS ALL MATERIAL IS TO BE SEAL WELD.
3.PROVIDE VENT HOLES AS REQUIRED.

City of Portland
Reviewed for Code Compliance
Date: 01/24/24
Permit #: 22-198282-BTG-04-SS

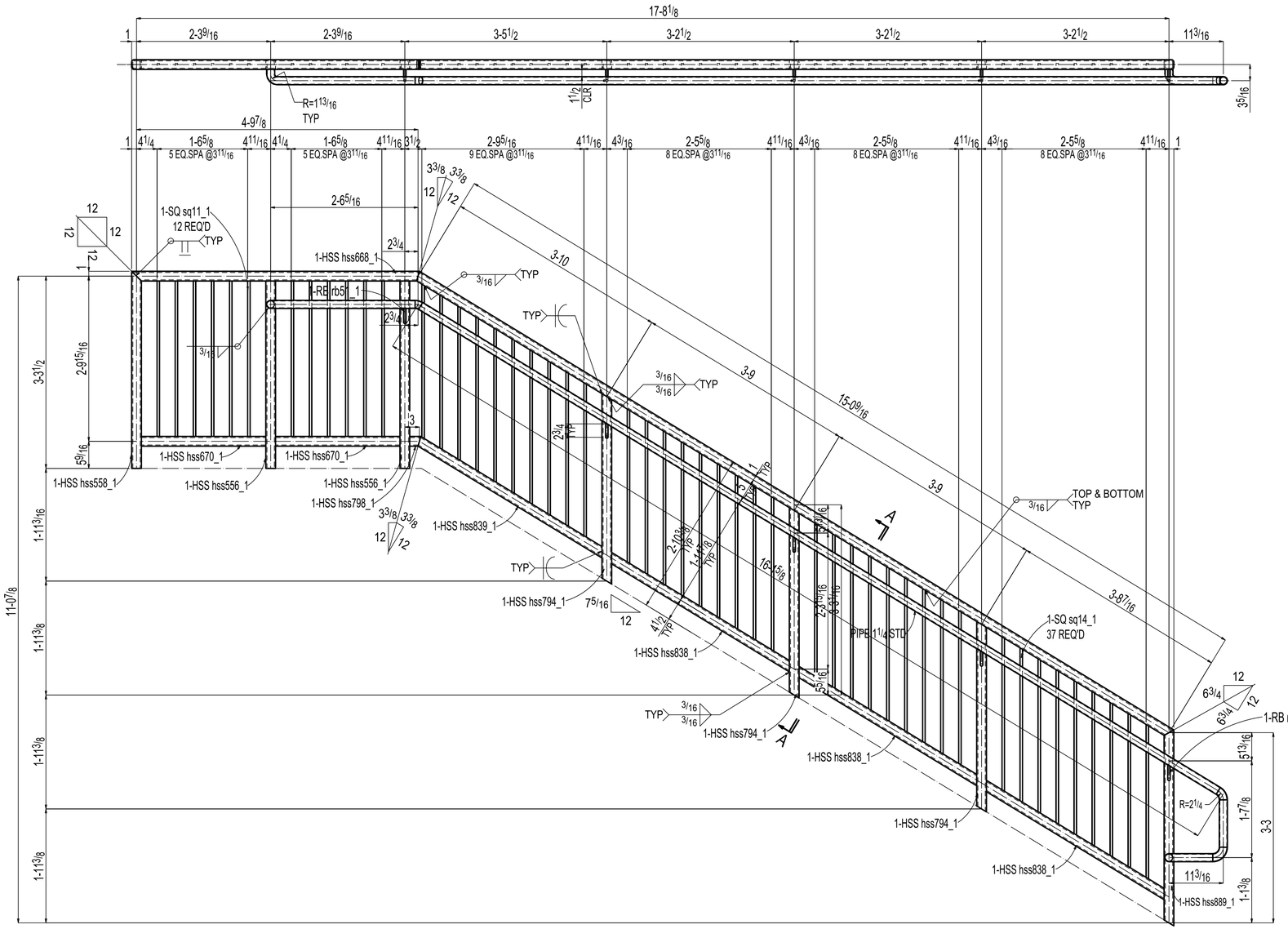

ONE HANDRAIL 6HR

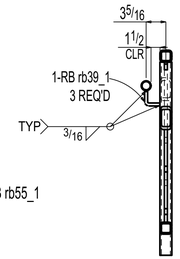

Section A-A
6HR

BILL OF MATERIAL

LINE #	QTY TOTAL	PC MARK	DESCRIPTION	LENGTH		REMARKS	WEIGHT TOTAL	ADVANCE MILL #
	ONE	6HR	HANDRAIL			GALV	483	
	1	6HR	HSS2x2x1/4	15	1 3/8	A500B	82	
	1	hss668_1	HSS2x2x1/4	4	11 1/8	A500B	27	
	1	hss839_1	HSS2x2x1/4	3	8 3/4	A500B	20	
	3	hss838_1	HSS2x2x1/4	3	7 15/16	A500B	59	
	1	hss558_1	HSS2x2x1/4	3	4 1/2	A500B	18	
	1	hss889_1	HSS2x2x1/4	3	4 1/4	A500B	18	
	3	hss794_1	HSS2x2x1/4	3	3 1/8	A500B	53	
	2	hss556_1	HSS2x2x1/4	3	2 1/2	A500B	35	
	2	hss670_1	HSS2x2x1/4	2	1 9/16	A500B	23	
	1	hss798_1	HSS2x2x1/4	0	2 1/4	A500B	1	
	1	hss918_1	PIPE 1 1/4 STD	64	0	LN-FT A53	145	
	1	rb55_1	RB 1/2	0	5 1/16	A36	0	
	1	rb51_1	RB 1/2	0	4 15/16	A36	0	
	3	rb39_1	RB 1/2	0	4 5/8	A36	1	
	12	sq11_1	1 1/2" SQUARE VERTICAL PICKETS	2	7 15/16	A36		
	37	sq14_1	1 1/2" SQUARE VERTICAL PICKETS	2	7 3/4	A36		

Total weight : 483

OPEN HOLES ARE TO BE 13/16 UNLESS NOTED

WELDING ELECTRODE = E70XX U/N

FINISH U.N.O: HOT DIPPED GALVANIZED

CLEANING : SSPC-SP6

MATERIAL U.N.O: A36 PL,CH & AN - A500 B HSS - A992 WF-PIPE STD-A53

REVISION	DATE	BY	DESCRIPTION
1	09-08-2023	MMR	ISSUED FOR FABRICATION
2	08-30-2023	MMR	ISSUED FOR APPROVAL

SUPERIOR METAL FAB

PROJECT: WONDERLOVE STAIRS
1300 SE 2ND AVE PORTLAND, OR 97214

ITEM: HANDRAIL DETAIL

CONTRACTOR: —

DETAILER: SUPERIOR METAL FAB

PROJECT MANAGER: JUSTIN

DR. BY: MMR DATE: 07-12-2023 CHK'D BY: KVR DATE: 07-12-2023 ERECTION REF.: E1

SCALE: NTS JOB NO.: 220617 DWG. NO.: 6HR 1

City of Portland
Reviewed for Code Compliance
Date: 01/24/24
~~Permit #: 22-198202 DFO 01 GC~~

GALV. NOTES:
1.ALL WELDS FOR STRENGTH ARE TO BE MADE AS SHOWN ON DETAILS.
2.IN ADDITION TO STRENGTH WELDS ALL MATERIAL IS TO BE SEAL WELD.
3.PROVIDE VENT HOLES AS REQUIRED.

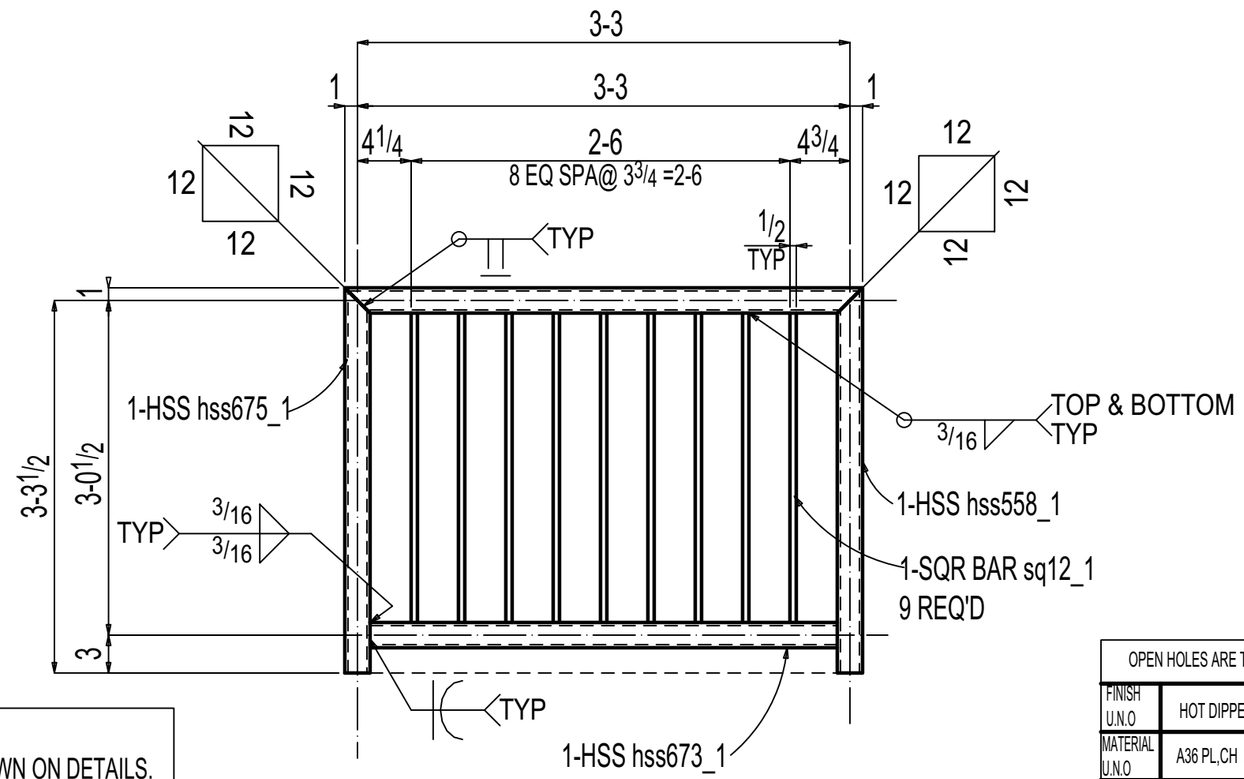

GALV. NOTES:
1.ALL WELDS FOR STRENGTH ARE TO BE MADE AS SHOWN ON DETAILS.
2.IN ADDITION TO STRENGTH WELDS ALL MATERIAL IS TO BE SEAL WELD.
3.PROVIDE VENT HOLES AS REQUIRED.

ONE HANDRAIL 7HR

BILL OF MATERIAL

SEQ #	QTY TOTAL	PC MARK	DESCRIPTION	LENGTH		REMARKS	WEIGHT TOTAL	ADVANCE MILL #
1	ONE	7HR	HANDRAIL				72	
	1	7HR	HSS2x2x1/4	3	5	A500B	18	
	1	hss558_1	HSS2x2x1/4	3	4 1/2	A500B	18	
	1	hss675_1	HSS2x2x1/4	3	4 1/2	A500B	18	
	1	hss673_1	HSS2x2x1/4	3	1	A500B	17	
	9	sq12_1	1/2" SQUARE VERTICAL	2	10 1/2	A36		
			PICKETS					

City of Portland

Reviewed for Code Compliance

Date: 01/24/24

Permit #:
22-130202-DFS-01-CO

OPEN HOLES ARE TO BE 13/16 UNLESS NOTED	WELDING ELECTRODE = E70XX U/N
FINISH U.N.O HOT DIPPED GALVANIZED	CLEANING : SSPC-SP6
MATERIAL U.N.O A36 PL,CH & AN - A500 B HSS - A992 WF-PIPE STD-A53	

REVISION	DATE	BY	DESCRIPTION
1	09-08-2023	MMR	ISSUED FOR FABRICATION
0	08-30-2023	MMR	ISSUED FOR APPROVAL

SUPERIOR METAL FAB

PROJECT: WONDERLOVE STAIRS
1300 SE 2ND AVE PORTLAND, OR 97214

ITEM: HANDRAIL DETAIL

CONTRACTOR: ----- | DETAILER: SUPERIOR METAL FAB | PROJECT MANAGER: JUSTIN

DR. BY: MMR DATE: 07-12-2023 | CHK'D BY: KVR DATE: 07-12-2023 | ERECTION REF.: E1

SCALE: NTS | JOB NO.: 220617 | DWG. NO.: 7HR | 0

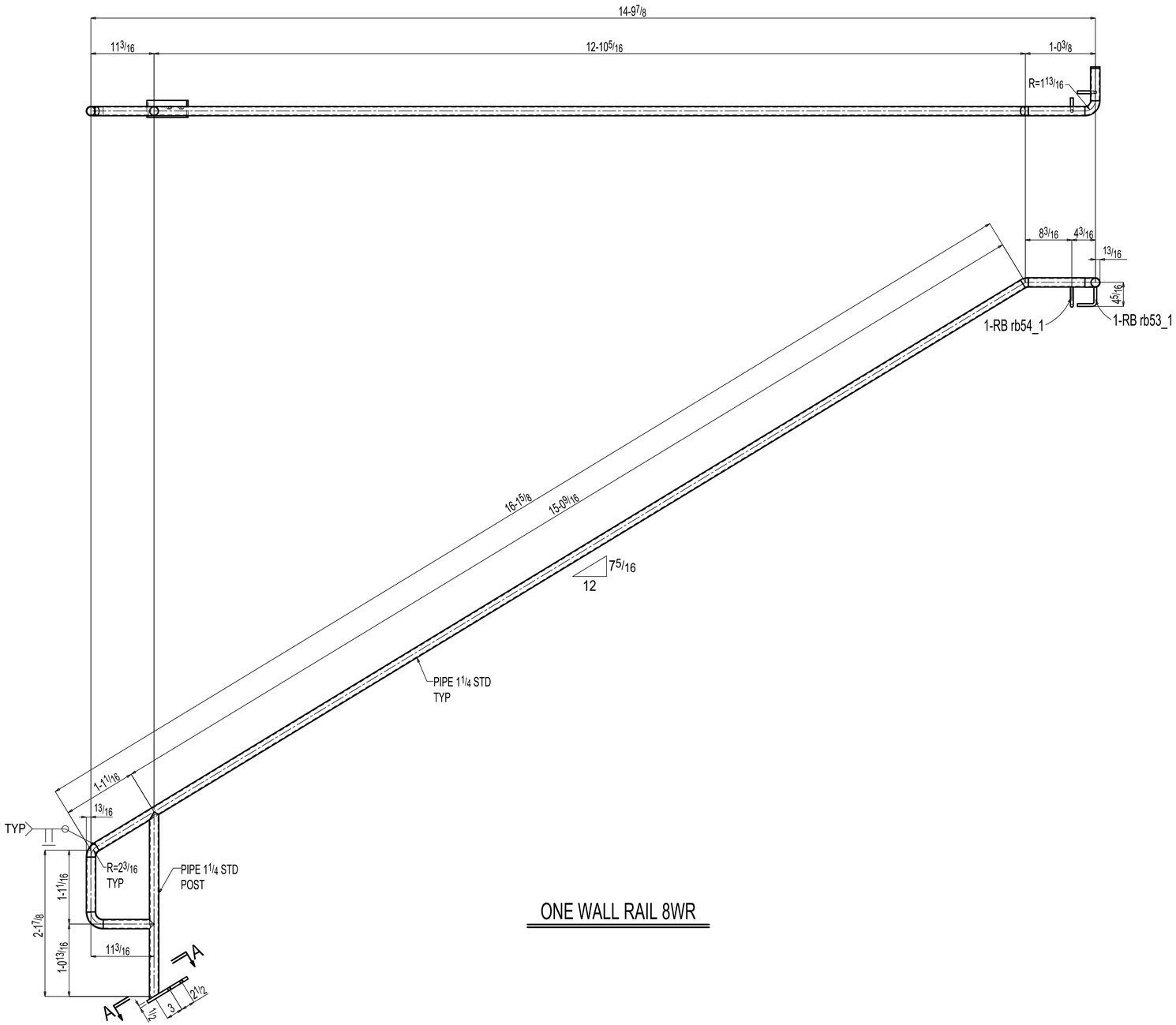

ONE WALL RAIL 8WR

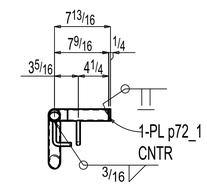

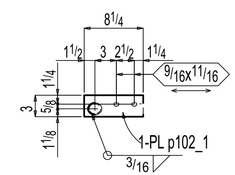

Section A-A
8WR

BILL OF MATERIAL

LINE #	QTY TOTAL	PC MARK	DESCRIPTION	LENGTH		REMARKS	WEIGHT TOTAL	ADVANCE MILL #
	ONE	8WR	WALL RAIL			GALV	59	
	1		PIPE 1 1/4 STD	24	0	LN-FT A53	54	
	1	rb53_1	RB 1/2	0	6 1/8	A36	0	
	1	rb54_1	RB 1/2	0	5 3/8	A36	0	
	1	p102_1	PL 1/2x3	0	8 1/4	A36	4	
	1	p72_1	PL 1/4x11 11/16			A36	0	

Total weight :59

GALV. NOTES:
1.ALL WELDS FOR STRENGTH ARE TO BE MADE AS SHOWN ON DETAILS.
2.IN ADDITION TO STRENGTH WELDS ALL MATERIAL IS TO BE SEAL WELD.
3.PROVIDE VENT HOLES AS REQUIRED.

City of Portland
Reviewed for Code Compliance
Date: 01/24/24
~~Permit #: 22-198202 DFO 01 GS~~

OPEN HOLES ARE TO BE 13/16 UNLESS NOTED | WELDING ELECTRODE = E70XX U/N

FINISH U.N.O: HOT DIPPED GALVANIZED | CLEANING : SSPC-SP6

MATERIAL U.N.O: A36 PL,CH & AN - A500 B HSS - A992 WF-PIPE STD-A53

REVISION	DATE	BY	DESCRIPTION
1	09-08-2023	MMR	ISSUED FOR FABRICATION
2	08-30-2023	MMR	ISSUED FOR APPROVAL

SUPERIOR METAL FAB

PROJECT: WONDERLOVE STAIRS
1300 SE 2ND AVE PORTLAND, OR 97214

ITEM: WALLRAIL DETAIL

CONTRACTOR: ---
DETAILER: SUPERIOR METAL FAB
PROJECT MANAGER: JUSTIN

DR. BY: MMR DATE: 07-12-2023 CHK'D BY: KVR DATE: 07-12-2023 ERECTION REF.: E1

SCALE: NTS JOB NO.: 220617 DWG. NO.: 8WR 1

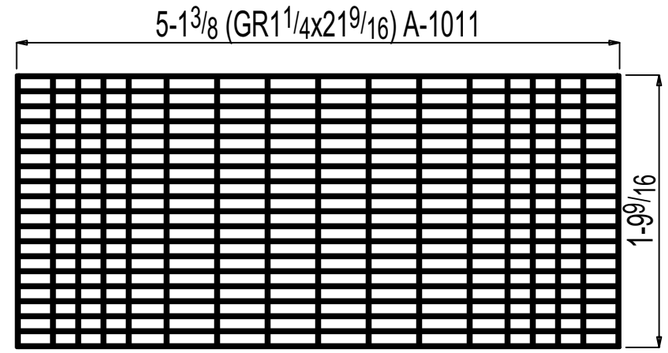

SPAN

ONE GRATING 9GT

GALV. NOTES:
1.ALL WELDS FOR STRENGTH ARE TO BE MADE AS SHOWN ON DETAILS.
2.IN ADDITION TO STRENGTH WELDS ALL MATERIAL IS TO BE SEAL WELD.
3.PROVIDE VENT HOLES AS REQUIRED.

BILL OF MATERIAL

SEQ #	QTY TOTAL	PC MARK	DESCRIPTION	LENGTH		REMARKS	WEIGHT TOTAL	ADVANCE MILL #
1	ONE	9GT	GRATING			GALV	88	
	1	9GT	GR1 1/4x21 9/16	5	1 3/8	A-1011	88	

OPEN HOLES ARE TO BE 13/16 UNLESS NOTED	WELDING ELECTRODE = E70XX U/N
FINISH U.N.O HOT DIPPED GALVANIZED	CLEANING : SSPC-SP6
MATERIAL U.N.O A36 PL,CH & AN - A500 B HSS - A992 WF-PIPE STD-A53	

REVISION	DATE	BY	DESCRIPTION
1	09-08-2023	MMR	ISSUED FOR FABRICATION
0	08-30-2023	MMR	ISSUED FOR APPROVAL

SUPERIOR METAL FAB

PROJECT: WONDERLOVE STAIRS
1300 SE 2ND AVE PORTLAND, OR 97214

ITEM: GRATING DETAIL

CONTRACTOR: ----
DETAILER: SUPERIOR METAL FAB
PROJECT MANAGER: JUSTIN
DR. BY: MMR DATE: 07-12-2023
CHK'D BY: KVR DATE: 07-12-2023
ERECTION REF.: E1
SCALE: NTS
JOB NO.: 220617
DWG. NO.: 9GT
0

City of Portland
Reviewed for Code Compliance
Date: 01/24/24
Permit #:
22-130202-DFS-01-CO

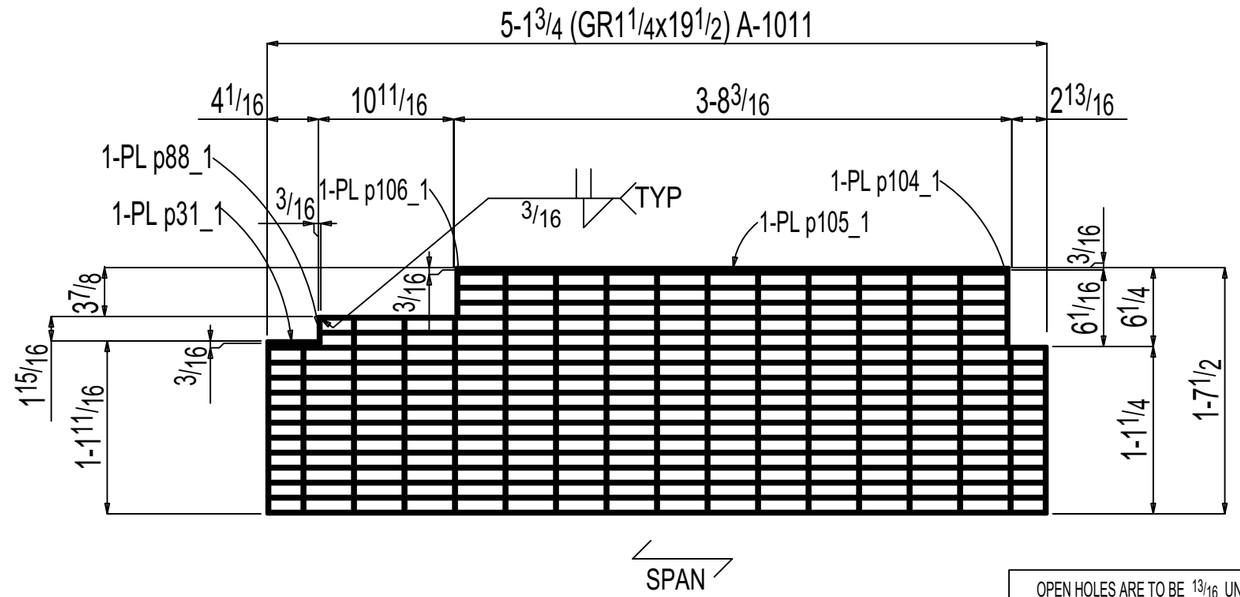

ONE GRATING 10GT

GALV. NOTES:
1.ALL WELDS FOR STRENGTH ARE TO BE MADE AS SHOWN ON DETAILS.
2.IN ADDITION TO STRENGTH WELDS ALL MATERIAL IS TO BE SEAL WELD.
3.PROVIDE VENT HOLES AS REQUIRED.

BILL OF MATERIAL

SEQ #	QTY TOTAL	PC MARK	DESCRIPTION	LENGTH		REMARKS	WEIGHT TOTAL	ADVANCE MILL #
1	ONE	10GT	GRATING			GALV	87	
	1	10GT	GR1 1/4x19 1/2	5	13/4	A-1011	83	
	1	p104_1	PL 3/16x1 1/4	0	6 1/16	A36	0	
	1	p106_1	PL 3/16x1 1/4	0	3 11/16	A36	0	
	1	p88_1	PL 3/16x1 1/4	0	1 15/16	A36	0	
	1	p105_1	PL 3/16x1 1/4	3	7 3/4	A36	3	
	1	p31_1	PL 3/16x1 1/4	0	4 1/4	A36	0	

City of Portland
Reviewed for Code Compliance
Date: 01/24/24
Permit #:
22-130202-DFS-01-CO

OPEN HOLES ARE TO BE 13/16 UNLESS NOTED		WELDING ELECTRODE = E70XX U/N
FINISH U.N.O	HOT DIPPED GALVANIZED	CLEANING : SSPC-SP6
MATERIAL U.N.O	A36 PL,CH & AN - A500 B HSS - A992 WF-PIPE STD-A53	

REVISION	DATE	BY	DESCRIPTION
0	09-08-2023	MMR	ISSUED FOR FABRICATION
A	08-30-2023	MMR	ISSUED FOR APPROVAL

SUPERIOR METAL FAB

PROJECT: WONDERLOVE STAIRS
1300 SE 2ND AVE PORTLAND, OR 97214

ITEM: GRATING DETAIL

CONTRACTOR: ----	DETAILER: SUPERIOR METAL FAB	PROJECT MANAGER: JUSTIN	
DR. BY: MMR DATE: 07-12-2023	CHK'D BY: KVR DATE: 07-12-2023	ERECTION REF.: E1	
SCALE: NTS	JOB NO.: 220617	DWG. NO.: 10GT	0

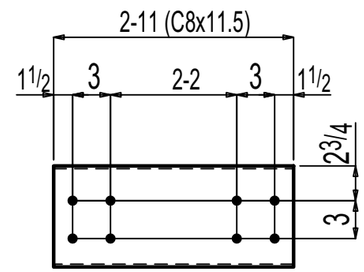

2 MISCS 11M

SHOP NOTE:
TOE DIRECTION FAR SIDE

GALV. NOTES:
1.ALL WELDS FOR STRENGTH ARE TO BE MADE AS SHOWN ON DETAILS.
2.IN ADDITION TO STRENGTH WELDS ALL MATERIAL IS TO BE SEAL WELD.
3.PROVIDE VENT HOLES AS REQUIRED.

BILL OF MATERIAL

SEQ #	QTY TOTAL	PC MARK	DESCRIPTION	LENGTH		REMARKS	WEIGHT TOTAL	ADVANCE MILL #
1	2	11M	MISC			GALV	67	
	2	11M	C8x11.5	2	11	A36	67	
			FIELD BOLTS					
	12		3/4 Dia A325	0	1 3/4	+1HD WASH		
	4		3/4 Dia A325	0	1 1/2	+1HD WASH		

OPEN HOLES ARE TO BE 13/16 UNLESS NOTED	WELDING ELECTRODE = E70XX U/N
FINISH U.N.O HOT DIPPED GALVANIZED	CLEANING : SSPC-SP6
MATERIAL U.N.O A36 PL,CH & AN - A500 B HSS - A992 WF-PIPE STD-A53	

REVISION	DATE	BY	DESCRIPTION
1	09-08-2023	MMR	ISSUED FOR FABRICATION
0	08-30-2023	MMR	ISSUED FOR APPROVAL

SUPERIOR METAL FAB

PROJECT: WONDERLOVE STAIRS
1300 SE 2ND AVE PORTLAND, OR 97214

ITEM: MISC DETAIL

CONTRACTOR: ----
DETAILER: SUPERIOR METAL FAB
PROJECT MANAGER: JUSTIN
DR. BY: MMR DATE: 07-12-2023
CHK'D BY: KVR DATE: 07-12-2023
ERECTION REF.: E1
SCALE: NTS
JOB NO.: 220617
DWG. NO.: 11M
0

City of Portland
Reviewed for Code Compliance
Date: 01/24/24
Permit #:
22-130202-DFS-01-CO

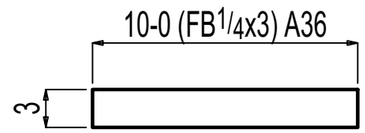

ONE PLATE 12M

GALV. NOTES:
1.ALL WELDS FOR STRENGTH ARE TO BE MADE AS SHOWN ON DETAILS.
2.IN ADDITION TO STRENGTH WELDS ALL MATERIAL IS TO BE SEAL WELD.
3.PROVIDE VENT HOLES AS REQUIRED.

BILL OF MATERIAL

SEQ #	QTY TOTAL	PC MARK	DESCRIPTION	LENGTH		REMARKS	WEIGHT TOTAL	ADVANCE MILL #
1	ONE	12M	PLATE			GALV	26	
	1	12M	FB1/4x3	10	0	A36	26	

OPEN HOLES ARE TO BE 13/16 UNLESS NOTED	WELDING ELECTRODE = E70XX U/N
FINISH U.N.O HOT DIPPED GALVANIZED	CLEANING : SSPC-SP6
MATERIAL U.N.O A36 PL,CH & AN - A500 B HSS - A992 WF-PIPE STD-A53	

REVISION	DATE	BY	DESCRIPTION
1	09-08-2023	MMR	ISSUED FOR FABRICATION
0	08-30-2023	MMR	ISSUED FOR APPROVAL

SUPERIOR METAL FAB

PROJECT: WONDERLOVE STAIRS
1300 SE 2ND AVE PORTLAND, OR 97214

ITEM: FLATBAR DETAIL

CONTRACTOR: ----
DETAILER: SUPERIOR METAL FAB
PROJECT MANAGER: JUSTIN
DR. BY: MMR DATE: 08-28-2023
CHK'D BY: KVR DATE: 08-28-2023
ERECTION REF.: E1
SCALE: NTS
JOB NO.: 220617
DWG. NO.: 12M
0

City of Portland
Reviewed for Code Compliance
Date: 01/24/24
Permit #:
22-130202-DFS-01-CO

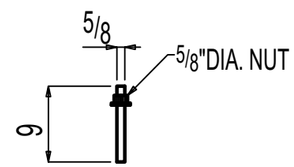

15 THREADED RODS 13M

GALV. NOTES:
1.ALL WELDS FOR STRENGTH ARE TO BE MADE AS SHOWN ON DETAILS.
2.IN ADDITION TO STRENGTH WELDS ALL MATERIAL IS TO BE SEAL WELD.
3.PROVIDE VENT HOLES AS REQUIRED.

BILL OF MATERIAL

SEQ #	QTY TOTAL	PC MARK	DESCRIPTION	LENGTH		REMARKS	WEIGHT TOTAL	ADVANCE MILL #
1	15	13M	THREADED ROD			GALV	12	
	15	13M	5/8" DIA. THREADED ROD	0	9	A36	12	
	15	blt3_1	5/8 NUT			HHNT A563		
	15	blt3_1	5/8 WASHER			HD F436		

OPEN HOLES ARE TO BE 13/16 UNLESS NOTED			WELDING ELECTRODE = E70XX U/N
FINISH U.N.O	HOT DIPPED GALVANIZED		CLEANING : SSPC-SP6
MATERIAL U.N.O	A36 PL,CH & AN - A500 B HSS - A992 WF-PIPE STD-A53		

REVISION	DATE	BY	DESCRIPTION
1	09-08-2023	MMR	ISSUED FOR FABRICATION
0	08-30-2023	MMR	ISSUED FOR APPROVAL

SUPERIOR METAL FAB

PROJECT: WONDERLOVE STAIRS
1300 SE 2ND AVE PORTLAND, OR 97214

ITEM: THREADED ROD DETAIL

CONTRACTOR: ----
DETAILER: SUPERIOR METAL FAB
PROJECT MANAGER: JUSTIN
DR. BY: MMR DATE: 08-28-2023
CHK'D BY: KVR DATE: 08-28-2023
ERECTION REF.: E1
SCALE: NTS
JOB NO.: 220617
DWG. NO.: 13M
0

City of Portland
Reviewed for Code Compliance
Date: 01/24/24
Permit #:
22-130202-DFS-01-CO

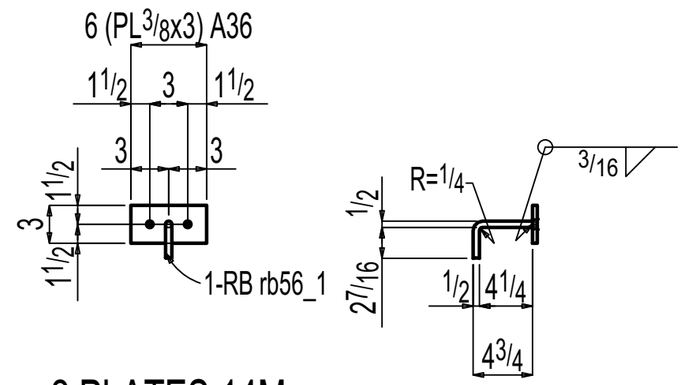

2 PLATES 14M

GALV. NOTES:
1.ALL WELDS FOR STRENGTH ARE TO BE MADE AS SHOWN ON DETAILS.
2.IN ADDITION TO STRENGTH WELDS ALL MATERIAL IS TO BE SEAL WELD.
3.PROVIDE VENT HOLES AS REQUIRED.

BILL OF MATERIAL

SEQ #	QTY TOTAL	PC MARK	DESCRIPTION	LENGTH		REMARKS	WEIGHT TOTAL	ADVANCE MILL #
1	2	14M	PLATE			GALV	5	
	2	14M	PL3/8x3	0	6	A36	4	
	2	rb56_1	RB1/2	0	67/8	A36	1	
			FIELD BOLTS					
	4		5/8 DIA HILTI KWIK	0	33/4	4" EMBEDMENT		
			BOLT TZ2 ANCHORS					

NEW SHEET

OPEN HOLES ARE TO BE 13/16 UNLESS NOTED		WELDING ELECTRODE = E70XX U/N
FINISH U.N.O	HOT DIPPED GALVANIZED	CLEANING : SSPC-SP6
MATERIAL U.N.O	A36 PL,CH & AN - A500 B HSS - A992 WF-PIPE STD-A53	

REVISION	DATE	BY	DESCRIPTION
0	09-07-2023	MMR	ISSUED FOR FABRICATION

SUPERIOR METAL FAB

PROJECT: WONDERLOVE STAIRS
1300 SE 2ND AVE PORTLAND, OR 97214

ITEM: THREADED ROD DETAIL

CONTRACTOR: ----	DETAILER: SUPERIOR METAL FAB	PROJECT MANAGER: JUSTIN
DR. BY: MMR DATE: 08-28-2023	CHK'D BY: KVR DATE: 08-28-2023	ERECTION REF.: E1
SCALE: NTS	JOB NO.: 220617	DWG. NO.: 14M 0

City of Portland
Reviewed for Code Compliance
Date: 01/24/24
Permit #:
22-130202-DFS-01-CO

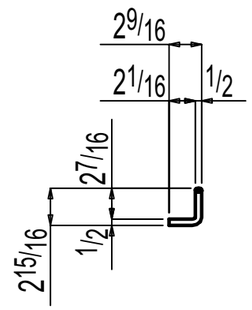

ONE ROUND BAR 15M

GALV. NOTES:
1.ALL WELDS FOR STRENGTH ARE TO BE MADE AS SHOWN ON DETAILS.
2.IN ADDITION TO STRENGTH WELDS ALL MATERIAL IS TO BE SEAL WELD.
3.PROVIDE VENT HOLES AS REQUIRED.

BILL OF MATERIAL

SEQ #	QTY TOTAL	PC MARK	DESCRIPTION	LENGTH		REMARKS	WEIGHT TOTAL	ADVANCE MILL #
1	ONE	15M	ROUND BAR			GALV	0	
	1	15M	RB 1/2	0	5 3/8	A36	0	

NEW SHEET

OPEN HOLES ARE TO BE 13/16 UNLESS NOTED		WELDING ELECTRODE = E70XX U/N
FINISH U.N.O	HOT DIPPED GALVANIZED	CLEANING : SSPC-SP6
MATERIAL U.N.O	A36 PL,CH & AN - A500 B HSS - A992 WF-PIPE STD-A53	

REVISION	DATE	BY	DESCRIPTION
0	09-07-2023	MMR	ISSUED FOR FABRICATION

SUPERIOR METAL FAB

PROJECT: WONDERLOVE STAIRS
1300 SE 2ND AVE PORTLAND, OR 97214

ITEM: THREADED ROD DETAIL

CONTRACTOR: -----	DETAILER: SUPERIOR METAL FAB	PROJECT MANAGER: JUSTIN
DR. BY: MMR DATE: 08-28-2023	CHK'D BY: KVR DATE: 08-28-2023	ERECTION REF.: E1
SCALE: NTS	JOB NO.: 220617	DWG. NO.: 15M 0

City of Portland
Reviewed for Code Compliance
Date: 01/24/24
Permit #:
22-130202-DFS-01-CO

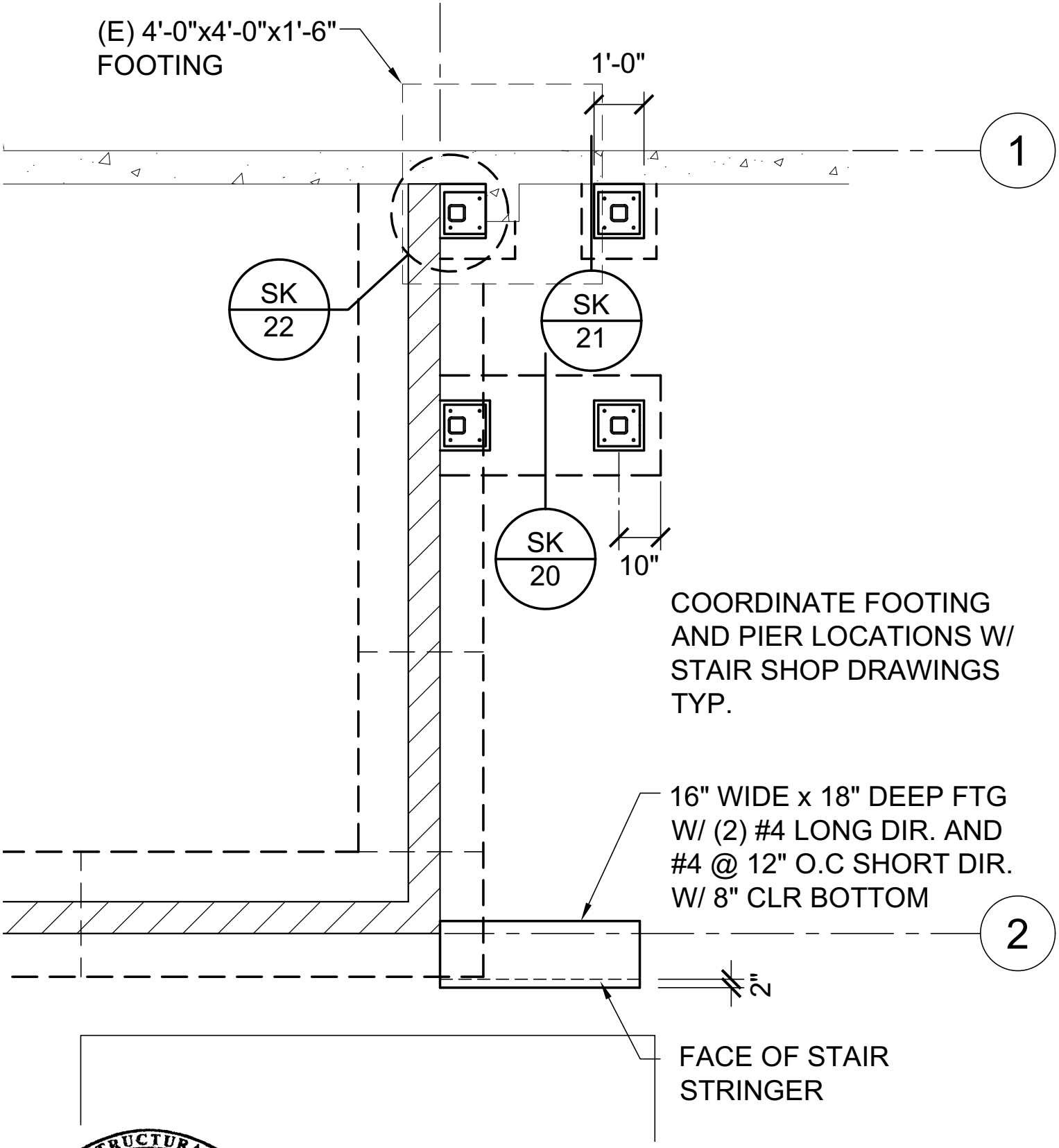

STRUCTURAL REGISTERED PROFESSIONAL ENGINEER 52799 OREGON JAN. 14, 2003 JAMES D. GIPE

EXPIRES: 06-30-2025

DETAIL: Stair Foundation Plan at East Side of Trash Enclosure
SCALE: 3/8"=1'-0"

Job Name:	Wonderlove	***Date:***	08/03/23
Job No.:	22011	***Drawn:***	JG
Client:	SEA	***Sheet:***	SK-19

City of Portland
Reviewed for Code Compliance
Date: 01/24/24
Permit #: 22-130202-DFS-01-CO

GIPE STRUCTURAL ENGINEERING
ph:503.460.5584 jim.gipe.engineering@gmail.com

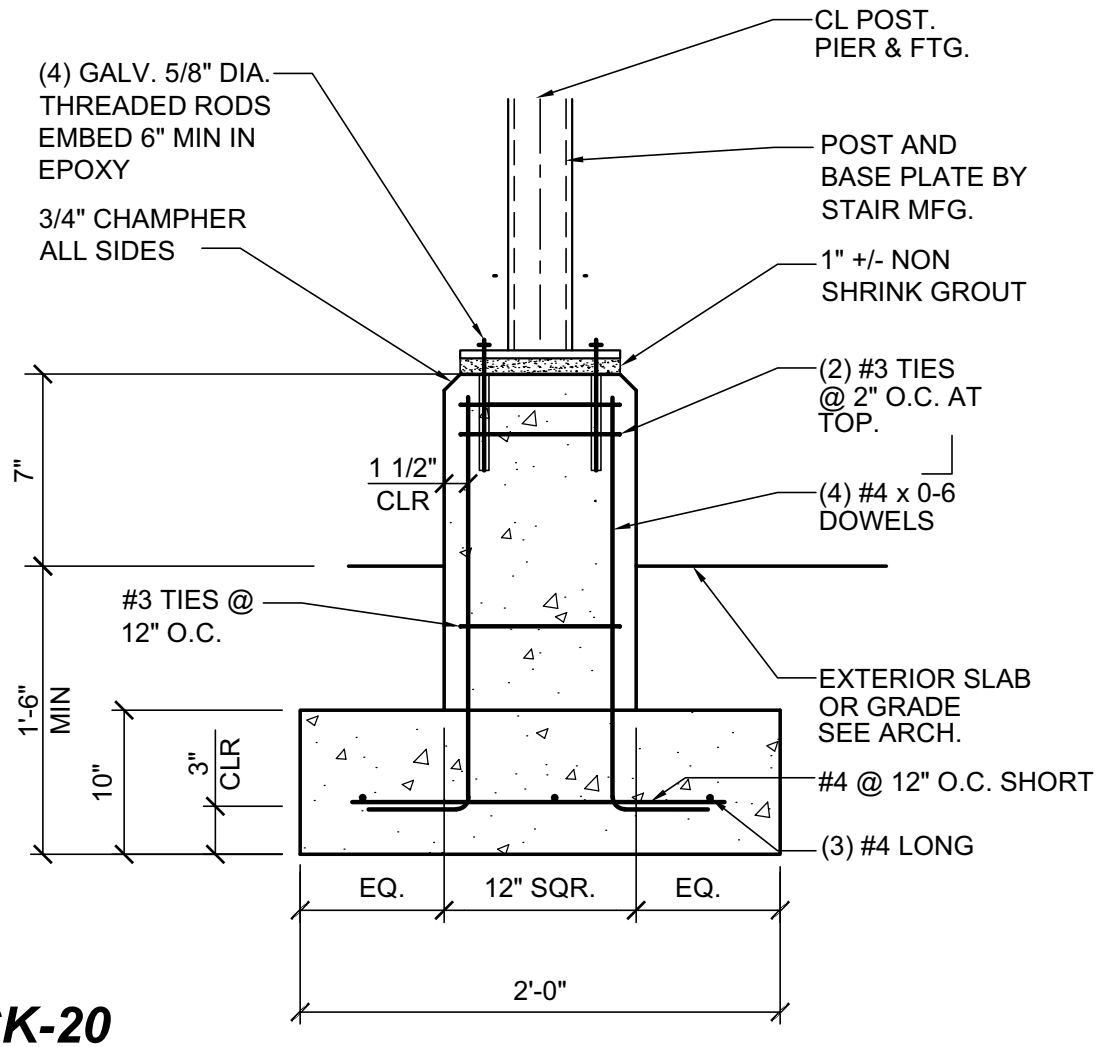

SK-20

SCALE: 1" = 1'-0"

STRUCTURAL REGISTERED PROFESSIONAL ENGINEER 52799 OREGON JAN. 14, 2003 JAMES D. GIPE

EXPIRES: 06-30-2025

DETAIL: Stair Footing
SCALE: 1"=1'-0"

Job Name:	Wonderlove	***Date:***	08/03/23
Job No.:	22011	***Drawn:***	JG
Client:	SEA	***Sheet:***	SK-20

City of Portland
Reviewed for Code Compliance
Date: 01/24/24
Permit #: 22-130202-DFS-01-CO

GIPE STRUCTURAL ENGINEERING
ph:541.460.5584 jim.gipe.engineering@gmail.com

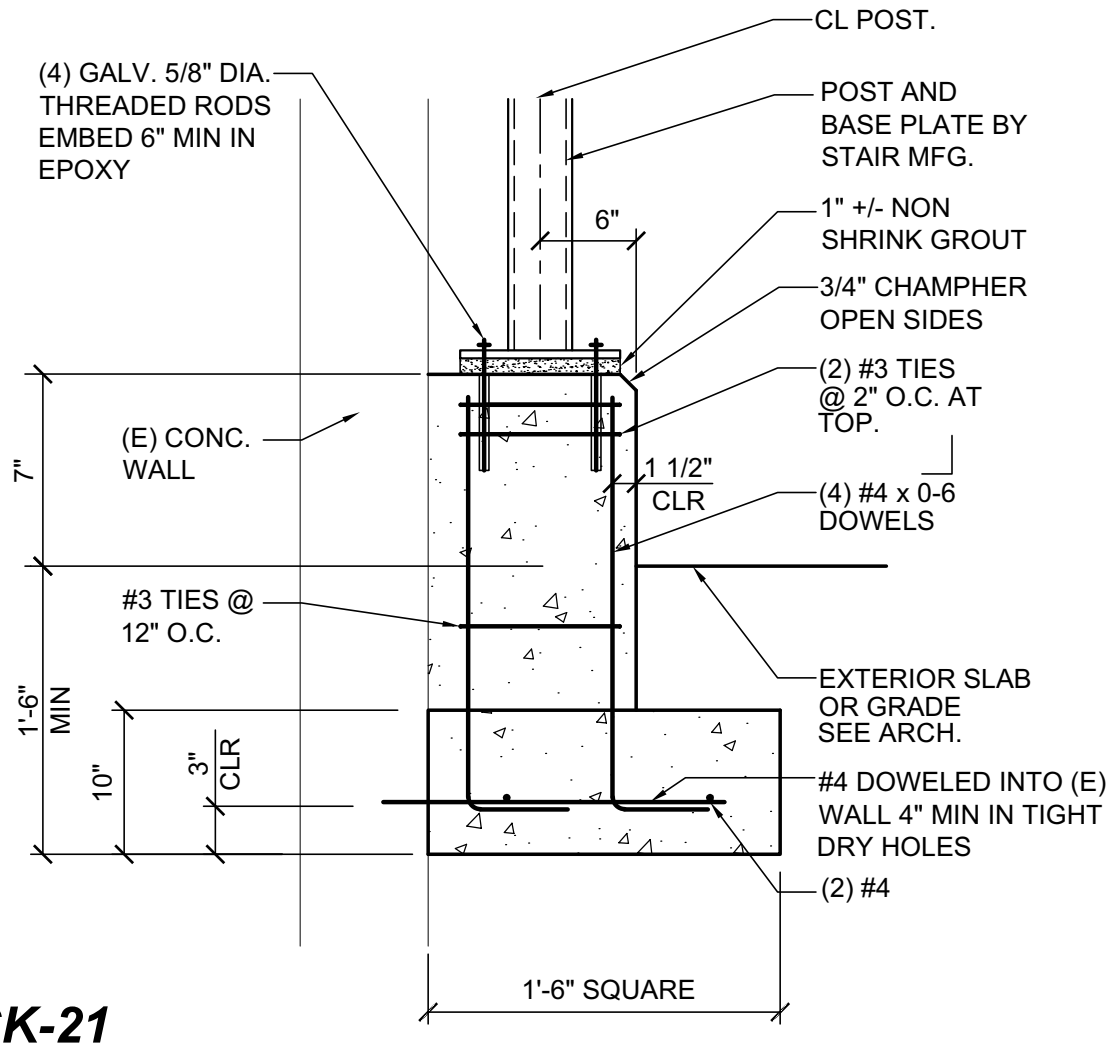

SK-21

SCALE: 1" = 1'-0"

EXPIRES: 06-30-2025

DETAIL:	Stair Footing		
SCALE:	1"=1'-0"		
Job Name:	Wonderlove	***Date:***	08/03/23
Job No.:	22011	***Drawn:***	JG
Client:	SEA	***Sheet:***	SK-21

City of Portland
Reviewed for Code Compliance
Date: 01/24/24
Permit #: 22-130202-DFS-01-CO

GIPE STRUCTURAL ENGINEERING
ph:541.460.5584 jim.gipe.engineering@gmail.com

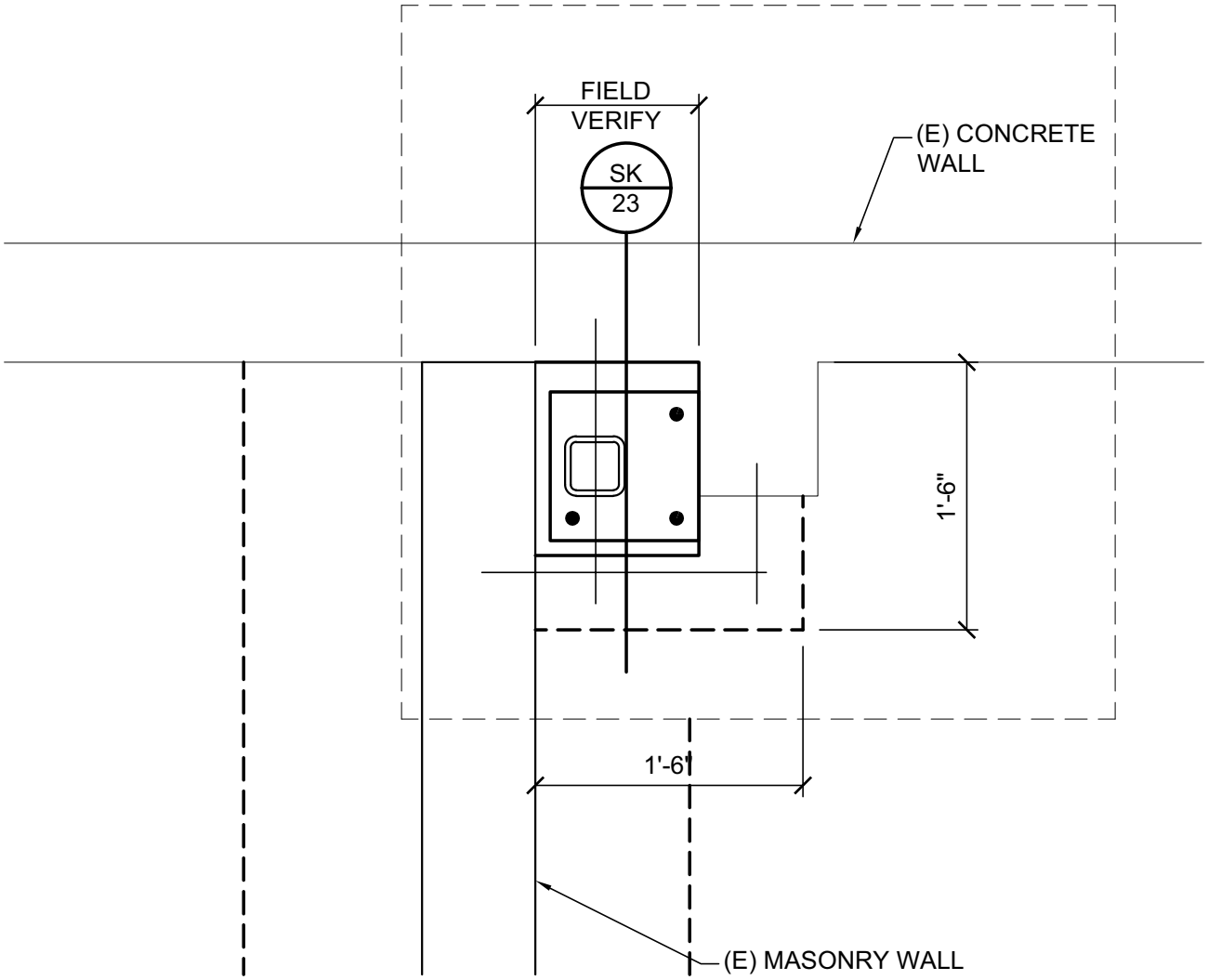

SK-22

PLAN VIEW

SCALE: 1" = 1'-0"

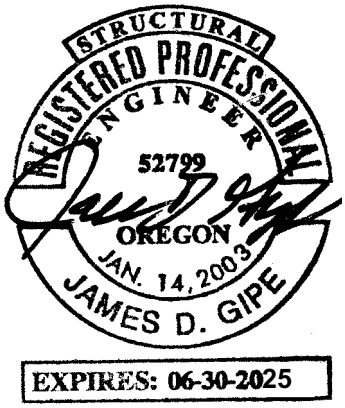

DETAIL:	Stair Footing		
SCALE:	1"=1'-0"		
Job Name:	Wonderlove	***Date:***	08/03/23
Job No.:	22011	***Drawn:***	JG
Client:	SEA	***Sheet:***	SK-22

City of Portland

Reviewed for Code Compliance

Date: 01/24/24

Permit #: 22-130202-DFS-01-CO

GIPE STRUCTURAL ENGINEERING

ph:541.460.5584 jim.gipe.engineering@gmail.com

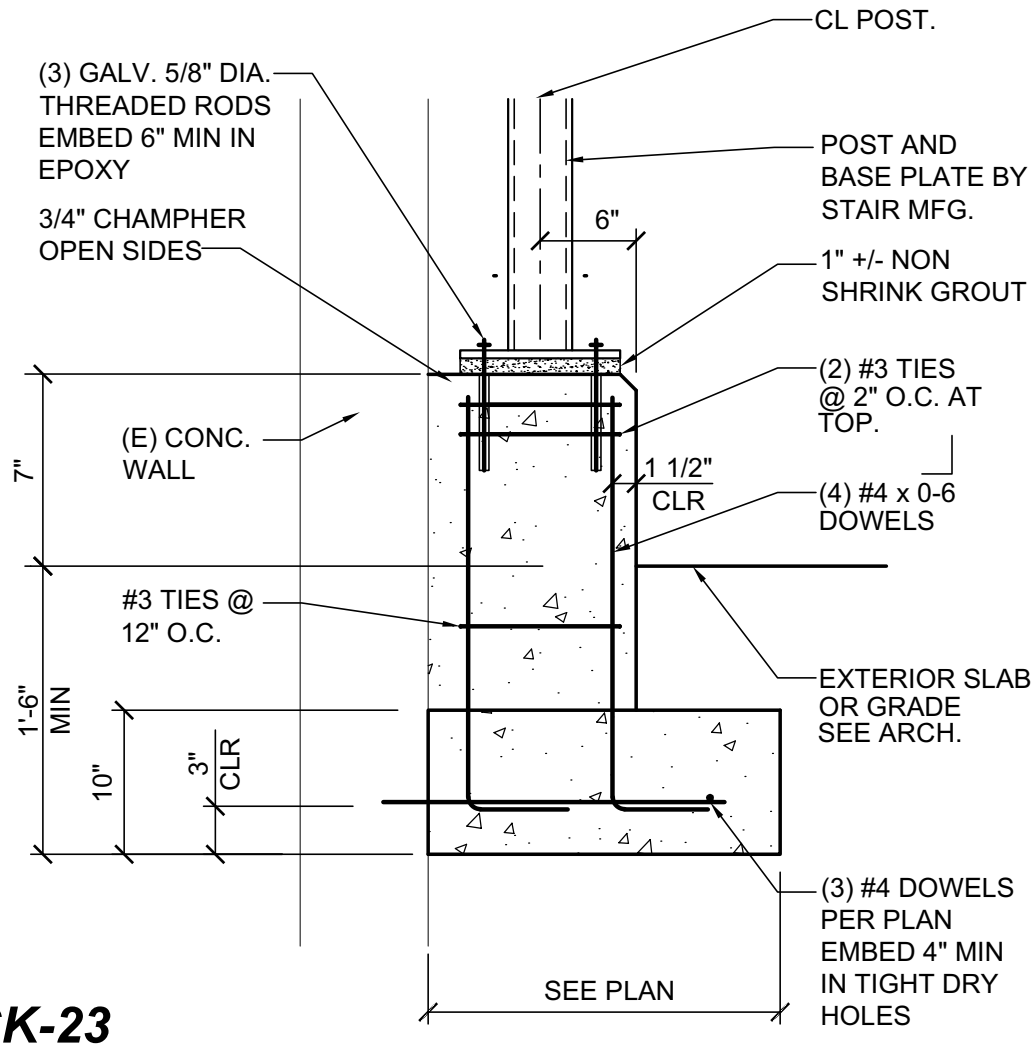

SK-23

SCALE: 1" = 1'-0"

STRUCTURAL REGISTERED PROFESSIONAL ENGINEER 52799 OREGON JAN. 14, 2003 JAMES D. GIPE

EXPIRES: 06-30-2025

DETAIL:	Stair Footing		
SCALE:	1"=1'-0"		
Job Name:	Wonderlove	***Date:***	08/03/23
Job No.:	22011	***Drawn:***	JG
Client:	SEA	***Sheet:***	SK-23

City of Portland
Reviewed for Code Compliance
Date: 01/24/24
Permit #: 22-130202-DFS-01-CO

GIPE STRUCTURAL ENGINEERING
ph:541.460.5584 jim.gipe.engineering@gmail.com