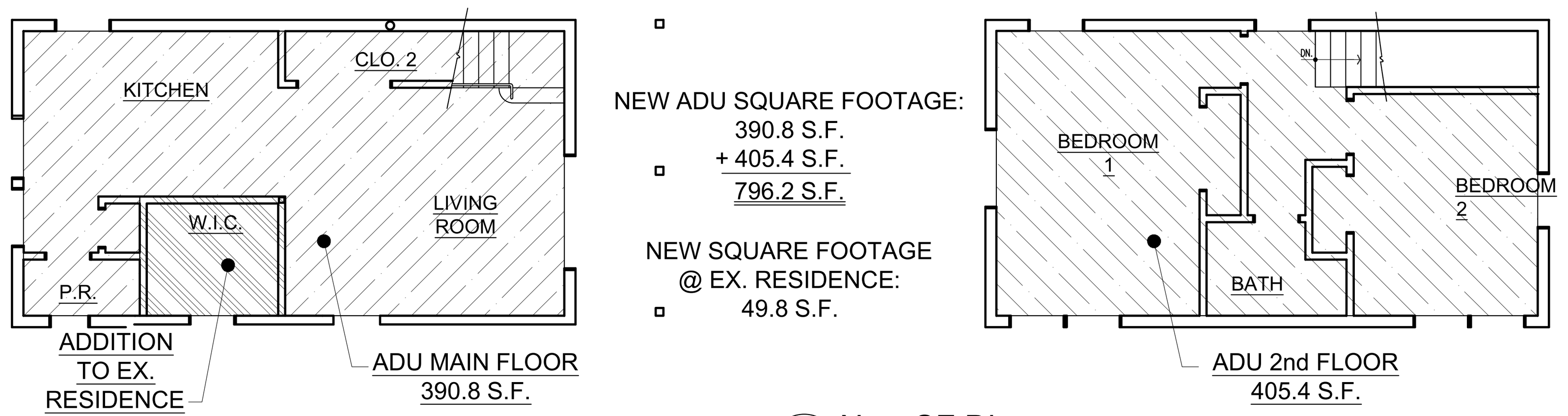

3 New SF Diagram
1/8" = 1'-0"

256.8 X 0.15=38.5 SQ. FT. GLAZING REQUIRED
2(24.6 S.F.)=49.2 S.F.
49.2<38.5 GLAZING OK

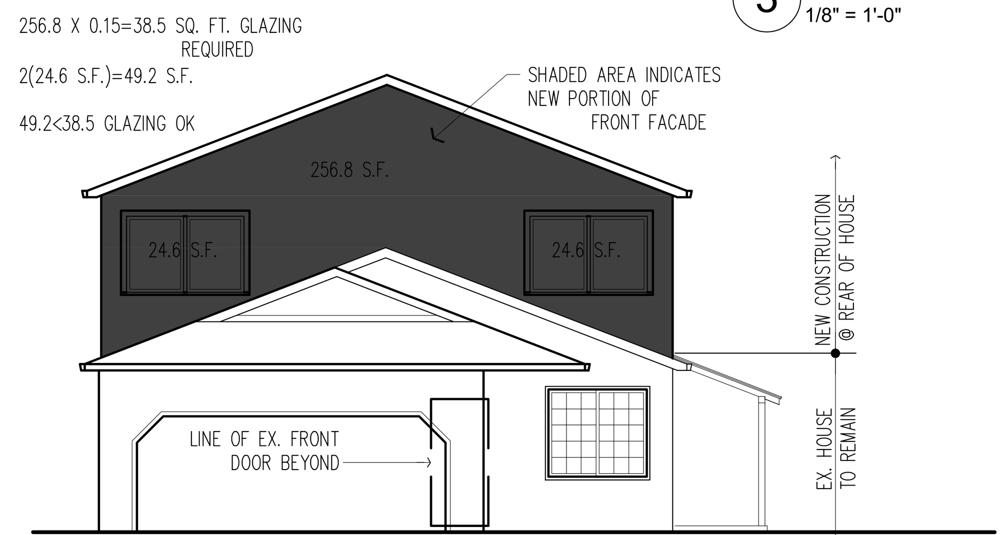

4 Front Glazing Calculation Diagram
1/8" = 1'-0"

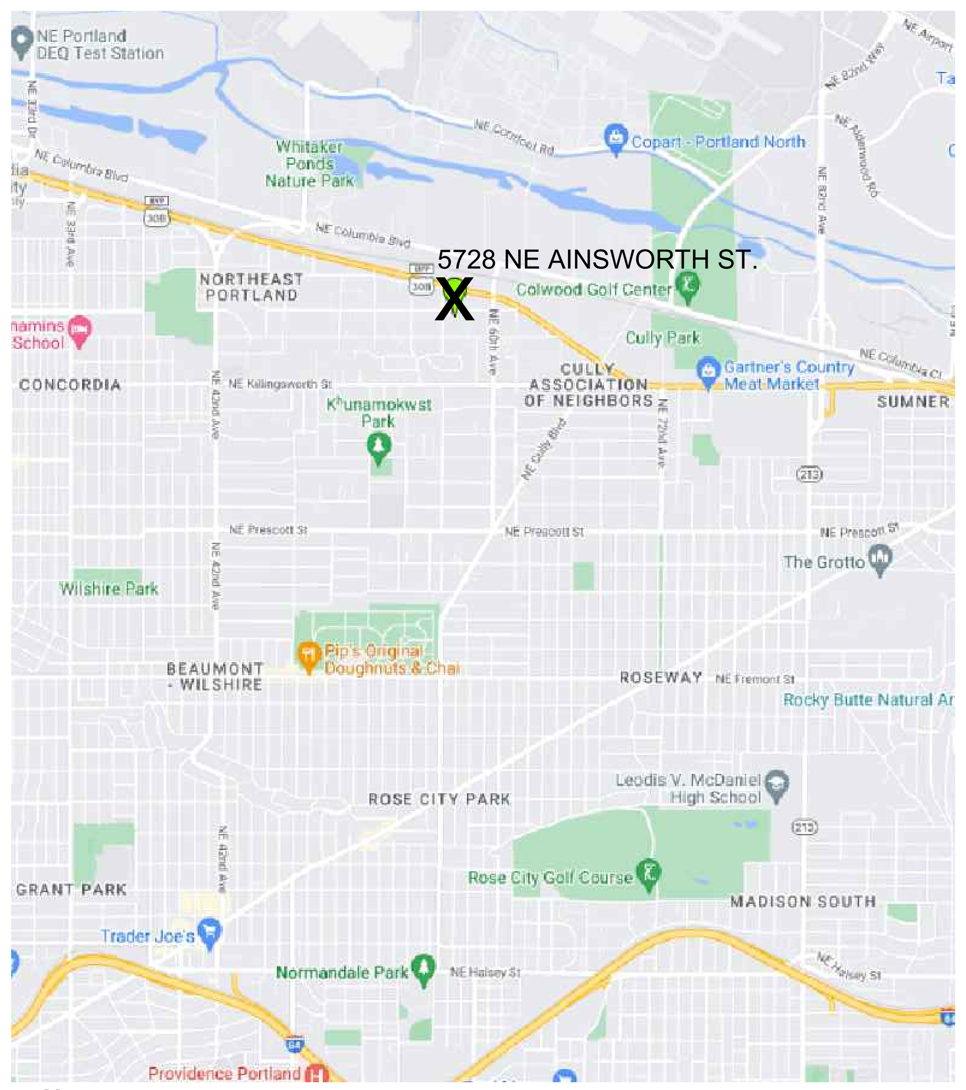

N
Vicinity Map
no scale

2 Existing Plan
1/8" = 1'-0"
N

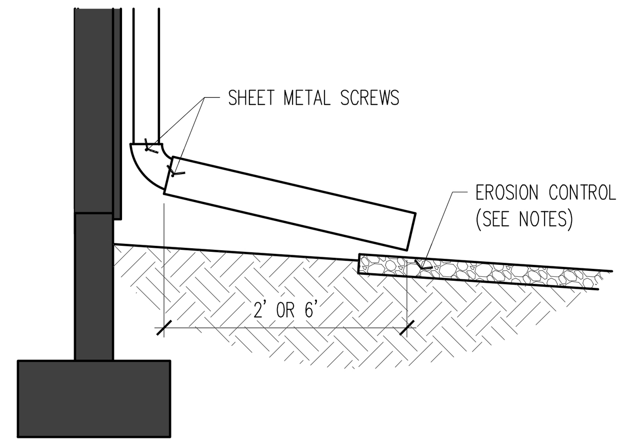

DOWNSPOUT NOTES
Setbacks: The end of the extension must be at least 6 feet from basement walls and at least 2 feet from crawl spaces and concrete slabs, and must be at least 5 feet from the property line possibly more if the landscape slopes toward the neighbor's property).

Do not discharge onto driveways, hardscape or other impervious areas including public sidewalks and streets.
Extension materials: Gutter-grade extension materials are required. Flexible hose is prohibited.
Entrance Erosion Control: Install river rock, flagstone, or similar materials to dissipate the energy of water discharged by the downspout. No erosion control is required ,if discharging to lawn. Plastic splash blocks are not allowed.

5 Downspout Notes and Detail
no scale

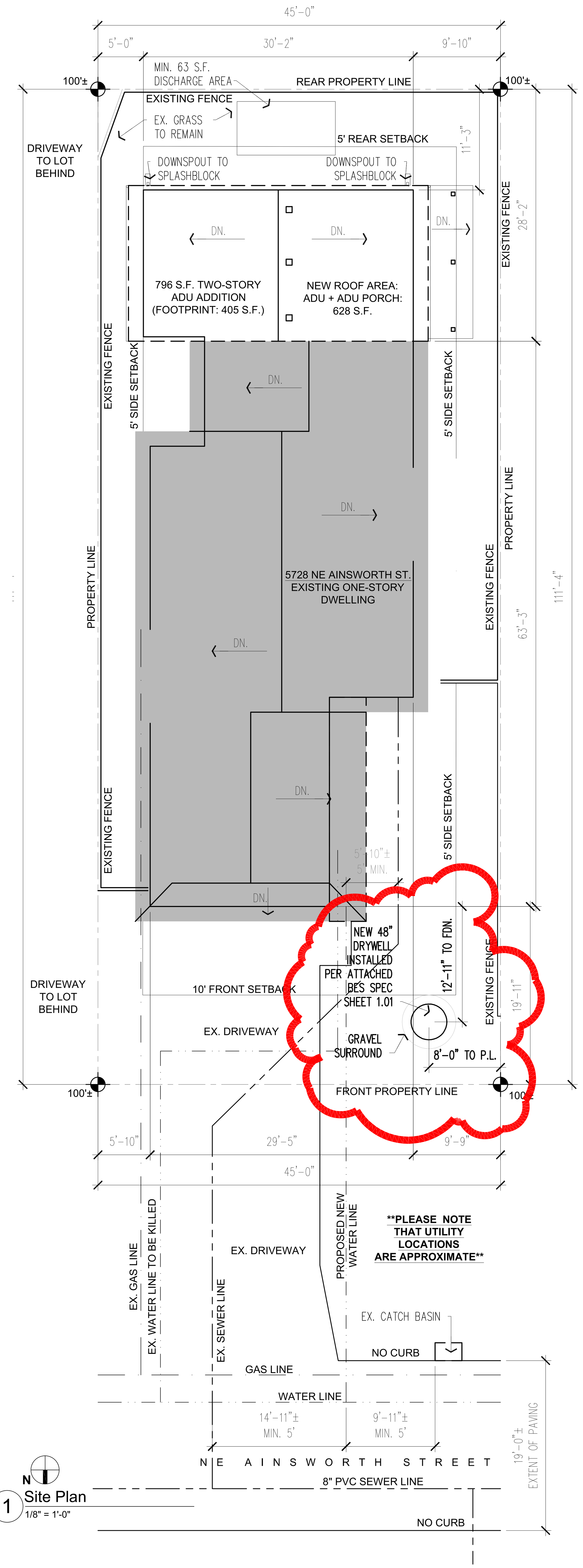

1 Site Plan
1/8" = 1'-0"

ABBREVIATIONS

A.B.	ANCHOR BOLT
ADA	AMERICANS W/ DISABILITIES ACT
ADJ.	ADJUSTABLE
ALUM.	ALUMINUM
APPROX.	APPROXIMATE
AC. PAV.	ASPHALT CONCRETE PAVING
BB HTR	BASEBOARD HEATER
BD.	BOARD
BLDG.	BUILDING
BLKG.	BLOCKING
B.O.	BOTTOM OF
B.O.C.	BOTTOM OF CONCRETE
BOT.	BOTTOM
C.B.	CATCH BASIN
C.J.	CONTROL JOINT
CLG.	CEILING
CLR.	CLEAR
CONC.	CONCRETE
CONST.	CONSTRUCTION
CONT.	CONTINUOUS
CO.J.	CONSTRUCTION JOINT
CW	COLD WATER
DBL.	DOUBLE
DTL.	DETAIL
DIA.	DIAMETER
DIM.	DIMENSION
DISP.	DISPENSER
DN.	DOWN
D.S.	DOWNSPOUT
DWG.	DRAWING
EA.	EACH
E.B.	EXPANSION BOLT
EF	EXHAUST FAN
E.J.	EXPANSION JOINT
EL.	ELEVATION
ELEC.	ELECTRICAL
ESB	ELECTRICAL SUPPLY BOX
EP	ELECTRICAL PANEL
EQ.	EQUAL
EXP.	EXPANSION
F.D.	FLOOR DRAIN
FDN.	FOUNDATION
FLR.	FLOOR
FLUOR.	FLUORESCENT
F.O.	FACE OF
FT.	FOOT OR FEET
FTG.	FOOTING
GA.	GAUGE
GALV.	GALVANIZED
G.B.	GRAB BAR
G.L.	GRID LINE
GWB	GYPSUM WALLBOARD
H.B.	HOSE BIB
HD	HOSE DROP
H.M.	HOLLOW METAL
HORIZ.	HORIZONTAL
HP	HEAT PUMP
HR.	HOUR
HT.	HEIGHT
HVAC	HEATING, VENTILATION, AIR COND.
HW	HOT WATER
I.D.	INSIDE DIAMETER
INCL.	INCLUDING
INFO.	INFORMATION
INSUL.	INSULATION
JT.	JOINT
L.P.	LIQUID PROPANE
MAX.	MAXIMUM
M.B.	MACHINE BOLT
MECH.	MECHANICAL
MFR.	MANUFACTURER
MIN.	MINIMUM
MISC.	MISCELLANEOUS
MIRR.	MIRROR IMAGE
M.O.	MASONRY OPENING
MTD.	MOUNTED
MTL.	METAL
N.I.C.	NOT IN CONTRACT
NOM.	NOMINAL
N.T.S.	NOT TO SCALE
O.A.	OVERALL
O.C.	ON CENTER
O.D.	OUTSIDE DIAMETER
O.F.C.I.	OWNER FURNISH, CONTRACTOR INSTALL
O.F.O.I.	OWNER FURNISH, OWNER INSTALL
OPP.	OPPOSITE
PERF.	PERFORATED
PJ.	PANEL JOINT
P-LAM.	PLASTIC LAMINATE
PLYWD.	PLYWOOD
PR.	PAIR
P.T.	PRESSURE TREATED
PT.	POINT
PTD.	PAINTED
RAD.	RADIUS
R.	RISER
R.B.	RUBBER BASE
R.D.	RAIN DRAIN
REQ'D.	REQUIRED
R.O.	ROUGH OPENING
SCHED.	SCHEDULE
S.D.	SOAP DISPENSER
SIM.	SIMILAR
S.M.D.	SEE MECHANICAL DRAWINGS
S.O.G.	SLAB ON GRADE
S.P.D.	SEE PLUMBING DRAWINGS
SPEC.	SPECIFICATIONS
SQ.	SQUARE
S.S.D.	SEE STRUCTURAL DRAWINGS
S.S.	STAINLESS STEEL
STD.	STANDARD
STRUCT.	STRUCTURAL
T.	TREAD
T.& B.	TOP & BOTTOM
T.B.	TOWEL BAR
T.C.	TOP OF CURB
TEL.	TELEPHONE
T.& G.	TONGUE & GROOVE
T.P.D.	TOILET PAPER DISPENSER
T.S.	TUBE STEEL
T.O.	TOP OF
TYP.	TYPICAL
T.O.W.	TOP OF WALL
U.L.	UNDERWRITER'S LABORATORY
UNF.	UNFINISHED
U.N.O.	UNLESS NOTED OTHERWISE
VAR.	VARIES
V.B.	VAPOR BARRIER
VFY.	VERIFY
VERT.	VERTICAL
W/	WITH
W.C.	WATER CLOSET
WD.	WOOD
W.H.	WATER HEATER
W/O	WITHOUT
WP.	WATERPROOF
W.R.	WATER RESISTANT
WT.	WEIGHT
&	AND
@	AT
#	POUND OR NUMBER
⅊	PLATE
℄	CENTER LINE
Ø	DIAMETER

MRAA:
PROJECT IS A MAJOR ADDITION.
NOTIFICATIONS ISSUED:
Email sent to Cully Association of Neighbors on 11/16/22
Neighbor notification delivery complete on 12/15/22

Street facade window and door calculations:
See 3/A1.0

ORSC Chapter 11 Energy Code: large addition per N1101.3: Option 4 from table N1101.1(2):
Advanced envelope:
Windows U-0.21, flat ceiling R-60, framed floors R-38, min R-5 insulation under slab

FAR: 0.6:1.0 (ADU)
3006 s.f. allowed
proposed square footage:
1592 s.f. (existing house and garage) +
96 s.f. (eave over 2' depth) +
49 s.f. new closet in ex. dwelling +
796 s.f. (new ADU)
2533 s.f. total < 3006 s.f. allowed

Lot coverage: (2251 s.f allowed)
1592 (existing house and garage) +
96 s.f. (eave over 2' depth) +
405 new
2093 s.f. total < 2251 s.f. allowed

DEFERRED SUBMITTAL: ROOF TRUSSES

5728 NE AINSWORTH ST
PORTLAND, OR 97218
Property ID: R197637
Tax Roll: KILLINGSWORTH GARDENS, BLOCK , E 45' OF W 95' OF N 111.33' OF LOT 2
State ID: 1N2E18DD 7600
New State ID: 1N2E18DD -07600
Alt Account: R454002230
Map Number: 2436 OLD
Total Land Area: 0.12 acres (5,010 sq ft)
Existing Building Area: 1,129 sq ft
ADU square feet: 796 sq. ft.
Zoning: R5

City Of Portland
REVIEWED FOR CODE COMPLIANCE
Date: 11/22/23
Permit #:
23-006986-REV-01-RS

Typical Insulation Values @ New Construction:
New Walls: Min. R21
New Roof: R-60 batt

Bureau of Environmental Services Notes:

- BES PRIVATE STORMWATER FACILITY INSPECTION REQUIRED
Note: BES Approval Required Prior to Occupancy
TO SCHEDULE, DIAL IVR at 503-823-7000
REQUEST #487 BES ON-SITE STORMWATER FACILITY FINAL
NEED ASSISTANCE? CONTACT BES at 503-823-7761 Option 2
- BDS INSPECTOR APPROVAL REQUIRED FOR DOWNSPOUTS AND PRIVATE STORM SEWER PIPING OUTSIDE OF STORM FACILITIES
- CONNECT TO EXISTING SANITARY DISPOSAL POINT ON PROPERTY WITH BDS INSPECTOR APPROVAL

PROJECT TEAM

CLIENTS - Cesar and Carmen Garcia
ARCHITECT - KIDD PANOSCHA ARCHITECTURE AND DESIGN
MAIRI KIDD AND JUERGEN PANOSCHA
phone 503.257.0069 mairi@kiddpanoscha.com
STRUCTURAL ENGINEER - Peter Kahn, Bridge City Engineering
phone 503.489.9390 pk@bridgecityengineering.com

CONTRACTOR - TBD
DRAWING INDEX
A1.0 SITE PLAN
GENERAL NOTES
A2.0 FLOOR PLANS, WINDOW AND DOOR SCHEDULES, BUILDING SECTION
A2.1 FULL MAIN FLOOR PLAN
A3.0 EXTERIOR ELEVATIONS,
M1.0 M/E/P PLAN
S0.1 GENERAL NOTES
S1.1 FRAMING PLANS
S3.1 DETAILS

SCOPE OF WORK
The Scope of Work includes but is not necessarily limited to the following general areas:

1. ADU Two story addition to rear of existing one story house. Includes kitchen, living room, half bath, full bath, two bedrooms with closets, plus walk-in closet in existing house bedroom.

GENERAL NOTES
1. Construction Documents consist of the drawings, structural drawings and calculations.
F
2. Typical new work dimensions are to face of framing unless noted otherwise. /typical existing conditions dimensions are to finished face unless noted otherwise.

3. Contractor and major subcontractors shall familiarize themselves with the construction site and verify locations of all utilities prior to commencing construction.

4. Contractor shall verify all conditions and dimensions at job site prior to commencing work and report any discrepancies to the Architect. In addition, Contractor shall review carefully all conditions and systems and become familiar with all aspects of the required work for a complete installation.

5. Contractor shall at all times keep premises clean and avoid accumulation of debris, waste materials or rubbish caused by his operation, and shall remove no less than weekly all debris generated by the project. All waste shall be separated by type for recycling.

6. All materials and work shall conform to all governing codes, regulations and agencies. No work shall be concealed until approved by local inspectors.

7. Contractor shall install and maintain all required safety barriers during construction as necessary to protect the public from injury and access to the construction zone.

8. Do not scale drawings. If dimensions are in question the Contractor shall be responsible for obtaining clarification from the Architect prior to continuing construction of area in question.

9. Any request for consideration by the Architect of substitutions of specified materials or products called for or shown on the drawings or included in the specifications shall be submitted to the Architect in writing for written approval by the Architect. Where the phrase "approved substitute" or "as approved by Architect" occurs in the Contract Documents, Contractor shall not assume that proposed substitutions will be approved as acceptable substitutes unless the item has been specifically approved by the Architect.

10. Mechanical and Electrical systems are Design-Build systems. Drawings are schematic to indicate design intent. Provide all items shown on the Drawings as well as those required for a complete code compliant installation. Contractor shall be responsible for the coordination of Mechanical and Electrical work consistent with the design criteria described in these documents. Coordinate ceiling framing with recessed lighting and heat fixture locations indicated on drawings. Recessed fixtures shall not be larger than 4" diameter unless approved in advance by Architect.

..\..\KPD\CAD Standards\Logo\kpad logo.png

Project
Garcia Residence ADU
5728 NE Ainsworth Street
Portland, OR 97218

Title
General Notes, Code Data
Vicinity Map, Site Plan

Scale: as noted

Date
04.24.23

Submissions/Revisions
PERMIT REV. 1 04.24.23
PERMIT REV. 2 06.13.23

Sheet no.
A1.0

23-006986-REV-01-RS

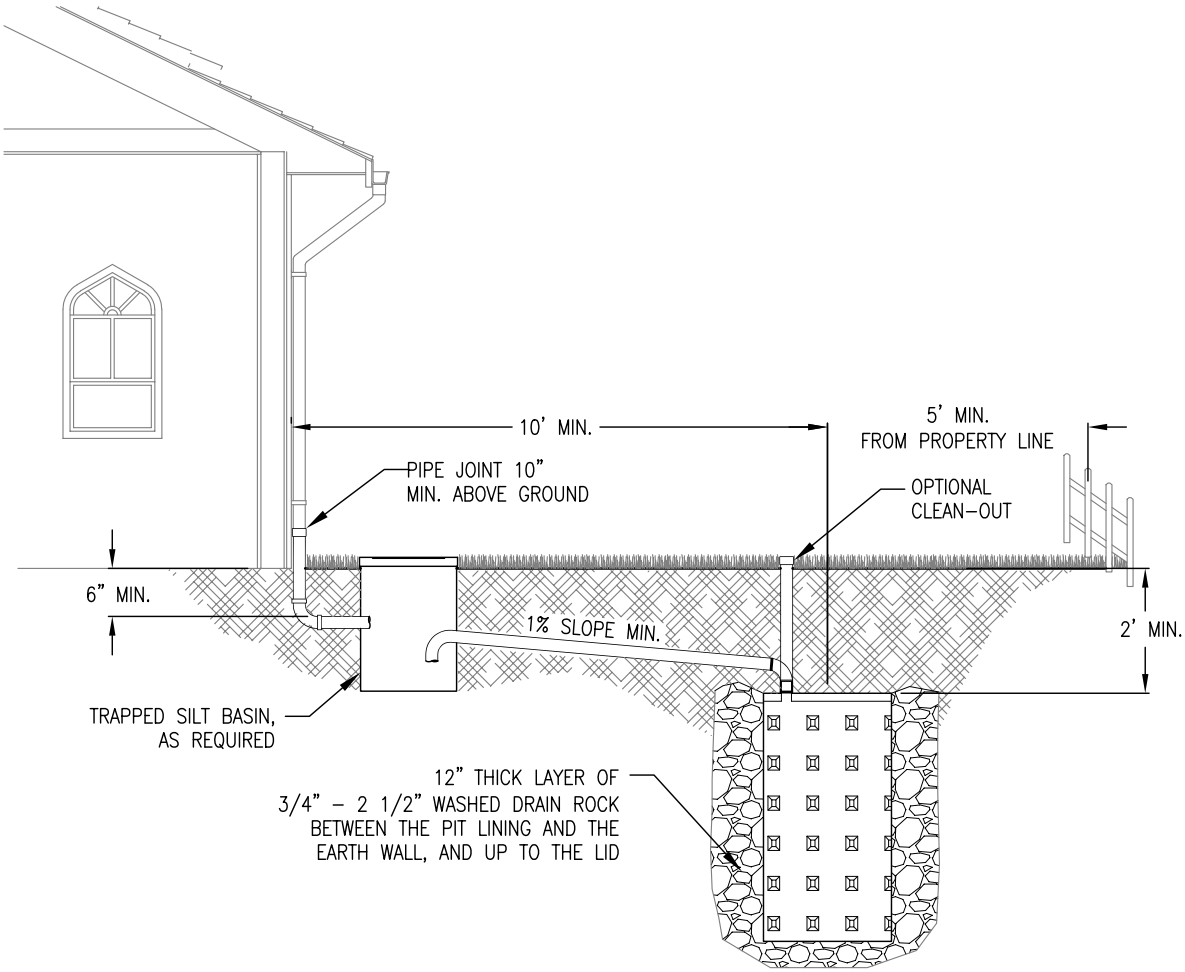

1. Sizing: See adjacent table to size the drywell(s) based on impervious area.
2. Siting Criteria: The base of the drywell must be at least 5' above seasonal high groundwater.
3. Setbacks: Measured from the center, the drywell must be 10' from foundations and 5' from property lines except next to the right-of-way where no setback is required between the edge of the drywell drain rock and the property line. The foundation setback is 8" for plastic mini-drywells.
4. Piping: Conform with Oregon Plumbing Specialty Code (OPSC) requirements.
5. Access: In residential settings, an access cleanout is optional but highly recommended.
6. Pre-Treatment: A trapped silt basin such as a sumped catch basin is required except for drywells managing roof runoff and runoff from pedestrian-only areas.
7. The top of the perforated drywell sections must be lower than neighboring foundations.
8. Inspections: Call BDS IVR inspection line, (503) 823-7000. Request 487.3 inspections required.

Drywell Depth	Maximum Catchment Area Managed by One Drywell	
	28" diameter	48" diameter
5'	1000 sf	2500 sf
10'	2500 sf	4500 sf
15'	3500 sf	5000 sf
2x2 plastic mini-drywell (maximum of 2 drywells per catchment)	500 sf	

CONSTRUCTION REQUIREMENTS

Smearing the soil surface during excavation can limit infiltration rates. If smooth excavation tools are used, roughen the sides and bottom of the excavation with a sharp pointed tool. Remove loose material from the bottom of the excavation.

– DRAWING NOT TO SCALE –

Bureau of Environmental Services

STORMWATER MANAGEMENT
TYPICAL DETAILS FOR
PRIVATE PROPERTY

DRYWELL

SW–180

9–2–20

SIMPLIFIED DESIGN APPROACH

Date:
Permi
23-00

IVR# 4981009 10.23.23

SHEET 1.01