POTTER
The Symbol of Protection

RD13

Residential Riser

Features

- Pre-assembled and pressure tested
- Available in 1",1 1/4", 1 1/2", & 2" nominal pipe size models
- Female adapter ships loose so riser can be installed in a confined space
- Fits in standard 2X4 construction walls

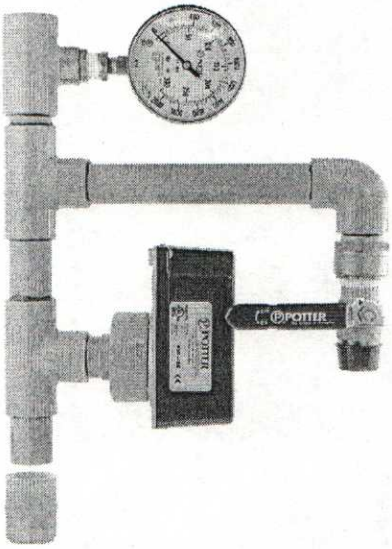

⚠ WARNING

- Installation must be performed by qualified personnel and in accordance with all national and local codes and ordinances.
- Shock hazard. Disconnect power source before servicing. Serious injury or death could result.
- Risk of explosion. Not for use in hazardous locations. Serious injury or death could result.

Description

The RD13 Riser (with NPT connectors) is constructed from Listed CPVC products suitable for fire sprinkler services subject to the limitations and installation requirements of Flameguard® CPVC pipe and Spears® CPVC fittings. The RD13 Riser incorporates a VSR-SG flow switch, gauge, and drain/test valve. The VSR-SG flow switch is equipped with union connection to facilitate the installation and removal of the switch in confined spaces.

Installation

1. Using appropriate sealant, thread the female adapter on to the main water supply. Then glue the riser assembly to the female adapter. Pipe the drain connection to an adequate drain location capable of handling the drain discharge. The riser can be mounted in the horizontal or vertical position. Direction of flow is indicated in Fig. 1. The waterflow switch must be located on the top or on the side of the pipe when installed in the horizontal position. This will prevent debris from entering the throat of the waterflow switch which could interfere with proper operation.
2. Following CPVC manufacturer's instructions for preparation and gluing of CPVC piping systems, glue the main riser to the main supply line for the sprinkler heads. *NOTE:* All glued connections must be completed and cured before the flowswitch is installed. (Continued on page 2).

⚠ CAUTION

Do not over-tighten the union nut, hand tighten only. Use of a wrench may cause damage to the union nut.

Flow Switch Technical Specifications

Dimensions	See Fig 2
Service Pressure	175 PSI (12,07 BAR) - UL
Flow Sensitivity Range for Signal	4-10 GPM (15-38 LPM) - UL
Maximum Surge	18 FPS (5.5 m/s)
Contact Ratings	Two sets of SPDT (Form C) 10.0 Amps at 125/250VAC 2.0 Amps at 30VDC Resistive10 mAmps min. at 24VDC Resistive 10 m Amps min. at 24V DC
Environmental Limitations	Temperature range: 40°F-120°F (4.5°C-49°C)-UL
Conduit Entrances	Two knockouts provided for 1/2" conduit
Listings	UL, CUL CSFM Listed, and CE Marked

Specifications subject to change without notice

Service Use

Automatic Sprinkler NFPA-13
One or two family dwelling NFPA-13D
Residential occupancy up to four stories NFPA-13R
National Fire Alarm Code NFPA-72
British Standard BS9251

Dimensions (See Chart Below)

Fig 2

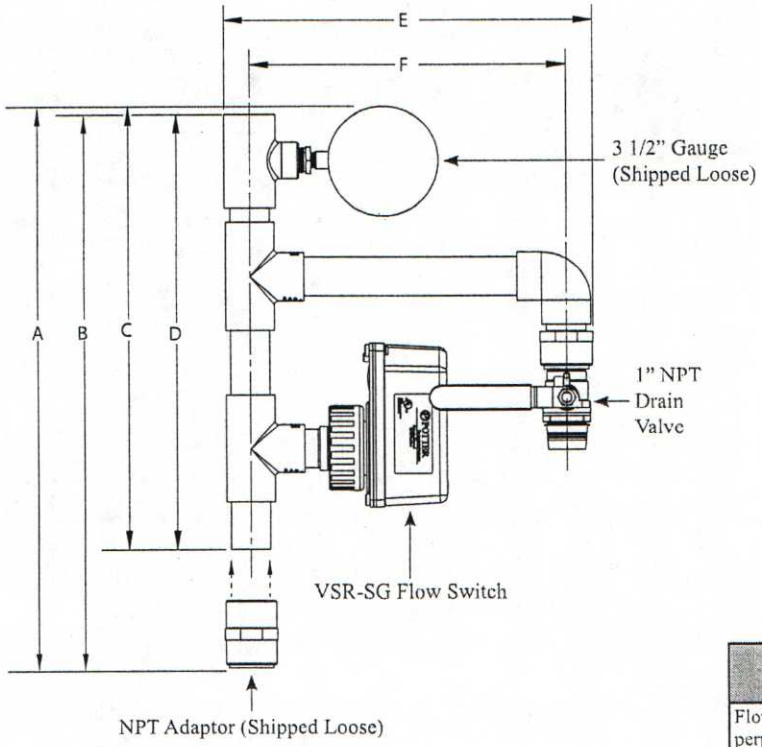

Orientation

Fig 3

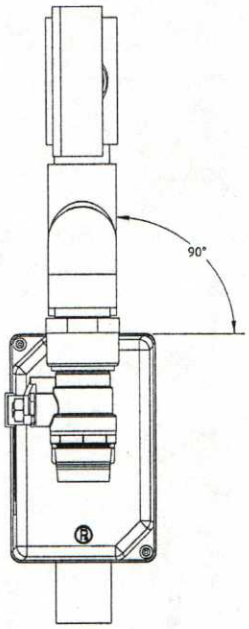

⚠ CAUTION

Flow switch must be properly orientated. Side of cover must be perpendicular with the pipe. Improper orientation could delay or prevent notification of waterflow.

*RD13 Risers (ASSEMBLED DIMENSIONS)														
Riser Size	Model Number	Part Number	Dimension "A"		Dimension "B"		Dimension "C"		Dimension "D"		Dimension "E"		Dimension "F"	
			(in.)	*(mm.)*	*(in.)*	*(mm.)*	*(in.)*	*(mm.)*	*(in.)*	*(mm.)*	*(in.)*	*(mm.)*	*(in.)*	*(mm.)*
1"	RD13-100-1	1119067	16	406	15 3/4	400	14 7/8	378	14 5/8	371	12 1/4	311	10 1/2	267
1 1/4"	RD13-125-1	1119077	16 5/8	422	16 1/2	419	15 1/2	394	15 3/8	391	12 1/2	318	10 5/8	270
1 1/2"	RD13-150-1	1119087	N/A	N/A	16 3/4	425	N/A	N/A	15 5/8	397	12 3/4	324	10 3/4	273
2"	RD13-200-1	1119097	N/A	N/A	18 1/4	464	N/A	N/A	16 7/8	429	13 3/8	340	11 1/8	283

Ordering Information

Ordering Information		
Nominal Pipe Size	Model	Part Number
1"	RD13 Riser	1119067
1 1/4"	RD13 Riser	1119077
1 1/2"	RD13 Riser	1119087
2"	RD13 Riser	1119097

Optional: Cover Tamper Switch Kit, stock no. 0090148
Replaceable Components: Retard/Switch Assembly, stock no. 1029030
Gauge, Flow Switch, and NPT Adapter shipped loose in box.