SKANSKA

FROM: **Ryan Bradley**

SUBJECT: **078100-1.1 Applied Fire Protection**

DATE: **5/3/2023**

Please see attached 078100-1.1 Applied Fire Protection Submittal.

BORA ARCHITECTS, INC.
Reviewed for Conformance With Design Concept
By: Lina Naven

No Exceptions Taken ☐
Make Corrections Noted ☒
Nonconforming - Resubmit ☐

Phone: 503-226-1575

UL Types differ from those indicated on A002 & A005 as updated in ASI 005 and as approved by City: ULD902 for floor types F11 & F15. Listed within the submittal is ULD925.

Credit should be provided to the Owner for entry canopy scope removed in ASI 005 Plan Check Comments and other fireproofing scope omitted between initial submittal and revised submittal (fall arrest posts and penthouse screen wall).

-LBN Bora 05/26/2023

SKANSKA USA BUILDING, INC.

Date Rec'd	To Arch	From Arc	Returned
5/3/23	5/3/23		

Corrections Noted:

Revise & Resubmit:

This submittal REVIEW shall not be construed as a complete check and indicates only that information presented conforms generally with the Contract Documents. In no case is Subcontractor or Supplier relieved of full responsibility for adherence to the Contract Documents and satisfactory construction of all work. Submitted to Owner, Architect-Engineer, for final approval.

Name: Ryan Bradley Date: 5/3/23

This submittal has been reviewed with no additional comments by PSU

Cameron Patterson 5-8-2023

Regards,
Skanska USA Building Inc.

Ryan Bradley

Ryan Bradley
Project Engineer

SUBMITTAL

To:

Skanska

Project:

PSU Vernier Science Center

Date:

3.3.23
***Revised 5.1.23**

SPECIFICATION SECTION
078100 Applied Fire Protection

local: 503.620.1600 toll free: 800.783.0315 fax: 503.624.5781 | 26055 SW Canyon Creek Road, Wilsonville, OR 97070
www.wpibuilds.com
OR: 60330 | WA: WESTEPI172P6 | NV: 0080775

TABLE OF CONTENTS

This table is categorized to match the specification section, parts, paragraphs and items.

Page	Submittals	Comments
1	Cover Sheet	
2	Table of Contents	
3	Fireproofing Submittal Notes	
4-5	Product Data	
6-7	Certificate of Compliance	
8-15	Test Reports	
16-22	Shop Drawings	
23-50	UL Designs & Thickness Tables	
51	Approved Applicator	

PSU Vernier Science Center

Fireproofing Submittal Notes

PRODUCT

- We are submitting to apply the following fireproofing products at structural members as indicated on included shop drawings:
  - **GCP Retro-Guard RG Fireproofing** (Retro-Guard is tinted blue and allows easy identification for where new fireproofing has been applied. It is designed to be used when lock-down products are used in abatement situations, and can be used as new application as well.)

UL TESTING

- **Protected Floor:**

UL D925 – submitted for 2-hour floor assembly with 4 ½" concrete.
UL N852 – submitted for 2-hour beams into D925.

- **Columns:**

UL Y710 – submitted for 2-hour columns.

UL TYPES DIFFER FROM A002 & A005 UPDATED IN ASI 005: ULD902 USED FOR FLOOR TYPES F11 & F15 IN DRAWINGS APPROVED BY THE CITY. CONTRACTOR TO ENSURE THAT DESIGN IS EQUIVALENT.

GENERAL NOTES

Please reference submitted documentation and drawings for thickness requirement and application intent for further clarification.

Abatement Repair identified only for reference to patch existing where necessary.

All steel that is to receive spray applied fireproofing should be raw, unprimed, and unpainted.

If you should have any questions, please feel free to call me direct at (503)-502-2309

Sincerely,

Jeremiah Carlson

Fireproofing Department PM/Estimator

gcp applied technologies

RETRO-GUARD® RG
Replacement fireproofing

Designed to meet all IBC Bond Strength Requirements

Product Description

Retro-Guard® RG replacement fireproofing is a single component, mill-mixed gypsum plaster based product which requires only the addition of water on the job site to form a consistent, pumpable slurry. RG can be used on structural steel columns, beams, joists, trusses, flat plate cellular and fluted decking.

Features & Benefits

Retro-Guard Cementitious Fireproofing has been specifically developed by Grace Construction Products to meet the needs of the fireproofing respray contractor. Retro-Guard offers the following advantages:

- **Adjustable Bond Strengths** - can be applied to reach over 1,000 psf when applied at densities at or above 18 pcf.
- **Quick set**—in 7 to 10 minutes with the use of Monokote® Accelerator and Injection System
- **Less overspray**—work close to steel, less cleanup
- **No noxious fumes** or irritating particulates released during or after application
- **Hard** durable surface
- **Fully UL fire tested** and classified for use with the most post-removal lock downs in the industry
- **Dries to a light blue color**—easily identified and differentiated

Materials

a. Material shall be Retro-Guard RG replacement fireproofing as manufactured by GCP Applied Technologies.

b. Mixing water shall be clean, fresh and suitable for domestic consumption, and free from such amounts of mineral or organic substances as would affect the set of the fireproofing material.

c. Lock down agents shall be UL Classified for use with Retro-Guard RG. Refer to the ULI Fire Resistance Directory current edition for products listed with Retro-Guard under Classification Category CBUI.

Delivery & Storage

a. All material to be used for fireproofing shall be delivered in original unopened packages bearing the name of the manufacturer, the brand and the proper Underwriters Laboratories Inc. identification.

Mixing

a. Retro-Guard shall be mixed by machine in a conven-tional plaster type mixer or a continuous mixer specifically modified for cementitious fireproofing. The mixer shall be kept clean and free of all previously mixed material. The mixer speed in a conventional mixer shall be adjusted to the lowest speed which gives adequate blending of the material and a mixer density of 40–45 pcf (640–720 kg/m^3) of material.

b. Using a suitable metering device and a conventional mixer, all water shall be first added to the mixer as the blades turn. Where possible, the mixer blades shall then be stopped and all the Retro-Guard fire-proofing added. The mixer blades shall then be restarted. If the mixer blades are left running, Retro-Guard should be added to the mixer as quickly as possible. Mixing shall continue only until all material is thoroughly wet and no lumps remain. Target density of 43 ± 1 pcf (688 ± 16 kg/m^3) is most desir-able. Overmixing Retro-Guard will reduce pumping rate and will adversely affect final in-place density and hangability. Undermixing Retro-Guard will nega-tively affect in-place density and yield.

Steel Surfaces

a. Prior to the application of Retro-Guard an inspection shall be made to determine that all steel surfaces are acceptable to receive fireproofing. The steel to be

Performance Characteristics

Physical Properties	Recommended Specification	Typical Values	Test Method
Dry density, minimum average	15 pcf (240 kg/m^3) 18 pcf (288 kg/m^3)	15 pcf (240 kg/m^3) 18 pcf (288 kg/m^3)	ASTM E605
Bond strength	430 psf (20.6 KPa) at 15 pcf 1,000 psf (47.9 KPa) at 18 pcf	883 psf (42.3 KPa) at 15 pcf 1,527 psf (73.1 KPa) at 18 pcf	ASTM E736 ASTM E736
Compression, 10% deformation	1,200 psf (51 KPa)	1,440 psf (68.9 KPa)	ASTM E761
Air erosion	Max 0.000 g/ft^2 (0.00 g/m^2)	0.000 g/ft^2 (0.00 g/m^2)	ASTM E859
High velocity air erosion	No continued erosion after 4 hours	No continued erosion after 4 hours	ASTM E859
Corrosion	Does not contribute to corrosion	Does not contribute to corrosion	ASTM E937
Bond impact	No cracking, spalling or delamination	No cracking, spalling or delamination	ASTM E760
Deflection	No cracking, spalling or delamination	No cracking, spalling or delamination	ASTM E759
Resistance to mold growth	No growth after 28 days	No growth after 28 days	ASTM G21
Surface burning characteristics	Flame spread = 0 Smoke developed = 0	Flame spread = 0 Smoke developed = 0	ASTM E84
Combustibility	Less than 5 MJ/m^2 total, 20 kw/m^2 peak heat release	Less than 5 MJ/m^2 total, 20 kw/m^2 peak heat release	ASTM E1354
Impact penetration	Max 6 cm^3 abraded	3.3 cm^3	City of San Francisco
Abrasion resistance	Max 15 cm^3 abraded	8.3 cm^3	City of San Francisco

fireproofed shall be free of oil, grease, excess rolling compounds or lubricants, loose mill scale, rust or any other substance that will impair proper adhesion. Where necessary, the cleaning of steel surfaces to receive fireproofing shall be the responsibility of the abatement contractor, or general contractor.

b. The project architect shall determine if the painted/primed steel or lock down agent on the steel to receive fireproofing have been tested in accordance with ASTM E119, to provide the required fire resistance rating.

c. Many Fire Resistance Designs allow the use of painted metal floor or roof deck in place of galva-nized decking. Painted decking must be UL listed in the specific fire resistance designs and must carry the UL classification marking. Consult your local Grace sales representative for details.

d. Prior to application of Retro-Guard, a bonding agent, approved by the fireproofing manufacturer, shall be applied to all concrete substrates to receive Retro-Guard.

e. In advance of the application of the fireproofing, a bond test shall be conducted on all painted/primed steel surfaces or steel that has been covered with a lock down agent to determine if the paint or lock down agent will impair the ambient bond of the fireproofing.

f. Where cellular steel decking is present, both cellular and fluted decking requires the application of Spatterkote® SK-3 before application of Retro-Guard RG. The thickness of SK-3 is incorporated into the total fireproofing thickness.

g. Fireproofing to the underside of steel roof deck assemblies shall be done only after roofing applica-tion is complete and roof traffic has ceased.

Application

a. Application of Retro-Guard Fireproofing can be made in the following sequence:
   1. For thicknesses of approximately ½ in. (13 mm) or less, apply in one pass.
   2. For thicknesses of ⅝ in. (16 mm) or greater, apply second passes after the first coat has set.
      The use of the Monokote Accelerator Injection System is required to obtain optimal job site appli-cation performance. The use of the Monokote Accelerator Injection System will provide quick set material (usually seven to ten minutes after appli-cation), greater in-place yield, and the ability to spray an area in essentially one continuous opera-tion. Second coat can be applied as soon as first material applied has set.

b. Prior to application of Retro-Guard, a bonding agent, approved by the fireproofing manufacturer, shall be applied to all concrete substrates to receive Retro-Guard.

c. Spatterkote SK-3 shall be applied to all deck areas when flat plate cellular steel decking is present, and as specified in some roof deck designs. Consult current UL Directory for specific use. Spatterkote shall be applied in accordance with manufacturer's application instructions.

d. Retro-Guard Fireproofing material shall not be used if it contains partially set, frozen or caked material.

e. Retro-Guard shall have a minimum average dry in-place density of 15 lbs/ft^3 (240 kg/m^3).

f. Retro-Guard shall be mixed with water at the job site.

g. Monokote Accelerator when used shall be mixed and used according to the manufacturers recommendations.

h. Retro-Guard is applied directly to the steel, at various rates of application which will be job dependent, using standard plastering type equipment or continu-ous mixer/pump units. A spray gun, with a properly sized orifice and spray shield and air pressure at the nozzle of approximately 20 psi (38 KPa), will provide the correct hangability, density and appearance. NOTE: If freshly sprayed Retro-Guard does not adhere properly, it is probably due to a too wet mix, poor thickness control, or an improperly cleaned substrate.

Temperature & Ventilation

a. An air and substrate temperature of 40°F (4.5°C) minimum shall be maintained for 24 hours prior to application, during application and for a minimum or 24 hours after application of Retro-Guard.

b. Provisions shall be made for ventilation to properly dry the fireproofing after application. In enclosed areas lacking natural ventilation, air circulation and ventilation must be provided to achieve a minimum total fresh air exchange rate of 4 times per hour until the material is dry.

Field Tests

a. The architect will select an independent testing laboratory (for which the owner will pay) to sample and verify the thickness and density of the fireproofing in accordance with the the applicable building code.

b. The architect will select an independent testing laboratory (for which the owner will pay) to randomly sample and verify the bond strength of the fireproofing in accordance with the provisions of ASTM E736.

c. Results of the above tests will be made available to all parties at the completion of pre-designated areas which shall have been determined at a pre-job conference.

Safety

a. Retro-Guard is SLIPPERY WHEN WET.
   The General Contractor and Applicator shall be responsible for posting appropriate cautionary "SLIPPERY WHEN WET" signs.

b. A Material Safety Data Sheet for Retro-Guard is available on our web site at www.gcpat.com or call toll free at 866-333-3SBM.

We hope the information here will be helpful. It is based on data and knowledge considered to be true and accurate, and is offered for consideration, investigation and verification by the user, but we do not warrant the results to be obtained. Please read all statements, recommendations, and suggestions in conjunction with our conditions of sale, which apply to all goods supplied by us. No statement, recommendation, or suggestion is intended for any use that would infringe any patent, copyright, or other third party right.

Retro-Guard, Monokote and Spatterkote are trademarks, which may be registered in the United States and/or other countries, of GCP Applied Technologies Inc. This trademark list has been compiled using available published information as of the publication date and may not accurately reflect current trademark ownership or status.

© Copyright 2016 GCP Applied Technologies Inc. All rights reserved.

GCP Applied Technologies Inc., 62 Whittemore Avenue, Cambridge, MA 02140 USA.

In Canada, GCP Canada, Inc., 294 Clements Road, West, Ajax, Ontario, Canada L1S 3C6.

Printed in U.S.A. GCP0083a RG-121-0516

gcp applied technologies

CERTIFICATE OF COMPLIANCE

Certificate Number 20140117-R4339
Report Reference R4339-19981005
Issue Date 2014-JANUARY-17

Issued to: W R GRACE & CO - CONN
FIRE OPERATING UNIT
62 WHITTEMORE AVE
CAMBRIDGE MA 02140

This is to certify that representative samples of SPRAY-APPLIED FIRE-RESISTIVE MATERIALS and CEMENTITIOUS CEMENT AND PLASTER MIXTURES and FIRE-RESISTANCE RATINGS - ANSI/UL 263 and SPRAY-APPLIED FIRE RESISTIVE MATERIAL and CEMENTITIOUS MIXTURES

See Addendum Page

Have been investigated by UL in accordance with the Standard(s) indicated on this Certificate.

Standard(s) for Safety: See Addendum Page

Additional Information: See the UL Online Certifications Directory at www.ul.com/database for additional information

Only those products bearing the UL Classification Mark for the U.S. and Canada should be considered as being covered by UL's Classification and Follow-Up Service and meeting the appropriate U.S. and Canadian requirements.

The UL Classification Mark includes: the UL in a circle symbol: CLASSIFIED UL with the word "CLASSIFIED" (as shown); a control number (may be alphanumeric) assigned by UL; a statement to indicate the extent of UL's evaluation of the product; and the product category name (product identity) as indicated in the appropriate UL Directory. The UL Classification Mark for Canada includes: the UL Classification Mark for Canada: c CLASSIFIED UL with the word "CLASSIFIED" (as shown); a control number (may be alphanumeric) assigned by UL; a statement to indicate the extent of UL's evaluation of the product; and the product category name (product identity) in English, French, or English/French as indicated in the appropriate UL Directory.

Look for the UL Classification Mark on the product.

William R. Carney

William R. Carney, Director, North American Certification Programs

UL LLC

Any information and documentation involving UL Mark services are provided on behalf of UL LLC (UL) or any authorized licensee of UL. For questions, please contact a local UL Customer Service Representative at www.ul.com/contactus

CERTIFICATE OF COMPLIANCE

Certificate Number 20140117-R4339
Report Reference R4339-19981005
Issue Date 2014-JANUARY-17

This is to certify that representative samples of the product as specified on this certificate were tested according to the current UL requirements.

UL 263 - Fire Tests of Building Construction and Materials; UL 723 - Test for Surface Burning Characteristics of Building Materials; ULC-S101M - Standard Methods of Fire Endurance Tests of Building Construction and Materials; ULC-S102M - Standard Method of Test for Surface Burning Characteristics of Building Materials and Assemblies

A mixture of ingredients which when mixed with water form a cementitious mixture. Type Designations - Z-106/G. Trade Name - Zonolite 106/G.

William R. Carney

William R. Carney, Director, North American Certification Programs

UL LLC

Any information and documentation involving UL Mark services are provided on behalf of UL LLC (UL) or any authorized licensee of UL. For questions, please contact a local UL Customer Service Representative at www.ul.com/contactus

UL Evaluation Report

UL ER4339-02

Issued: August 15, 2016

Visit UL's On-Line Certifications Directory: www.UL.com/erdirectory for current status of Report.

UL Category Code: ULFE

CSI MasterFormat®

DIVISION: 07 00 00 – THERMAL AND MOISTURE PROTECTION
Sub-level 2: 07 80 00 – Fire and Smoke Protection
Sub-level 3: 07 81 00 – Applied Fireproofing
Sub-level 4: 07 81 16 – Cementitious Fireproofing

COMPANY:

GCP Applied Technologies
Fire Operating Unit
62 Whittemore Ave.
Cambridge, MA 02140
gcpappliedtech.com

1. SUBJECT:

Product Trade Name	UL Product Designation
MONOKOTE® MK-6®/GF	Type MK-6 GF
MONOKOTE® MK-6®/HY®	Type MK-6/HY
MONOKOTE® MK-6®/HY® EXTENDED SET (MK-6/HY ES)	Type MK-6/HY Extended Set
MONOKOTE® MK-6s	Type MK-6s
MONOKOTE® MK-10/HB	Type MK-10 HB
MONOKOTE® MK-10/HB EXTENDED SET (MK-10/HB ES)	Type MK-10 HB Extended Set
MONOKOTE® MK-1000/HB	Type MK-1000/HB
MONOKOTE® MK-1000/HB EXTENDED SET (MK-1000/HB ES)	Type MK-1000/HB Extended Set
RETRO-GUARD® RG	Type RG
MONOKOTE® Z-106/HY®	Type Z-106/HY
MONOKOTE® Z-106/G	Type Z-106/G

(Continued on next page)

Product Trade Name	UL Product Designation
MONOKOTE® Z-146	Type Z-146
MONOKOTE® Z-146T	Type Z-146T
MONOKOTE® Z-156	Type Z156
MONOKOTE® Z-156T	Type Z-156T
Spatterkote SK-3	Type SK-3
Monokote Accelerator	-
Firebond Concentrate	-
Monokote Patching Compound	Monokote Patching Compound

2. SCOPE OF EVALUATION

- 2015, 2012, 2009, 2006 *International Building Code*® (IBC)
- 2015, 2012, 2009, 2006 *International Mechanical Code*® (IMC)
- ICC-ES Acceptance Criteria for Sprayed Fire-Resistant Materials (SFRMs), Intumescent Fire-Resistant Coatings and Mastic Fire-Resistant Coatings Used to Protect Structural Steel Members (AC23), dated December 2012
- ICC-ES Acceptance Criteria for Quality Documentation (AC10), dated June 2014

The products were evaluated for the following properties:

- Fire Resistance (ANSI/UL 263, ASTM E119)
- Surface Burning Characteristics (ANSI/UL 723, ASTM E84)
- Cohesive / adhesive bond (ASTM E736)
- Deflection (ASTM E759)
- Impact Resistance (ASTM E760)
- Compressive Strength (ASTM E761)
- Air-stream Resistance (ASTM E859)
- Mold Growth and Humidity Resistance (ASTM G21)
- Environmental Exposures (ANSI/UL 263, ASTM E119)

3. REFERENCED DOCUMENTS

- ANSI/UL 263, 14th Ed. (ASTM E119), Fire Tests of Building Construction and Materials
- ANSI/UL 723, 10th Ed. (ASTM E84), Test for Surface Burning Characteristics of Building Materials
- ASTM E736-00 (2011), Standard Test Method for Cohesion/Adhesion of Sprayed Fire-Resistive Materials Applied to Structural Members
- ASTM E759-92 (2011), Standard Test Method for Effect of Deflection on Sprayed Fire-Resistive Material Applied to Structural Members
- ASTM E760-92 (2011), Standard Test Method for Effect of Impact on Bonding of Sprayed Fire-Resistive Material Applied to Structural Members
- ASTM E761-92 (2011), Standard Test Method for Compressive Strength of Sprayed Fire-Resistive Material Applied to Structural Members
- ASTM E859-93 (2011), Standard Test Method for Air Erosion of Sprayed Fire-Resistive Materials (SFRMs) Applied to Structural Members
- ASTM G21-09, Standard Practice for Determining Resistance of Synthetic Polymeric Materials to Fungi

4. USES

Monokote® MK-6/GF, MK-6/HY, MK-6/HY Extended Set (MK-6/HY ES, MK-6s, MK-10/HB, MK-10/HB Extended Set (MK-10/HB ES), MK-1000/HB, MK-1000/HB Extended Set (MK-1000/HB ES), Z-106/HY, Z-106/G, Z-146, Z-146T, Z-156, Z-156T, and Retro-Guard® RG are spray-applied cementitious fire-resistive materials intended for fire-resistance-rated applications on structural steel framing members in various concrete or steel roof-ceiling and floor-ceiling systems.

The SFRMs covered in this report are also approved for use in plenums, in accordance with 2015, 2012, 2009, and 2006 IMC Section 602.2.1.

Spatterkote SK-3, Monokote Accelerator, and Firebond Concentrate are additional materials that may be used in conjunction with the Monokote® products, to aid in the application process.

5. PRODUCT DESCRIPTION

5.1 General:

Monokote® MK-6/GF, MK-6/HY, MK-6/HY Extended Set (MK-6/HY ES), MK-6s, MK-10/HB, MK-10/HB Extended Set (MK-10/HB ES), MK-1000/HB, and MK-1000/HB Extended Set (MK-1000/HB ES) are standard-density spray-applied fire resistive materials (SFRMs) intended for use in new construction. Retro-Guard® RG is a standard density spray-applied fire resistive material used in re-spray or replacement applications.

Monokote® Z-106/HY and Z-106/G are medium density spray-applied fire resistive materials intended for use in new construction applications.

Monokote® Z-146, Z-146T, Z-156, and Z-156T are high density spray-applied fire resistive materials that are acceptable for use in exterior locations. The designations with T have an integral corrosion inhibitor for use in harsh environmental conditions.

Spatterkote SK-3 is a cementitious spray-applied fire resistive material that is applied prior to specific SFRM products, on certain galvanized steel floor and roof units, as shown in the appropriate UL Fire-Resistive Designs listed on the CHPX.R4339 Classification Card.

Monokote Accelerator is an optional set accelerator that can be mixed with the Monokote® MK-6/GF, MK-6/HY, MK-6/HY ES, MK-6s, MK-10/HB, MK-10/HB ES, MK-1000/HB, MK-1000/HB ES, Retro-Guard® RG, Z-106/HY, and Z-106/G SFRM products.

Firebond Concentrate is a material that may be applied prior to the Monokote® MK-6/HY, MK-6s, MK-10 HB, MK-10/HB ES, Z-106/HY, and Retro-Guard® RG products, as a bonding agent on concrete surfaces and primed structural members or as an encapsulant over the finished surface of the Monokote® MK-6/GF, MK-6/HY, MK-6/HY Extended Set (MK-6/HY ES), MK-6s, MK-10/HB, MK-10/HB Extended Set (MK-10/HB ES), MK-1000/HB, MK-1000/HB Extended Set (MK-1000/HB ES), Z-106/HY, Z-106/G, Z-146, Z-146T, Z-156, Z-156T, and Retro-Guard® RG SFRM.

The SFRMs covered in this report have a flame spread index of 25 or less and a smoke developed index of 50 or less when tested in accordance with ANSI/UL 723 (ASTM E84).

The following table summarizes the minimum average and minimum individual required densities for each product covered in this report:

Product Trade Name	Minimum Average Density (pcf)	Minimum Individual Density (pcf)
MONOKOTE® MK-6/GF	15	14
MONOKOTE® MK-6/HY	15	14
MONOKOTE® MK-6/HY EXTENDED SET (MK-6/HY ES)	15	14
MONOKOTE® MK-6s	15	14
MONOKOTE® MK-10/HB	15	14
MONOKOTE® MK-10/HB EXTENDED SET (MK-10/HB ES)	15	14
MONOKOTE® MK-1000/HB	18	17
MONOKOTE® MK-1000/HB EXTENDED SET (MK-1000/HB ES)	18	17
RETRO-GUARD® RG	15	14
MONOKOTE® Z-106/HY	22	19
MONOKOTE® Z-106/G	22	19
MONOKOTE® Z-146	40	36
MONOKOTE® Z-146T	40	36
MONOKOTE® Z-156	50	45
MONOKOTE® Z-156T	50	45

6. INSTALLATION

6.1 General:

The SFRMS covered in this report must be installed in accordance with this report and the manufacturer's published installation instructions, which must be available during installation at the jobsite.

The SFRMs are mill-mixed and machine-applied, using one or more coats to achieve the required thickness. To ensure an accurate spray pattern, air pressure and pumping rates shall be adjusted accordingly. The products may be hand-patched using the guidelines outlined in the UL CHPX.R4339 Classification Card. The thickness and densities of each product shall comply with the requirements of the various assemblies and applications as specified in the corresponding designs listed on the CHPX.R4339 Classification Card. The materials shall be applied quickly after mixing, without re-tempering. The equipment and mixer shall be kept clean prior to mixing the material.

The Monokote® MK-6/GF, MK-6/HY, MK-6/HY ES, MK-6s, MK-10/HB, MK-10/HB ES, MK-1000/HB, MK-1000/HB ES, Retro-Guard® RG, Z-106/HY, and Z-106/G SFRM products covered in this report may be injected with Monokote Accelerator in the field, to aid in product yield and the setting process.

6.2 Preparation of Substrate for SFRM Application

Prior to application, the substrate to receive the SFRMs shall be free of any substances or conditions that interfere with adhesion of the material, in accordance with 2015, 2012, 2009 IBC Section 704.13.3. Primers, paints, and encapsulants are allowed, provided they comply with 2015, 2012, 2009 IBC Sections 704.13.3.1 and 704.13.3.2.

Spatterkote SK-3 shall be “spatter” applied to the substrate prior to the SFRMS installed in accordance with the corresponding Fire-Resistive Designs as shown in the CHPX.R4339 Classification Card. Thickness of the Spatterkote SK-3 is included in the total final thickness of the SFRM.

Firebond Concentrate is an encapsulant material that may be used with Monokote® MK-6/GF, MK-6/HY, MK-6/HY Extended Set (MK-6/HY ES), MK-6s, MK-10/HB, MK-10/HB Extended Set (MK-10/HB ES), MK-1000/HB, MK-1000/HB Extended Set (MK-1000/HB ES), Z-106/HY, Z-106/G, Z-146, Z-146T, Z-156, Z-156T, and Retro-Guard® RG applied at 500 ft^2/gal. Firebond Concentrate shall be applied to primed or painted surfaces as a bonding agent for SFRMs to obtain the minimum bond strengths in the field as required by 2015, 2012, 2009 IBC Section 704.13.3.2(4).

If minimum bond strengths are not met at the jobsite, and for wide flange and certain HSS structural steel shape dimensions that do not meet the conditions specified in 2015, 2012, 2009 IBC Section 704.13.3.2 for allowing primers, paints, and encapsulants at the jobsite, a mechanical break is required. Refer to the various UL Fire-Resistive Designs in the CHPX.R4339 Classification Card, as well as the Guide Information Card for UL Category Code BXUV for specific requirements on the required mechanical break to facilitate the spray application of SFRMs.

6.3 Fire Resistive Assemblies

The SFRMs covered in this report shall be installed as specified in one or more of the UL Fire-Resistive Designs as listed in the CHPX.R4339 Classification Card, for each of the corresponding SFRMs. Refer to the table in Section 1 of this report for the UL Product Designation for each Trade Name.

6.4 Thickness Tolerances

The minus tolerance of the SFRM thickness must be no greater than 1/4 inch, or 25% of a design thickness of less than 1 inch. When applicable, additional material must be applied to meet this tolerance.

When an individually measured SFRM thickness exceeds the design thickness by 1/4 inch or more, the thickness shall be recorded as the design thickness plus 1/4 inch.

6.5 Special Inspections for SFRMs

Special inspections are required for the SFRMs covered in this report, in accordance with 2015 IBC Section 1705.14, 2012 IBC Section 1705.13, 2009 IBC Section 1704.12, or 2006 IBC Section 1704.10.

6.6 SFRMs Recognized for Exterior Use: Physical Property Requirements

Monokote® Z-146, Z-146T, Z-156, and Z-156T have been evaluated for exterior use in accordance with AC23 and may be applied on exposed structural shapes less than 8 ft (2438 mm) from a floor, landing, or occupied space.

Where the applied SFRMs are subject to impact damage, they shall be protected with corner guards or any other substantial jacket of metal or noncombustible material to at least 5 ft (1524 mm) from the finished floor, in accordance with 2015, 2012, 2009 IBC Section 704.9, or 2006 IBC Section 714.4.

6.7 Installation within Plenums

The SFRMs covered in this report have been found to be suitable for use in plenums based on:

- The listing and labeling requirements of 2015, 2012, 2009, and 2006 IMC Section 602.2.1 for flame spread and smoke developed, and

- The Air-stream Resistance and Mold Growth and Humidity Resistance requirements of ASTM E859 and ASTM G21, respectively.

The SFRMs are suitable for use in plenums with the following maximum air velocities:

SFRM	Maximum Allowed Air Velocity (fpm)
MK-6/GF, MK-6/HY, MK-6/HY ES, MK-10/HB, MK-10/HB ES, MK-1000/HB, MK-1000/HB ES, Retro-Guard RG, Z-106/HY	1,370 (based on max. tested speed of 2,740 fpm)
MK-6s, Z-106/G	1,320 (based on max. tested speed of 2,640 fpm)
Z-146, Z-146T, Z-156, Z-156T	4,500 (based on max. tested speed of 9,000 fpm)

7. CONDITIONS OF USE

7.1 General:

The SFRMs described in this report comply with, or are suitable alternatives to what is specified in, those codes listed in Section 2 of this report, subject to the following conditions:

7.2 The products must be manufactured, identified, and installed in accordance with this report, the manufacturer's published installation instructions, and the applicable code. If there is a conflict between the manufacturer's installation instructions and this report, the report governs.

7.3 All assemblies shall be built in accordance with the applicable published UL designs, or as otherwise described in this report.

7.4 The density, thickness, and bond strength of the Monokote® SFRMs in this report must be measured in accordance with 2015 IBC Section 1705.14, 2012 Section 1705.13, 2009 IBC Section 1704.12, or 2006 IBC Section 1704.10.

7.5 The Monokote® MK-10/HB and MK-10/HB Extended Set (MK-10/HB ES) SFRMs recognized in this report have been evaluated for use in high-rise buildings up to 420 feet (128 m) in height in accordance with 2015, 2012, 2009 IBC Section 403.2.4 and Table 403.2.4.

7.6 The Monokote® Retro-Guard® RG, MK-1000/HB, MK-1000/HB Extended Set (MK-1000/HB ES), Z-106/HY, Z-106/G, Z-146, Z-146T, Z-156, and Z-156T SFRMs recognized in this report have

been evaluated for use in high-rise buildings up to and greater than 420 feet (128 m) in height in accordance with IBC Section 403.2.4 and Table 403.2.4.

7.7 See UL's Online Certification Directory under UL File R4339 for Spray-applied Fire-Resistive Materials (CHPX) evaluated as a part of fire-resistance-rated assemblies in accordance with ANSI/UL 263.

7.8 The SFRMs covered in this Evaluation Report are manufactured by GCP Applied Technologies, located at the manufacturing location(s) named below, under the UL LLC Listing/Classification and Follow-Up Service Program, which includes inspections in accordance with the quality elements of ICC-ES Acceptance Criteria for Quality Documentation, AC 10.

Location	Plant ID (if applicable)
Irondale, AL	IR
Santa Ana, CA	SA
Ajax, Canada	A or AJ

8. SUPPORTING EVIDENCE

8.1 Manufacturer's product literature and installation instructions.

8.2 Data in accordance with ICC-ES Acceptance Criteria for Quality Documentation (AC10), dated June 2014.

8.3 Data in accordance with ICC-ES Acceptance Criteria for Sprayed Fire-Resistant Materials (SFRMs), Intumescent Fire-Resistant Coatings and Mastic Fire-Resistant Coatings Used to Protect Structural Steel Members (AC23), dated December 2012.

8.4 UL Classification reports in accordance with ANSI/UL 263 (ASTM E119). See UL Product Certification Category, Spray-applied Fire-Resistive Materials (CHPX).

8.5 UL Classification reports in accordance with ANSI/UL 723 (ASTM E84). See UL Product Certification Category, Cementitious Cement and Plaster Mixtures (BLPR).

9. IDENTIFICATION

The products described in this evaluation report are identified by a marking bearing the report holder's name [GCP Applied Technologies], the plant identification, the UL Listing/Classification Mark, and the evaluation report number UL ER4339-02. The validity of the evaluation report is contingent upon this identification appearing on the product or UL Listing/Classification Mark certificate.

10. USE OF UL EVALUATION REPORT

10.1 The approval of building products, materials or systems is under the responsibility of the applicable authorities having jurisdiction.

10.2 UL Evaluation Reports shall not be used in any manner that implies an endorsement of the product, material or system by UL.

10.3 The current status of this report, as well as a complete directory of UL Evaluation Reports may be found at UL.com via our On-Line Certifications Directory:

www.UL.com/erdirectory

© 2016 UL LLC

This UL Evaluation Report is not an endorsement or recommendation for use of the subject and/or product described herein. This report is not the UL Listing or UL Classification Report that covers the subject product. The subject product's UL Listing or UL Classification is covered under a separate UL Report. UL disclaims all representations and warranties whether express or implied, with respect to this report and the subject or product described herein. Contents of this report may be based on data that has been generated by laboratories other than UL that are accredited as complying with ISO/IEC Standard17025 by the International Accreditation Service (IAS) or by any other accreditation body that is a signatory to the International Laboratory Accreditation Cooperation (ILAC) Mutual Recognition Arrangement (MRA). The scope of the laboratory's accreditation shall include the specific type of testing covered in the test report. As the accuracy of any non-UL data is the responsibility of the accredited laboratory, UL does not accept responsibility for the accuracy of this data.

UL Product iQ®

BXUV.D925 - Fire-resistance Ratings - ANSI/UL 263

Design/System/Construction/Assembly Usage Disclaimer

- Authorities Having Jurisdiction should be consulted in all cases as to the particular requirements covering the installation and use of UL Certified products, equipment, system, devices, and materials.
- Authorities Having Jurisdiction should be consulted before construction.
- Fire resistance assemblies and products are developed by the design submitter and have been investigated by UL for compliance with applicable requirements. The published information cannot always address every construction nuance encountered in the field.
- When field issues arise, it is recommended the first contact for assistance be the technical service staff provided by the product manufacturer noted for the design. Users of fire resistance assemblies are advised to consult the general Guide Information for each product category and each group of assemblies. The Guide Information includes specifics concerning alternate materials and alternate methods of construction.
- Only products which bear UL's Mark are considered Certified.

Fire-resistance Ratings - ANSI/UL 263

BXUV - Fire Resistance Ratings - ANSI/UL 263 Certified for United States

BXUV7 - Fire Resistance Ratings - CAN/ULC-S101 Certified for Canada

See General Information for Fire-resistance Ratings - ANSI/UL 263 Certified for United States
Design Criteria and Allowable Variances

See General Information for Fire Resistance Ratings - CAN/ULC-S101 Certified for Canada
Design Criteria and Allowable Variances

Design No. D925

November 19, 2022

Restrained Assembly Ratings — 3/4, 1, 1-1/2, 2 or 3 Hr (See Items 1, 3A, 6, 10 and 11)
Unrestrained Assembly Rating — 0 Hr (See Items 3, 3A, 4, 4A, 10 and 11)
Unrestrained Beam Ratings — 1, 1-1/2, 2, 3 and 4 Hr (See Items 4, 4A, 10 and 11)
Restricted Load Condition — See Supports and Item 4C
This design was evaluated using a load design method other than the Limit States Design Method (e.g., Working Stress Design Method). For jurisdictions employing the Limit States Design Method, such as Canada, a load restriction factor shall be used — See Guide BXUV or BXUV7

*** Indicates such products shall bear the UL or cUL Certification Mark for jurisdictions employing the UL or cUL Certification (such as Canada), respectively.**

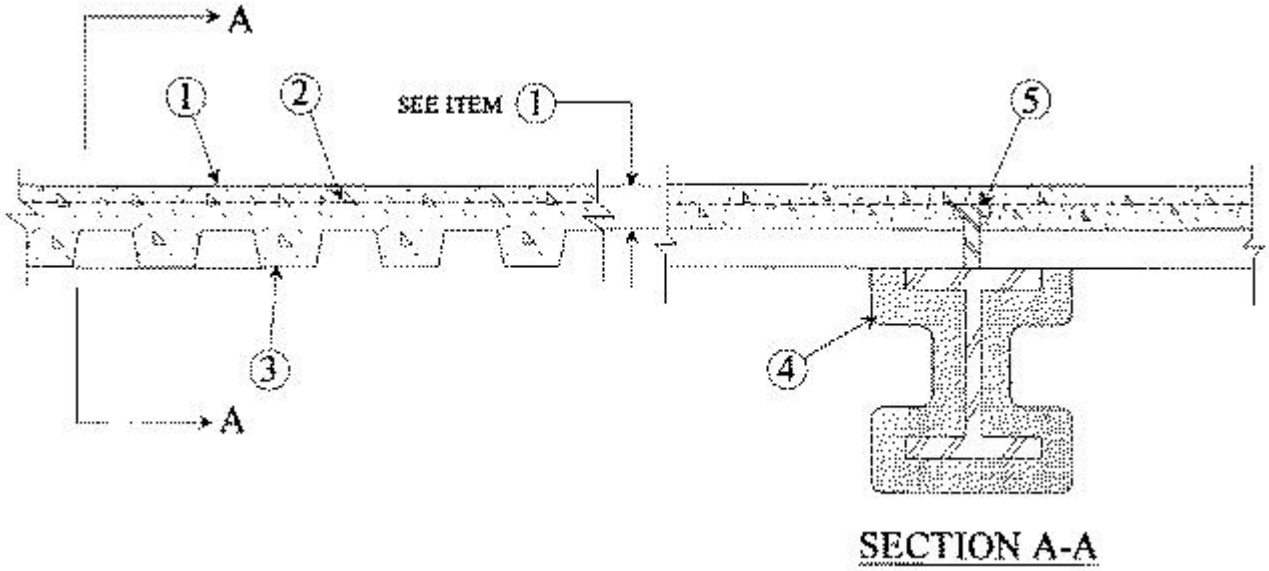

SECTION A-A

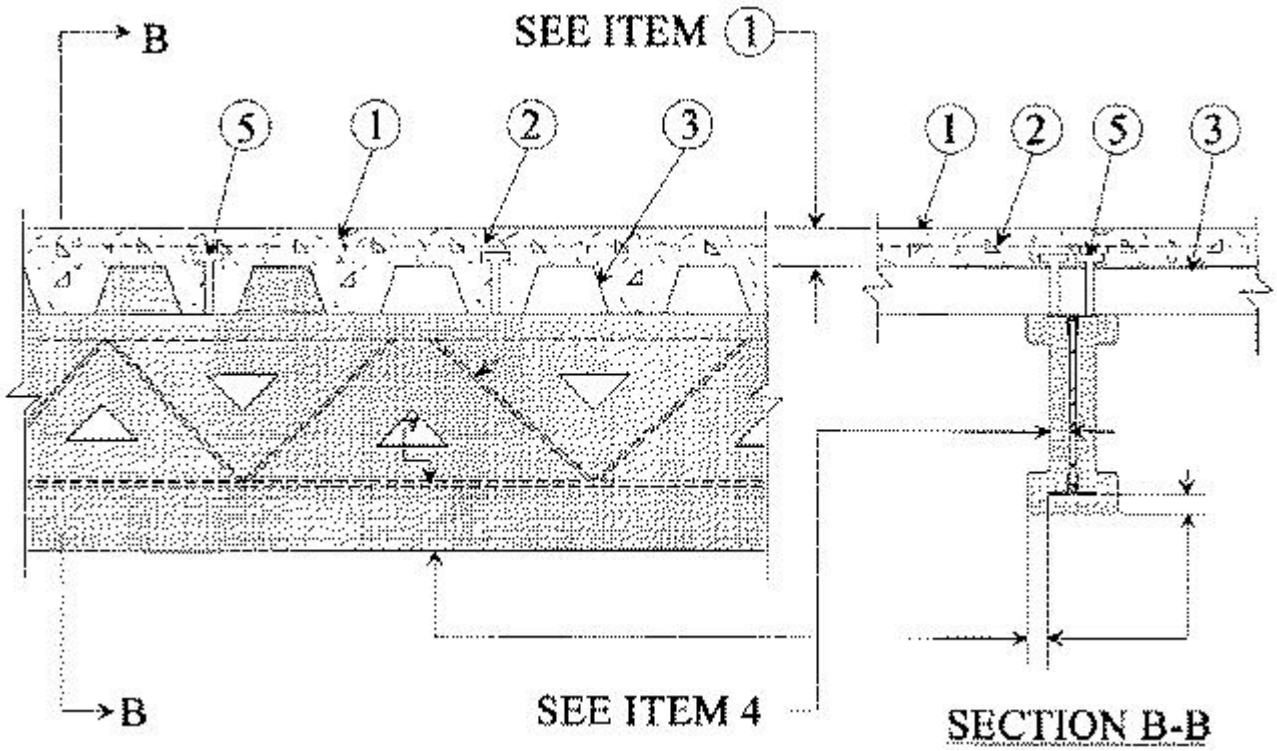

SECTION B-B

Supports — W8x28,W12x16 or alternate (per Section IV.6 in the front of the Fire Resistance Directory) steel beam or min 8K1 steel joists when joist substitution applied.

1. **Normal Weight or Lightweight Concrete —** Normal weight concrete carbonate or siliceous aggregate, 3500 psi compressive strength, vibrated. Lightweight concrete, expanded shale, or slate aggregate by rotary-kiln method, or expanded clay aggregate by rotary-kiln or sintered-grate method, or pumice aggregate, 3000 psi compressive strength, vibrated, 4 to 7 percent entrained air.

Restrained Assembly Rating Hr	Concrete (Type)	Concrete Unit Weight pcf	Concrete Thkns In.
1	Normal Weight	147-153	3-1/2
1-1/2	Normal Weight	147-153	4
2	Normal Weight	147-153	4-1/2
3	Normal Weight	147-153	5-1/4
3/4 or 1	Lightweight	107-113	2-1/2

1	Lightweight	107-120	2-5/8
1-1/2	Lightweight	107-113	3
2	Lightweight	107-113	3-1/4
2	Lightweight	107-116	3-1/4*
2	Lightweight	114-120	3-1/2
3	Lightweight	107-113	4-3/16
3	Lightweight	114-120	4-7/16

*For use with 2 or 3 in. steel floor and form units only.

2. **Welded Wire Fabric —** 6 x 6, 10 x 10 SWG.

2A. **Negative Reinforcement —** - (Not Shown) - Optional - For 3/4, 1, 1-1/2 and 2 Hr Restrained Assembly Rating Only. Used in lieu of Item 2 and with Items 2B or 2C. For floor spans with concrete cast continuous over the supporting beams. Deformed bars designed to resist the support moments of the concrete slab in accordance with the latest ACI Building Code Specifications.

2B. **Fiber Reinforcement* —** - (Not Shown) - For 3/4, 1, 1-1/2 and 2 Hr Restrained Assembly Rating Only. Required with Item 2A. Engineered synthetic fibers added to concrete mix to control shrinkage cracks in concrete. Fibers added to concrete mix at rate of 5 lbs of fiber for each cubic yard of concrete.
GCP APPLIED TECHNOLOGIES INC — Type Strux 90/40.

2C. **Fiber Reinforcement* —** (Not Shown) - For 3/4, 1, 1-1/2 and 2 Hr Restrained Assembly Rating Only. Required with Item 2A. Engineered synthetic fibers added to concrete mix to control shrinkage cracks in concrete. Fibers added to concrete mix at rate of 1 lbs of fiber for each cubic yard of concrete (Fibermesh 150) or 1.5 lbs of fiber for each cubic yard of concrete (Fibermesh 300).
PROPEX OPERATING CO L L C — Types Fibermesh 150 and Fibermesh 300.

3. **Steel Floor and Form Units* —** Composite or Non-Composite, 1-1/2, 1-5/8, 2 or 3 in. deep galv units or 4-1/2 in. deep non-composite galv units. Fluted units may be uncoated or phosphatized/painted. Min gauges are 22 MSG for fluted and 20/20 MSG for cellular units. The following combinations of units may be used:
(1) All 18, 24, 26 28 or 36 in. wide cellular.

(2) All fluted.

(3) One or two 3 in. deep, 12 in. wide, 18/18 MSG min cellular units, alternating with 3 in. deep fluted or other cellular.

(4) Any blend of fluted and 18, 24, 26, 28, or 36 in. wide cellular.

(5) 3 in. deep, 30 in. wide cellular with 8-1/8 in. wide valley alongside joints may be used when 3/8 in. diam reinforcing bars are placed 1-1/2 in. to each side of side joints and 1 in. above bottom of units.

(6) Corrugated, 1-5/16 in. deep, 30 in. wide, 24 MSG min galv units with shear wires factory welded to deck corrugations. Welded to supports 12 in. OC. through welding washers. For shear wire spacing of 8 in. or less the steel deck stress shall not exceed 20 KSI. For shear wire spacing greater than 8 in. OC. but less than or equal to 12 in. OC. steel deck stress shall not exceed 12 KSI.

ASC STEEL DECK, DIV OF ASC PROFILES L L C — 32 in. wide Types NH-32, NHN-32, NHF-32; 36 in. wide Types BH-36, BHN-36, BHN-35-1/4, BHF-36, BHF-36A, 2WH-36, 2WHS-36, 2WHF-36, 2WHF-36A, 3WxH-36, 3WxHF-36, 3WxHF-36A, 3WH-36, 3WHF-36, 3W-36, 3WF-36, DG3W-36, DG3WF-36. All units may be galvanized or Prime Shield. Non-cellular decks may be vented designated with a "V" suffix to the product name. Cellular deck top and bottom sections may be riveted together (designated with "Fr") vs. arc spot welded, "F".

CANAM GROUP INC — 36 in. wide Type P-3623, P-3606, P-3615 and 24 in wide Type P-2432 composite; 24 or 36 in. wide Type 3 in. LOK-Floor; 36 in. wide Types 1.5B, 1.5BI, 1.5BL and 1.5BL.

CANAM STEEL CORP — 24 in. wide, Types 1-1/2, 2 or 3 in. LOK-Floor and LOK-Floor Cell; 36 in. wide, Types 2 or 3 in. LOK-Floor and LOK-Floor Cells; 24 in. wide, Types N-LOK and N-LOK Cell; 24, 30 or 36 in. wide, Type 1-1/2 in. B-LOK and B-LOK Cell.

NEW MILLENNIUM BUILDING SYSTEMS L L C — 24 in. wide Type Versa-Dek.

DECK WEST INC — 36 in. wide Type B-DW, 2-DW or 3-DW. Side joints of 2-DW and 3-DW may be fastened together with min 1 in. long No. 12 x 14 self-drilling, self-tapping steel screw 36 in. OC.

DESIGN ASSISTANCE CONSTRUCTION SYSTEMS INC — 36 in. wide Type DACS1.5CD, or 24 in. wide Type DACS2.0CD, or DACS3.0CD.

EPIC METALS CORP — 24 in. wide Types EC150, ECP150, EC300, ECP300, EC366, ECP366, EC150, EC300 inverted, Epicore A; 30 in. wide Types ECB150, ECBR150; 36 in. wide Types EC266.

H H ROBERTSON — QL Types, 24 in. wide 3 or 3 inverted, UKX, UKX-3, 2 in. 99, AKX, 21 or 21 inverted, 121, NKX, TKX; 24 or 30 in. wide GKX, GKX-A; 36 in. wide 99, AKX, WKX; 24 26, 94, 36 in. wide NKX; 1.5NKC, NKC, AKX, 2 or 3 in. TKC; 12 in. wide noncomposite Sec. 12; 17 in. wide 21; 26 or 28 in. wide UKX, 87.5 cm wide. Side joints of QL, 99, 121, WKX, TKX, TKC, and Metric units — QL-77-900; QLC-78-900; may be welded together 60 in. OC. Side joints of 99, AKX, WKX, GKX, GKX-A, TKX and Metric units — QL-77-900 and QLC-78-900 may be fastened together with min 1 in. long No. 12x14 self-drilling, self-tapping steel screws 36 in. OC.

HAMBRO STRUCTURAL SYSTEMS, DIV OF CANAM STEEL CORP — 36 in. wide, 1-1/2 in. Type P3615HB. The max superimposed loadings for Type P3615HB units shall not exceed 250 PSF. For single spans, the use of the units shall be limited to 5 ft. 6 in., 6 ft 0 in. and 6 ft 6 in. max spans for the 22, 20 and 18 gauge units, respectively. For multiple spans, 18 gauge units may be used on a max 7 ft 6 in. span with a max total superimposed loading of 240 PSF.

INTSEL STEEL EAST LLC — 36 in. wide Types 1.5" COMPOSITE/FLOOR, 2" COMPOSITE/FLOOR, 3" COMPOSITE/FLOOR.

KAM INDUSTRIES LTD, DBA CORDECK — 24 in. wide Types 2 or 3 in. WDR.

MARLYN STEEL DECKS INC — Type 1.5 CF, 2.0 CF or 3.0 CF.

NEW MILLENNIUM BUILDING SYSTEMS L L C — 24 or 36 in. wide Types 2.0CD, 3.0CD, 2.0CFD, 3.0CFD, 3.0CFDES; 24, 30 or 36 in. wide Types 1.5CD, 1.5CDI, 1.5CDR, 1.5CFD. Fluted units may be uncoated, phos/painted or galvanized.

STEEL MASTERS INTERNATIONAL DEPENDABLE STEEL — 36 in. wide Types 2WH-36, 3WH-36. Units may be phos/painted or galvanized.

VALLEY JOIST+DECK — 24 or 36 in. wide Types WVC 1-1/2 or WVC 2.

VERCO DECKING INC - A NUCOR CO — FORMLOK™ deck types PLB, B, BR, PLN3, N3, PLN, N, PLW2, W2, PLW3, W3. Units may be galvanized, phos./ptd, or mill finish. Units may be cellular or acoustical cellular, with the suffix "CD" or "CD-AC" added to the product name, respectively. All non-cellular deck may be vented or non-vented.12 in. wide PLW2, W2, PLW3 or W3 units may be blended with 24 or 36 in. wide PLW2, W2, PLW3 or W3 units, respectively; or Types N3, PLN3, N3-CD, PLN3-CD.

VULCRAFT, DIV OF NUCOR CORP — 24, 30 or 36 in. wide, Type 1.5 VL, 1.5 VLI, 1.5PLVLI, 1.5 VLP, 1.5PLVLP; 24 or 36 in. wide. Types 2VLI, 2.0PLVLI, 2VLP, 2.0PLVLP, 3VLI, 3.0PLVLI, 3 VLP, 3.0PLVLP. 36 in. wide Types 1.5 SB, 1.5 SBR; 24 or 36 in wide Types 2.0 SB, 3.0 SB, 36 in. wide Type High Strength 1.5 SBI, 36 in. wide Type High Strength 1.5 SBN.

Components for field-assembled cellular metal raceway units:

Raceway Bottom — 24 or 36 in. wide Types 212 VS, 312 VS .

Raceway Cover Plate — Types CP-12, CP-16.

Raceway Divider — Type DC-20, DC-25.

Raceway Isolation Trough — Types T-20, T-25, T-30.

Spacing of welds attaching units to supports shall be 12 in. OC for 12, 24 and 36 in. wide units, four welds per sheet for 30 in. wide units, 6 in. OC for 18 in. wide and Sec. 12 units. Unless noted otherwise, adjacent units button-punched or welded together 36 in. OC alongside joints. Adjacent 18 in. wide units welded together 30 in. OC alongside joints. For 3 Hr Rating, units with overlapping type side joints welded together 24 in. OC max.

The Unrestrained Assembly Rating is equal to the Unrestrained Beam Rating for a max of 3 Hr and is limited to the following floor units and spans:

(a) 1-1/2, 2 and 3 in. deep, 24 in. wide, 22 MSG or thicker fluted with clear spans not more than 7 ft, 8 in.

(b) 1-1/2, 2 and 3 in. deep, 24 in. wide, 20 MSG or thicker fluted with clear spans not more than 8 ft, 8 in.

(c) 1-1/2 and 2 in. deep, 24 in. wide, 16 MSG or thicker fluted and 18/18 MSG or thicker cellular with clear spans not more than 9 ft, 11 in.

(d) 3 in. deep, 36 in. wide, 18 MSG or thicker fluted and 24 in. wide, 20/18 MSG or thicker cellular with clear spans not more than 13 ft, 2 in.

For assemblies utilizing 3-1/4 in. lightweight concrete topping with a max Restrained Assembly Rating of 2 Hr, the Unrestrained Assembly Rating is equal to the Unrestrained Beam Rating and is limited to the following floor units and spans:

(a) 1-1/2, 2, and 3 in. deep, 24 or 36 in. wide, 22 MSG fluted and 20/20 MSG cellular with clear spans not more than 9 ft, 6 in.

(b) 2 and 3 in. deep, 24 or 36 in. wide 20 MSG fluted and 20/20 MSG cellular with clear spans not more than 10 ft, 0 in.

(c) 3 in. deep, 24 in. wide, 20 MSG fluted and 20/20 MSG cellular with clear spans not more than 13 ft, 2 in.

3A. **Steel Floor and Form Units* —** (not Shown) - As an alternate to Item 3. Nom 8 or 9 in. deep composite, galv steel units. Min thickness 0.0375 inch (20 MSG). Side joints of adjacent units fully overlapping, fastened together by using 1-1/4 in. long self-drilling, self-tapping steel screws driven through Shear-Bond Clips (not shown) at 13-3/4 in. OC. Steel end closures flashings (not shown) made of min 0.056 inch thick (16 MSG) galv steel, fixed to the steel work before decking is placed.

In addition to the Steel Floor and Form Units, the following components are required:

(a) Welded Wire Fabric — 6 X 6 - Min wire thickness W2.9 X W2.9 slab reinforcement. As an alternate, max # 4 bars spaced 12-in. OC in both directions shall be used. When re-bars are used, the concrete slab thickness shall be increased a minimum 5/16 in.

(b) Rib Reinforcement —Min. #4 rebar. Min concrete cover below the steel reinforcement shall be 1-9/16 in. Reinforcement support chairs spaced at max 41-1/2 inches OC.

The flute areas above the beam/joist are to be : (1) filled with concrete, (2) filled with Spray-Applied Fire Resistive Material or (3) the beam/joist coated with Spray-Applied Fire Resistive Material installed as described in the design to thickness required when all cellular Steel Floor and Form Units are used.

See Design No. D989 for a typical illustration of the components. Consult the deck manufacturer for comprehensive load tables and design parameters referencing UL Design D989.

BAILEY METAL PRODUCTS LTD — Type COMSLAB™ 210 and COMSLAB™ 225, Steel End Closure Flashing

4. **Spray-Applied Fire Resistive Materials —** Applied by mixing with water and spraying in one or more coats to a final thickness as shown in the tables below, to steel beam surfaces which must be clean and free of dirt, loose scale and oil. Min avg and min ind density of 15/14 pcf, respectively for Types MK-6/HY, MK-6/HY Extended Set, MK-6/HB, MK-6s, MK-6 GF, MK-6 GF Extended Set, MK-10 HB, MK-10 HB Extended Set, MK-1000/HB, MK-1000/HB Extended Set, RG. Min avg and min ind density of 22/19, respectively for Types Z-106, Z-106/G. For method of density determination, refer to Design Information Section.

Restrained Assembly Rating Hr	Unrestrained Assembly Rating Hr	Unrestrained Beam Rating Hr	W8x28 Beam (see Note #1)	W8x28 Beam Supporting (see Note #1) All Fluted Floor Units w/Light weight Concrete	Fluted Floor Units and Normal Weight Concrete Only	W12x16 Beam (see Note #1)	W12x16 Beam Supporting All Fluted Floor Unit (see Note #1)
1	1	1	1/2,	5/16,	5/16	11/16,	5/8,
			11/16#	11/16#		1-1/8#	1#
1-1/2	1	1	1/2,	5/16,	5/16	11/16,	5/8,
			11/16#	11/16#		1-1/8#	1#
1-1/2	1-1/2	1-1/2	13/16,	11/16,	5/8	1-1/8,	1,
			1-1/16#	1#		1-7/16#	1-3/8#
2	1	1	1/2,	5/16,	5/16	11/16,	5/8,
			11/16#	11/16#		1-1/8#	1#
2	2	2	1-1/16,	1,	7/8	1-7/16,	1-3/8,
			1-5/16#	1-3/16#		1-13/16#	1-9/16#
3	1-1/2	1-1/2	13/16	11/16	5/8	1-1/8	1
3	3	3	1-9/16	1-5/16	1-7/16	2-1/8	1-3/4
3	3	4	2	1-5/8	2	2-11/16	2-3/16

Note #1: Joists from the N series designs may be substituted for the listed beam. When joists are substituted, the restrained rating of the joist must be equal to or greater that the restrained rating of the assembly. Additional joist substitution requirements are contained in the front of the Fire Resistance Directory.

#This thickness applies when optional Item 10 is used over 3-1/4 in. light weight concrete topping.

The thicknesses of Spray-Applied Fire Resistive Materials shown in the table below are applicable when the thickness applied to the beams' lower flange edges is reduced to one-half that shown in the table.

Restrained Assembly Rating Hr	Unrestrained Assembly Rating Hr	Unrestrained Beam Rating Hr	W8x28 Beam	W8x28 Beam Supporting All Fluted Floor Units w/Lightweight Concrete	W12x16 Beam	W12x16 Beam Supporting All Fluted Floor Unit
1	1	1	9/16	7/16+	3/4	5/8
1-1/2	1	1	9/16	7/16+	3/4	5/8
1-1/2	1-1/2	1-1/2	7/8	3/4	1-3/16	1

2	1	1	9/16	7/16+	3/4	5/8
2	2	2	1-3/16	1	1-5/8	1-3/8
3	1-1/2	1-1/2	7/8	3/4	1-3/16	1
3	3	3	1-3/4	1-9/16	2-3/8	2-1/8
3	3	4	2-5/16	2-1/16	3-1/8	2-3/4

+Thickness applied to beams' lower flange edges shall be a minimum of 1/4 in.

ARABIAN VERMICULITE INDUSTRIES — Types MK-6/HY, MK-6/HY Extended Set, MK-6/HB, MK-6s, MK-6 GF, MK-6 GF Extended Set, MK-10 HB, MK-10 HB Extended Set, MK-1000/HB, MK-1000/HB Extended Set, Z-106, Z-106/G.

GCP KOREA INC — Types MK-6/HY, MK-6/HY Extended Set, MK-6/HB, MK-6s, MK-6 GF, MK-6 GF Extended Set, MK-10 HB, MK-10 HB Extended Set, MK-1000/HB, MK-1000/HB Extended Set, Z-106/G, Z-106.

GCP APPLIED TECHNOLOGIES INC — Types MK-6/HY, MK-6/HY Extended Set, MK-6/HB, MK-6s, MK-6 GF, MK-6 GF Extended Set, MK-10 HB, MK-10 HB Extended Set, MK-1000/HB, MK-1000/HB Extended Set, RG, Z-106/G, Z-106.

4A. **Alternate Spray-Applied Fire Resistive Materials —** Applied by mixing with water and spraying in one or more coats to a final thickness as shown in the tables below to steel beam surfaces which must be clean and free of dirt, loose scale and oil. The thicknesses shown in the table below are applicable to beams supporting all fluted floor or form units. Min avg and min ind density of 22/19 pcf respectively for Z-106/HY. For density determination refer to Design Information Section.

			W8x28 Beam Supporting (see Note #1)	
Restrained Assembly Rating Hr	**Unrestrained Assembly Rating Hr**	**Unrestrained Beam Rating Hr**	**All Fluted Floor Units w/Lightweight Concrete**	**Fluted Floor Units and Normal Weight Concrete Only**
1	1	1	5/16, 11/16##	5/16
1-1/2	1-1/2	1-1/2	11/16, 1##	5/8
2	1	1	5/16, 11/16##	5/16
2	2	2	1, 1-3/16##	7/8
3	1-1/2	1-1/2	11/16	5/8
3	3	3	1-5/16	1-7/16
3	3	4	1-5/8	2

Note #1: Joists from the N series designs may be substituted for the listed beam. When joists are substituted, the restrained rating of the joist must be equal to or greater that the restrained rating of the assembly. Additional joist substitution requirements are contained in the front of the Fire Resistance Directory.

##This thickness applies when optional Item 10 is used over 3-1/4 in. light weight concrete topping.

ARABIAN VERMICULITE INDUSTRIES — Types Z-106/HY

GCP APPLIED TECHNOLOGIES INC — Type Z-106/HY.

GCP KOREA INC — Type Z-106/HY.

4B. **Alternate Spray-Applied Fire Resistive Materials —** Applied by mixing with water and spraying in one or more coats to a final thickness as shown in the tables below to steel beam surfaces which must be clean and free of dirt, loose scale and oil. The thicknesses shown in the table below are applicable to beams supporting all fluted floor or form units. Min avg and min ind density of 40/36 pcf respectively for Types AV-650, Z-146, Z-146PC and Z-146T cementitious mixture. Min avg and min ind density of 50/45 pcf respectively for Types AV800, Z-156, Z-156T and Z-156PC. For density determination refer to Design Information Section.

			W8x28 Beam Supporting (see Note #1)	
Restrained Assembly Rating Hr	**Unrestrained Assembly Rating Hr**	**Unrestrained Beam Rating Hr**	**All Fluted Floor Units w/Lightweight Concrete**	**Fluted Floor Units and Normal Weight Concrete Only**
1	1	1	5/16, 11/16##	5/16
1-1/2	1-1/2	1-1/2	11/16, 1##	5/8
2	1	1	5/16, 11/16##	5/16
2	2	2	1, 1-3/16##	7/8
3	1-1/2	1-1/2	11/16	5/8
3	3	3	1-5/16	1-7/16
3	3	4	1-5/8	2

Note #1: Joists from the N series designs may be substituted for the listed beam. When joists are substituted, the restrained rating of the joist must be equal to or greater that the restrained rating of the assembly. Additional joist substitution requirements are contained in the front of the Fire Resistance Directory.

##This thickness applies when optional Item 10 is used over 3-1/4 in. light weight concrete topping.

ARABIAN VERMICULITE INDUSTRIES — Types AV-650, AV-800 and Z-146 investigated for exterior use.

GCP APPLIED TECHNOLOGIES INC — Type Z-146, Z-146T, Z146PC, Z-156, Z-156T and Z-156PC investigated for exterior use.

GCP KOREA INC — Type Z-146 investigated for exterior use.

4C. **Sprayed Fiber* —** (Optional, Not Shown) Sprayed Fiber, Classified for Surface Burning Characteristics (BNST), having a maximum applied density of 3.5 pcf applied over both Steel Floor and Form Units (Item 3 and 3A) and over Spray-Applied Fire Resistive Material (Item 4 through 4B) on Supports. Sprayed Fiber may be applied to the underside of Steel Floor and Form Units (Item 3 and 3A) at an unlimited thickness. Sprayed Fiber may be applied over Spray-Applied Fire Resistive Material (Item 4 through 4B) on Supports according to the following table:

Allowable Sprayed Fiber Thickness over SFRM applied to Beams

Installed SFRM Thickness (in.) on Beam	**SFRM Density (lb/ft^3)**			
	15	**22**	**40**	**50**
	Sprayed Fiber Thickness (in.)			
5/16	8	8	8	8
7/16	8	8	8	8
1/2	8	8	8	8

9/16	8	8	8	8
5/8	8	8	8	8
11/16	8	8	8	8
3/4	8	8	8	8
13/16	8	8	8	8
7/8	8	8	8	8
1	8	8	8	8
1-1/16	8	8	8	8
1-1/8	8	8	8	8
1-3/16	8	8	8	8
1-5/16	7-3/4	8	8	8
1-3/8	7-1/2	8	8	8
1-7/16	7-1/4	8	8	8
1-9/16	6-11/16	8	8	8
1-5/8	6-7/16	8	7-7/8	8
1-3/4	5-7/8	8	6-7/16	8
1-13/16	5-5/8	8	5-11/16	7-1/8
2	4-13/16	7-1/16	3-9/16	4-7/16
2-1/16	4-9/16	6-11/16	2-7/8	3-9/16
2-1/8	4-5/16	6-5/16	2-1/8	2-11/16
2-3/16	4	5-7/8	1-7/16	1-13/16
2-5/16	3-1/2	5-1/8	0	0
2-3/8	3-3/16	4-11/16	0	0
2-11/16	1-14/16	2-12/16	0	0
2-3/4	1-10/16	2-6/16	0	0
3-1/8	0	0	0	0

INTERNATIONAL CELLULOSE CORP — Type K13, URE-K, or SonaSpray FC

4D. **Sprayed Fiber* —** (Optional, Not Shown) Sprayed Fiber, Classified for Surface Burning Characteristics (BNST), having a maximum applied density of 2.8 pcf applied over both Steel Floor and Form Units (Item 3 and 3A) and over Spray-Applied Fire Resistive Material (Item 4 through 4B) on Supports. Sprayed Fiber may be applied to the underside of Steel Floor and Form Units (Item 3 and 3A) at an unlimited thickness. Sprayed Fiber may be applied over Spray-Applied Fire Resistive Material (Item 4 through 4B) on Supports according to the following table:

Allowable Sprayed Fiber Thickness over SFRM applied to Beams

Installed SFRM Thickness (in.) on Beam	SFRM Density (lb/ft^3)			
	15	22	40	50
	Sprayed Fiber Thickness (in.)			
5/16	5	5	5	5
7/16	5	5	5	5
1/2	5	5	5	5
9/16	5	5	5	5
5/8	5	5	5	5
11/16	5	5	5	5
3/4	5	5	5	5
13/16	5	5	5	5
7/8	5	5	5	5
1	5	5	5	5
1-1/16	5	5	5	5
1-1/8	5	5	5	5
1-3/16	5	5	5	5
1-5/16	5	5	5	5
1-3/8	5	5	5	5
1-7/16	5	5	5	5
1-9/16	5	5	5	5
1-5/8	5	5	5	5
1-3/4	5	5	5	5
1-13/16	5	5	5	5
2	5	5	4 7/16	5
2-1/16	5	5	3 9/16	4 7/16
2-1/8	5	5	2 11/16	3 3/8
2-3/16	5	5	1 13/16	2 1/4
2-5/16	4 3/8	5	0	0
2-3/8	4	5	0	0
2-11/16	2 3/8	3 7/16	0	0
2-3/4	2	2 15/16	0	0

3-1/8	0	0	0	0

MONOGLASS INC — Type Monoglass

4E. **Sprayed Fiber* —** (Optional, Not Shown) Sprayed Fiber, Classified for Noncombustible Building Materials (BICW), having a maximum applied density of 3.5 pcf applied over both Steel Floor and Form Units (Item 3 and 3A) and over Spray-Applied Fire Resistive Material (Item 4 through 4B) on Supports. Sprayed Fiber may be applied to the underside of Steel Floor and Form Units (Item 3 and 3A) at an unlimited thickness. Sprayed Fiber may be applied over Spray-Applied Fire Resistive Material (Item 4 through 4B) on Supports according to the following table:

Allowable Sprayed Fiber Thickness over SFRM applied to Beams

Installed SFRM Thickness (in.) on Beam	**SFRM Density (lb/ft^3)**			
	15	**22**	**40**	**50**
	Sprayed Fiber Thickness (in.)			
5/16	5	5	5	5
7/16	5	5	5	5
1/2	5	5	5	5
9/16	5	5	5	5
5/8	5	5	5	5
11/16	5	5	5	5
3/4	5	5	5	5
13/16	5	5	5	5
7/8	5	5	5	5
1	5	5	5	5
1-1/16	5	5	5	5
1-1/8	5	5	5	5
1-3/16	5	5	5	5
1-5/16	5	5	5	5
1-3/8	5	5	5	5
1-7/16	5	5	5	5
1-9/16	5	5	5	5
1-5/8	5	5	5	5
1-3/4	5	5	5	5
1-13/16	5	5	5	5
2	4-13/16	5	3-9/16	4-7/16
2-1/16	4-9/16	5	2-7/8	3-9/16

2-1/8	4-5/16	5	2-1/8	2-11/16
2-3/16	4	5	1-7/16	1-13/16
2-5/16	3-1/2	5	0	0
2-3/8	3-3/16	4-11/16	0	0
2-11/16	1-7/8	2-3/4	0	0
2-3/4	1-5/8	2-3/8	0	0
3-1/8	0	0	0	0

THERMACOUSTIC IND. — Type TC-417

5. **Shear-Connector-Studs-Optional —** Studs 3/4 in. diam by 3 in. long, for 1-1/2 in. deep form units to 5-1/4 in. long for 3 in. deep form units, headed type or equivalent per AISC specifications. Welded to the top flange of the beam through the steel form units.

6. **Electrical Inserts —** (Not shown) Classified as "Outlet Boxes and Fittings Classified for Fire Resistance".
H H ROBERTSON — Preset Inserts.

For use with 2-1/2 in. lightweight concrete topping over QL-WKX steel floor units. Installed over factory-punched holes in floor units per accompanying installation instructions. Spacing shall not be more than one insert in each 14 sq ft of floor area with spacing along floor units not less than 48 in. OC. The holes cut in insert cover for passage of wires shall be no more than 1/8 in. larger diam than wire. Restrained Assembly Rating is 3/4 hr with Tapmate II-FS-1 and 1 hr with Tapmate II-FS-2 inserts.

H H ROBERTSON — Tapmate II-FS-1, II-FS-2; Series KEB.

WIREMOLD CO — After set Inserts. Single-service after set inserts installed per accompanying installation instructions in 2-1/2 in. diam hole core-drilled through min 3-1/4 in. thick concrete topping to top of cell of any min 3 in. deep cellular steel floor unit specified under Item 3. Spacing shall be no more than one insert in each 10 sq ft of floor area in each span with a min center to center spacing of 16 in. If the high potential and low potential raceways of the cellular steel floor unit are separated by a valley filled with concrete, the center to center spacing of the high potential and low potential single-service after set inserts may be reduced to a min of 7-1/2 in. Restrained Assembly Rating is 2 hr or less with internally protected Type 436 after set insert with Type M4-, M6- or M8- Series single-service activation fitting.

WIREMOLD CO — — Internally protected Type 436 after set insert with Type M4-, M6- or M8- Series single-service activation fitting.

7. **Roof Covering Materials* —** (Optional, not shown) Consisting of materials compatible with insulations described herein which provide Class A, B or C coverings. See Roofing Materials and Systems Directory - Roof Covering Materials (TEVT).

8. **Insulating Concrete —** (not shown) Optional. Various types of insulating concrete prepared and applied in the thickness indicated:
A. **Vermiculite Concrete —** (not shown) Optional.
1. Blend 6 to 8 cu ft of Vermiculite Aggregate* to 94 lb Portland Cement and air entraining agent. Min thickness of 2 in. as measured to the top surface of the structural concrete or foamed plastic (Item 9) when it is used.
SIPLAST INC

VERMICULITE PRODUCTS INC

2. Blend 3.5 cu ft. of Type NVC Concrete Aggregate* or Type NVS Vermiculite Aggregate* to 94 lb Portland Cement. Slurry coat, 1/8 in. thickness beneath foamed plastic (Item 9) when used, 1 in. min topping thickness.
SIPLAST INC

VERMICULITE PRODUCTS INC

Vermiculite concrete may be covered with Roof Covering Materials (Item 7).

B. **Cellular Concrete-Roof Topping Mixture* —** Concentrate mixed with water and Portland Cement per manufacturers specifications. Min. thickness of 2-in. as measured to the top surface of the structural concrete or foamed plastic (Item 9) when used. 28-day min compressive strength of 190 psi as determined with ASTM C495-66.
CELCORE INC — Type Celcore with cast dry density of 31 (+ or - 3.0) pcf or Type Celcore MF with cast dry density of 29 (+ or - 3.0) pcf.

AERIX INDUSTRIES — Cast dry density of 37 (+ or -) 3.0 pcf.

ELASTIZELL CORP OF AMERICA — Type II. Mix #1 of cast dry density 39 (+ or -) 3.0 pcf, Mix #2 of cast dry density 40 (+ or -) 3.0 pcf, Mix #3 of cast dry density 47 (+ or -) 3.0 pcf.

SIPLAST INC — Mix No. 1 or 2. Cast dry density of 32+3 (Mix No. 1) or 36+3 (mix No. 2) pcf.

C. **Perlite Concrete —** Mix consists of 6.2 cu ft Perlite Aggregate* to 94 lbs of Portland cement and 1-1/2 pt air entraining agent. Compressive strength 80 psi min.
See Perlite Aggregate (CFFX) category for names of Classified companies.

D. **Cellular Concrete-Roof Topping Mixture* —** Foam Concentrate mixed with water, Portland Cement and UL Classified Vermiculite Aggregate per manufacturer's application instructions. Cast dry density of 33 (+ or -) 3.0 pcf and 28-day compressive strength of min 250 psi as determined in accordance with ASTM C495-86.
AERIX INDUSTRIES — Mix No. 3.

SIPLAST INC — Mix No. 3.

E. **Floor Topping Mixture* (Optional, not shown) —** Approx 4.5 gal of water to 41 lbs of NVS Premix floor topping mixture. Slurry coat 1/8 in. thickness beneath foamed plastic (Item 9) when used, 1 in. min topping thickness.
SIPLAST INC

Floor Topping Mixture may be covered with Built-Up or Single Membrane Roof Covering.

9. **Foamed Plastic* —** (Optional-not shown) For use only with vermiculate or cellular concretes or Floor Topping mixture (Item 8E) - Rigid polystyrene foamed plastic insulation having slots and/or holes sandwiched between vermiculite concrete slurry which is applied to the normal or lightweight concrete surface and concrete topping.
SIPLAST INC

VERMICULITE PRODUCTS INC

10. **Roof Insulation-Mineral and Fiber Boards* or Foamed Plastic* —** (Optional, not shown, Not for use with Item 3A)) — Mineral and fiber boards or polyisocyanurate roof insulation applied over concrete floor with no restriction on board thickness. When mineral and fiber boards or polyisocyanurate roof insulation are used the unrestrained beam rating shall be increased by a min of 1/2 hr. See Mineral and Fiber Boards (CERZ) or Foamed Plastic (CCVW) category for names of Manufacturers.

11. **Roof Insulation-Mineral and Fiber Boards* or Foamed Plastic* —** (Optional, not shown, Not for use with Item 3A)) — Mineral and fiber boards or polyisocyanurate roof insulation applied over concrete floor with no restriction on board thickness. When mineral and fiber boards or polyisocyanurate roof insulation are used the thickness of Spray-Applied Fire Resistive Materials shown in the table below are applicable when the thickness applied to the beams' lower flange edges is reduced by one-half and the beams are supporting solid concrete slabs or floor assemblies containing only fluted floor or form units with lightweight concrete. The table below is applicable when W8x28 or alternate (per BXUV Category Guide in the front of the Fire Resistance Directory) steel beam is used. See Mineral and Fiber Boards (CERZ) or Foamed Plastic (CCVW) category for names of Manufacturers.

	Min Thkns In.	
Rating Hr	**Restrained Beam**	**Unrestrained Beam**
1	7/16+	3/4
1-1/2	11/16	1

2	15/16	1-1/4
3	1-7/16	1-11/16

+ Thickness applied to beams' lower flange edges shall be a min of 1/4 in.

*** Indicates such products shall bear the UL or cUL Certification Mark for jurisdictions employing the UL or cUL Certification (such as Canada), respectively.**

Last Updated on 2022-11-19

The appearance of a company's name or product in this database does not in itself assure that products so identified have been manufactured under UL Solutions' Follow - Up Service. Only those products bearing the UL Mark should be considered to be Certified and covered under UL Solutions' Follow - Up Service. Always look for the Mark on the product.

UL Solutions permits the reproduction of the material contained in Product iQ subject to the following conditions: 1. The Guide Information, Assemblies, Constructions, Designs, Systems, and/or Certifications (files) must be presented in their entirety and in a non-misleading manner, without any manipulation of the data (or drawings). 2. The statement "Reprinted from Product iQ with permission from UL Solutions" must appear adjacent to the extracted material. In addition, the reprinted material must include a copyright notice in the following format: "©2023 UL LLC."

UL Product iQ®

BXUV.N852 - Fire-resistance Ratings - ANSI/UL 263

Design/System/Construction/Assembly Usage Disclaimer

- Authorities Having Jurisdiction should be consulted in all cases as to the particular requirements covering the installation and use of UL Certified products, equipment, system, devices, and materials.
- Authorities Having Jurisdiction should be consulted before construction.
- Fire resistance assemblies and products are developed by the design submitter and have been investigated by UL for compliance with applicable requirements. The published information cannot always address every construction nuance encountered in the field.
- When field issues arise, it is recommended the first contact for assistance be the technical service staff provided by the product manufacturer noted for the design. Users of fire resistance assemblies are advised to consult the general Guide Information for each product category and each group of assemblies. The Guide Information includes specifics concerning alternate materials and alternate methods of construction.
- Only products which bear UL's Mark are considered Certified.

Fire-resistance Ratings - ANSI/UL 263

BXUV - Fire Resistance Ratings - ANSI/UL 263 Certified for United States
BXUV7 - Fire Resistance Ratings - CAN/ULC-S101 Certified for Canada

Design No. N852

Restrained Beam Ratings — 1, 1-1/2, 2, 3 and 4 Hr
Unrestrained Beam Ratings — 1, 1-1/2, 2, 3 and 4 Hr
Loading Determined by Allowable Stress Design Method or Load and Resistance Factor Design Method published by the American Institute of Steel Construction, or in accordance with the relevant Limit State Design provisions of Part 4 of the National Building Code of Canada
*** Indicates such products shall bear the UL or cUL Certification Mark for jurisdictions employing the UL or cUL Certification (such as Canada), respectively.**

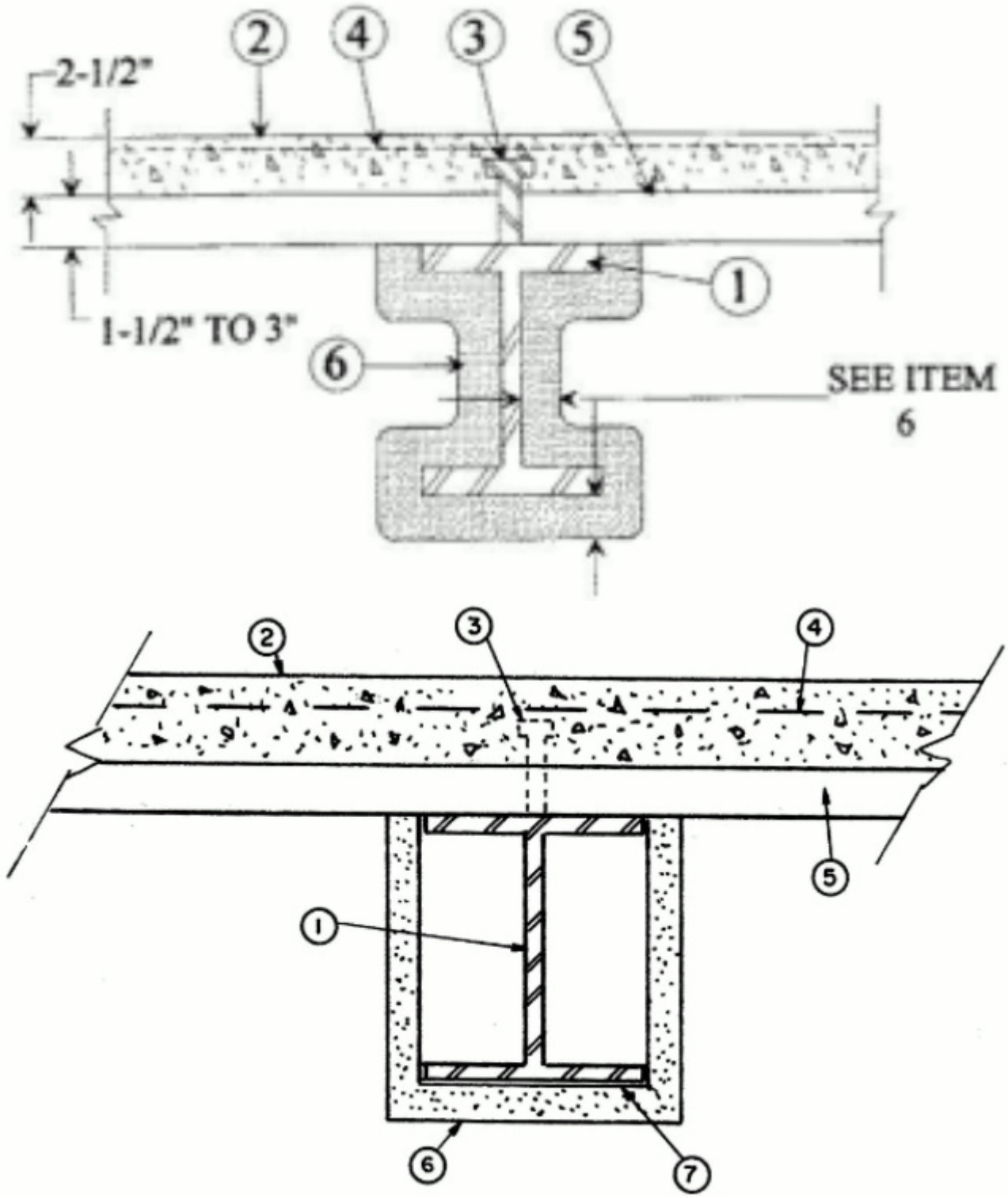

1. **Steel Beam —** W8x28 min size.

2. **Normal Weight Concrete —** Compressive strength, 4000 psi. Either carbonate or siliceous aggregate may be used. Unit weight, 145 +/- 3 pcf.

2A. **Light Weight Concrete —** Compressive strength, 3000 psi. Either expanded shale, clay or slate aggregate by rotary-kiln method. Unit weight, 110 +/- 3 pcf.

3. **Shear Connector —** (Optional) — Studs, 3/4 in. diam headed type or equivalent per AISC specifications. Welded to the top flange of beam through the steel floor units.

4. **Welded Wire Fabric —** (Optional) — 6x6-10/10 SWG.

5. **Steel Floor and Form Units* —** 1-5/16 in. deep corrugated units; or 1-1/2 to 3 in. deep fluted or cellular units welded to beam.

6. **Spray-Applied Fire Resistive Materials* —** Applied by mixing with water and spraying in more than one coat to the beam to the final thicknesses shown below. Crest areas shall be filled with Spray-Applied Fire Resistive Materials above the beam. Beam surfaces must be clean and free of dirt, loose scale and oil. Min average and min ind. density of 15/14 pcf respectively. Min avg and min ind density of 22/19 pcf respectively for Types Z-106, Z-106/HY , Z-106/G. Min avg and min ind density of 40/36 pcf respectively for Types AV650, Z-146, Z-146PC and Z-146T cementitious mixture. Min avg and min ind density of 50/45 pcf respectively for Types AV800, Z-156, Z-156T and Z-156PC. For method of density determination, see Design Information Section.
The thickness of Spray-Applied Fire Resistive Materials shown in the table below are only applicable when the beams are supporting floor assemblies containing only fluted floor and form units, topped with normal weight concrete (Item 2).

	Min Thkns In.	
Rating Hr	**Restrained Beam**	**Unrestrained Beam**
1	5/16	5/16
1-1/2	7/16	9/16
2	11/16	13/16
2(+)	9/16	11/16
3	1-3/16	1-5/16
3(+)	15/16	1-5/16
4	1-11/16	1-7/8

(+) Rating applicable only when a minimum of 4-1/2 in. of normal weight concrete provided over deck crests.

The thickness of Spray-Applied Fire Resistive Materials shown in the table below are only applicable when the beams are supporting floor assemblies containing corrugated or cellular floor and form units, topped with normal weight concrete (Item 2).

	Min Thkns In.	
Rating Hr	**Restrained Beam**	**Unrestrained Beam**
1	3/8	3/8
1-1/2	9/16	11/16
2	7/8	1-1/16
2(+)	3/4	15/16
3	1-9/16	1-11/16
3(#)	1-7/16	1-9/16
4	2-1/4	2-7/16

(+) Rating applicable only when a minimum of 4-1/2 in. of normal weight concrete provided over deck crests.

(#) Rating applicable only when a minimum of 5-1/4 in. of normal weight concrete provide over deck crests.

The thickness of Spray-Applied Fire Resistive Materials shown in the table below are applicable when the thickness applied to the beams' lower flange edges is reduced by one-half and the beams are supporting solid concrete slabs or floor assemblies containing only fluted floor or form units with normal weight concrete (Item 2).

	Min Thkns In.	
Rating Hr	**Restrained Beam**	**Unrestrained Beam**
1	3/8	3/8
1-1/2	7/16	5/8
2	11/16	7/8
2(+)	9/16	13/16
3	1-3/16	1-7/16
3(#)	1-1/16	1-3/8
4	1-11/16	1-15/16

(+) Rating applicable only when a minimum of 4-1/2 in. of normal weight concrete provided over deck crests.

(#) Rating applicable only when a minimum of 5-1/4 in. of normal weight concrete provide over deck crests.

The thickness of Spray-Applied Fire Resistive Materials shown in the table below are applicable when the thickness applied to the beams' lower flange edges is reduced by one-half and the beams are supporting solid concrete slabs or floor assemblies containing corrugated or cellular floor or form units with normal weight concrete (Item 2).

	Min Thkns In.	
Rating Hr	**Restrained Beam**	**Unrestrained Beam**
1	1/2	1/2
1-1/2	9/16	13/16
2	7/8	1-1/8
2(+)	3/4	1-1/16
3	1-9/16	1-7/8
3(#)	1-7/16	1-13/16
4	2-1/4	2-9/16

(+) Rating applicable only when a minimum of 4-1/2 in. of normal weight concrete provided over deck crests.

(#) Rating applicable only when a minimum of 5-1/4 in. of normal weight concrete provide over deck crests.

The thickness of Spray-Applied Fire Resistive Materials shown in the table below are only applicable when the beams are supporting floor assemblies containing only fluted floor and form units, topped with light weight concrete (Item 2A).

	Min Thkns In.	
Rating Hr	**Restrained Beam**	**Unrestrained Beam**
1	3/8	3/8
1-1/2	8/16	5/8
2	13/16	15/16
2 (+)	13/16	7/8
3	1-5/16	1-9/16

3 (+)	1-5/16	1-5/16
4	1-7/8	2-1/8

(+) Rating applicable only when a minimum of 3-1/4 in. of light weight concrete provided over deck crests.

The thickness of Spray-Applied Fire Resistive Materials shown in the table below are only applicable when the beams are supporting floor assemblies containing cellular or corrugated floor and form units, topped with light weight concrete (Item 2A).

	Min Thkns In.	
Rating Hr	**Restrained Beam**	**Unrestrained Beam**
1	1/2	1/2
1-1/2	5/8	13/16
2	1-1/16	1-3/16
3	1-11/16	2
4	2-7/16	2-13/16

The thickness of Spray-Applied Fire Resistive Materials shown in the table below are applicable when the thickness applied to the beams' lower flange edges is reduced by one-half and the beams are supporting solid concrete slabs or floor assemblies containing only fluted floor or form units with light weight concrete (Item 2A).

	Min Thkns In.	
Rating Hr	**Restrained Beam**	**Unrestrained Beam**
1	1/2	1/2
1-1/2	9/16	3/4
2	7/8	1-1/16
3	1-3/8	1-11/16
4	1-15/16	2-1/4

The thickness of Spray-Applied Fire Resistive Materials shown in the table below are applicable when the thickness applied to the beams' lower flange edges is reduced by one-half and the beams are supporting solid concrete slabs or floor assemblies containing corrugated or cellular floor or form units with light weight concrete (Item 2A).

	Min Thkns In.	
Rating Hr	**Restrained Beam**	**Unrestrained Beam**
1	5/8	11/16
1-1/2	11/16	1
2	1-1/8	1-3/8
3	1-3/4	2-3/16
4	2-1/2	3

ARABIAN VERMICULITE INDUSTRIES — Types MK-6/HY, MK-6/HY Extended Set, MK-10 HB, MK-10 HB Extended Set, MK-10/HB White, MK-10/HB White Extended Set, MK-6/HB, MK-6s, MK-6 GF, MK-6 GF Extended Set, MK-1000/HB, MK-1000/HB Extended Set, Z-106, Z-106/G, Z-106/HY, Z-146 investigated for exterior use. Types AV650 and AV800 investigated for external use.

GCP KOREA INC — Types MK-6/HY, MK-6/HY Extended Set, MK-10 HB, MK-10 HB Extended Set, MK-10/HB White, MK-10/HB White Extended Set, MK-6/HB, MK-6s, MK-6 GF, MK-6 GF Extended Set, MK-1000/HB, MK-1000/HB Extended Set, Z-106, Z-106/G, Z-106/HY, Z-146 investigated for exterior use.

GCP APPLIED TECHNOLOGIES INC — Types MK-6/HY, MK-6/HY Extended Set, MK-10 HB, MK-10 HB Extended Set, MK-10/HB White, MK-10/HB White Extended Set, MK-6/HB, MK-6s, MK-6 GF, MK-6 GF Extended Set, MK-1000/HB, MK-1000/HB Extended Set, RG, Z-106, Z-106/G, Z-106/HY, Z-146, Z-146T, Z146PC, Z-156, Z-156T and Z-156PC investigated for exterior use.

7. **Metal Lath —** (Optional for contour applications, required for boxed applications) — 3.4 lb/sq yd expanded steel. May be tied to lath hangers with No. 18 SWG steel wire spaced 6 in. OC max. or fastened directly to the steel with welds, screws, or powder actuated fasteners.

*** Indicates such products shall bear the UL or cUL Certification Mark for jurisdictions employing the UL or cUL Certification (such as Canada), respectively.**

Last Updated on 2023-01-25

The appearance of a company's name or product in this database does not in itself assure that products so identified have been manufactured under UL Solutions' Follow - Up Service. Only those products bearing the UL Mark should be considered to be Certified and covered under UL Solutions' Follow - Up Service. Always look for the Mark on the product.

UL Solutions permits the reproduction of the material contained in Product iQ subject to the following conditions: 1. The Guide Information, Assemblies, Constructions, Designs, Systems, and/or Certifications (files) must be presented in their entirety and in a non-misleading manner, without any manipulation of the data (or drawings). 2. The statement "Reprinted from Product iQ with permission from UL Solutions" must appear adjacent to the extracted material. In addition, the reprinted material must include a copyright notice in the following format: "©2023 UL LLC."

BXUV.N852

Beam for Unprotected Floor/Ceiling, Fluted or Corrugated Decking

Unrestrained Beam Thicknesses (Normal Weight Concrete)

GCP Applied Technologies Inc. — Types MK-6/HY, MK-10 HB, MK-6/HB, MK-6s, MK-6 GF, MK-6 GF Extended Set, RG, Z-106, Z-106/G, Z-106/HY, Z-146, Z-146T, Z-146 PC, Z-156, Z-156T, Z-156PC, MK-1000/HB, MK-1000/HB Extended Set

FULL FLANGE TIP THICKNESS (in.)							HALF FLANGE TIP THICKNESS (in.)				
1 hr	**1.5 hr**	**2 hr**	**3 hr**	**4 hr**	**Size x Wt**	**W/D**	**1 hr**	**1.5 hr**	**2 hr**	**3 hr**	**4 hr**
3/8	11/16	15/16	1 1/2	2 1/8	**W4 x 13**	**0.670**	7/16	3/4	1	1 5/8	2 3/16
3/8	11/16	15/16	1 1/2	2 1/8	**W5 x 16**	**0.664**	7/16	3/4	1	1 5/8	2 3/16
3/8	5/8	7/8	1 3/8	1 15/16	**W5 x 19**	**0.776**	7/16	11/16	15/16	1 1/2	2
1/2	13/16	1 3/16	1 7/8	2 11/16	**W6 x 9**	**0.398**	9/16	15/16	1 1/4	2 1/16	2 13/16
7/16	3/4	1 1/16	1 11/16	2 3/8	**W6 x 12**	**0.526**	1/2	13/16	1 1/8	1 13/16	2 1/2
7/16	3/4	1 1/16	1 11/16	2 3/8	**W6 x 15**	**0.521**	1/2	13/16	1 1/8	1 7/8	2 1/2
3/8	5/8	15/16	1 1/2	2 1/8	**W6 x 16**	**0.684**	7/16	3/4	1	1 5/8	2 3/16
3/8	5/8	15/16	1 1/2	2 1/8	**W6 x 20**	**0.678**	7/16	3/4	1	1 5/8	2 3/16
5/16	9/16	13/16	1 5/16	1 7/8	**W6 x 25**	**0.839**	3/8	5/8	7/8	1 7/16	1 15/16
1/2	7/8	1 3/16	1 15/16	2 3/4	**W8 x 10**	**0.375**	9/16	15/16	1 5/16	2 1/8	2 7/8
7/16	3/4	1 1/8	1 3/4	2 1/2	**W8 x 13**	**0.483**	1/2	7/8	1 3/16	1 15/16	2 9/16
7/16	3/4	1 1/16	1 5/8	2 5/16	**W8 x 15**	**0.551**	1/2	13/16	1 1/8	1 13/16	2 7/16
3/8	11/16	1	1 5/8	2 1/4	**W8 x 18**	**0.583**	1/2	3/4	1 1/16	1 3/4	2 3/8
3/8	11/16	15/16	1 1/2	2 1/8	**W8 x 21**	**0.675**	7/16	3/4	1	1 5/8	2 3/16
3/8	5/8	15/16	1 7/16	2 1/16	**W8 x 24**	**0.704**	7/16	11/16	1	1 5/8	2 1/8
5/16	9/16	13/16	1 5/16	1 7/8	**W8 x 28**	**0.819**	3/8	5/8	7/8	1 7/16	1 15/16
3/8	5/8	7/8	1 3/8	1 15/16	**W8 x 31**	**0.803**	7/16	11/16	15/16	1 1/2	2
5/16	9/16	13/16	1 1/4	1 13/16	**W8 x 35**	**0.907**	3/8	5/8	7/8	1 3/8	1 7/8
5/16	1/2	3/4	1 3/16	1 11/16	**W8 x 40**	**1.030**	3/8	9/16	13/16	1 5/16	1 11/16
5/16	1/2	11/16	1 1/16	1 1/2	**W8 x 48**	**1.210**	3/8	1/2	11/16	1 3/16	1 9/16
5/16	7/16	5/8	15/16	1 5/16	**W8 x 58**	**1.440**	3/8	7/16	5/8	1	1 3/8
5/16	3/8	9/16	7/8	1 3/16	**W8 x 67**	**1.650**	3/8	7/16	9/16	15/16	1 1/4
1/2	13/16	1 3/16	1 15/16	2 11/16	**W10 x 12**	**0.392**	9/16	15/16	1 5/16	2 1/16	2 13/16
7/16	3/4	1 1/8	1 3/4	2 1/2	**W10 x 15**	**0.484**	1/2	7/8	1 3/16	1 15/16	2 9/16
7/16	3/4	1 1/16	1 11/16	2 3/8	**W10 x 17**	**0.543**	1/2	13/16	1 1/8	1 13/16	2 7/16
3/8	11/16	1	1 9/16	2 1/4	**W10 x 19**	**0.607**	1/2	3/4	1 1/16	1 3/4	2 5/16
3/8	11/16	1	1 9/16	2 1/4	**W10 x 22**	**0.606**	1/2	3/4	1 1/16	1 3/4	2 5/16
3/8	5/8	15/16	1 7/16	2 1/16	**W10 x 26**	**0.708**	7/16	11/16	1	1 9/16	2 1/8
3/8	5/8	7/8	1 3/8	1 15/16	**W10 x 30**	**0.809**	7/16	11/16	15/16	1 1/2	2
3/8	5/8	7/8	1 3/8	1 15/16	**W10 x 33**	**0.786**	7/16	11/16	15/16	1 1/2	2
5/16	9/16	13/16	1 1/4	1 3/4	**W10 x 39**	**0.929**	3/8	5/8	13/16	1 3/8	1 13/16
5/16	1/2	3/4	1 1/8	1 5/8	**W10 x 45**	**1.060**	3/8	9/16	3/4	1 1/4	1 11/16
5/16	1/2	3/4	1 3/16	1 11/16	**W10 x 49**	**1.010**	3/8	9/16	13/16	1 5/16	1 3/4
5/16	1/2	11/16	1 1/8	1 9/16	**W10 x 54**	**1.110**	3/8	9/16	3/4	1 1/4	1 5/8
5/16	1/2	11/16	1 1/16	1 1/2	**W10 x 60**	**1.220**	3/8	1/2	11/16	1 1/8	1 9/16
5/16	7/16	5/8	1	1 3/8	**W10 x 68**	**1.380**	3/8	1/2	11/16	1 1/16	1 7/16
5/16	3/8	9/16	7/8	1 1/4	**W10 x 77**	**1.540**	3/8	7/16	5/8	1	1 5/16
5/16	3/8	1/2	13/16	1 3/16	**W10 x 88**	**1.740**	3/8	7/16	9/16	7/8	1 3/16
5/16	3/8	1/2	3/4	1 1/16	**W10 x 100**	**1.970**	3/8	3/8	1/2	13/16	1 1/8
5/16	3/8	7/16	11/16	1	**W10 x 112**	**2.170**	3/8	3/8	1/2	3/4	1
1/2	13/16	1 3/16	1 7/8	2 11/16	**W12 x 14**	**0.405**	9/16	15/16	1 1/4	2 1/16	2 3/4
7/16	13/16	1 1/8	1 13/16	2 9/16	**W12 x 16**	**0.457**	9/16	7/8	1 3/16	1 15/16	2 5/8
7/16	3/4	1 1/16	1 11/16	2 3/8	**W12 x 19**	**0.540**	1/2	13/16	1 1/8	1 13/16	2 7/16
3/8	11/16	1	1 9/16	2 3/16	**W12 x 22**	**0.623**	7/16	3/4	1 1/16	1 11/16	2 1/4
3/8	11/16	1	1 9/16	2 1/4	**W12 x 26**	**0.612**	1/2	3/4	1 1/16	1 11/16	2 5/16
3/8	5/8	15/16	1 7/16	2 1/16	**W12 x 30**	**0.699**	7/16	11/16	1	1 5/8	2 1/8
3/8	5/8	7/8	1 3/8	1 15/16	**W12 x 35**	**0.810**	7/16	11/16	15/16	1 1/2	2
5/16	9/16	13/16	1 5/16	1 7/8	**W12 x 40**	**0.860**	3/8	5/8	7/8	1 7/16	1 15/16
5/16	9/16	3/4	1 3/16	1 3/4	**W12 x 45**	**0.974**	3/8	5/8	13/16	1 5/16	1 3/4
5/16	1/2	3/4	1 1/8	1 5/8	**W12 x 50**	**1.060**	3/8	9/16	3/4	1 1/4	1 11/16
5/16	1/2	3/4	1 3/16	1 11/16	**W12 x 53**	**1.020**	3/8	9/16	13/16	1 5/16	1 3/4
5/16	1/2	11/16	1 1/8	1 5/8	**W12 x 58**	**1.100**	3/8	9/16	3/4	1 1/4	1 5/8
5/16	1/2	11/16	1 1/8	1 9/16	**W12 x 65**	**1.110**	3/8	9/16	3/4	1 1/4	1 5/8
5/16	7/16	11/16	1 1/16	1 1/2	**W12 x 72**	**1.230**	3/8	1/2	11/16	1 1/8	1 9/16
5/16	7/16	5/8	1	1 3/8	**W12 x 79**	**1.340**	3/8	1/2	11/16	1 1/16	1 7/16
5/16	7/16	9/16	15/16	1 5/16	**W12 x 87**	**1.470**	3/8	7/16	5/8	1	1 3/8
5/16	3/8	9/16	7/8	1 1/4	**W12 x 96**	**1.610**	3/8	7/16	9/16	15/16	1 1/4
5/16	3/8	1/2	13/16	1 1/8	**W12 x 106**	**1.770**	3/8	3/8	9/16	7/8	1 3/16
5/16	3/8	1/2	3/4	1 1/16	**W12 x 120**	**1.990**	3/8	3/8	1/2	13/16	1 1/16
5/16	3/8	7/16	11/16	1	**W12 x 136**	**2.230**	3/8	3/8	1/2	3/4	1

BXUV.N852

Beam for Unprotected Floor/Ceiling, Fluted or Corrugated Decking

Unrestrained Beam Thicknesses (Normal Weight Concrete)

GCP Applied Technologies Inc. — Types MK-6/HY, MK-10 HB, MK-6/HB, MK-6s, MK-6 GF, MK-6 GF Extended Set, RG, Z-106, Z-106/G, Z-106/HY, Z-146, Z-146T, Z-146 PC, Z-156, Z-156T, Z-156PC, MK-1000/HB, MK-1000/HB Extended Set

FULL FLANGE TIP THICKNESS (in.)							HALF FLANGE TIP THICKNESS (in.)				
1 hr	**1.5 hr**	**2 hr**	**3 hr**	**4 hr**	**Size x Wt**	**W/D**	**1 hr**	**1.5 hr**	**2 hr**	**3 hr**	**4 hr**
5/16	3/8	7/16	5/8	7/8	**W12 x 152**	**2.450**	3/8	3/8	7/16	11/16	15/16
5/16	3/8	3/8	9/16	13/16	**W12 x 170**	**2.720**	3/8	3/8	3/8	5/8	7/8
5/16	3/8	3/8	9/16	3/4	**W12 x 190**	**3.000**	3/8	3/8	3/8	5/8	13/16
5/16	3/8	3/8	1/2	11/16	**W12 x 210**	**3.270**	3/8	3/8	3/8	9/16	3/4
5/16	3/8	3/8	1/2	11/16	**W12 x 230**	**3.550**	3/8	3/8	3/8	1/2	11/16
5/16	3/8	3/8	7/16	5/8	**W12 x 252**	**3.840**	3/8	3/8	3/8	1/2	5/8
5/16	3/8	3/8	7/16	9/16	**W12 x 279**	**4.190**	3/8	3/8	3/8	7/16	5/8
5/16	3/8	3/8	3/8	9/16	**W12 x 305**	**4.490**	3/8	3/8	3/8	7/16	9/16
5/16	3/8	3/8	3/8	1/2	**W12 x 336**	**4.850**	3/8	3/8	3/8	3/8	9/16
7/16	3/4	1 1/16	1 11/16	2 3/8	**W14 x 22**	**0.534**	1/2	13/16	1 1/8	1 13/16	2 7/16
3/8	11/16	1	1 9/16	2 3/16	**W14 x 26**	**0.628**	7/16	3/4	1 1/16	1 11/16	2 1/4
3/8	11/16	15/16	1 1/2	2 3/16	**W14 x 30**	**0.644**	7/16	3/4	1	1 11/16	2 1/4
3/8	5/8	7/8	1 7/16	2 1/16	**W14 x 34**	**0.725**	7/16	11/16	15/16	1 9/16	2 1/8
3/8	5/8	7/8	1 3/8	1 15/16	**W14 x 38**	**0.809**	7/16	11/16	15/16	1 1/2	2
5/16	9/16	13/16	1 5/16	1 13/16	**W14 x 43**	**0.874**	3/8	5/8	7/8	1 7/16	1 7/8
5/16	9/16	3/4	1 3/16	1 3/4	**W14 x 48**	**0.970**	3/8	5/8	13/16	1 5/16	1 13/16
5/16	1/2	3/4	1 1/8	1 5/8	**W14 x 53**	**1.060**	3/8	9/16	3/4	1 1/4	1 11/16
5/16	1/2	11/16	1 1/8	1 5/8	**W14 x 61**	**1.100**	3/8	9/16	3/4	1 1/4	1 5/8
5/16	1/2	11/16	1 1/16	1 1/2	**W14 x 68**	**1.220**	3/8	1/2	11/16	1 1/8	1 9/16
5/16	7/16	5/8	1	1 7/16	**W14 x 74**	**1.320**	3/8	1/2	11/16	1 1/16	1 7/16
5/16	7/16	9/16	15/16	1 5/16	**W14 x 82**	**1.450**	3/8	7/16	5/8	1	1 3/8
5/16	7/16	5/8	1	1 7/16	**W14 x 90**	**1.310**	3/8	1/2	11/16	1 1/8	1 1/2
5/16	7/16	5/8	15/16	1 5/16	**W14 x 99**	**1.430**	3/8	7/16	5/8	1 1/16	1 3/8
5/16	3/8	9/16	7/8	1 1/4	**W14 x 109**	**1.570**	3/8	7/16	5/8	1	1 5/16
5/16	3/8	1/2	13/16	1 3/16	**W14 x 120**	**1.710**	3/8	7/16	9/16	15/16	1 1/4
5/16	3/8	1/2	3/4	1 1/8	**W14 x 132**	**1.890**	3/8	3/8	1/2	7/8	1 1/8
5/16	3/8	1/2	3/4	1 1/16	**W14 x 145**	**1.990**	3/8	3/8	1/2	13/16	1 1/16
5/16	3/8	7/16	11/16	1	**W14 x 159**	**2.160**	3/8	3/8	1/2	3/4	1
5/16	3/8	7/16	5/8	15/16	**W14 x 176**	**2.380**	3/8	3/8	7/16	11/16	15/16
5/16	3/8	3/8	5/8	7/8	**W14 x 193**	**2.600**	3/8	3/8	7/16	11/16	7/8
5/16	3/8	3/8	9/16	13/16	**W14 x 211**	**2.810**	3/8	3/8	3/8	5/8	13/16
5/16	3/8	3/8	9/16	3/4	**W14 x 233**	**3.080**	3/8	3/8	3/8	9/16	3/4
5/16	3/8	3/8	1/2	11/16	**W14 x 257**	**3.360**	3/8	3/8	3/8	9/16	3/4
5/16	3/8	3/8	7/16	5/8	**W14 x 283**	**3.660**	3/8	3/8	3/8	1/2	11/16
5/16	3/8	3/8	7/16	5/8	**W14 x 311**	**3.980**	3/8	3/8	3/8	1/2	5/8
5/16	3/8	3/8	7/16	9/16	**W14 x 342**	**4.320**	3/8	3/8	3/8	7/16	9/16
5/16	3/8	3/8	3/8	9/16	**W14 x 370**	**4.630**	3/8	3/8	3/8	7/16	9/16
5/16	3/8	3/8	3/8	1/2	**W14 x 398**	**4.930**	3/8	3/8	3/8	3/8	1/2
5/16	3/8	3/8	3/8	1/2	**W14 x 426**	**5.210**	3/8	3/8	3/8	3/8	1/2
5/16	3/8	3/8	3/8	7/16	**W14 x 455**	**5.530**	3/8	3/8	3/8	3/8	1/2
5/16	3/8	3/8	3/8	7/16	**W14 x 500**	**5.950**	3/8	3/8	3/8	3/8	7/16
5/16	3/8	3/8	3/8	7/16	**W14 x 550**	**6.430**	3/8	3/8	3/8	3/8	7/16
5/16	3/8	3/8	3/8	3/8	**W14 x 605**	**6.960**	3/8	3/8	3/8	3/8	3/8
5/16	3/8	3/8	3/8	3/8	**W14 x 665**	**7.490**	3/8	3/8	3/8	3/8	3/8
5/16	3/8	3/8	3/8	3/8	**W14 x 730**	**8.080**	3/8	3/8	3/8	3/8	3/8
7/16	3/4	1	1 5/8	2 5/16	**W16 x 26**	**0.558**	1/2	13/16	1 1/8	1 13/16	2 3/8
3/8	11/16	15/16	1 1/2	2 1/8	**W16 x 31**	**0.661**	7/16	3/4	1	1 5/8	2 3/16
3/8	5/8	15/16	1 7/16	2 1/16	**W16 x 36**	**0.702**	7/16	11/16	1	1 5/8	2 1/8
3/8	5/8	7/8	1 3/8	1 15/16	**W16 x 40**	**0.780**	7/16	11/16	15/16	1 1/2	2
5/16	9/16	13/16	1 5/16	1 13/16	**W16 x 45**	**0.870**	3/8	5/8	7/8	1 7/16	1 7/8
5/16	9/16	3/4	1 1/4	1 3/4	**W16 x 50**	**0.962**	3/8	5/8	13/16	1 5/16	1 13/16
5/16	1/2	11/16	1 1/8	1 5/8	**W16 x 57**	**1.090**	3/8	9/16	3/4	1 1/4	1 11/16
5/16	1/2	11/16	1 1/8	1 5/8	**W16 x 67**	**1.090**	3/8	9/16	3/4	1 1/4	1 11/16
5/16	7/16	5/8	1 1/16	1 1/2	**W16 x 77**	**1.250**	3/8	1/2	11/16	1 1/8	1 1/2
5/16	7/16	5/8	15/16	1 5/16	**W16 x 89**	**1.430**	3/8	7/16	5/8	1 1/16	1 3/8
5/16	3/8	9/16	7/8	1 1/4	**W16 x 100**	**1.590**	3/8	7/16	5/8	15/16	1 5/16
3/8	11/16	15/16	1 1/2	2 1/8	**W18 x 35**	**0.672**	7/16	3/4	1	1 5/8	2 3/16
3/8	5/8	7/8	1 3/8	2	**W18 x 40**	**0.768**	7/16	11/16	15/16	1 1/2	2 1/16
5/16	9/16	13/16	1 5/16	1 13/16	**W18 x 46**	**0.876**	3/8	5/8	7/8	1 7/16	1 7/8
5/16	9/16	13/16	1 5/16	1 13/16	**W18 x 50**	**0.880**	3/8	5/8	7/8	1 7/16	1 7/8

BXUV.N852

Beam for Unprotected Floor/Ceiling, Fluted or Corrugated Decking

Unrestrained Beam Thicknesses (Normal Weight Concrete)

GCP Applied Technologies Inc. — Types MK-6/HY, MK-10 HB, MK-6/HB, MK-6s, MK-6 GF, MK-6 GF Extended Set, RG, Z-106, Z-106/G, Z-106/HY, Z-146, Z-146T, Z-146 PC, Z-156, Z-156T, Z-156PC, MK-1000/HB, MK-1000/HB Extended Set

FULL FLANGE TIP THICKNESS (in.)							HALF FLANGE TIP THICKNESS (in.)				
1 hr	**1.5 hr**	**2 hr**	**3 hr**	**4 hr**	**Size x Wt**	**W/D**	**1 hr**	**1.5 hr**	**2 hr**	**3 hr**	**4 hr**
5/16	7/16	9/16	15/16	1 5/16	**W36 x 160**	**1.510**	3/8	7/16	5/8	1	1 5/16
5/16	3/8	9/16	7/8	1 1/4	**W36 x 170**	**1.600**	3/8	7/16	5/8	15/16	1 1/4
5/16	3/8	1/2	13/16	1 3/16	**W36 x 182**	**1.720**	3/8	7/16	9/16	15/16	1 3/16
5/16	3/8	1/2	13/16	1 1/8	**W36 x 194**	**1.810**	3/8	3/8	9/16	7/8	1 3/16
5/16	3/8	1/2	3/4	1 1/16	**W36 x 210**	**1.960**	3/8	3/8	1/2	13/16	1 1/8
5/16	3/8	1/2	3/4	1 1/16	**W36 x 230**	**1.950**	3/8	3/8	1/2	13/16	1 1/8
5/16	3/8	7/16	3/4	1	**W36 x 245**	**2.080**	3/8	3/8	1/2	13/16	1 1/16
5/16	3/8	7/16	11/16	15/16	**W36 x 256**	**2.370**	3/8	3/8	7/16	11/16	15/16
5/16	3/8	7/16	11/16	1	**W36 x 260**	**2.180**	3/8	3/8	1/2	3/4	1
5/16	3/8	7/16	11/16	15/16	**W36 x 280**	**2.350**	3/8	3/8	7/16	3/4	15/16
5/16	3/8	3/8	5/8	7/8	**W36 x 300**	**2.500**	3/8	3/8	7/16	11/16	15/16
1/2	7/8	1 1/4	1 15/16	2 3/4	**Other**	**0.37**	9/16	15/16	1 5/16	2 1/8	2 7/8
1/2	7/8	1 3/16	1 15/16	2 3/4	**Other**	**0.38**	9/16	15/16	1 5/16	2 1/8	2 13/16
1/2	13/16	1 3/16	1 15/16	2 11/16	**Other**	**0.39**	9/16	15/16	1 5/16	2 1/16	2 13/16
1/2	13/16	1 3/16	1 7/8	2 11/16	**Other**	**0.40**	9/16	15/16	1 1/4	2 1/16	2 3/4
1/2	13/16	1 3/16	1 7/8	2 11/16	**Other**	**0.41**	9/16	15/16	1 1/4	2 1/16	2 3/4
7/16	13/16	1 3/16	1 7/8	2 5/8	**Other**	**0.42**	9/16	7/8	1 1/4	2	2 3/4
7/16	13/16	1 1/8	1 13/16	2 5/8	**Other**	**0.43**	9/16	7/8	1 1/4	2	2 11/16
7/16	13/16	1 1/8	1 13/16	2 9/16	**Other**	**0.44**	9/16	7/8	1 1/4	2	2 11/16
7/16	13/16	1 1/8	1 13/16	2 9/16	**Other**	**0.45**	9/16	7/8	1 3/16	2	2 5/8
7/16	13/16	1 1/8	1 13/16	2 9/16	**Other**	**0.46**	9/16	7/8	1 3/16	1 15/16	2 5/8
7/16	3/4	1 1/8	1 3/4	2 1/2	**Other**	**0.47**	1/2	7/8	1 3/16	1 15/16	2 5/8
7/16	3/4	1 1/8	1 3/4	2 1/2	**Other**	**0.48**	1/2	7/8	1 3/16	1 15/16	2 9/16
7/16	3/4	1 1/16	1 3/4	2 1/2	**Other**	**0.49**	1/2	7/8	1 3/16	1 7/8	2 9/16
7/16	3/4	1 1/16	1 3/4	2 7/16	**Other**	**0.50**	1/2	13/16	1 3/16	1 7/8	2 1/2
7/16	3/4	1 1/16	1 11/16	2 7/16	**Other**	**0.51**	1/2	13/16	1 1/8	1 7/8	2 1/2
7/16	3/4	1 1/16	1 11/16	2 7/16	**Other**	**0.52**	1/2	13/16	1 1/8	1 7/8	2 1/2
7/16	3/4	1 1/16	1 11/16	2 3/8	**Other**	**0.53**	1/2	13/16	1 1/8	1 13/16	2 7/16
7/16	3/4	1 1/16	1 11/16	2 3/8	**Other**	**0.54**	1/2	13/16	1 1/8	1 13/16	2 7/16
7/16	3/4	1 1/16	1 5/8	2 3/8	**Other**	**0.55**	1/2	13/16	1 1/8	1 13/16	2 7/16
7/16	3/4	1	1 5/8	2 5/16	**Other**	**0.56**	1/2	13/16	1 1/8	1 13/16	2 3/8
7/16	11/16	1	1 5/8	2 5/16	**Other**	**0.57**	1/2	13/16	1 1/16	1 3/4	2 3/8
7/16	11/16	1	1 5/8	2 5/16	**Other**	**0.58**	1/2	13/16	1 1/16	1 3/4	2 3/8
3/8	11/16	1	1 5/8	2 1/4	**Other**	**0.59**	1/2	3/4	1 1/16	1 3/4	2 5/16
3/8	11/16	1	1 9/16	2 1/4	**Other**	**0.60**	1/2	3/4	1 1/16	1 3/4	2 5/16
3/8	11/16	1	1 9/16	2 1/4	**Other**	**0.61**	1/2	3/4	1 1/16	1 11/16	2 5/16
3/8	11/16	1	1 9/16	2 3/16	**Other**	**0.62**	7/16	3/4	1 1/16	1 11/16	2 5/16
3/8	11/16	15/16	1 9/16	2 3/16	**Other**	**0.63**	7/16	3/4	1 1/16	1 11/16	2 1/4
3/8	11/16	15/16	1 9/16	2 3/16	**Other**	**0.64**	7/16	3/4	1 1/16	1 11/16	2 1/4
3/8	11/16	15/16	1 1/2	2 3/16	**Other**	**0.65**	7/16	3/4	1	1 11/16	2 1/4
3/8	11/16	15/16	1 1/2	2 1/8	**Other**	**0.66**	7/16	3/4	1	1 5/8	2 3/16
3/8	11/16	15/16	1 1/2	2 1/8	**Other**	**0.67**	7/16	3/4	1	1 5/8	2 3/16
3/8	5/8	15/16	1 1/2	2 1/8	**Other**	**0.68**	7/16	3/4	1	1 5/8	2 3/16
3/8	5/8	15/16	1 1/2	2 1/16	**Other**	**0.69**	7/16	11/16	1	1 5/8	2 3/16
3/8	5/8	15/16	1 7/16	2 1/16	**Other**	**0.70**	7/16	11/16	1	1 5/8	2 1/8
3/8	5/8	15/16	1 7/16	2 1/16	**Other**	**0.71**	7/16	11/16	1	1 9/16	2 1/8
3/8	5/8	7/8	1 7/16	2 1/16	**Other**	**0.72**	7/16	11/16	1	1 9/16	2 1/8
3/8	5/8	7/8	1 7/16	2 1/16	**Other**	**0.73**	7/16	11/16	15/16	1 9/16	2 1/8
3/8	5/8	7/8	1 7/16	2	**Other**	**0.74**	7/16	11/16	15/16	1 9/16	2 1/16
3/8	5/8	7/8	1 7/16	2	**Other**	**0.75**	7/16	11/16	15/16	1 9/16	2 1/16
3/8	5/8	7/8	1 3/8	2	**Other**	**0.76**	7/16	11/16	15/16	1 1/2	2 1/16
3/8	5/8	7/8	1 3/8	2	**Other**	**0.77**	7/16	11/16	15/16	1 1/2	2 1/16
3/8	5/8	7/8	1 3/8	1 15/16	**Other**	**0.78**	7/16	11/16	15/16	1 1/2	2
3/8	5/8	7/8	1 3/8	1 15/16	**Other**	**0.79**	7/16	11/16	15/16	1 1/2	2
3/8	5/8	7/8	1 3/8	1 15/16	**Other**	**0.80**	7/16	11/16	15/16	1 1/2	2
3/8	5/8	7/8	1 3/8	1 15/16	**Other**	**0.81**	7/16	11/16	15/16	1 1/2	2
5/16	9/16	13/16	1 5/16	1 7/8	**Other**	**0.82**	3/8	5/8	7/8	1 7/16	1 15/16
5/16	9/16	13/16	1 5/16	1 7/8	**Other**	**0.83**	3/8	5/8	7/8	1 7/16	1 15/16
5/16	9/16	13/16	1 5/16	1 7/8	**Other**	**0.84**	3/8	5/8	7/8	1 7/16	1 15/16
5/16	9/16	13/16	1 5/16	1 7/8	**Other**	**0.85**	3/8	5/8	7/8	1 7/16	1 15/16
5/16	9/16	13/16	1 5/16	1 7/8	**Other**	**0.86**	3/8	5/8	7/8	1 7/16	1 15/16
5/16	9/16	13/16	1 5/16	1 13/16	**Other**	**0.87**	3/8	5/8	7/8	1 7/16	1 7/8

L4x4x5/16 w/d .692

UL Product iQ®

BXUV.Y710 - Fire-resistance Ratings - ANSI/UL 263

Design/System/Construction/Assembly Usage Disclaimer

- Authorities Having Jurisdiction should be consulted in all cases as to the particular requirements covering the installation and use of UL Certified products, equipment, system, devices, and materials.
- Authorities Having Jurisdiction should be consulted before construction.
- Fire resistance assemblies and products are developed by the design submitter and have been investigated by UL for compliance with applicable requirements. The published information cannot always address every construction nuance encountered in the field.
- When field issues arise, it is recommended the first contact for assistance be the technical service staff provided by the product manufacturer noted for the design. Users of fire resistance assemblies are advised to consult the general Guide Information for each product category and each group of assemblies. The Guide Information includes specifics concerning alternate materials and alternate methods of construction.
- Only products which bear UL's Mark are considered Certified.

BXUV - Fire Resistance Ratings - ANSI/UL 263 Certified for United States

BXUV7 - Fire Resistance Ratings - CAN/ULC-S101 Certified for Canada

See General Information for Fire-resistance Ratings - ANSI/UL 263 Certified for United States
Design Criteria and Allowable Variances

See General Information for Fire Resistance Ratings - CAN/ULC-S101 Certified for Canada
Design Criteria and Allowable Variances

Design No. Y710

February 05, 2014

Ratings — 1, 1-1/2, 2, 3 and 4 Hr

* Indicates such products shall bear the UL or cUL Certification Mark for jurisdictions employing the UL or cUL Certification (such as Canada), respectively.

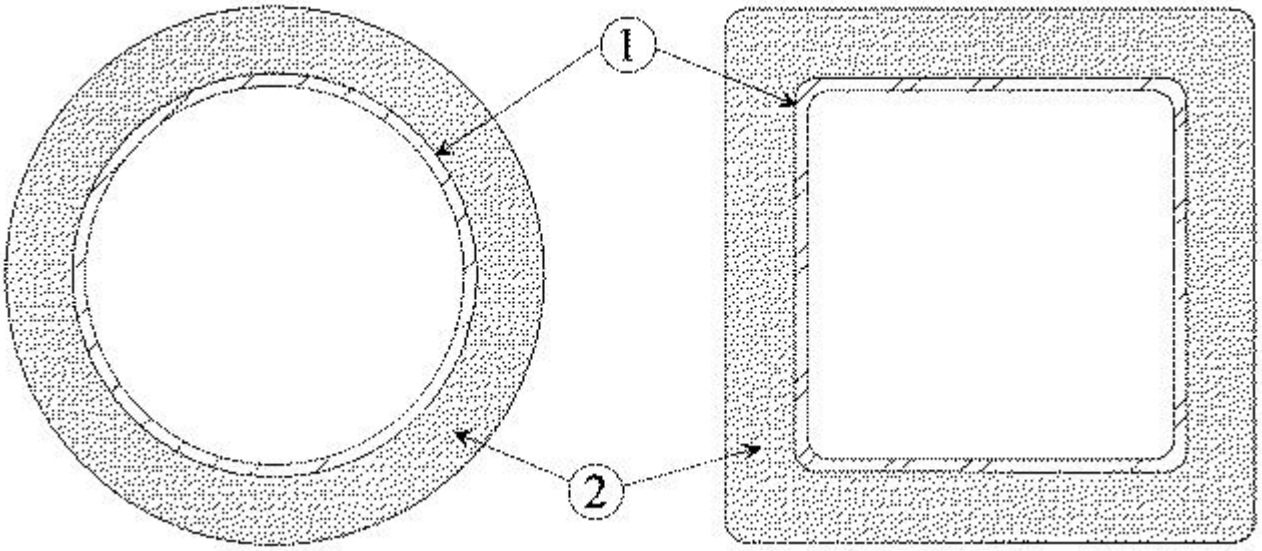

1. **Steel Pipe or Tube Column —** Steel circular pipe (SP) or steel square or rectangular tube (ST). The A/P ratio of the steel pipe or tube (see Item 2) shall range from 0.18 to 2.0.

2. **Spray-Applied Fire Resistive Materials* —** Prepared by mixing with water according to instructions and applying in one or more coats to the thicknesses shown below, to steel surfaces which are clean and free of dirt, loose scale, and oil. Min avg and min ind density for Types MK-6/CBF, MK-6/ED, MK-6/HY, MK-6/HB, MK-6s, MK-6 GF, MK-6 GF Extended Set, MK-10 HB, MK-10 HB Extended Set, MK-1000/HB, MK-1000/HB Extended Set and RG of 15/14 pcf, respectively. Min avg and min ind density for Types Z-106, Z-106/G, Z-106/HY of 22/19 pcf, respectively.

Column Size In.	A/P	Min Thkns In. 1 Hr	1-1/2 Hr	2 Hr	3 Hr	4 Hr
ST 3x3x3/16	.18	1	1-11/16	2-5/16	3-9/16	NA
ST 3x3x5/16	.28	11/16	1-1/8	1-1/2	2-5/16	3-1/16
ST 3x3x1/2	.42	7/16	3/4	1	1-1/2	2-1/16
ST 8x8x5/8	.58	3/8	5/8	3/4	1-1/8	1-1/2
ST 20x20x3/4	.72	1/4	3/8	9/16	7/8	1-3/16
ST 20x20x1	.95	1/4	5/16	7/16	11/16	15/16
ST 32x32x1-1/4	1.20	1/4	1/4	3/8	9/16	3/4
ST 32x32x1-1/2	1.43	1/4	1/4	5/16	1/2	5/8
ST 32x32x1-3/4	1.65	1/4	1/4	1/4	7/16	9/16
ST 32x32x2	1.88	1/4	1/4	1/4	3/8	1/2
SP 3x.216	.20	15/16	1-1/2	2-1/16	3-1/8	NA
SP 8x.322	.31	5/8	1	1-5/16	2-1/16	2-13/16
SP 6x.432	.40	1/2	3/4	1	1-9/16	2-1/8
SP 10x.50	.48	3/8	5/8	7/8	1-3/8	1-13/16
SP 6x.864	.74	1/4	3/8	9/16	7/8	1-3/16

The hourly rating of the structural member is dependent upon the ratio of A/P and the thickness of Spray-Applied Fire Resistive Materials, where A is the cross sectional area of the pipe or tube and P is the heated perimeter.

The A/P ratio of a circular pipe is determined by:

$$A/P\ pipe = \frac{t\,(d-t)}{d}$$

Where:

d = the outer diam of the pipe (in.)

t = the wall thickness of the pipe (in.)

The A/P ratio of a rectangular or square tube is determined by:

$$A/P\ tube = \frac{t\,(a+b-2t)}{a+b}$$

Where:

a = the outer width of the tube (in.)

b = the outer length of the tube (in.)

t = the wall thickness of the tube (in.)

The thickness of Spray-Applied Fire Resistive Materials for rating of 3/4, 1, 1-1/2, 2, 3 and 4 h of a steel pipe or tube can be determined by the equation:

$$h = \frac{R-0.20}{4.43\,(A/P)}$$

Where:

R = the hourly rating (hrs)

h = the thickness of Spray-Applied Fire Resistive Materials, minimum 1/4 in., maximum 3-7/8 in.

ARABIAN VERMICULITE INDUSTRIES — Type MK-6GF, MK-6 GF Extended Set, MK-10 HB, MK-10 HB Extended Set, MK-1000/HB, MK-1000/HB Extended Set.

GCP KOREA INC — Types MK-6/CBF, MK-6/ED, MK-6/HY, MK-10 HB, MK-10 HB Extended Set, MK-6/HB, MK-6s, MK-6GF, MK-6 GF Extended Set, MK-1000/HB, MK-1000/HB Extended Set, Monokote Acoustic 1, Monokote Acoustic 5, Z-106, Z-106/G, Z-106/HY.

GCP APPLIED TECHNOLOGIES INC — Types MK-4, MK-5, MK-6/HY, MK-10 HB, MK-10 HB Extended Set, MK-6/HB, MK-6s, MK-6 GF, MK-6 GF Extended Set, MK-1000/HB, MK-1000/HB Extended Set, Monokote Acoustic 1, Monokote Acoustic 5, RG, Z-106, Z-106/G, Z-106/HY.

* Indicates such products shall bear the UL or cUL Certification Mark for jurisdictions employing the UL or cUL Certification (such as Canada), respectively.

Last Updated on 2014-02-05

The appearance of a company's name or product in this database does not in itself assure that products so identified have been manufactured under UL Solutions' Follow - Up Service. Only those products bearing the UL Mark should be considered to be Certified and covered under UL Solutions' Follow - Up Service. Always look for the Mark on the product.

UL Solutions permits the reproduction of the material contained in Product iQ subject to the following conditions: 1. The Guide Information, Assemblies, Constructions, Designs, Systems, and/or Certifications (files) must be presented in their entirety and in a non-misleading manner, without any manipulation of the data (or drawings). 2. The statement "Reprinted from Product iQ with permission from UL Solutions" must appear adjacent to the extracted material. In addition, the reprinted material must include a copyright notice in the following format: "©2023 UL LLC."

BXUV.Y710

Rectangular Tube Columns

GCP Applied Technologies Inc. — Types MK-6/HY, MK-10 HB, MK-6s, MK-6 GF, MK-6 GF Extended Set, RG, Z-106, Z-106/G, Z-106/HY, MK-1000/HB, MK-1000/HB Extended Set

Nominal Size	Wall Thickness	A/P (a)	1 hr	1.5 hr	2 hr	3 hr	4 hr
4 x 3	3/16	0.177	1	1 11/16	2 5/16	3 9/16	NR
4 x 3	1/4	0.232	13/16	1 5/16	1 13/16	2 3/4	3 3/4
5 x 3	3/16	0.179	1	1 11/16	2 5/16	3 9/16	NR
5 x 3	1/4	0.234	13/16	1 5/16	1 3/4	2 3/4	3 11/16
5 x 3	5/16	0.288	11/16	1 1/16	1 7/16	2 1/4	3
5 x 3	3/8	0.340	9/16	7/8	1 1/4	1 7/8	2 9/16
5 x 3	1/2	0.438	7/16	11/16	15/16	1 1/2	2
5 x 4	3/16	0.180	1	1 11/16	2 5/16	3 9/16	NR
5 x 4	1/4	0.236	13/16	1 1/4	1 3/4	2 11/16	3 11/16
5 x 4	5/16	0.291	5/8	1 1/16	1 7/16	2 3/16	3
5 x 4	3/8	0.344	9/16	7/8	1 3/16	1 7/8	2 1/2
6 x 3	3/16	0.180	1	1 11/16	2 5/16	3 9/16	NR
6 x 3	1/4	0.236	13/16	1 1/4	1 3/4	2 11/16	3 11/16
6 x 3	5/16	0.291	5/8	1 1/16	1 7/16	2 3/16	3
6 x 3	3/8	0.344	9/16	7/8	1 3/16	1 7/8	2 1/2
6 x 3	1/2	0.444	7/16	11/16	15/16	1 7/16	1 15/16
6 x 4	3/16	0.180	1	1 11/16	2 5/16	3 9/16	NR
6 x 4	1/4	0.238	13/16	1 1/4	1 3/4	2 11/16	3 5/8
6 x 4	5/16	0.293	5/8	1 1/16	1 7/16	2 3/16	2 15/16
6 x 4	3/8	0.347	9/16	7/8	1 3/16	1 7/8	2 1/2
6 x 4	1/2	0.450	7/16	11/16	15/16	1 7/16	1 15/16
7 x 5	3/16	0.182	1	1 5/8	2 1/4	3 1/2	NR
7 x 5	1/4	0.240	13/16	1 1/4	1 3/4	2 11/16	3 5/8
7 x 5	5/16	0.296	5/8	1	1 3/8	2 3/16	2 15/16
7 x 5	3/8	0.352	9/16	7/8	1 3/16	1 13/16	2 7/16
7 x 5	1/2	0.458	7/16	11/16	15/16	1 7/16	1 7/8
8 x 3	3/16	0.181	1	1 5/8	2 1/4	3 1/2	NR
8 x 3	1/4	0.239	13/16	1 1/4	1 3/4	2 11/16	3 5/8
8 x 3	5/16	0.295	5/8	1	1 7/16	2 3/16	2 15/16
8 x 3	3/8	0.349	9/16	7/8	1 3/16	1 13/16	2 1/2
8 x 4	3/16	0.182	1	1 5/8	2 1/4	3 1/2	NR
8 x 4	1/4	0.240	13/16	1 1/4	1 3/4	2 11/16	3 5/8
8 x 4	5/16	0.296	5/8	1	1 3/8	2 3/16	2 15/16
8 x 4	3/8	0.352	9/16	7/8	1 3/16	1 13/16	2 7/16
8 x 4	1/2	0.458	7/16	11/16	15/16	1 7/16	1 7/8
8 x 6	3/16	0.182	1	1 5/8	2 1/4	3 1/2	NR
8 x 6	1/4	0.241	3/4	1 1/4	1 11/16	2 5/8	3 9/16
8 x 6	5/16	0.299	5/8	1	1 3/8	2 1/8	2 7/8
8 x 6	3/8	0.355	9/16	7/8	1 3/16	1 13/16	2 7/16
8 x 6	1/2	0.464	7/16	11/16	15/16	1 3/8	1 7/8
10 x 4	3/16	0.182	1	1 5/8	2 1/4	3 1/2	NR
10 x 4	1/4	0.241	3/4	1 1/4	1 11/16	2 5/8	3 9/16
10 x 4	5/16	0.299	5/8	1	1 3/8	2 1/8	2 7/8
10 x 4	3/8	0.355	9/16	7/8	1 3/16	1 13/16	2 7/16
10 x 4	1/2	0.464	7/16	11/16	15/16	1 3/8	1 7/8
10 x 6	3/16	0.183	1	1 5/8	2 1/4	3 1/2	NR
10 x 6	1/4	0.242	3/4	1 1/4	1 11/16	2 5/8	3 9/16
10 x 6	5/16	0.300	5/8	1	1 3/8	2 1/8	2 7/8
10 x 6	3/8	0.357	9/16	7/8	1 3/16	1 13/16	2 7/16
10 x 6	1/2	0.469	7/16	11/16	7/8	1 3/8	1 7/8

62 Whittemore Avenue
Cambridge, Massachusetts 02140

gcpat.com

Brian Sykes
Fire Protection Representative
WA, OR, ID, MT, WY, AK, Yukon Territory, British Columbia, Alberta
206-799.9258 Mobile
Brian.Sykes@gcpat.com

3/9/2022

John Beebe
Fireproofing Department Estimator
WPI (Western Partitions Inc)
26055 SW Canyon Creek Road
Wilsonville, OR 97070

RE: Approved Applicator

To whom it may concern:

This letter is to verify that WPI. has been through all applicable and appropriate training in GCP Applied Technologies Monokote® fireproofing products. They are qualified to install all fire protection systems manufactured by GCP Applied Technologies in accordance with GCP's published instructions.

We trust that this information meets your needs. Please feel free to reach out to me should you require additional information.

Sincerely,
Brian Sykes

Senior Sales Representative
Fire Protection Products
GCP Applied Technologies

The information contained in this letter is provided for the convenience of the recipients and while efforts have been taken to be as accurate and update possible, GCP Applied Technologies' will not be held responsible for errors or inaccuracies. The information supplied must be reviewed in light of the project requirements and all conditions within the specific UL Designs. In case of discrepancy, the user of the information must comply with the guidelines as outlined in Underwriters Laboratories Fire Resistance Directory.