18S Rooftop Equipment 2019.09.27

Model	Location	QTY	Height	Length	Width	Tag
Rooftop Units						
	RTU-1,2	2	57"	138"	101"	A
	RTU-3	1	41"	88"	60"	B
	HP-1	1	65"	140"	30"	C
	CU-1,2 (mounted with HP-1)		38"	37"	15"	D
	Total Count on Roof	**4**				
Exhaust Hoods						
	RH-2	1	16"	48"	40"	E
	RH-3,4	2	24"	99"	75"	F
	Total Count on Roof	**3**				
		7	**Subtotal**			
Exhaust Fans						
Cook TDB-15	EF-1	N/A	Courtyard			
Cook 120C17D	EF-2	1	27"	28.25"	28.25"	G1
Cook 120C13D	EF-15A	1	27"	28.25"	28.25"	G2
Cook 90C17DEC	EF-3,4,8,9	12	17"	18.75"	18.75"	
Cook 101C28D	EF-5A,6A,7A,10A,11A,12A,13A,14A,16A,17A,19A,20A,	13	21"	23.25"	23.25"	H
Cook 100C17DEC	EF-5B,5C,6B,6C,7B,7C,10B,10C,11B,11C,12B,12C,13B,13C, 14B,14C,15B,15C,16B,16C,17B,17C,19B,19C,20B,20C	26	17"	18.75"	18.75"	
Broan L250	EF-18	N/A	Through-wall			
Panasonic FV-05-11VKS1	EF-21,23,25,26,CEF-1	N/A	Through-wall			
Broan L900	EF-22	N/A	Through-wall			
Broan L400	EF-24	N/A	Through-wall			
DELAT BREEZ SLM50	TF-1,2,3	N/A	Through-wall			
Cook 165SQN17D	SF-1	N/A	Through-wall			
FANTECH FKD18	SF-2	N/A	Through-wall			
Cook 90QMX	SPF-1A	N/A	Through-wall			
Cook 225QMX	SPF-1,2	2	55"	41"	27"	I
	Total Count on Roof	**17**				
Retail Units - Future						
Carrier	Condensing Units	11	44.5"	43.125"	17"	J
Captive Aire	Dishwasher Fan	1	27.125"	22.5"	29.5"	K
Captive Aire	Grease Fan	1	80"	46.5"	49.25"	L
	Total Count on Roof	**13**				
		30	**Subtotal**			
		37	**Total**			

Approved Under Current Review
Proposed - Type II Application

COOK

TYPICAL ROOF CURB

PROJECT: 18TH & SALMON
DATE: 8/24/2018

RCG

Galvanized Steel Roof Curb

STANDARD CONSTRUCTION FEATURES:

18 gauge galvanized steel - 1-1/2", 3 lbs. density thermal and acoustical insulation - Continuously welded corners - Wood nailer.

Options:(As noted below*)

1) **No wood nailer (deduct 1-1/2" for actual height).**
2) **Damper tray.**

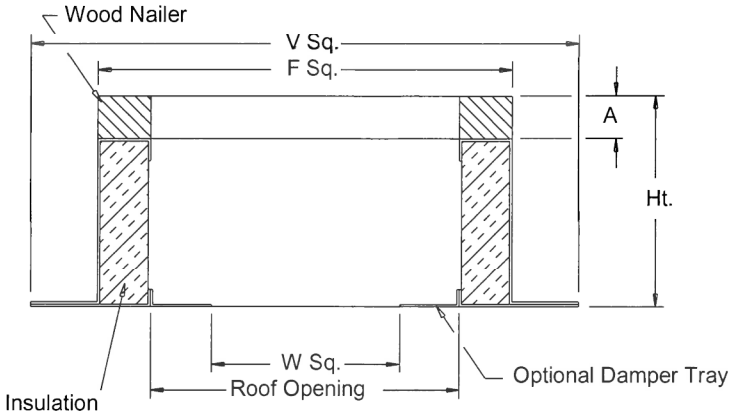

Dimensions (inches)

Mark	Qty	Description	Ht	Options*	A	F Sq.	V Sq.	W Sq.	Roof Opening
EF-KITCHEN#1	1	RCG 16	13.5	2;	1-1/2	16-1/2	20-1/2	9-3/4	13-1/2

COOK

MARK: EF-TRASH
PROJECT: 18TH & SALMON
DATE: 8/24/2018

120C17D
SEE ITEM
G1
ON ROOF PLAN

ACE-D VF

Downblast Centrifugal
Exhaust Ventilator
Roof Mounted/Direct Drive
Electronically Commutated Vari-Flow® Motor

STANDARD CONSTRUCTION FEATURES:
All aluminum housing - Backward inclined all aluminum wheel - Two piece top cap with stainless steel quick release latches (sizes 120 - 300) - Welded curb cap corners - Birdscreen - Permanently lubricated ball bearing motors - Corrosion resistant fasteners - Transit tested packaging.

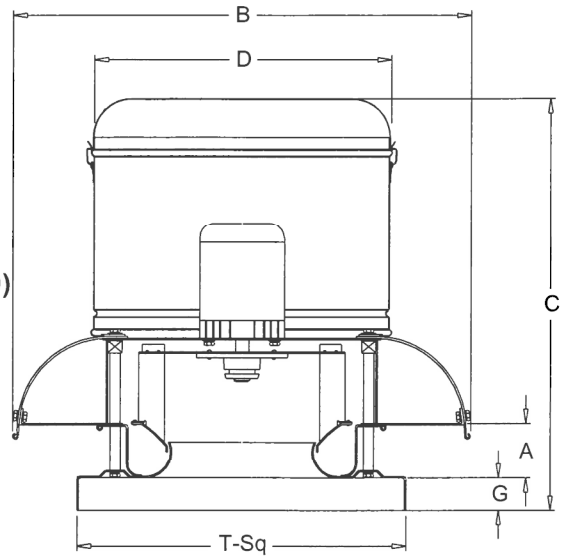

Performance

Qty	Catalog Number	Flow (CFM)	SP (inwc)	Fan RPM	Power (HP)	FEG	Speed Control
1	120C17D (VF)	975	.625	1311	.161	n/a(<1HP)	EC

Altitude (ft): 39 Temperature (F): 70

Motor Information

HP	RPM*	Volts/Ph/Hz	Enclosure	RLA
1/4	1725	115/1/60	OPEN -EC	3.51

Vari-Flow

*Motor programmed to max speed of 1494 RPM.
RLA based on motor manufacturer's data at programmed HP and max RPM.
Motor is electronically protected.

Sound Data Inlet Sound Power by Octave Band

1	2	3	4	5	6	7	8	LwA	dBA	Sones
68	70	74	65	61	59	53	49	69	57	8.6

Accessories:
FAN MOUNTED SPEED CONTROL
DISCONNECT NEMA 1
ROOF CURB RCG 18-13.5H W/TRAY

Dimensions (inches)

A	1-7/16
B O.D.	28-7/16
C	27-1/16
D O.D.	20-3/8
G	2
T Sq.	20
Roof Open. Sq.*	15-1/2

NOTE: Accessories may affect dimensions shown.

Weight(lbs)***	Shipping	75	Unit	59

* Roof opening size for curbs supplied by Cook only.
***Includes fan, motor & accessories.

Fan Curve

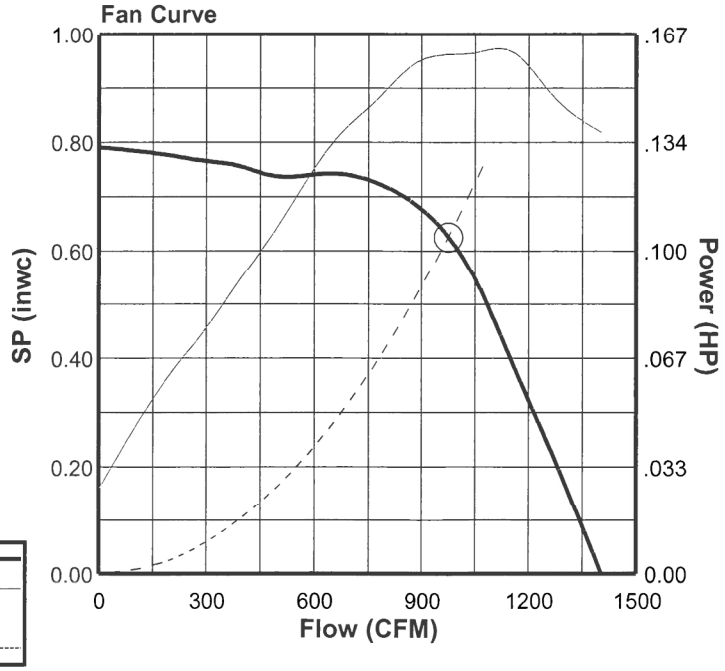

Fan Curve Legend

CFM vs SP	———
CFM vs HP	———
Point of Operation	○
System Curve	- - - - -

INTRODUCTION

Cook power roof and wall ventilators provide maximum performance and durability in a wide variety of commercial and industrial air moving applications. Exhaust applications include general ventilation, fume-hood, paint booth and smoke control systems.

- AC unit top cap assembly is designed to provide weather protection for the motor and drive components while maintaining easy, tool free access for inspection and maintenance.
- Standard lifting lugs, located under the top cap, provide for safe, fast and efficient lifting of the unit to a rooftop.
- One piece fan base, which includes a high-efficiency inlet venturi and continuously welded curb cap corners, insures weathertight conditions.
- Spun aluminum baffle is designed to provide smooth, turbulent-free airflow.
- Wheels are centrifugal type featuring non-overloading, backward-inclined blades and a tapered inlet shroud.
- Accurate performance is assured through compliance with the AMCA Certified Ratings Program. All units are licensed to bear the AMCA Certified Ratings Seal for Air and Sound Performance.

ACE

Downblast Centrifugal Exhaust Ventilator

- Typically used in roof mounted clean-air exhaust applications.
- ACE available in 8 direct drive sizes and 21 belt drive sizes. Capacities range from 100 to 32,300 CFM, with static pressures from 0 to 1-1/2 inches.

120C13D
SEE ITEM
G2
ON ROOF PLAN

Model Number Chart

Direct Drive Models

100 C 15 D H

Fan Size
70 through 180

Model
C - ACED
R - ACRUD
RH - ACRUD-HP
RX - ACRUD-XP
W - ACWD
WH - ACWD-HP
WX - ACWD-XP

Wheel Type (70-100 Only)
H - High Flow
M - Medium Flow
L - Low Flow

Direct Drive

Motor RPM
10=1075
11=1140
13=1300
15=1550
17=1725

Belt Drive Models

150 C 4 B

Fan Size
60 through 540

Model
C - ACEB
R - ACRUB
RH - ACRUB-HP
RX - ACRUB-XP
W - ACWB
WH - ACWB-HP
WX - ACWB-XP
SC - ACSC
SCH - ACSC-HP
SCX - ACSC-XP

Motor HP
2=1/6
3=1/4
4=1/3
5=1/2
6=3/4
7=1
8=1-1/2
9=2
10=3
11=5
12=7-1/2
13=10

Belt Drive

CONTINUED ON FOLLOWING SHEET

Downblast Centrifugal Exhaust Ventilator Roof Mounted Direct Drive

Loren Cook Company certifies that the ACED shown herein is licensed to bear the AMCA Seal. The ratings shown are based on tests and procedures performed in accordance with AMCA Publication 211 and AMCA Publication 311 and comply with the requirements of the AMCA Certified Ratings Program.

Type ACED is furnished standard with UL 705 and cUL 705 listings (Power Ventilator/ ZACT).

Sizes 70 - 100

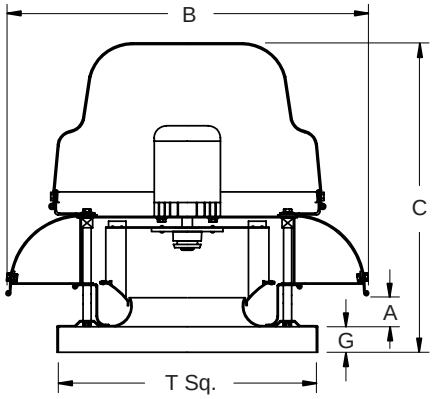

Sizes 120 - 180

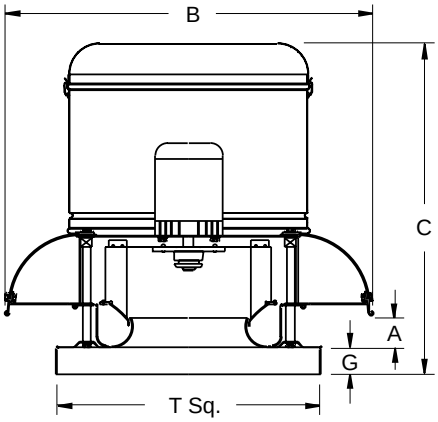

Description - Fan shall be a spun aluminum, roof mounted, direct driven, downblast centrifugal exhaust ventilator.

Certifications - Fan shall be manufactured at an ISO 9001 certified facility. Fan shall be listed by Underwriters Laboratories (UL 705) and UL listed for Canada (cUL 705). Fan shall bear the AMCA Certified Ratings Seal for Sound and Air Performance.

Construction - Fan shall be of bolted and welded construction utilizing corrosion resistant fasteners. The spun aluminum structural components shall be constructed of minimum 16 gauge marine alloy aluminum, bolted to a rigid aluminum support structure. The aluminum base shall have continuously welded curb cap corners for maximum leak protection. The discharge baffle shall have a rolled bead for added strength. An integral conduit chase shall be provided through the curb cap and into the motor compartment to facilitate wiring connections. The motor shall be enclosed in a weather-tight compartment, separated from the exhaust airstream. Unit shall bear an engraved aluminum nameplate. Nameplate shall indicate design CFM and static pressure. Unit shall be shipped in ISTA Certified Transit Tested Packaging.

Wheel - Wheel shall be centrifugal backward inclined, constructed of 100 percent aluminum, including a precision machined cast aluminum hub. An aerodynamic aluminum inlet cone shall be provided for maximum performance and efficiency. Wheel shall be balanced in accordance with AMCA Standard 204-96, Balance Quality and Vibration Levels for Fans.

Motor - Motor shall be heavy duty type with permanently lubricated sealed bearings and furnished at the specified voltage, phase and enclosure.

Product - Fan shall be model ACED as manufactured by Loren Cook Company of Springfield, Missouri.

ACED Dimension Data

Size	A	B	C	G	T Sq.	Roof Opening Square*	Ship. Wt.
70	1-3/4	13-5/8	13-13/16	2	18	13-1/2	20
90	2-1/2	18-3/4	16-13/16	2	18	13-1/2	28
100	2-1/2	18-3/4	16-13/16	2	18	13-1/2	30
120	1-7/16	28-7/16	26-9/16	2	20	15-1/2	67
135	1-15/16	28-7/16	27-1/16	2	20	15-1/2	72
150	2-13/16	32-7/8	28-11/16	2	24	19-1/2	87
165	3-5/16	32-7/8	29-3/16	2	24	19-1/2	90
180	3-5/16	37-11/16	33-15/16	3	30	25-1/2	102

All dimensions in inches. *Roof opening size for curbs supplied by Loren Cook Company only. Weights in pounds.

120C13D
SEE ITEM
G2
ON ROOF PLAN

COOK

MARK: EF-DRYER#1
PROJECT: 18TH & SALMON
DATE: 8/24/2018

101C28D
SEE ITEM
H
ON ROOF PLAN

ACE-D VF

Downblast Centrifugal Exhaust Ventilator Roof Mounted/Direct Drive Electronically Commutated Vari-Flow® Motor

STANDARD CONSTRUCTION FEATURES:

All aluminum housing - Backward inclined all aluminum wheel - Two piece top cap with stainless steel quick release latches (sizes 120 - 300) - Welded curb cap corners - Birdscreen - Permanently lubricated ball bearing motors - Corrosion resistant fasteners - Transit tested packaging.

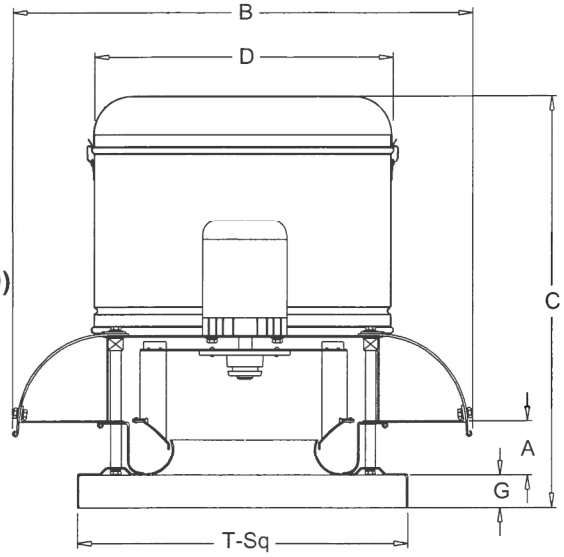

Performance

Qty	Catalog Number	Flow (CFM)	SP (inwc)	Fan RPM	Power (HP)	FEG	Speed Control
1	101C28D (VF)	740	.625	1752	.157	n/a(<1HP)	EC

Altitude (ft): 39 Temperature (F): 70

Motor Information

HP	RPM*	Volts/Ph/Hz	Enclosure
1/3	2800	115/1/60	OPEN -EC

Vari-Flow

*Motor programmed to max speed of 2217 RPM.

Sound Data Inlet Sound Power by Octave Band

1	2	3	4	5	6	7	8	LwA	dBA	Sones
72	73	76	72	65	62	56	52	73	61	10.7

Accessories:

FAN MOUNTED SPEED CONTROL
DISCONNECT NEMA 1
ROOF CURB RCG 16-13.5H W/TRAY

Dimensions (inches)

A	2-3/8
B O.D.	23-9/16
C	21-1/8
D O.D.	16-3/4
G	2
T Sq.	18
Roof Open. Sq.*	13-1/2

NOTE: Accessories may affect dimensions shown.

Weight(lbs)***	Shipping	69	Unit	61

* Roof opening size for curbs supplied by Cook only.
***Includes fan, motor & accessories.

Fan Curve

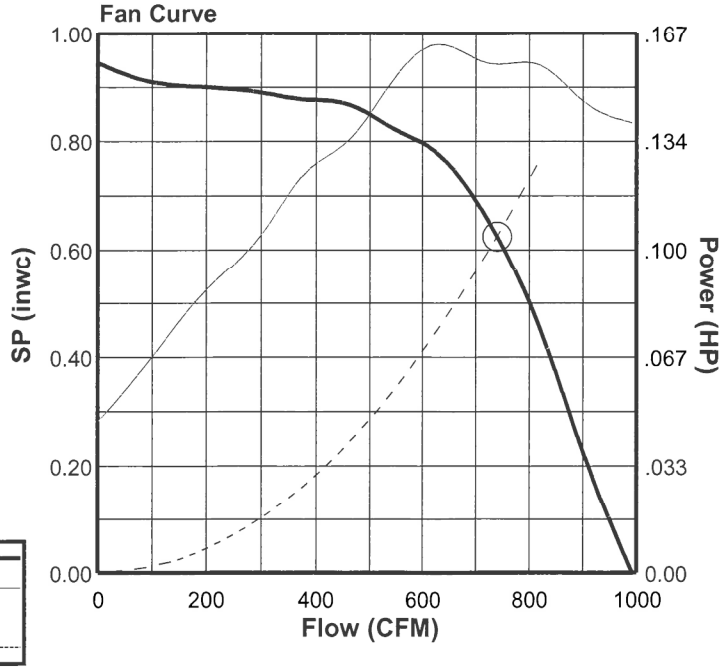

Fan Curve Legend

CFM vs SP	———
CFM vs HP	———
Point of Operation	○
System Curve	- - - - -

COOK

SEISMICALLY QUALIFIED

MARK: SPF	
PROJECT: 18TH AND SALMON SMOKE CONTROL	
DATE: 7/8/2019	

QMX

Mixed Flow Inline
Horizontal Mount
Belt Drive
Arrangement 9
Level 2

225QMX
SEE ITEM
1
ON ROOF PLAN

STANDARD CONSTRUCTION FEATURES:
High efficiency mixed flow wheel - Continuously welded steel housing with Lorenized powder coating - Welded aerodynamic straightening vanes - Integral inlet and outlet collars for slip fit duct connections - Adjustable motor plate utilizing threaded studs for positive belt tensioning - L10/40K Concentric locking regreasable bearings with extended lube lines - Belt guard - Lifting lugs - Adjustable mounting feet.

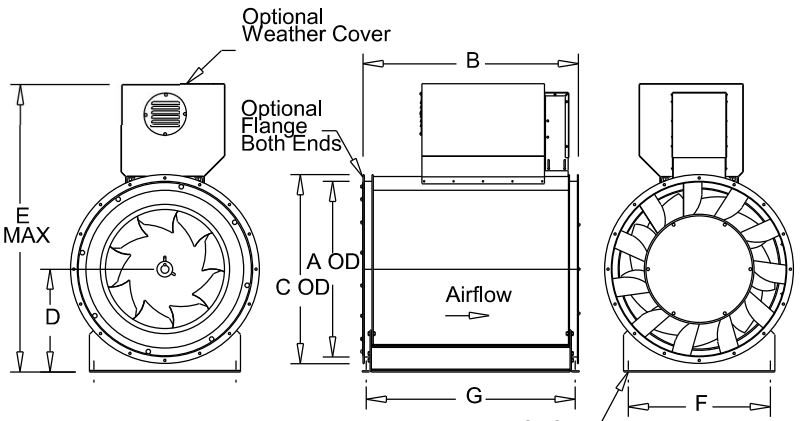

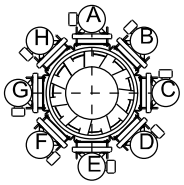

MOTOR POSITION CHART
(View Facing Outlet)
Mounting positions are field adjustable.

Performance (*Bhp includes 5% drive loss)

Qty	Catalog Number	Flow (CFM)	SP (inwc)	Fan RPM	Power* (HP)	FEG	FEI
2	225QMX	12500	1.00	1470	4.61	80	1.12

Altitude (ft): 39 Temperature (F): 70

Motor Information

HP	RPM	Volts/Ph/Hz	Enclosure	FLA	Position	Mounted
5	1725	460/3/60	ODP -PE	7.6	A	Yes

NEMA Premium® efficiency motor per MG-1 (2014) Table 12-12
FLA based on NEC (2014) Table 430.250

Dimensions (inches)

A	31-15/16
B	41
C	34-15/16
D	19
E	55-13/16
F	26-15/16
G	39-5/8
H	9/16

NOTE: Accessories may affect dimensions shown.

Weight(lbs)***	Shipping	1033	Unit	812

***Includes fan, motor & accessories.

Fan Information

Level	OVel(fpm)	Fan Mount	Access
2	2275	Horz. Floor	C

Sound Data Sound Power by Octave Band

	1	2	3	4	5	6	7	8	LwA	dBA
Inlet	82	84	83	83	81	79	77	73	86	75
Outlet	85	85	88	88	84	79	77	74	89	78

Accessories:

Premium Efficiency Motor (Min. 89.5%) w/SGR
DRIVES (LS SF) @ 1470 RPM
DISCONNECT NEMA 3 PRE-WIRED L-T
UL SMOKE CONTROL
SEISMIC CERT/OSHPD
ACCESS DOOR-HINGED@C
DRAIN
FLANGED OUTLET-STL
INLT SFTY SCRN STL
MOTOR COVER - HORZ
HEAT SHIELD
ENCLOSED BELT TUNNEL
SPARE BELT SET
INLT PIEZOMETRIC RNG
COPPER LUBELINE UPGR
COOK FLOW MONITOR
SRS-450 SET(4) - ISOLATORS

Fan Curve Legend

CFM vs SP (1470)	
MaxRPM(1937)	
MinRPM(481)	
CFM vs HP	
Point of Operation	○
System Curve	

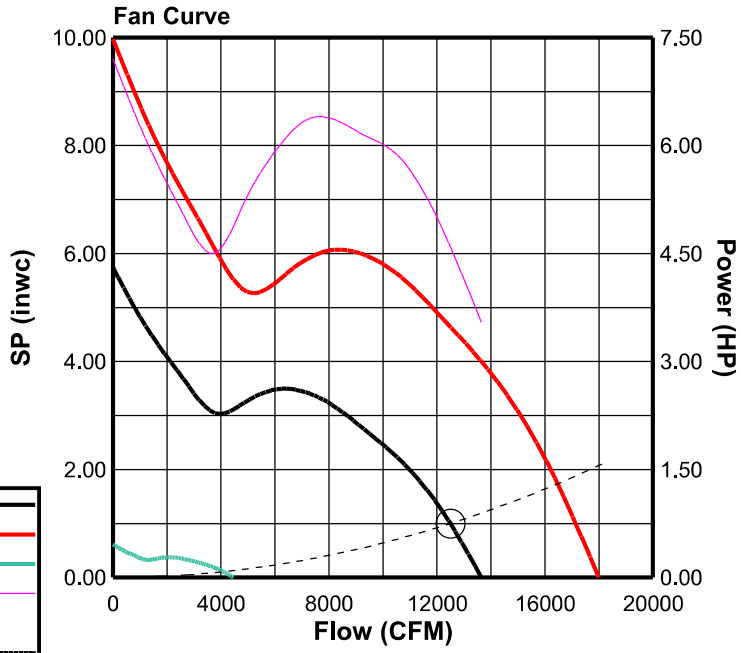

Unit Report For 4T HP

Project: 18S Split HPS
Prepared By:
09/18/2019

CONDENSING UNITS
SEE ITEM
J
ON ROOF PLAN

Outdoor Unit Parameters

Unit Model: **25HHA**
Unit Size: **4 Tons (Size 48)**
Voltage: **208/230-3-60** V-Ph-Hz

Indoor Coil Parameters

Unit Model: **FX4D**
Unit Size: **60,000 Btuh (Size 061)**
Cabinet Insulation: **Modular with 1-in. super thick insulation**
Voltage: **230-1-60** V-Ph-Hz
Refrigerant Type: **Puron**
Heating Size: **No Heat**

Outdoor Unit Dimensions and Weight

Unit Length: **43.125** in
Unit Width: **17.0625** in
Unit Height: **44.5** in
Unit Shipping Weight: **276.** lb

Indoor Coil Dimensions and Weight

Unit Length: **22.0625** in
Unit Width: **24.6875** in
Unit Height: **59.1875** in
Unit Shipping Weight: **201.** lb

RESIDENTIAL APPLICATIONS

This warranty is to the original purchasing owner and subsequent owners only to the extent and as stated in the Warranty Conditions and below. The limited warranty period in years, depending on the part and the claimant, is as shown in the table below.

Limited Warranty (Years)		
Item	**Original Owner**	**Subsequent Owner**
Parts	10* (or 5)	5
Compressor	10* (or 5)	5

***If properly registered within 90 days of original installation, otherwise 5 years (except in California and Quebec and other jurisdictions that prohibit warranty benefits conditioned on registration). See Warranty Conditions below.**

OTHER APPLICATIONS

The warranty period is five (5) years on the compressor, and one (1) year on all other parts. The warranty is the original owner only and is not available for subsequent owners.

Ordering Information

Part Number	Description	Quantity
Outdoor Unit		
25HHA448A005	Performance Series Heat Pump with Puron 4 Tons Cooling	1
	14 SEER @ ARI Conditions	
Accessories		
KAACH1601AAA	Crankcase Heater for Outdoor Unit	1
Indoor Coil		
FX4DNB061L00	FX4D Comfort Series Fan Coil with Puron 60000 BTU Cooling 208/230-1-60	1
	Modular with 1-in. super thick insulation	
	Aluminum	
Accessories		

FAN#2 (MUA-1) - HEATER PERFORMANCE CURVES.

3100 CFM, 0.831 SP @ 1347 RPM and 1.398 BHP at 154 feet and 65 deg F

* Please note that these curves were adjusted for job specific temperature and altitude.

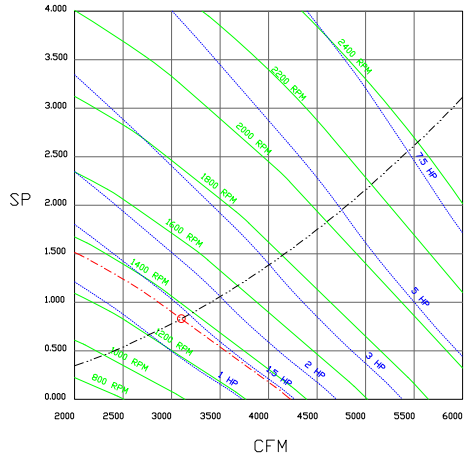

FAN#3 (TYPE II EXHAUST) - EXHAUST PERFORMANCE CURVES.

800 CFM, 2.164 SP @ 2168 RPM and 0.632 BHP at 154 feet and 120 deg F

* Please note that these curves were adjusted for job specific temperature and altitude.

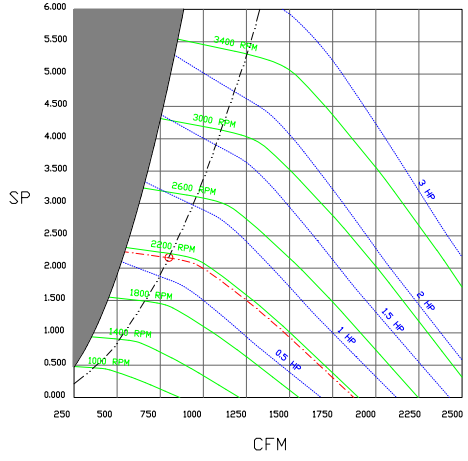

FAN #3 USBIUDD-RM - EXHAUST FAN (TYPE II EXHAUST)

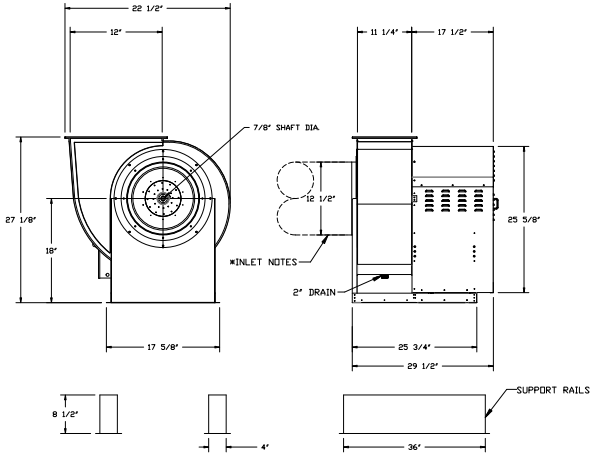

NORMAL TEMPERATURE TEST DIRECT DRIVE
EXHAUST FAN MUST OPERATE CONTINUOUSLY WHILE EXHAUSTING AIR AT 350°F (176°C) UNTIL ALL FAN PARTS HAVE REACHED THERMAL EQUILIBRIUM, AND WITHOUT ANY DETERIORATING EFFECTS TO THE FAN WHICH WOULD CAUSE UNSAFE OPERATION.

* INLET NOTES:
LENGTH OF THE STRAIGHT DUCT ON THE INLET TO BE 3 TIMES THE EQUIVALENT DUCT DIAMETER BEFORE CONNECTING TO ANY FITTINGS SUCH AS ELBOWS TO AVOID SYSTEM EFFECT.

DISHWASHER FAN
SEE ITEM
K
ON ROOF PLAN

FEATURES:

- ROOF MOUNTED FANS
- UL705
- UL762 AND ULC-S645 (RESTAURANT MODEL)
- HIGH HEAT OPERATION DIRECT DRIVE 350°F (176°C)
- HIGH HEAT OPERATION BELT DRIVE 350°F (176°C)
- HEAT SLINGER
- WEATHERPROOF DISCONNECT
- GREASE CLASSIFICATION TESTING
- 2" DRAIN
- MOTOR WEATHER COVER
- FULLY SEALED SCROLL HOUSING
- SCROLL ACCESS DOOR
- FLANGE 1 1/4" - 11 THRU 20.
- FLANGE 2" - 24 THRU 36.

OPTIONS

BI - DISCHARGE ORIENTATION VERTICAL UPPER LEFT - CW INLET SIDE.
BI11 - DISCHARGE SCREEN.
BI11 - INLET RING USED TO CONNECT NON-FACTORY DUCT.
RUBBER VIBRATION ISOLATORS FOR BI UTILITY SETS (SET OF 6).
VAV PACKAGE W/ MANUAL CONTROL (VFD INCLUDED).
VFD FACTORY MOUNTED AND WIRED IN EXHAUST FAN.

REVISIONS

DESCRIPTION	DATE:

CAPTIVEAIRE
Oregon Office
2702 NE 114th Ave, Suite 2, Vancouver, WA 98684 PHONE: (360) 828-5418 FAX: (919) 227-5983 EMAIL: regPA@captiveaire.com
www.captiveaire.com

18S Commercial Kitchen Portland
PORTLAND, OR, 97217

DATE: 9/25/2019

DWG.#: 3993538

DRAWN BY: Sean Elias

SCALE: 3/4" = 1'-0"

MASTER DRAWING

SHEET NO. 8

EXHAUST FAN INFORMATION – Job#3993538

FAN UNIT NO.	TAG	FAN UNIT MODEL #	CFM	ESP.	RPM	H.P.	B.H.P.	ø	VOLT	FLA	DISCHARGE VELOCITY	WEIGHT (LBS.)	SONES
1	KEX-1	USBI24DD-RM	3500	3.000	1178	5.000	3.5450	3	208	15.5	1160 FPM	766	27
3	TYPE II EXHAUST	USBI11DD-RM	800	2.000	2168	1.000	0.6320	3	208	3.0	853 FPM	191	17.4

MUA FAN INFORMATION – Job#3993538

FAN UNIT NO.	TAG	FAN UNIT MODEL #	BLOWER	HOUSING	MIN CFM	DESIGN CFM	ESP.	RPM	H.P.	B.H.P.	ø	VOLT	FLA	EVAP COOLER ENTERING DB TEMP.	EVAP COOLER ENTERING WB TEMP.	EVAP COOLER LEAVING DB TEMP.	EVAP COOLER LEAVING WB TEMP.	WEIGHT (LBS.)	SONES	BURNER EFFICIENCY(%)
2	MUA-1	A2-D.250-20D	20MF-2-MOD	A2-D.250	2000	3100	0.500	1347	2.000	1.3980	3	208	7.3	90.0°F	67.0°F	71.0°F	67.0°F	1134	12.2	92

GAS FIRED MAKE-UP AIR UNIT(S)

FAN UNIT NO.	TAG	INPUT BTUs	OUTPUT BTUs	TEMP. RISE	REQUIRED INPUT GAS PRESSURE	GAS TYPE
2	MUA-1	237125	218155	65 deg F	7 in. w.c. – 14 in. w.c.	Natural

FAN OPTIONS

FAN UNIT NO.	TAG	OPTION (Qty. – Descr.)
1	KEX-1	1 – BI24 – 24" Discharge Extension.
		1 – BI – Discharge Orientation Vertical Upper Left – CW Inlet Side.
		1 – BI24 – Inlet Connection Standard 24" Flanged Grease Duct.
		1 – Utility Set Grease Cup
		1 – Utility Set – Spring Vibration Isolators – BI24 Thru BI30 / Equivalent Sized Utility Set – Indoor/Outdoor use.
2	MUA-1	1 – Motorized Backdraft Damper for A2-D Housing
		1 – Low Fire Start
		1 – Inlet Pressure Gauge, 0-35"
		1 – Manifold Pressure Gauge, -5 to 15" wc
		1 – Insulation Option for VBank filter section
		1 – Freeze Protection Drain Kit for Evaporative Coolers
		1 – DF 2 Indoor Hanging Option – Includes 2 HSA125 Hanging Spring Isolators per Uni-Strut
		1 – Single Electrical Cabinet LED Lights Used on Modular MUA Units
		1 – Separate 120V Wiring Package (Required and used only for DCV or Prewire with VFD) – Three Phase Only
		1 – Size 2 Direct Fired Heater Low CFM Profile Package. Used on Heaters under 2500 cfm.
3	TYPE II EXHAUST	1 – BI – Discharge Orientation Vertical Upper Left – CW Inlet Side.
		1 – BI11 – Discharge Screen.
		1 – BI11 – Inlet Ring Used To Connect Non-Factory Duct.
		1 – Rubber Vibration Isolators for BI Utility Sets (set of 6)
		1 – VAV Package w/ Manual Control (VFD Included)
		1 – VFD factory mounted and wired in Exhaust Fan.

FAN ACCESSORIES

FAN UNIT NO.	TAG	EXHAUST			SUPPLY			
		GREASE CUP	GRAVITY DAMPER	WALL MOUNT	SIDE DISCHARGE	GRAVITY DAMPER	MOTORIZED DAMPER	WALL MOUNT
1	KEX-1	YES						
2	MUA-1				YES		YES	
3	TYPE II EXHAUST							

CURB ASSEMBLIES

NO.	ON FAN	TAG	WEIGHT	ITEM	SIZE
1	# 1	KEX-1	31 LBS	Rail	4.000"W x 60.000"L x 4.000"H Comes as a set of 2.
3	# 3	TYPE II EXHAUST	19 LBS	Rail	4.000"W x 36.000"L x 8.500"H Comes as a set of 2.

FAN SOUND INFORMATION

FAN UNIT NO.	MOTOR	RPM	LWA	SONES	DBA	DISTANCE FT	OCTAVE 1	OCTAVE 2	OCTAVE 3	OCTAVE 4	OCTAVE 5	OCTAVE 6	OCTAVE 7	OCTAVE 8
1	Exhaust	1178	87.9	27	76.4	5	88.9	91.4	91.6	85.3	79.1	76.9	72	64.5
2	Supply	1347	75	12.2	63.5	5	70.8	78.4	73.3	72.7	69.1	66.3	63.4	59.9
3	Exhaust	2168	81.5	17.4	70	5	74	84.5	83.6	79.6	75.3	70.3	64.4	58.4

FAN #1 USBI24DD-RM-S – EXHAUST FAN (KEX-1)

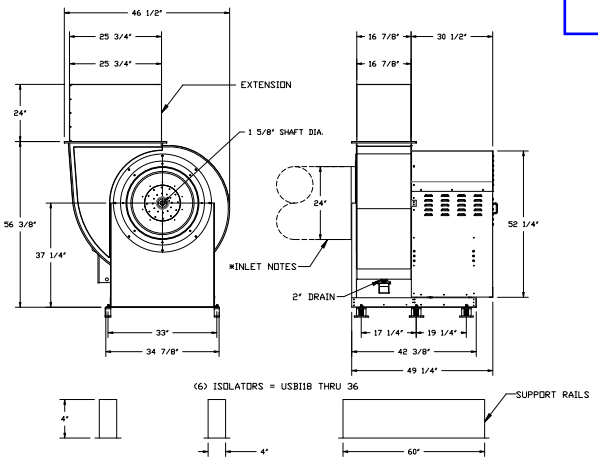

NORMAL TEMPERATURE TEST DIRECT DRIVE
EXHAUST FAN MUST OPERATE CONTINUOUSLY WHILE EXHAUSTING AIR AT 350°F (176°C) UNTIL ALL FAN PARTS HAVE REACHED THERMAL EQUILIBRIUM, AND WITHOUT ANY DETERIORATING EFFECTS TO THE FAN WHICH WOULD CAUSE UNSAFE OPERATION.

* INLET NOTES:
LENGTH OF THE STRAIGHT DUCT ON THE INLET TO BE 3 TIMES THE EQUIVALENT DUCT DIAMETER BEFORE CONNECTING TO ANY FITTINGS SUCH AS ELBOWS TO AVOID SYSTEM EFFECT.

GREASE HOOD FAN
SEE ITEM
L
ON ROOF PLAN

FEATURES:

- ROOF MOUNTED FANS
- UL705
- UL762 AND ULC-S645 (RESTAURANT MODEL)
- HIGH HEAT OPERATION DIRECT DRIVE 350°F (176°C)
- HIGH HEAT OPERATION BELT DRIVE 350°F (176°C)
- HEAT SLINGER
- WEATHERPROOF DISCONNECT
- GREASE CLASSIFICATION TESTING
- 2" DRAIN
- MOTOR WEATHER COVER
- FULLY SEALED SCROLL HOUSING
- SCROLL ACCESS DOOR
- FLANGE 1 1/4" – 11 THRU 20.
- FLANGE 2" – 24 THRU 36.

OPTIONS

BI24 – 24" DISCHARGE EXTENSION.
BI – DISCHARGE ORIENTATION VERTICAL UPPER LEFT – CW INLET SIDE.
BI24 – INLET CONNECTION STANDARD 24" FLANGED GREASE DUCT.
UTILITY SET GREASE CUP.
UTILITY SET – SPRING VIBRATION ISOLATORS – BI24 THRU BI30 / EQUIVALENT SIZED UTILITY SET – INDOOR/OUTDOOR USE.

REVISIONS

DESCRIPTION	DATE:

CAPTIVEAIRE
www.captiveaire.com
Oregon Office
2702 NE 114th Ave, Suite 2, Vancouver, WA 98684 PHONE: (360) 828-5418 FAX: (919) 227-5983 EMAIL: regPA@captiveaire.com

18S Commercial Kitchen Portland
PORTLAND, OR, 97217

DATE: 9/25/2019

DWG.#: 3993538

DRAWN BY: Sean Elias

SCALE: 3/4" = 1'-0"

MASTER DRAWING

SHEET NO. 5