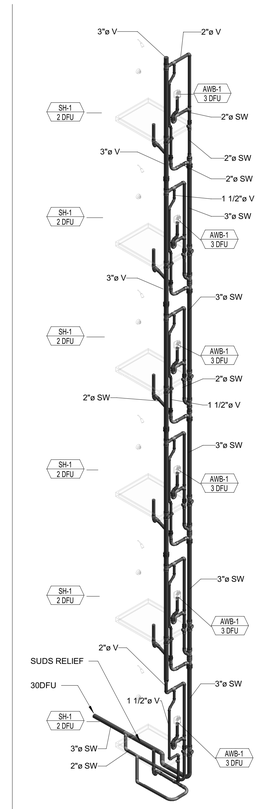


1 W&V-01 - SH & AWB
P07.00

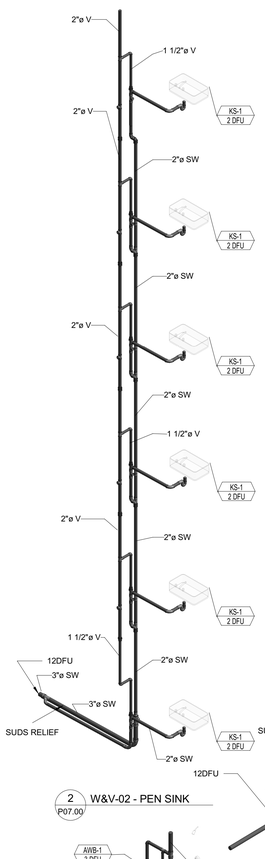


2 W&V-02 - PEN SINK
P07.00

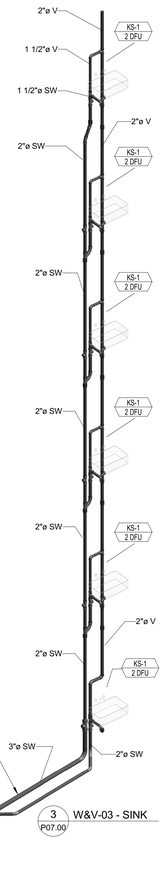


3 W&V-03 - SINK
P07.00

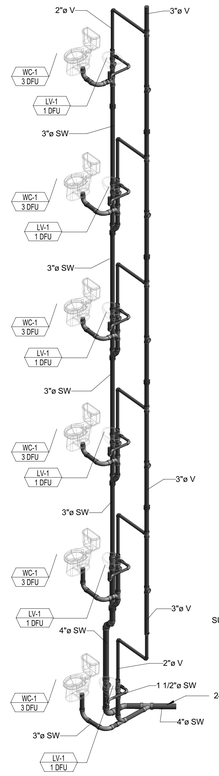


4 W&V-04 - VWV
P07.00

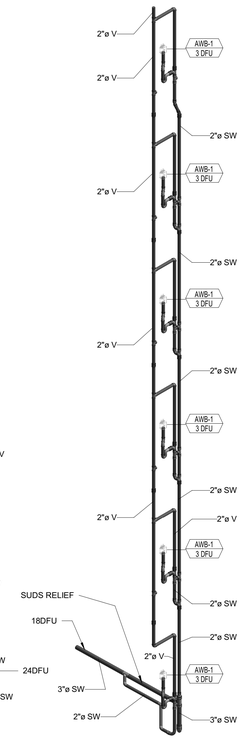


5 W&V-05 - AWB
P07.00

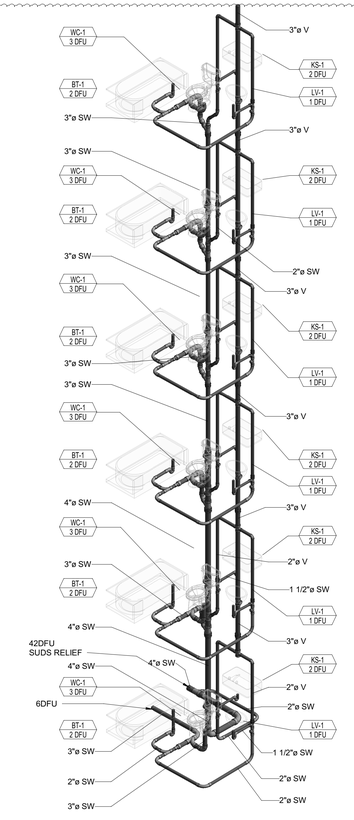


6 W&V-06 - HWV & SINK
P07.00

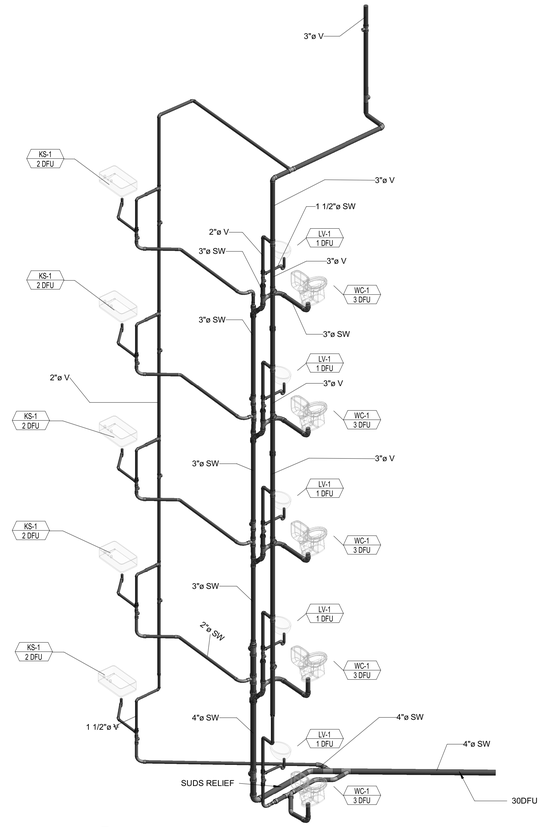


7 W&V-07 - VWV & STUDOR
P07.00

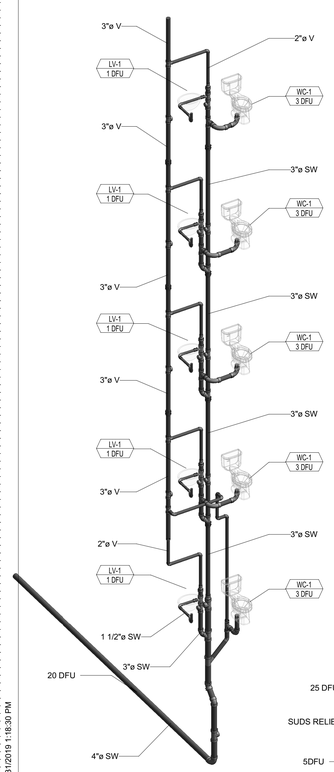


8 W&V-08 - VWV
P07.00

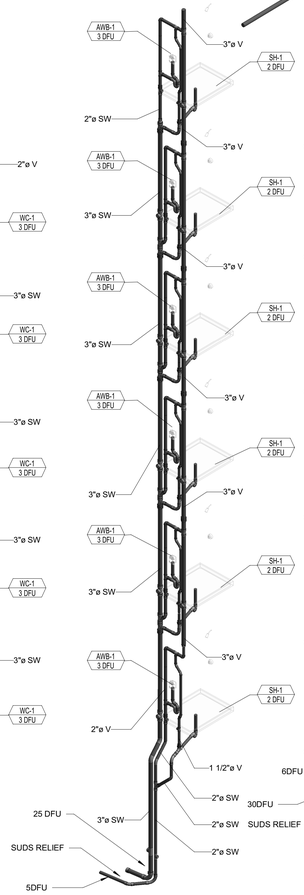


9 W&V-09 - SHOWER & AWB
P07.00

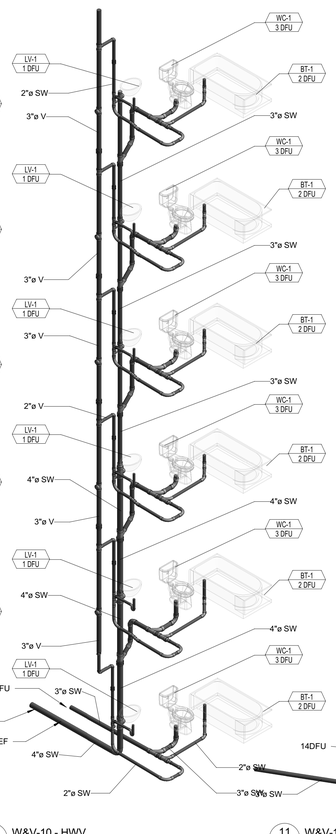


10 W&V-10 - HWV
P07.00

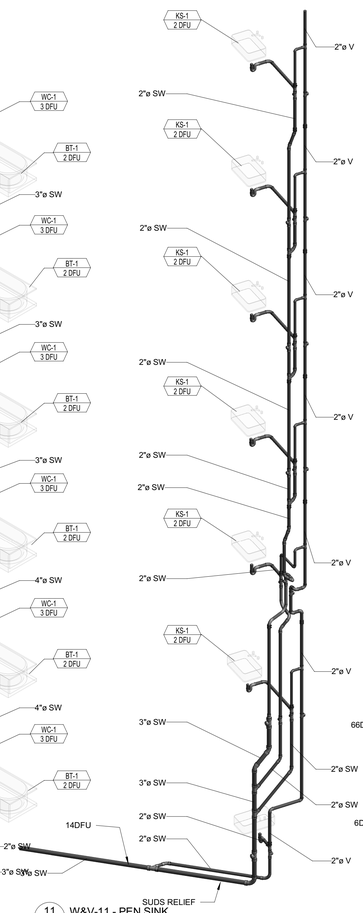


11 W&V-11 - PEN SINK
P07.00

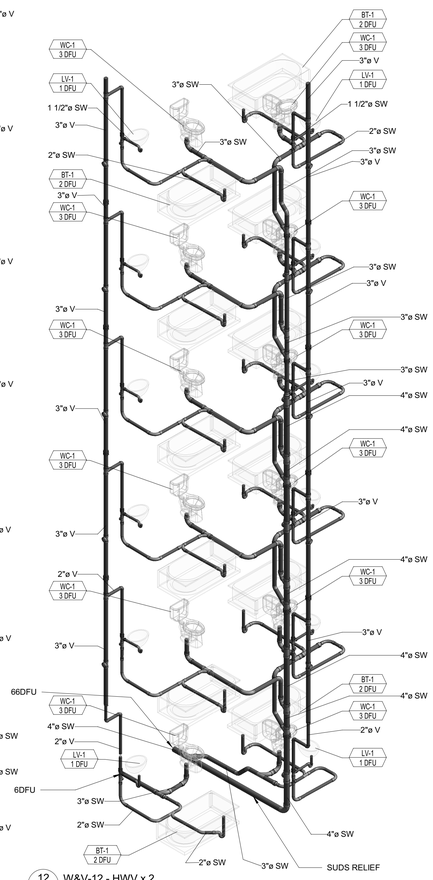


12 W&V-12 - HWV x 2
P07.00

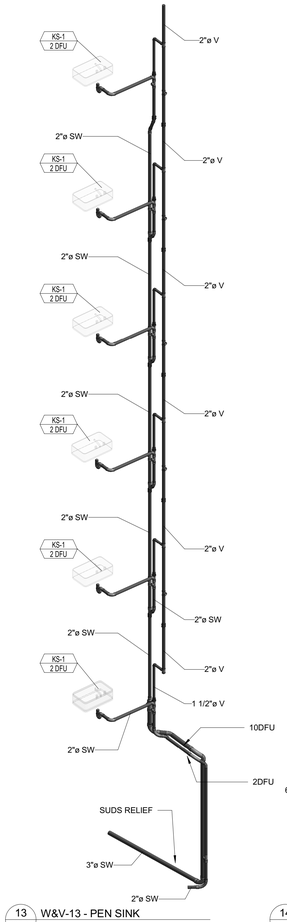


13 W&V-13 - PEN SINK
P07.00

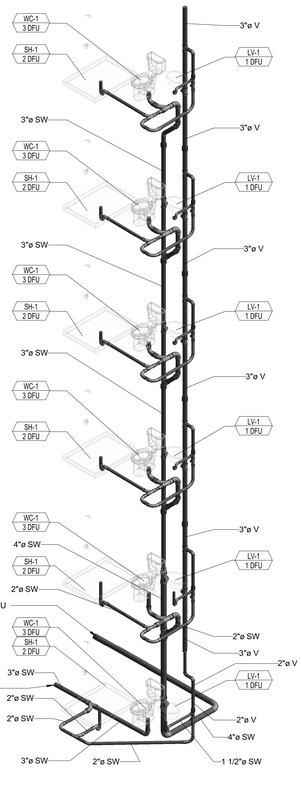


14 W&V-14 - HWV
P07.00

City Of Portland

REVIEWED FOR CODE COMPLIANCE

Date: 02/11/20

Project: 19-106743-REV-01-CO

American Heating, Inc.
PORTLAND, OREGON 97202-4765
TELEPHONE (503) 239-4400 FAX (503) 239-4401

THIS DRAWING IS THE PROPERTY OF AMERICAN HEATING, INC. IT IS PROVIDED FOR REVIEW AND INFORMATION PURPOSES ONLY. THE REPRODUCTION, SUBSTANTIAL USE OR DISCLOSURE WITHOUT WRITTEN CONSENT OF AMERICAN HEATING, INC. IS PROHIBITED. ANY USE OF THIS DRAWING FOR CONSTRUCTION OR FABRICATION PURPOSES IS PROHIBITED UNLESS AUTHORIZED BY AMERICAN HEATING, INC. IN WRITING. THIS DRAWING IS PROVIDED ON AN "AS IS" BASIS. AMERICAN HEATING, INC. MAKES NO REPRESENTATIONS OR WARRANTIES OF ANY KIND, EXPRESS OR IMPLIED, ARISING OUT OF THIS DRAWING, INCLUDING, BUT NOT LIMITED TO, THE IMPLIED WARRANTIES OF MERCHANTABILITY OR FITNESS FOR A PARTICULAR PURPOSE. AMERICAN HEATING, INC. ASSUMES NO RESPONSIBILITY FOR THE ACCURACY, COMPLETENESS, SUFFICIENCY OR USEFULNESS OF THIS DRAWING. ANY USE OF THIS DRAWING WITHOUT WRITTEN CONSENT OF AMERICAN HEATING, INC. IS AT THE SOLE RISK OF THE USER.

08/23/18
B. SHEA
J. LOVELL
418309

REGISTERED PROFESSIONAL ENGINEER
80947PE
DIGITALLY SIGNED
OREGON
JAMES D. SCOTT - PRACTICE
RENEWS: 12-31-2019
NOT VALID UNLESS DIGITALLY SIGNED

**18S**
GREYSTAR
1715 SW Salmon St
Portland, OR 97205

REVISIONS

| | | |
|---|---|---|
| A | PERMIT RESPONSE 1 | 06/03/2019 |
| 3 | AB-01 | 09/27/2019 |

CHECKED BY: Checker
ISSUE DATE: 27 SEP 2019
PROJECT NO: 1803002

# PLUMBING W&V RISER DIAGRAMS

# P07.00

CONSTRUCTION SET

10/31/2019 1:18:30 PM