© Copyright protected. See Design Agreement. For use on this project only. Unauthorized reproduction of any part of this material is prohibited.

10/31/2019 12:06:13 PM SERA Design and Architecture, Inc.

KEYED NOTES

6 7/8" APA RATED SHEATHING.

7 (3) EQUALLY SPACED STRINGERS USE 2x6 EACH SIDE OF NOTCHED 2x12 FOR CENTER STIRNGER. USE 2x6 ONE SIDE OF NOTCHED 2x12 FOR OUTER STINGER. REF DETAILS 1 & 5/S05.03.

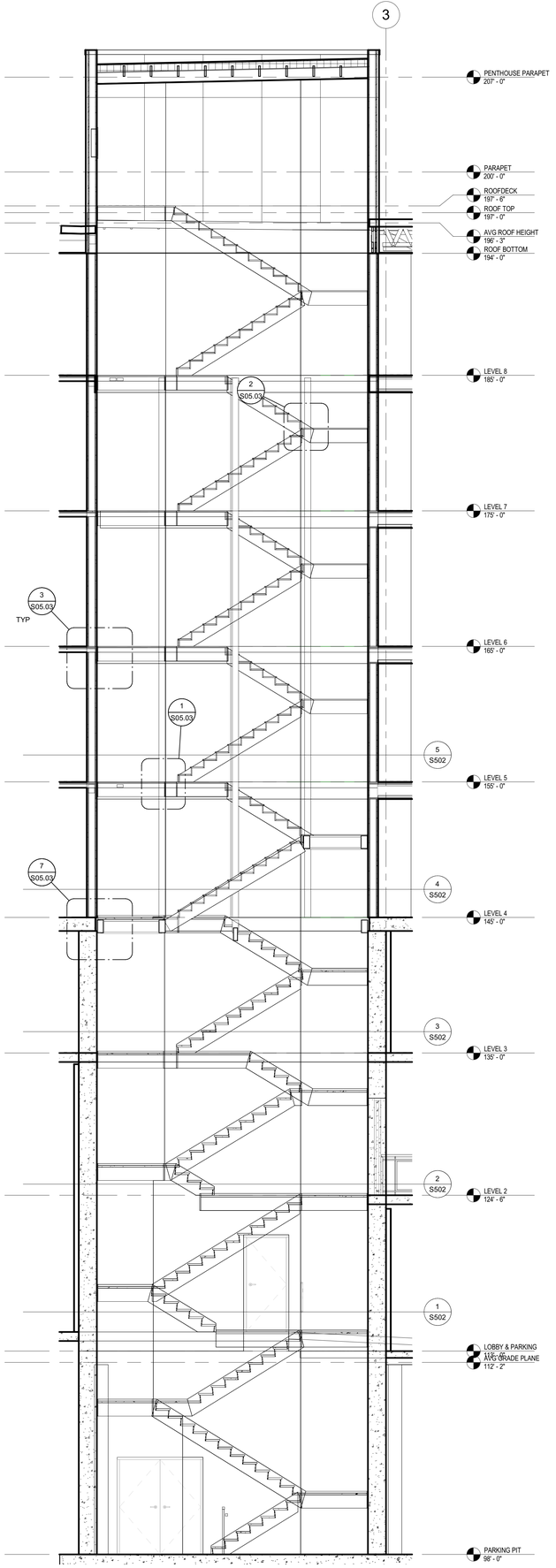

6 S05.02 EAST STAIR SECTION
1/4" = 1'-0"

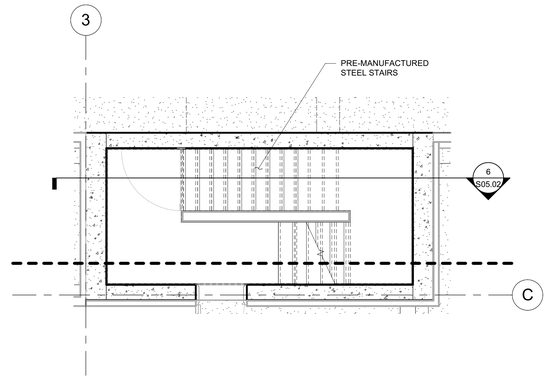

1 S05.02 EAST STAIR PLAN - LEVEL 1
1/4" = 1'-0"

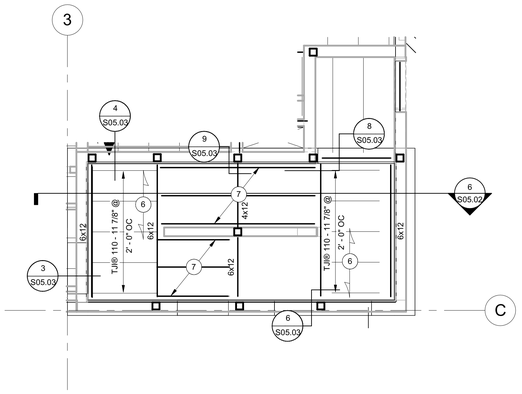

4 S05.02 EAST STAIR PLAN - LEVEL 4
1/4" = 1'-0"

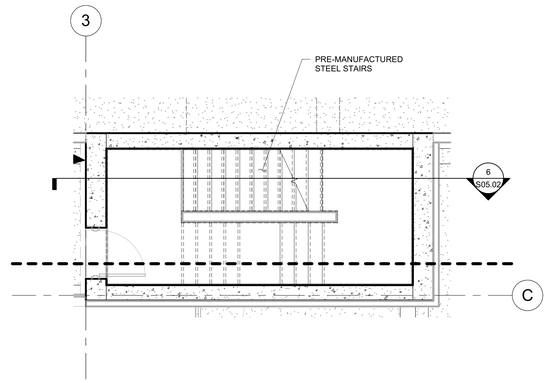

2 S05.02 EAST STAIR PLAN - LEVEL 2
1/4" = 1'-0"

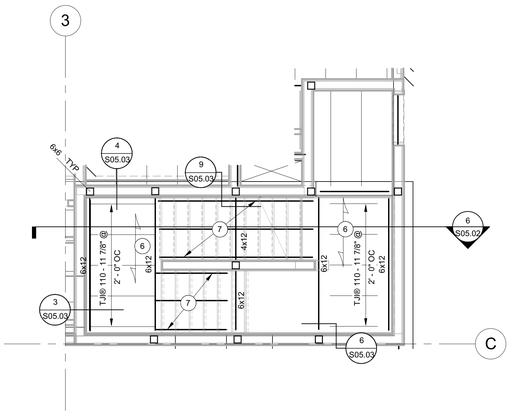

5 S05.02 EAST STAIR PLAN - LEVELS 5-8
1/4" = 1'-0"

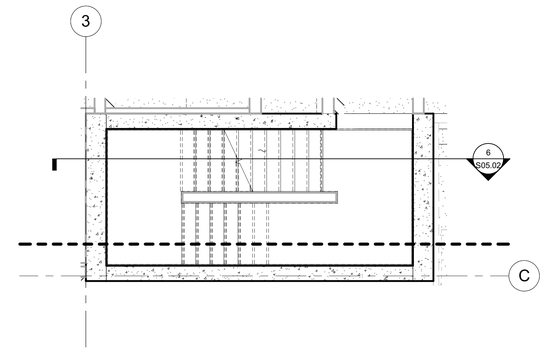

3 S05.02 EAST STAIR PLAN - LEVEL 3
1/4" = 1'-0"

City Of Portland
REVIEWED FOR CODE COMPLIANCE
Date: 02/11/20
Project: 19-105743-REV-01-CO

SERA

ARCHITECTURE
URBAN DESIGN + PLANNING
INTERIOR DESIGN

PORTLAND OREGON 97209
P: 503.445.7372
F: 503.445.7395
SERADESIGN.COM

REGISTERED PROFESSIONAL ENGINEER STRUCTURAL 51411PE OREGON SEPT. 22, 1989 TIMOTHY T. TERCH EXPIRES 6-30-20

FROELICH ENGINEERS
17700 SW Upper Boones Ferry Rd. Suite #115
Portland, Oregon 97223
503.624.7005
froelich-engineers.com
18-T066

18S
GREYSTAR
1715 SW Salmon St
Portland, OR 97205

REVISIONS

A	PERMIT RESPONSE 1	6/03/2019
3	AB 01	9/27/2019

CHECKED BY: Checker
ISSUE DATE: 27 SEP 2019
PROJECT NO: 1803002

STAIR PLANS AND ELEVATIONS

S05.02

Construction Set