© Copyright protected. See Design Agreement. For use on this project only. Unauthorized reproduction of any part of this material is prohibited.

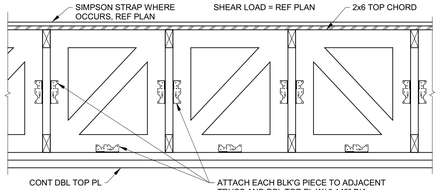

SECTION A-A

TRUSS MANUF TO DESIGN ALL DRAG STRUT TRUSSES FOR THE FOLLOWING:
1. SHEAR LOADS AS INDICATED, MIN 260 PLF
2. TRUSS TO COLLECT SHEAR LOADS AND TRANSFER TO BOTTOM CORD THROUGH WEB MEMBERS
3. TOP BOTTOM CORDS TO HAVE CAPACITY OF TRANSFERRING SHEAR LOAD THROUGH SPLICES
4. EDGE NAIL SHEATHING TO DRAG STRUTS

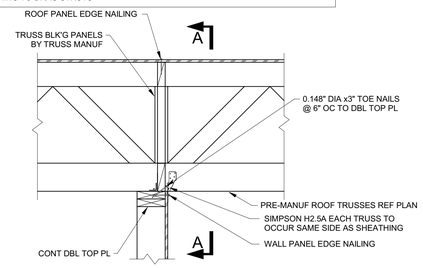

11 S07.01 DRAG TRUSS - BLOCKING AND STRAPS
1" = 1'-0"

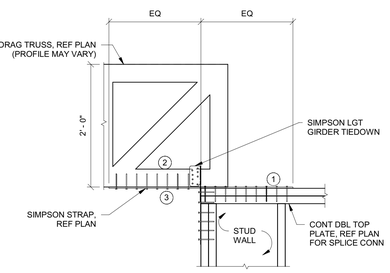

INSTALLATION:
1. NAIL HALF OF THE STRAP TO THE TOP OF THE DBL TOP PLATE PRIOR TO PLACEMENT OF ROOF TRUSS.
2. PLACE DRAG TRUSS.
3. NAIL REMAINING HALF OF THE STRAP TO THE BOTTOM OF THE DRAG TRUSS.

12 S07.01 DRAG TRUSS - CONNECTION TO WALL
1" = 1'-0"

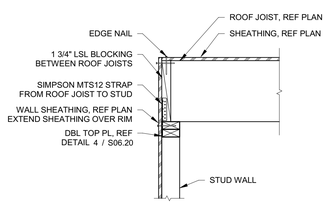

13 S07.01 ROOF JOIST TO STUD WALL
1" = 1'-0"

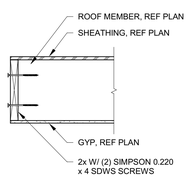

14 S07.01 ROOF MEMBER DETAIL
1" = 1'-0"

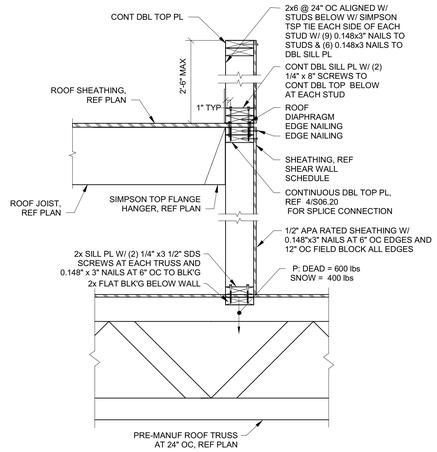

8 S07.01 UPPER GENERATOR RM ROOF TO LOWER ROOF
1" = 1'-0"

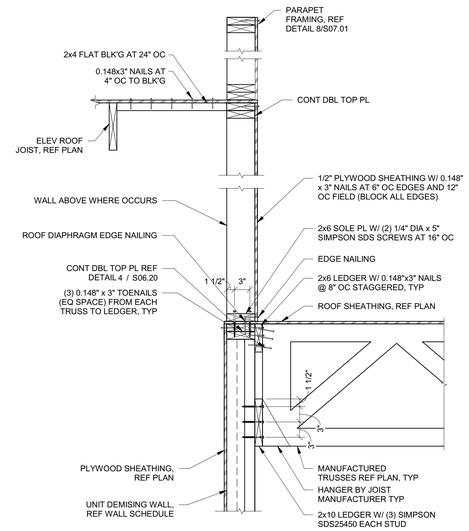

9 S07.01 PENT HOUSE - STAIR WALL AT ROOF WITH ELEVATOR ROOF ABOVE
1" = 1'-0"

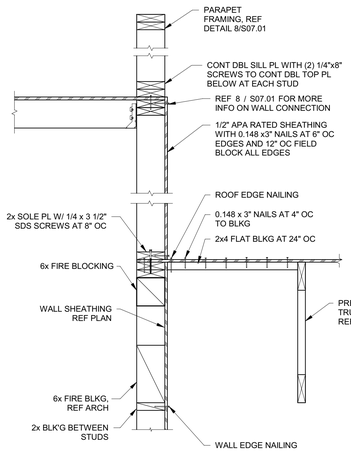

10 S07.01 STAIR WALL AT ROOF
1" = 1'-0"

TRUSS MANUF TO DESIGN ALL DRAG STRUT TRUSSES FOR THE FOLLOWING:
1. SHEAR LOADS AS INDICATED
2. TRUSS TO COLLECT SHEAR LOADS AND TRANSFER TO BOTTOM CORD THROUGH WEB MEMBERS.
3. TOP BOTTOM CORDS TO HAVE CAPACITY OF TRANSFERRING SHEAR LOAD THROUGH SPLICES.
4. EDGE NAIL SHEATHING TO DRAG STRUTS.

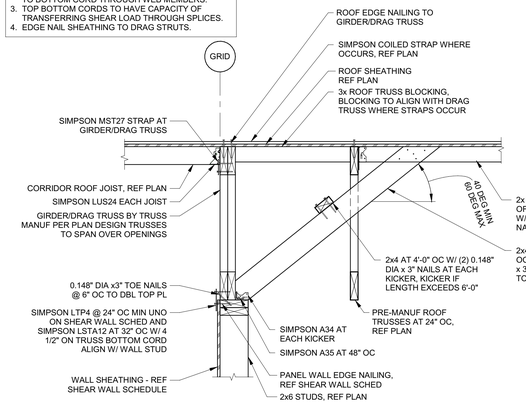

4 S07.01 TRUSS CONNECTION TO CORRIDOR WALL
1" = 1'-0"

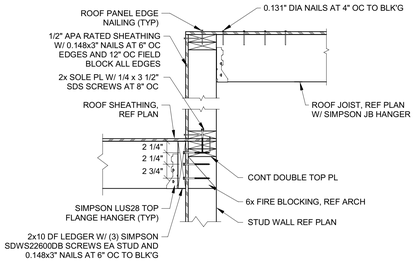

5 S07.01 ELEVATOR WALL AT ROOF
1" = 1'-0"

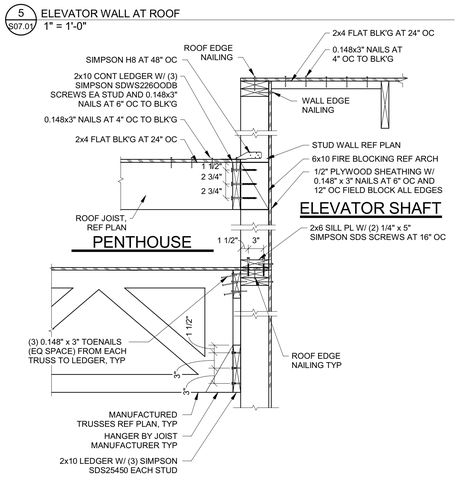

6 S07.01 ELEVATOR/PENTHOUSE WALL AT ROOF
1" = 1'-0"

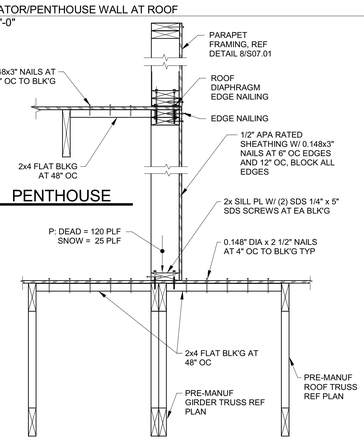

7 S07.01 UPPER GENERATOR RM ROOF TO LOWER ROOF
1" = 1'-0"

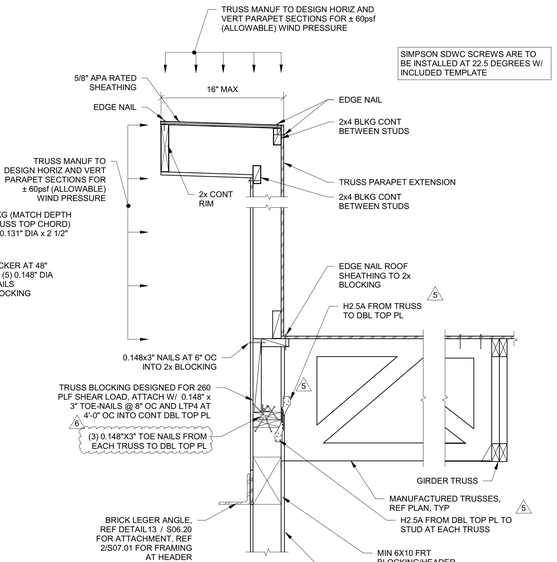

1 S07.01 ROOF TRUSS PARAPET
1" = 1'-0"

-REF DETAIL 1/S07.01 & 22/S7.02 FOR MORE INFORMATION

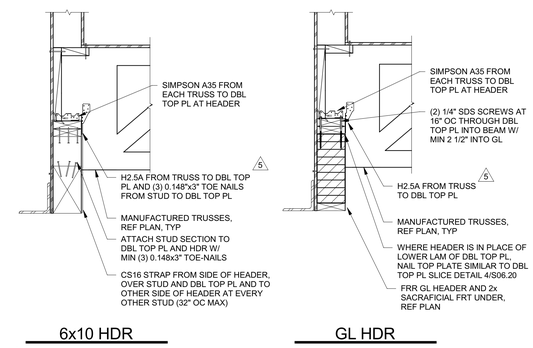

2 S07.01 ROOF TRUSS PARAPET - TRUSS OVER HEADER
1" = 1'-0"

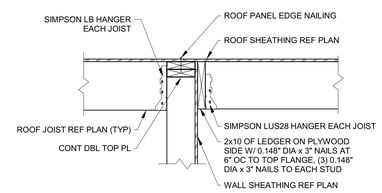

3 S07.01 STAIR WALL AT ROOF
1" = 1'-0"

City Of Portland

REVIEWED FOR CODE COMPLIANCE

Date: 02/11/20

Project: 19-105743-REV-01-CO

SERA

ARCHITECTURE
URBAN DESIGN + PLANNING
INTERIOR DESIGN

PORTLAND OREGON 97209
P: 503.445.7372
F: 503.445.7395
SERADESIGN.COM

REGISTERED PROFESSIONAL ENGINEER 51411PE OREGON SEPT. 22, 1989 TIMOTHY T. TERCH
EXPIRES 6-30-20

FROELICH ENGINEERS
17700 SW Upper Boones Ferry Rd. Suite #115
Portland, Oregon 97223
503.624.7005
froelich-engineers.com
18-T066

18S
GREY'STAR
1715 SW Salmon St
Portland, OR 97205

REVISIONS

A	PERMIT RESPONSE 1	6/03/2019
B	PERMIT RESPONSE 2	7/26/2019
C	PERMIT RESPONSE 3	9/18/2019
D	PERMIT RESPONSE 4	10/04/2019
E	PERMIT RESPONSE 5	10/23/2019
4	AB 02	11/01/2019
5	AB 04	12/11/2019
6	AB 06	01/07/2020

CHECKED BY: Checker
ISSUE DATE: 27 SEP 2019
PROJECT NO: 18030O2

ROOF FRAMING DETAILS

S07.01

Construction Set