© Copyright protected. See Design Agreement. For use on this project only. Unauthorized reproduction of any part of this material is prohibited.

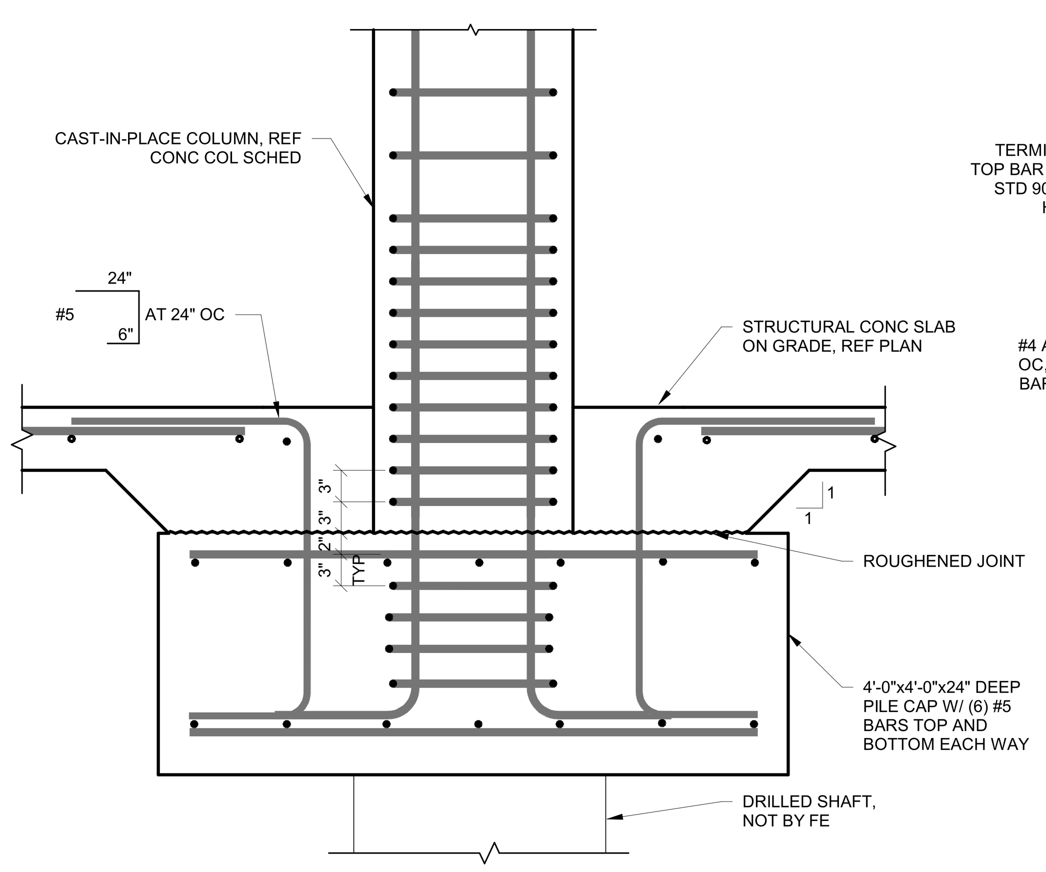

13 FOOTING AT CONCRETE COLUMN (S04.01)
1" = 1'-0"

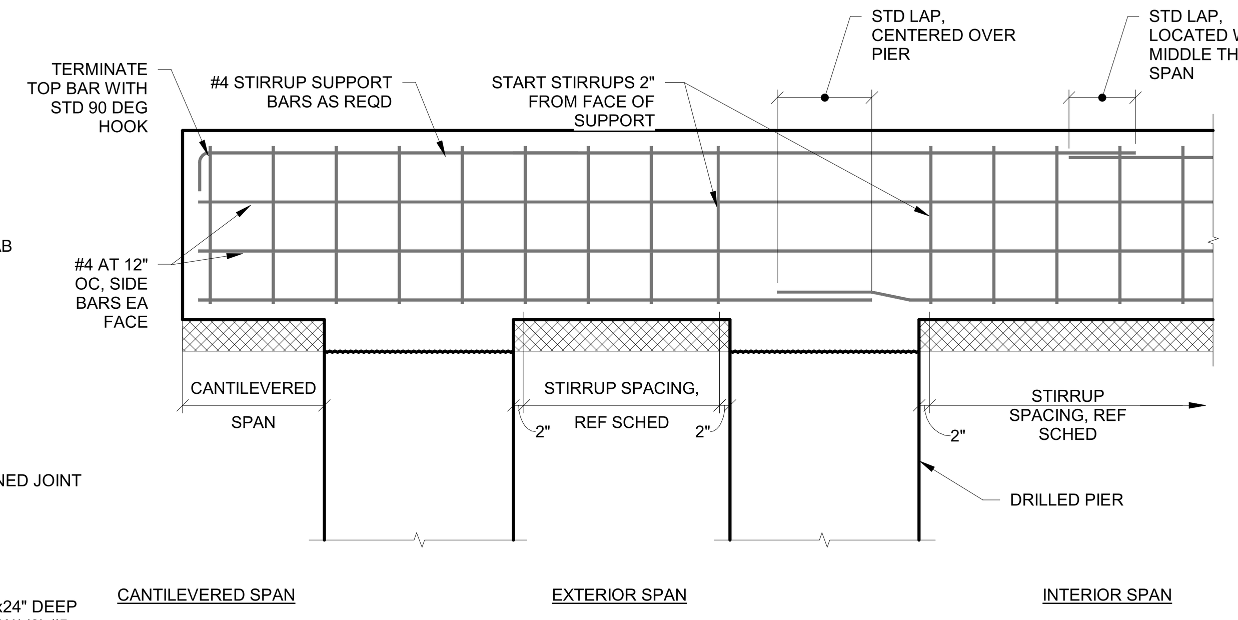

TYPICAL GRADE BEAM REINFORCING LAYOUT

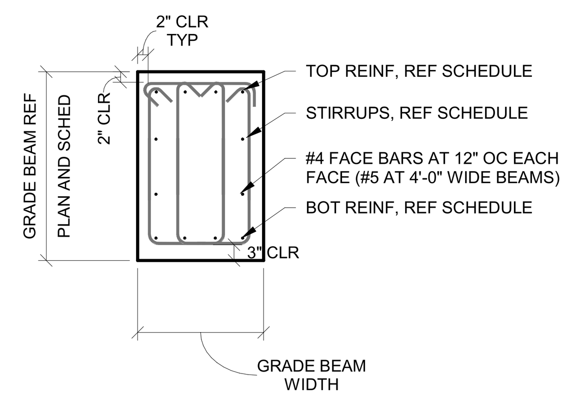

TYPICAL GRADE BEAM SECTION

9 STEPPED FOOTING (S04.01)
1/2" = 1'-0"

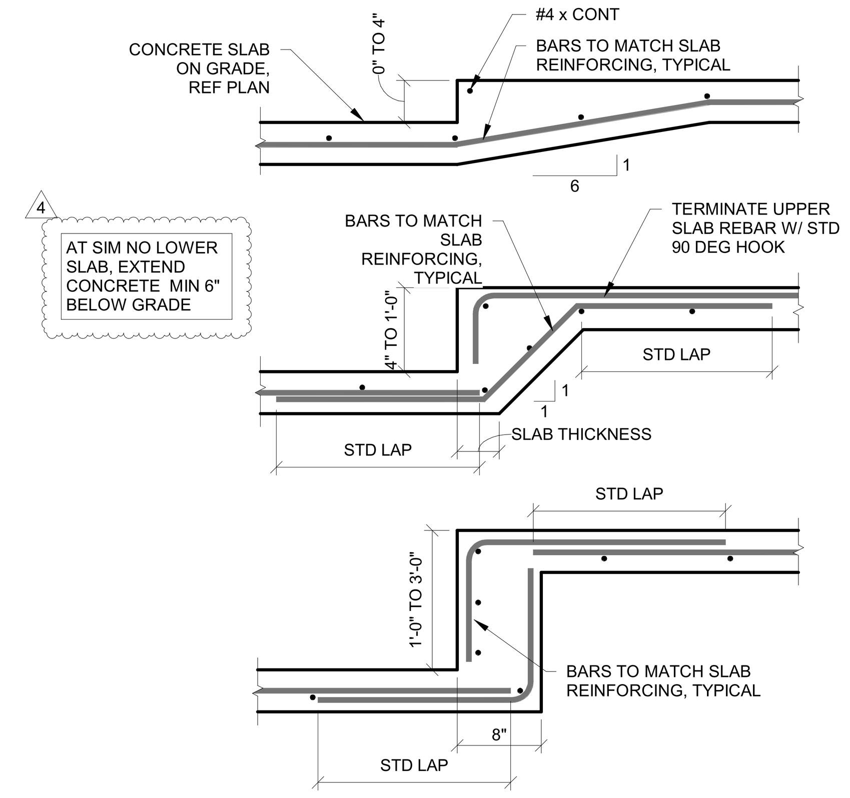

5 SLAB STEPS (S04.01)
1" = 1'-0"

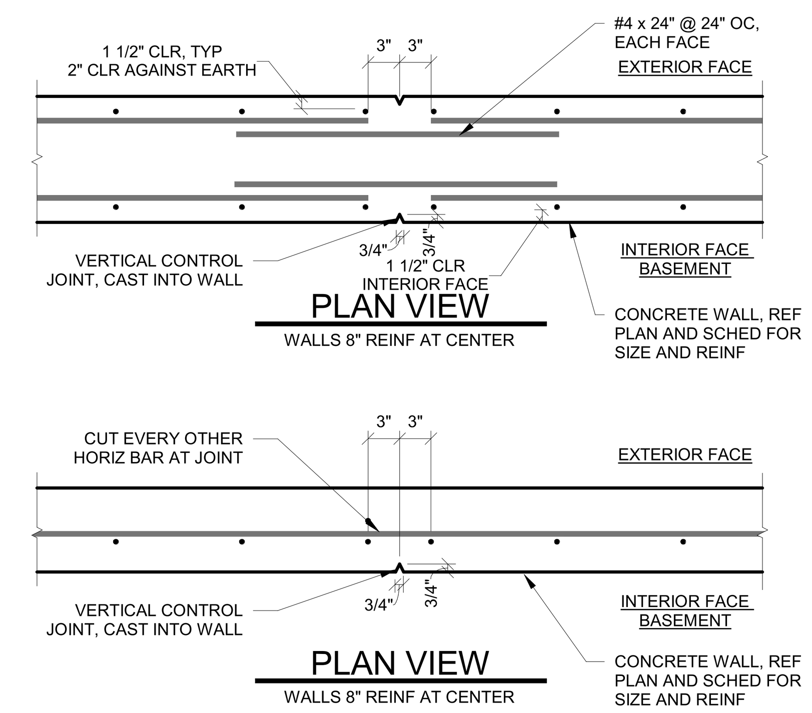

1 VERTICAL CONTROL JOINTS AT CONCRETE BASEMENT WALLS (S04.01)
1" = 1'-0"

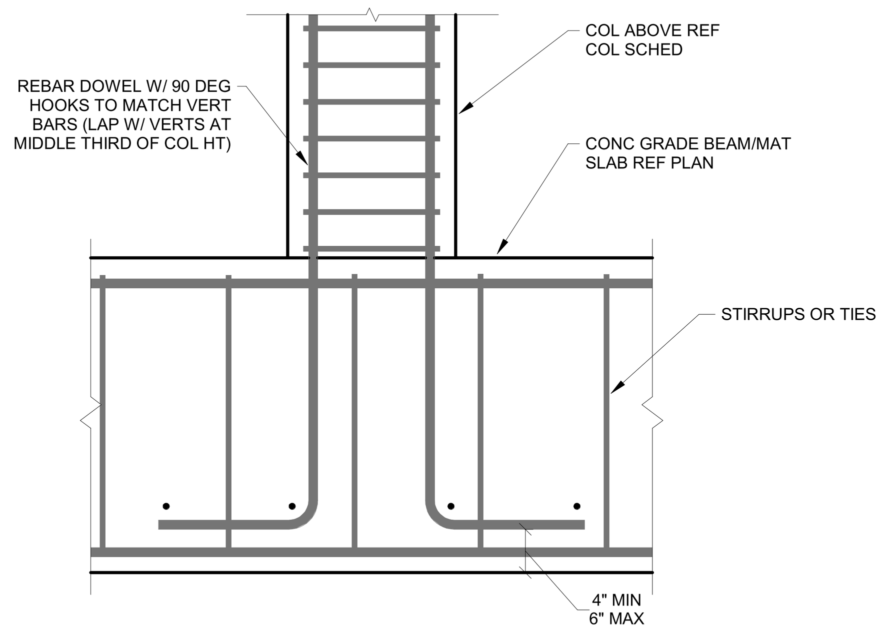

14 CONCRETE COLUMN TO CONCRETE BEAM (S04.01)
1" = 1'-0"

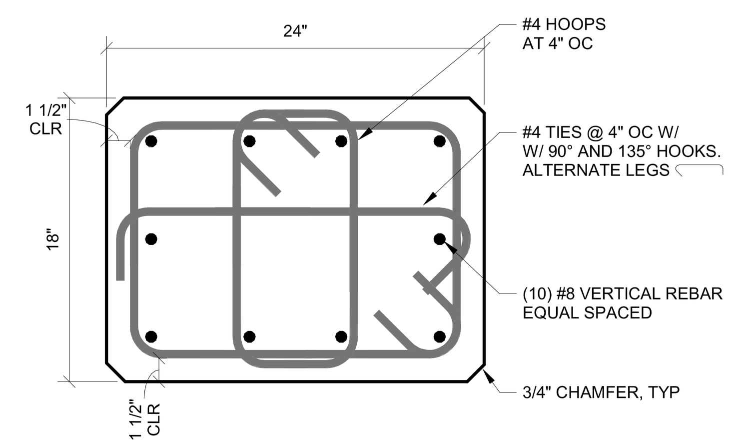

10 18" x 24" CONCRETE COLUMN (S04.01)
1 1/2" = 1'-0"

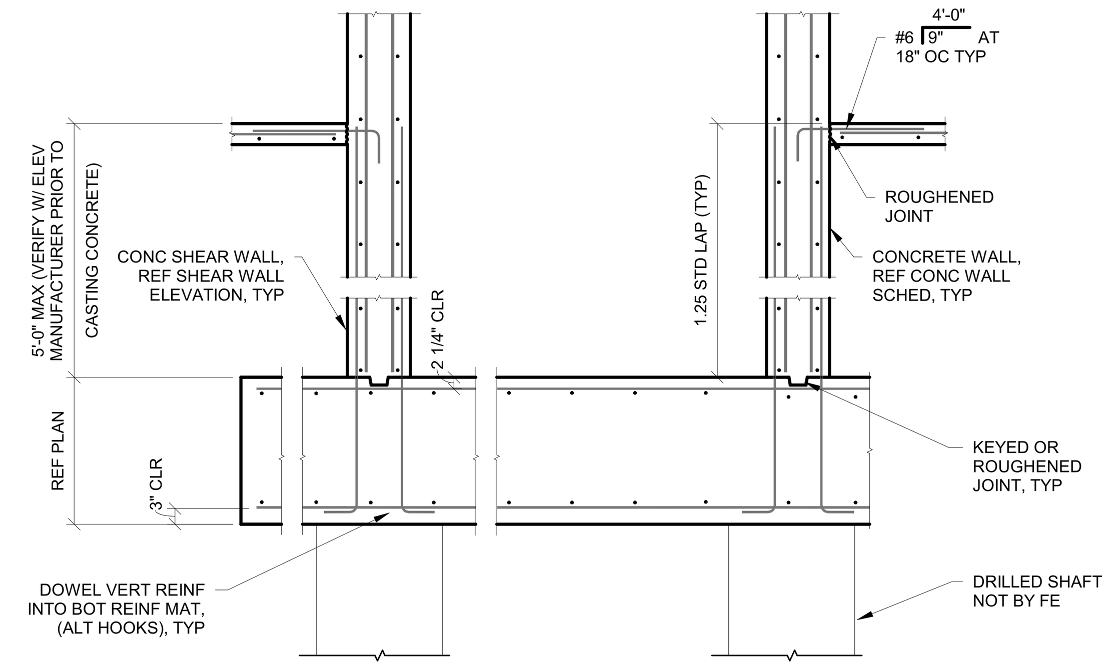

6 CONCRETE SHEAR WALL TO FOOTING (S04.01)
1/2" = 1'-0"

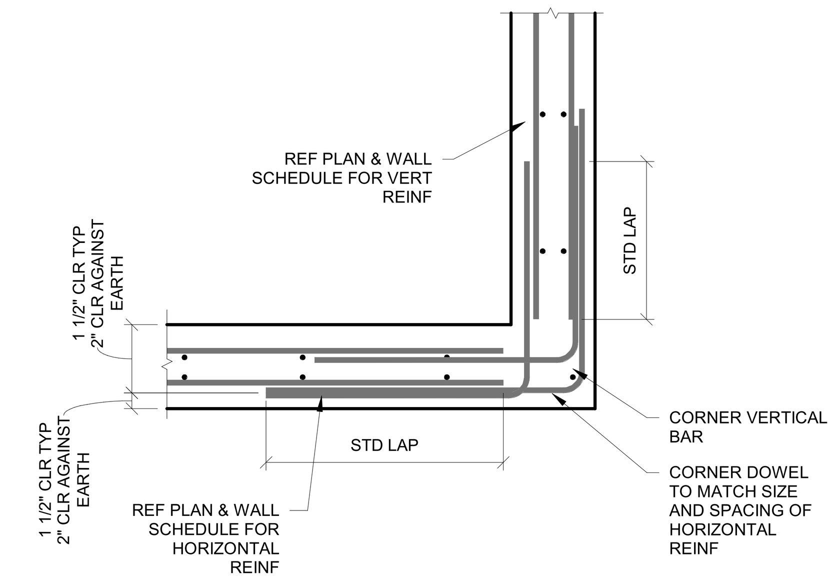

2 CONCRETE WALL CONNECTION AT CORNER - 2 LAYER - PLAN VIEW (S04.01)
1" = 1'-0"

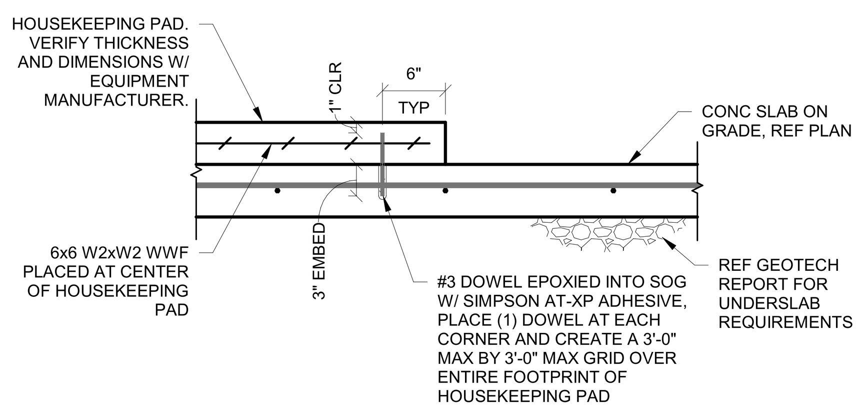

15 HOUSEKEEPING PAD AT SLAB ON GRADE (S04.01)
1" = 1'-0"

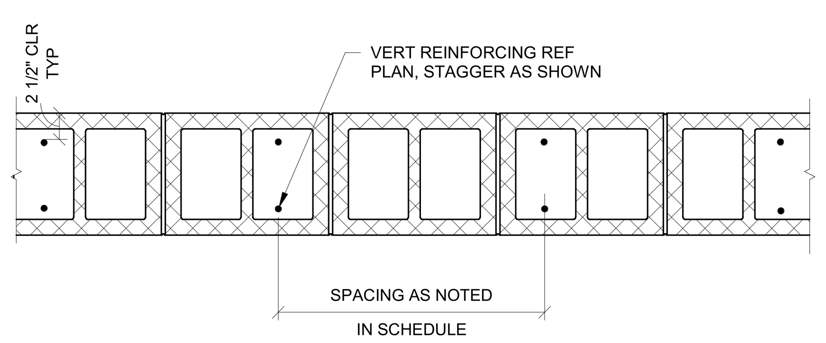

15A CMU WALL WITH REINFORCEMENT AT EACH FACE - PLAN VIEW (S04.01)
1" = 1'-0"

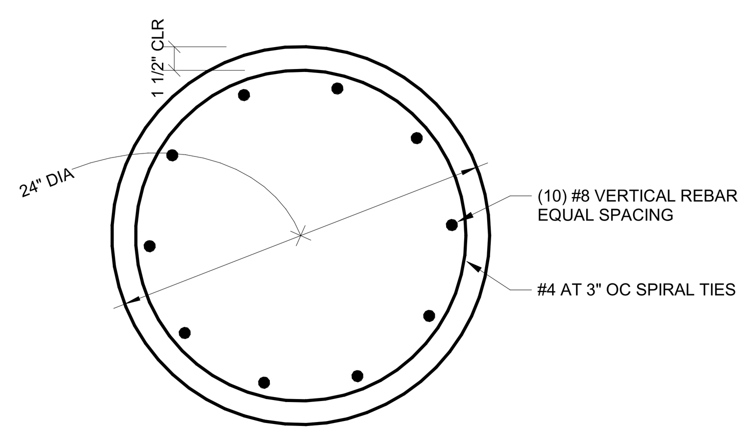

11 24" DIA CONCRETE COLUMN (S04.01)
1 1/2" = 1'-0"

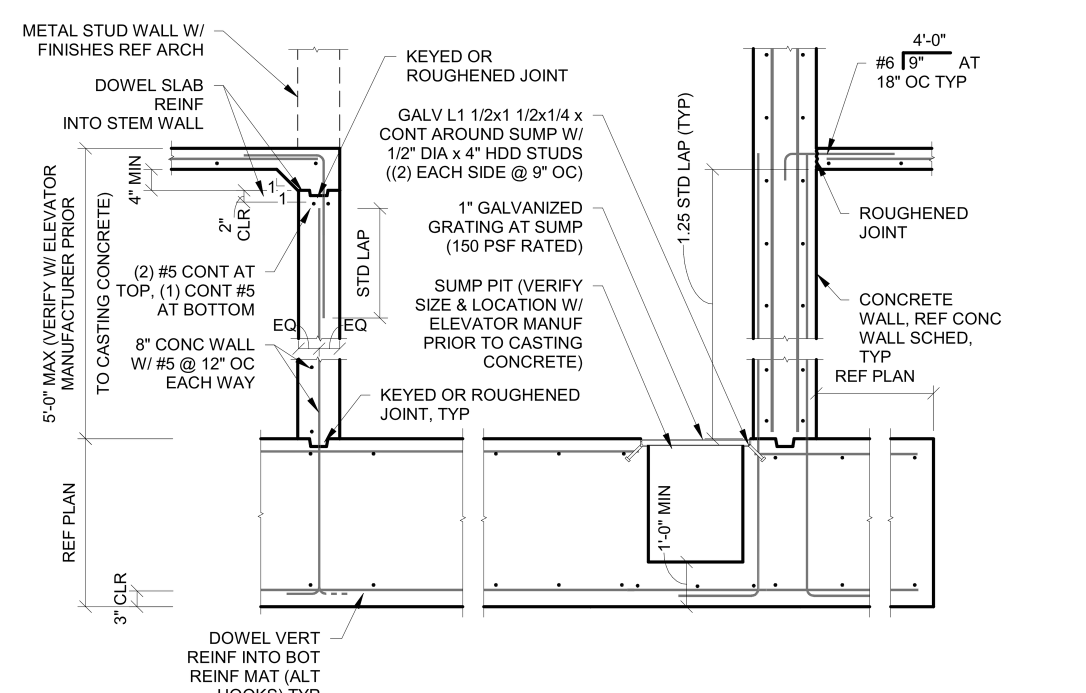

7 ELEVATOR CONCRETE SHEAR WALL TO FOOTING W/ SUMP PIT (S04.01)
1/2" = 1'-0"

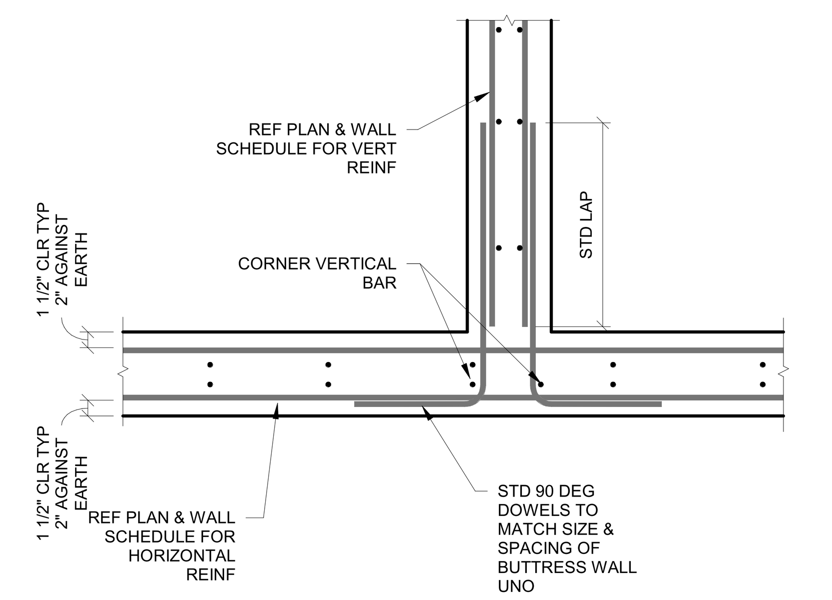

3 CONCRETE WALL CONNECTION AT TEE - 2 LAYER - PLAN VIEW (S04.01)
1" = 1'-0"

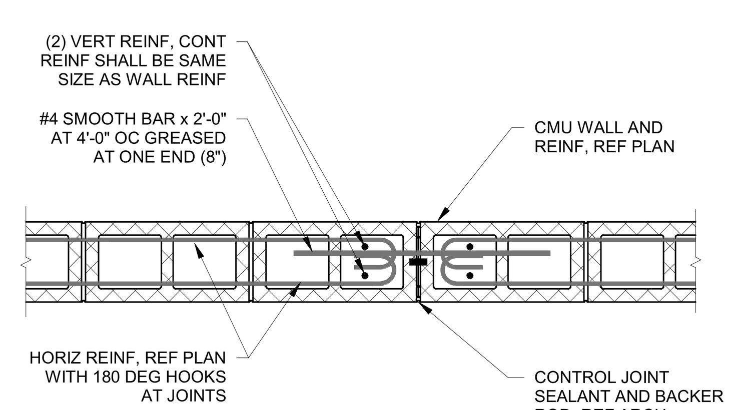

15B CMU - WALL EXPANSION JOINT (S04.01)
1" = 1'-0"

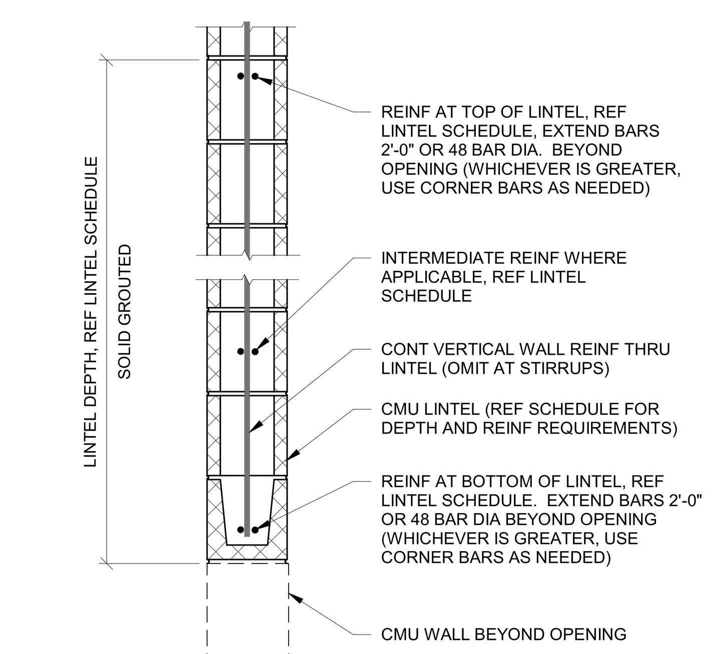

15C CMU LINTEL SECTION (S04.01)
1" = 1'-0"

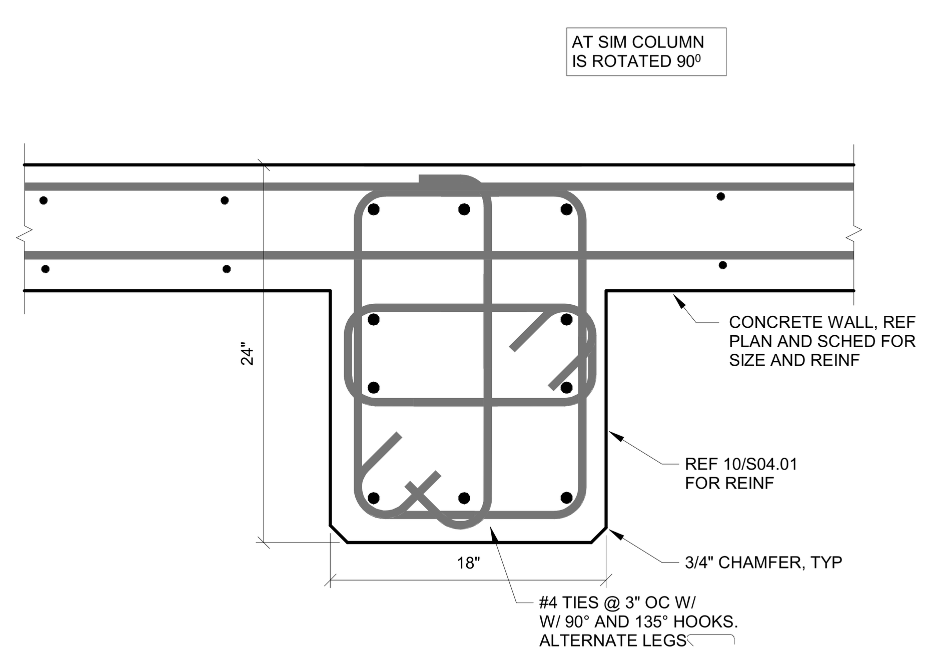

12 INTERIOR CONCRETE PILASTER (S04.01)
1 1/2" = 1'-0"

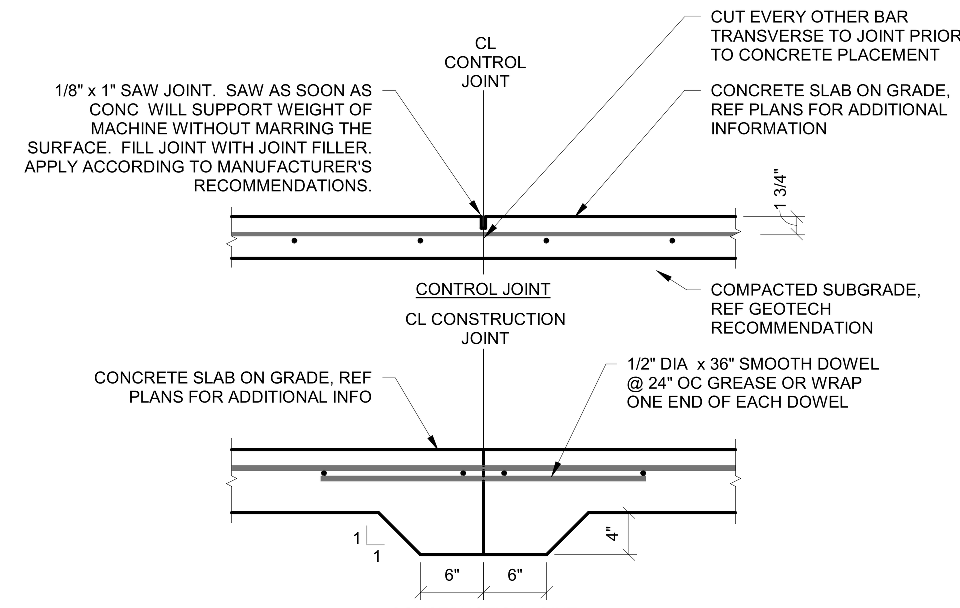

NOTES:
AT 4" SLABS CONTRACTOR MAY USE EITHER CONTROL JOINTS OR CONSTRUCTION JOINTS AT LOCATIONS INDICATED ON PLANS . AT 6" STRUCTURAL SLAB, BARS ARE TO BE CONTINUOUS THROUGH JOINTS

8 SLAB JOINTS (S04.01)
1" = 1'-0"

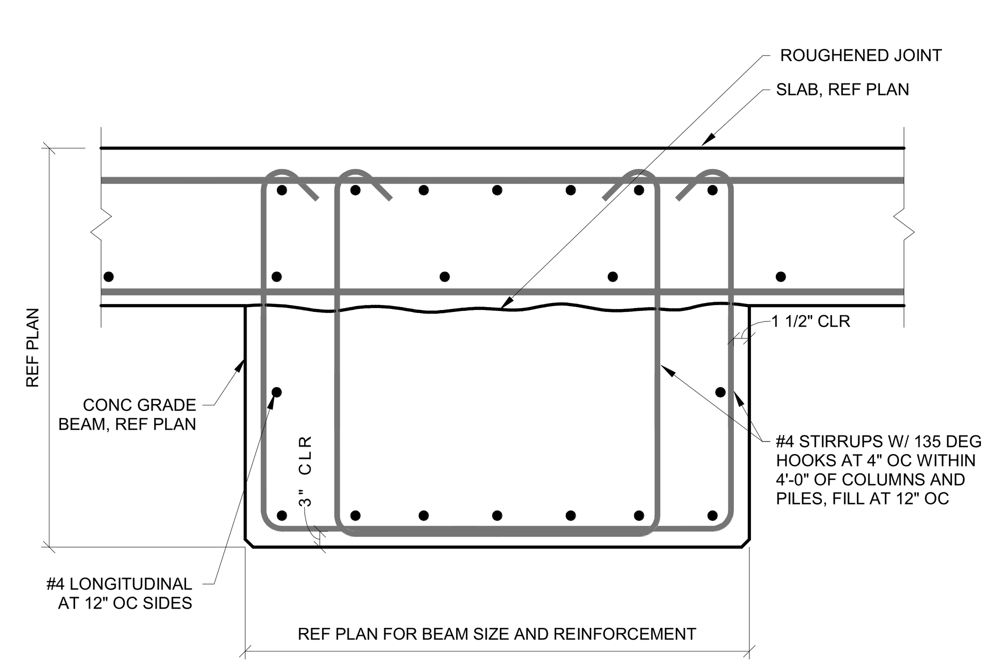

4 GRADE BEAM AT PIT SECTION (S04.01)
1" = 1'-0"

City Of Portland
REVIEWED FOR CODE COMPLIANCE
Date: 02/11/20
Project: 19-106743-REV-01-CO

SERA

ARCHITECTURE
URBAN DESIGN + PLANNING
INTERIOR DESIGN

PORTLAND OREGON 97209
P: 503.445.7372
F: 503.445.7395
SERADESIGN.COM

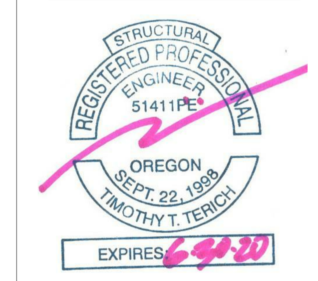

FROELICH ENGINEERS
17700 SW Upper Boones Ferry Rd. Suite #115
Portland, Oregon 97223
503.624.7005
froelich-engineers.com
18-T066

18S
GREYSTAR
1715 SW Salmon St
Portland, OR 97205

REVISIONS

A	PERMIT RESPONSE 1	6/03/2019
B	PERMIT RESPONSE 2	7/26/2019
C	PERMIT RESPONSE 3	9/18/2019
4	AB 02	11/01/2019

CHECKED BY: GRH
ISSUE DATE: 27 SEP 2019
PROJECT NO: 1803002

FOUNDATION DETAILS

S04.01

Construction Set

10/31/2019 12:05:50 PM SERA Design and Architecture, Inc.