© Copyright protected. See Design Agreement. For use on this project only. Unauthorized reproduction of any part of this material is prohibited.

NOTE:
REFER TO ARCHITECT FOR:
1. STAIR DIMENSIONS
2. NOSING REQUIREMENTS
3. STAID FINISHES
4. RISER AND TREAD DIMENSIONS

NOTE:
UPPER HANGERS SHALL BE:
- HU26-3 AT CENTER STRINGERS
- HUS26-2 AT OUTER STRINGERS

LOWER HANGERS SHALL BE:
- HU210-3 AT W/ SLOPED SEAT CENTER STRINGERS
- HUC210-2 AT W/ SLOPED SEAT OUTER STRINGERS

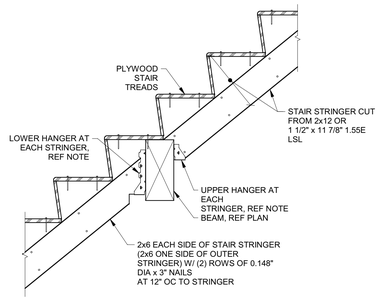

9 S05.03 WOOD STAIR STRINGER TO INTERMEDIATE BEAM
1" = 1'-0"
3

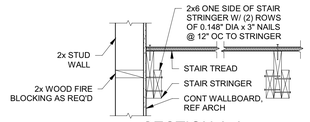

SECTION A-A

NOTE:
REFER TO ARCHITECT FOR:
1. STAIR DIMENSIONS
2. NOSING REQUIREMENTS
3. STAID FINISHES
4. RISER & TREAD DIMENSIONS

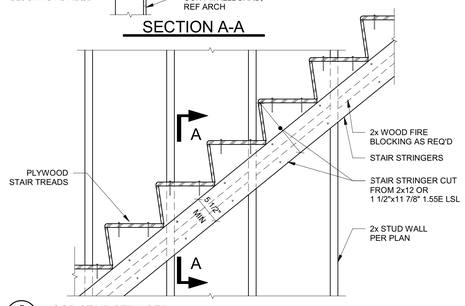

5 S05.03 WOOD STAIR STRINGER
1" = 1'-0"

NOTE:
REFER TO ARCH FOR:
1. STAIR DIMENSIONS
2. NOSING REQUIREMENTS
3. STAIR FINISHES
4. RISER & TREAD DIMENSIONS

NOTE:
HANGERS SHALL BE:
- HU26-3 AT CENTER STRINGERS
- HUC26-2 AT OUTER STRINGERS

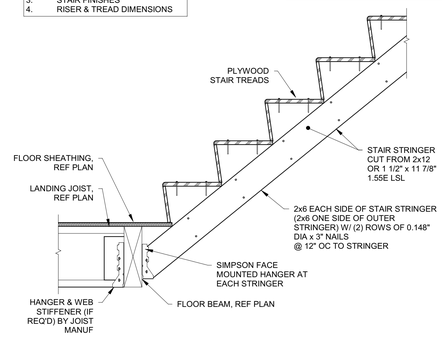

1 S05.03 WOOD STAIR STRINGER TO BEAM
1" = 1'-0"

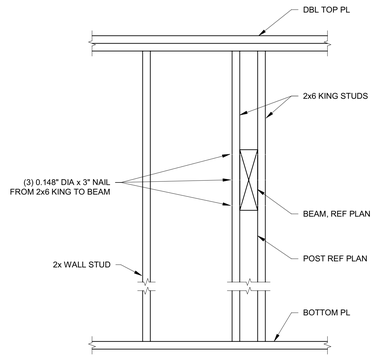

6 S05.03 BEAM POCKET AT STAIRS
1" = 1'-0"

NOTE:
REFER TO ARCH FOR:
1. STAIR DIMENSIONS
2. NOSING REQUIREMENTS
3. STAIR FINISHES
4. RISER & TREAD DIMENSIONS

NOTE:
HANGERS SHALL BE:
- HU210-3 W/ SLOPED SEATS AT CENTER STRINGERS
- HUC210-2 AT W/ SLOPED SEATS OUTER STRINGERS

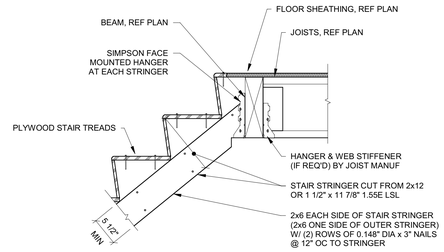

2 S05.03 WOOD STAIR STRINGER TO BEAM
1" = 1'-0"

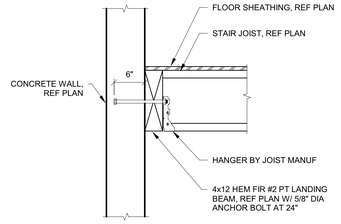

7 S05.03 LANDING BEAM AT CONCRETE WALL
1" = 1'-0"

GRID

NOTE:
REFER TO ARCH FOR:
1. STAIR DIMENSIONS
2. NOSING REQUIREMENTS
3. STAIR FINISHES
4. RISER & TREAD DIMENSIONS

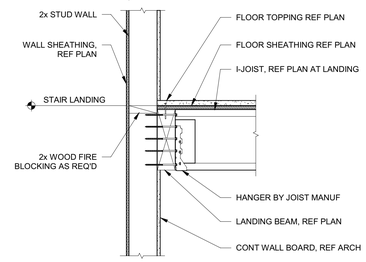

3 S05.03 STAIR LANDING JOIST TO BEAM
1" = 1'-0"

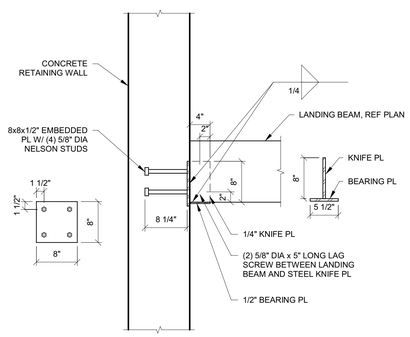

8 S05.03 LANDING BEAM TO CONCRETE WALL CONNECTION
1" = 1'-0"

GRID

NOTE:
REFER TO ARCH FOR:
1. STAIR DIMENSIONS
2. NOSING REQUIREMENTS
3. STAIR FINISHES
4. RISER & TREAD DIMENSIONS

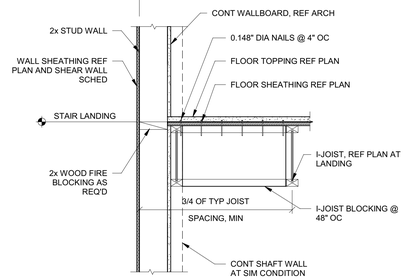

4 S05.03 STAIR LANDING JOIST PARALLEL TO WALL
1" = 1'-0"

City Of Portland
REVIEWED FOR CODE COMPLIANCE
Date: 02/11/20
Project: 19-105743-REV-01-CO

SERA

ARCHITECTURE
URBAN DESIGN + PLANNING
INTERIOR DESIGN

PORTLAND OREGON 97209
P: 503.445.7372
F: 503.445.7395
SERADESIGN.COM

REGISTERED PROFESSIONAL ENGINEER STRUCTURAL 51411PE OREGON SEPT. 22, 1989 TIMOTHY T. TERICH EXPIRES 6-30-20

FROELICH ENGINEERS
17700 SW Upper Boones Ferry Rd. Suite #115
Portland, Oregon 97223
503.624.7005
froelich-engineers.com
18-T066

18S
GREYSTAR
1715 SW Salmon St
Portland, OR 97205

REVISIONS
3 AB 01 9/27/2019

CHECKED BY: GRH
ISSUE DATE: 27 SEP 2019
PROJECT NO: 1803002

STAIR DETAILS
S05.03

Construction Set

10/31/2019 12:06:16 PM SERA Design and Architecture, Inc.