© Copyright protected. See Design Agreement. For use on this project only. Unauthorized reproduction of any part of this material is prohibited.

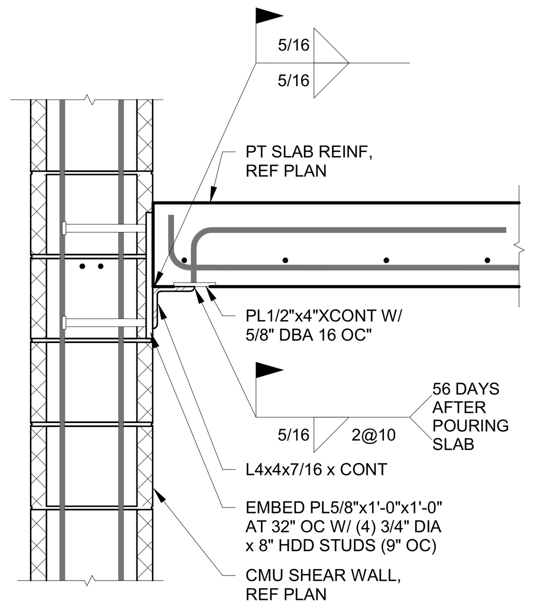

42 S06.03 2ND FLOOR PT SLAB TO CMU SHEAR WALL
1" = 1'-0"

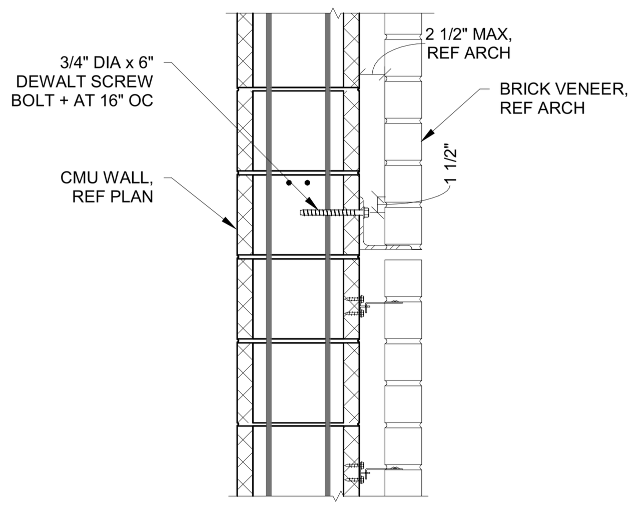

43 S06.03 BRICK VENEER TO CMU WALL CONNECTION
1" = 1'-0"

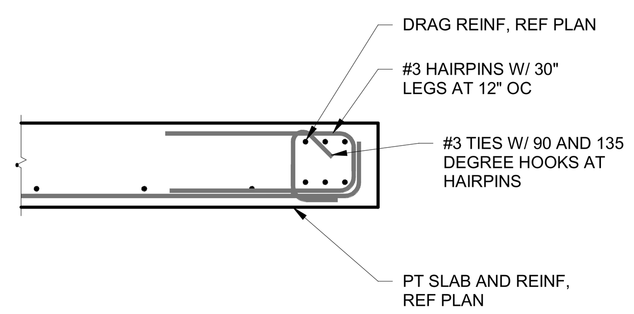

44 S06.03 DRAG BARS AT EDGE OF PT SLAB
1" = 1'-0"

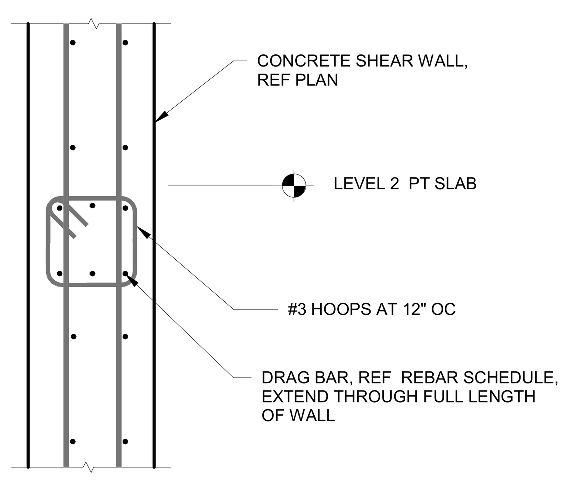

45 S06.03 DRAG BAR AT CONCRETE SHEAR WALL
1" = 1'-0"

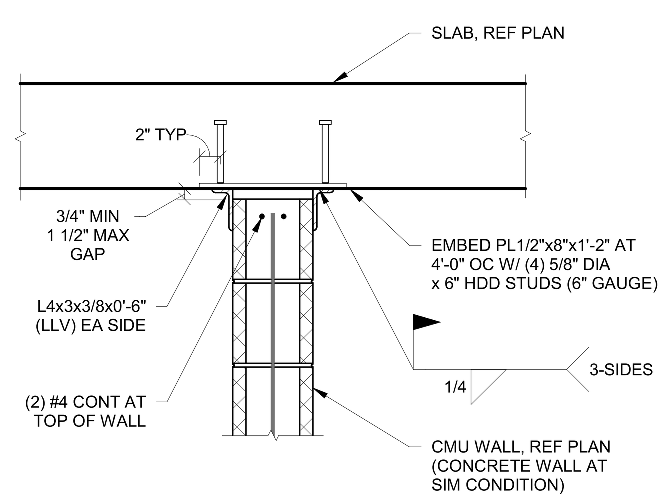

46 S06.03 CMU WALL TO PT SLAB
1" = 1'-0"

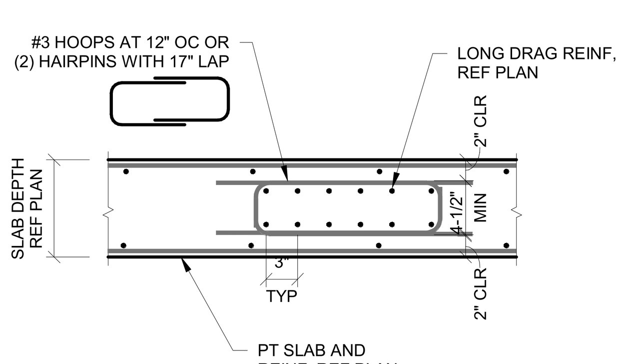

47 S06.03 DRAG BARS IN PT SLAB
1" = 1'-0"

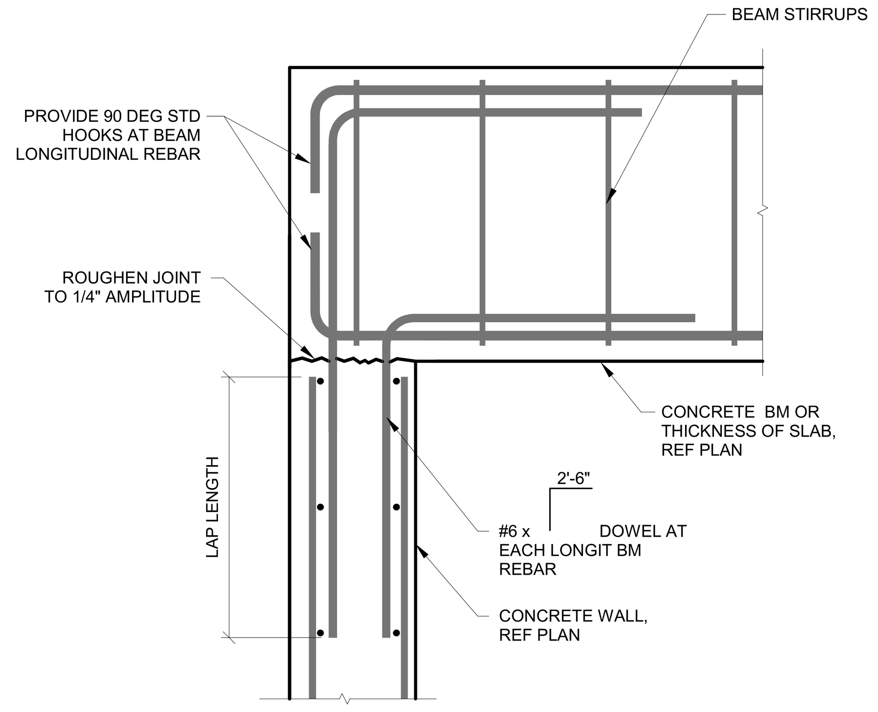

38 S06.03 CONCRETE BEAM OR THICKENED SLAB TO CONCRETE WALL
1" = 1'-0"

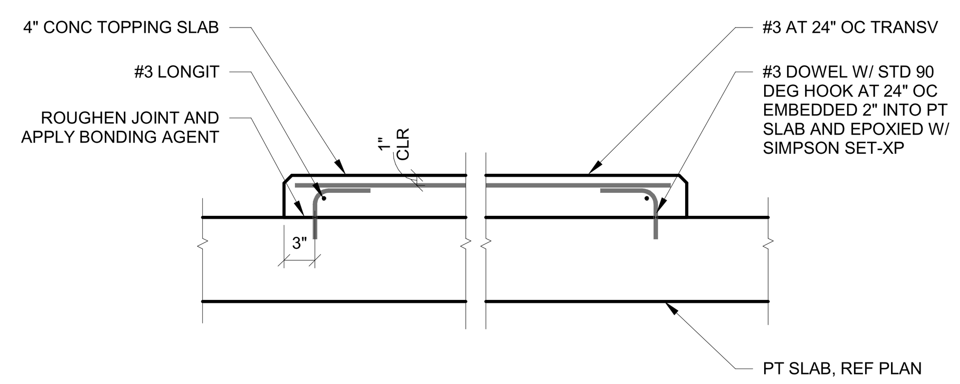

39 S06.03 TOPPING SLAB ON PT SLAB
1" = 1'-0"

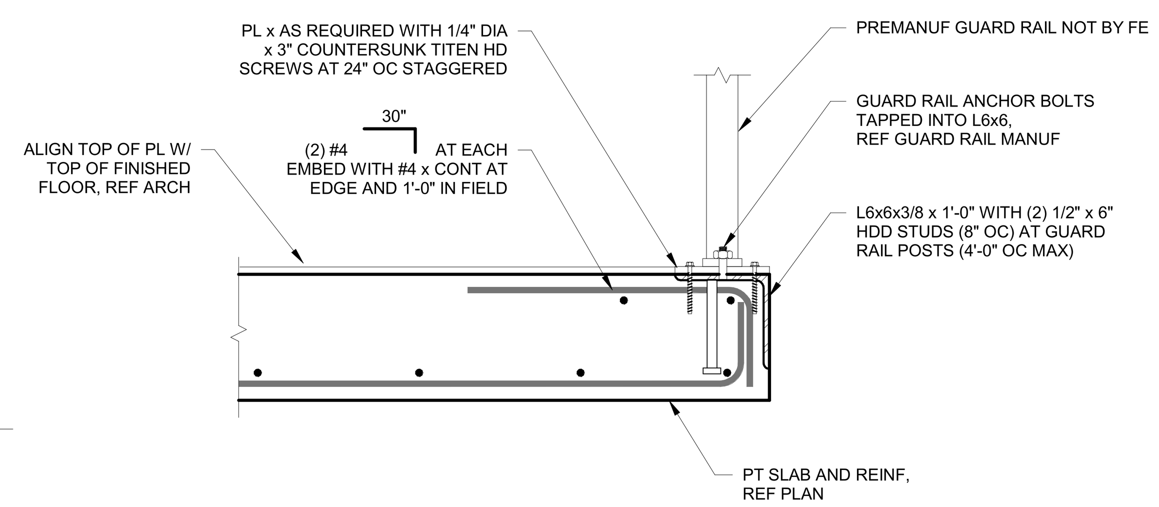

40A S06.03 GUARD RAIL
1 1/2" = 1'-0"

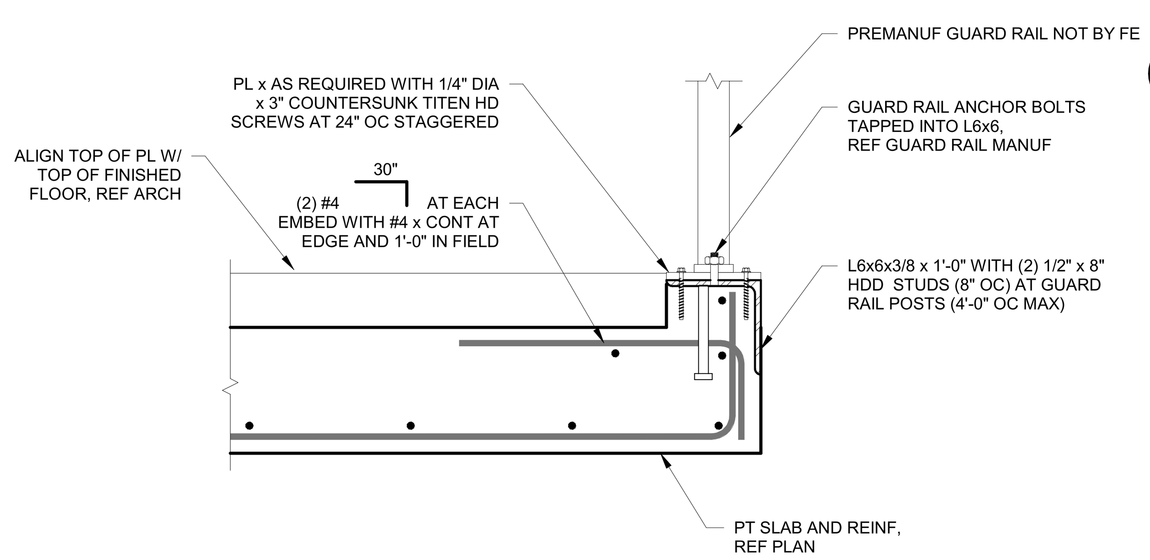

40B S06.03 GUARD RAIL CONNECTION AT AMENITY SPACE
1 1/2" = 1'-0"

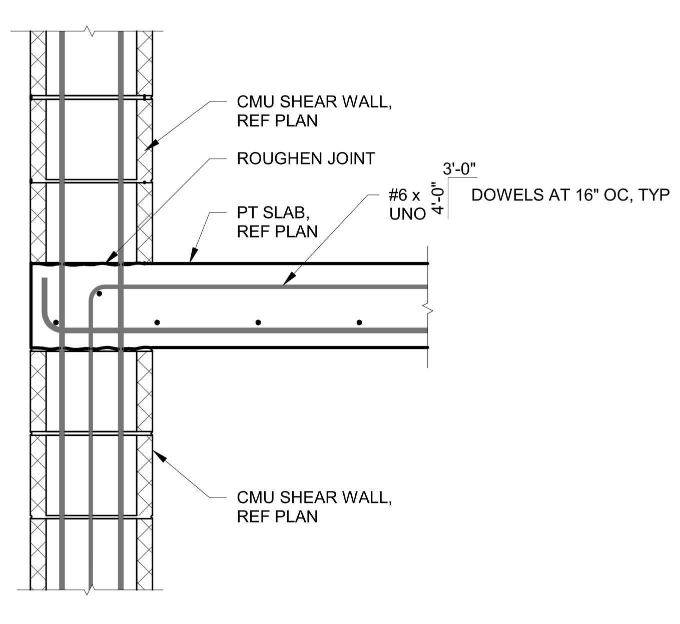

41 S06.03 3RD FLOOR PT SLAB TO CMU SHEAR WALL
1" = 1'-0"

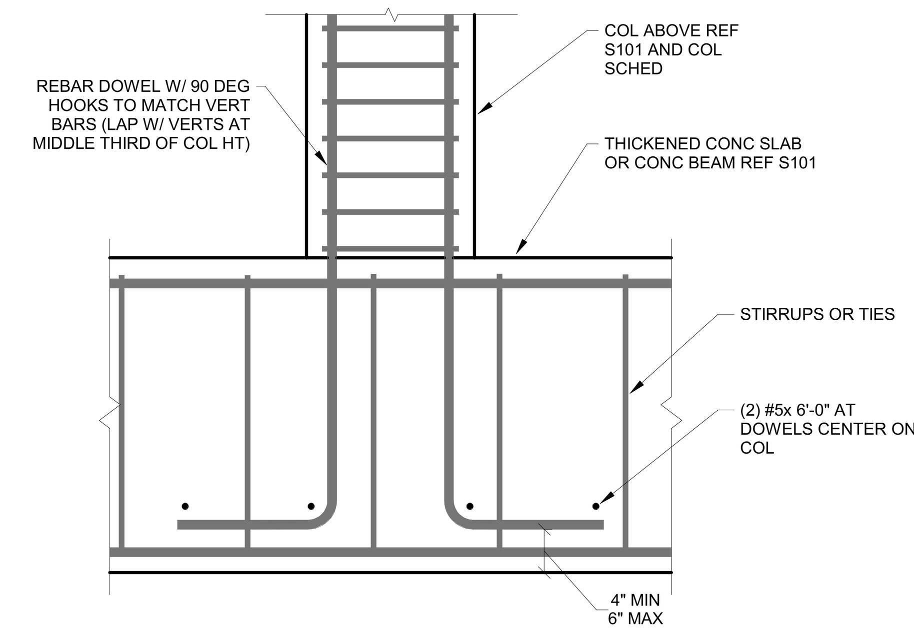

33 S06.03 CONCRETE COLUMN TO CONCRETE BEAM
1" = 1'-0"

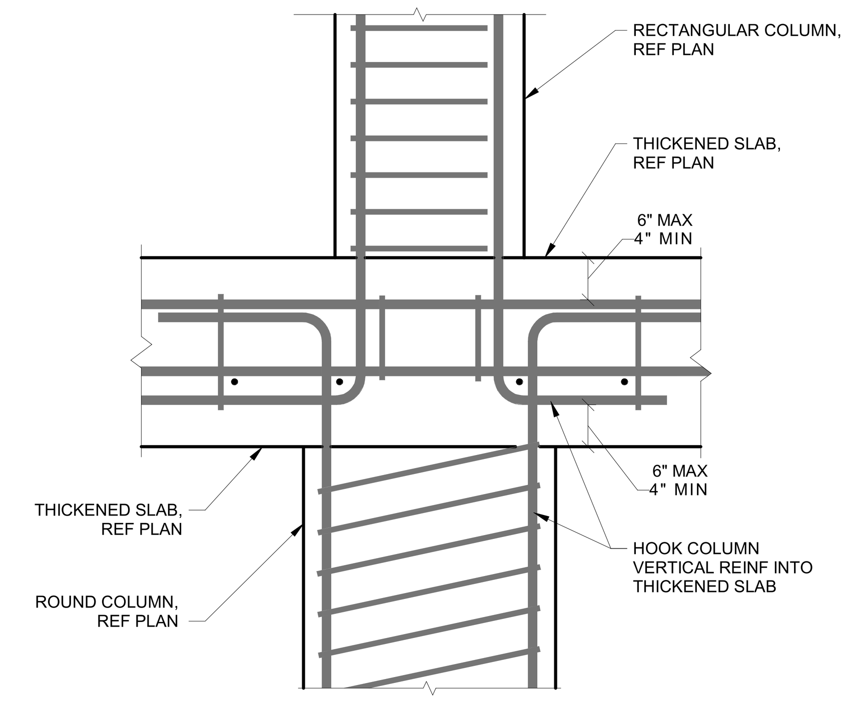

34 S06.03 ROUND TO RECTANGULAR COLUMN TRANSITION
1" = 1'-0"

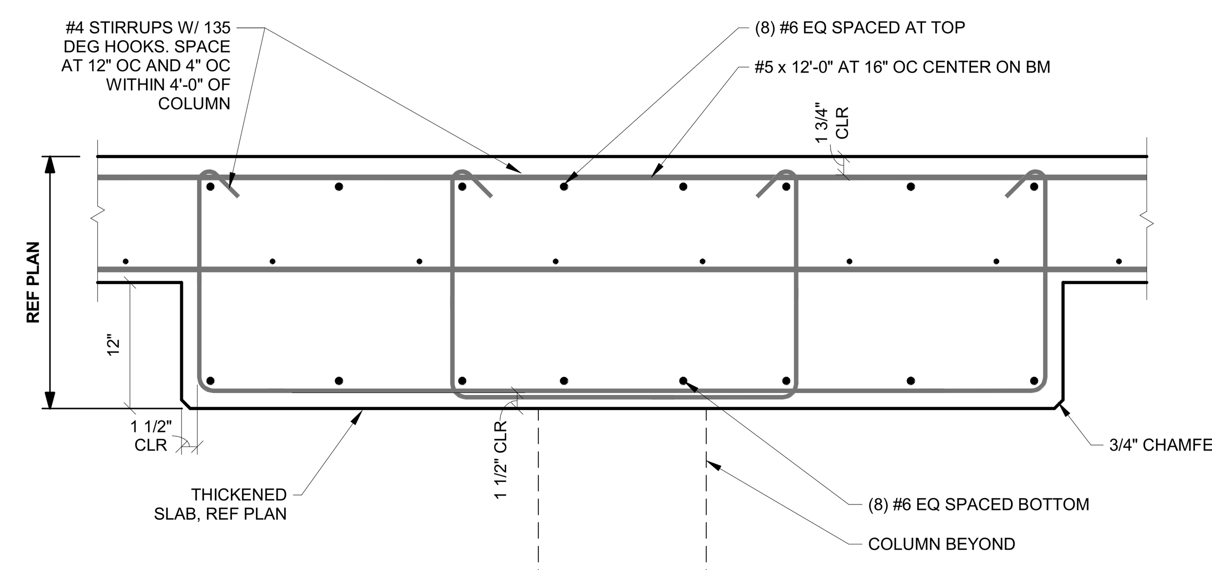

35 S06.03 THICKENED SLAB BEAM
1" = 1'-0"

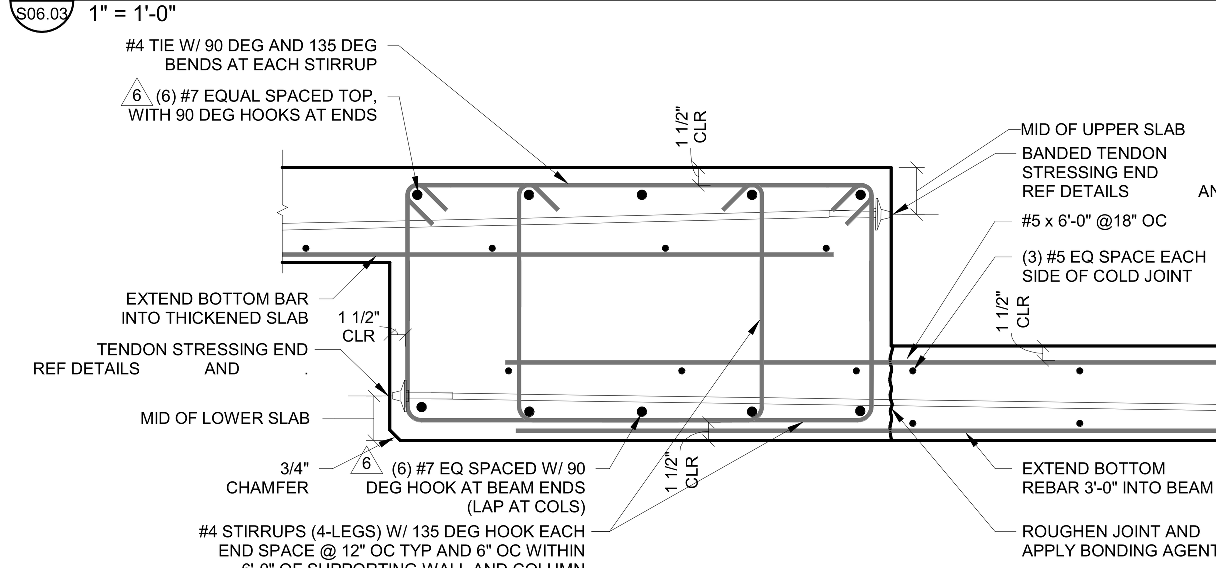

36 S06.03 CONCRETE SLAB STEP
1" = 1'-0"

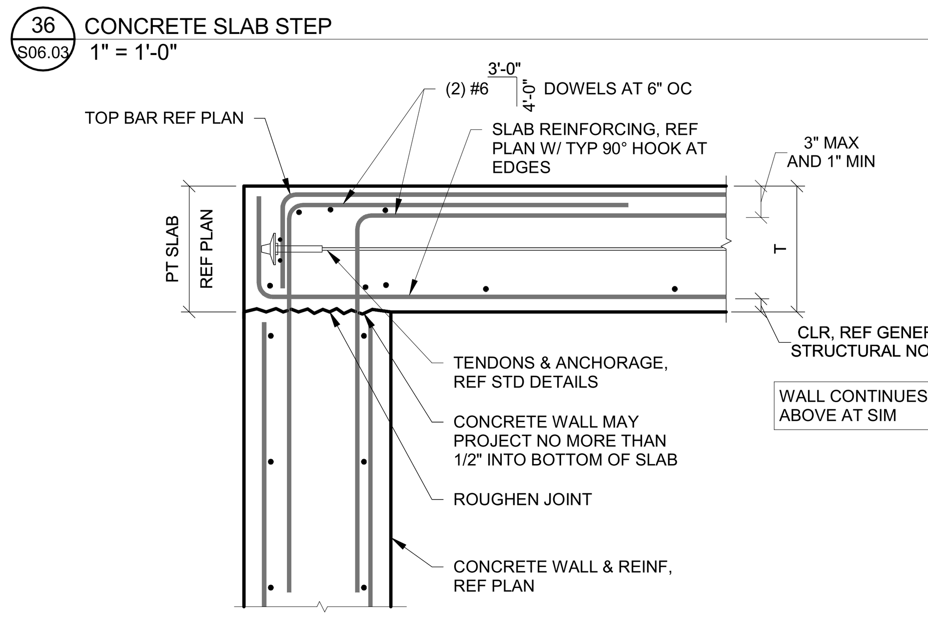

37 S06.03 HIGH LOAD PT CONCRETE SLAB TO CONCRETE WALL
1" = 1'-0"

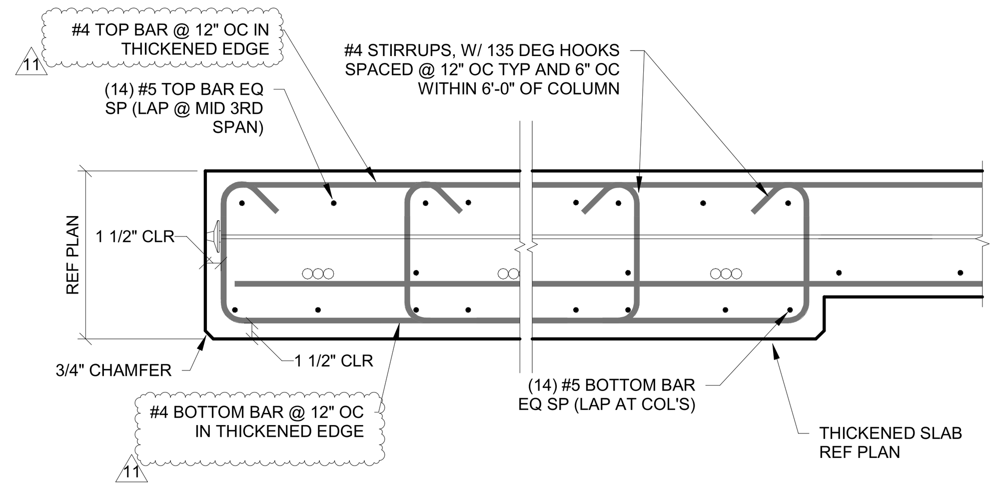

29 S06.03 THICKENED SLAB AT EDGE
1" = 1'-0"

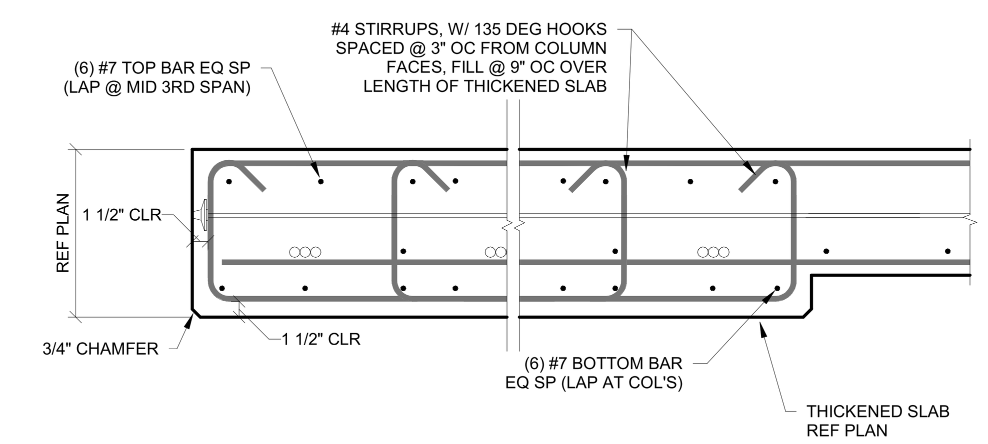

30 S06.03 THICKENED SLAB AT EDGE
1" = 1'-0"

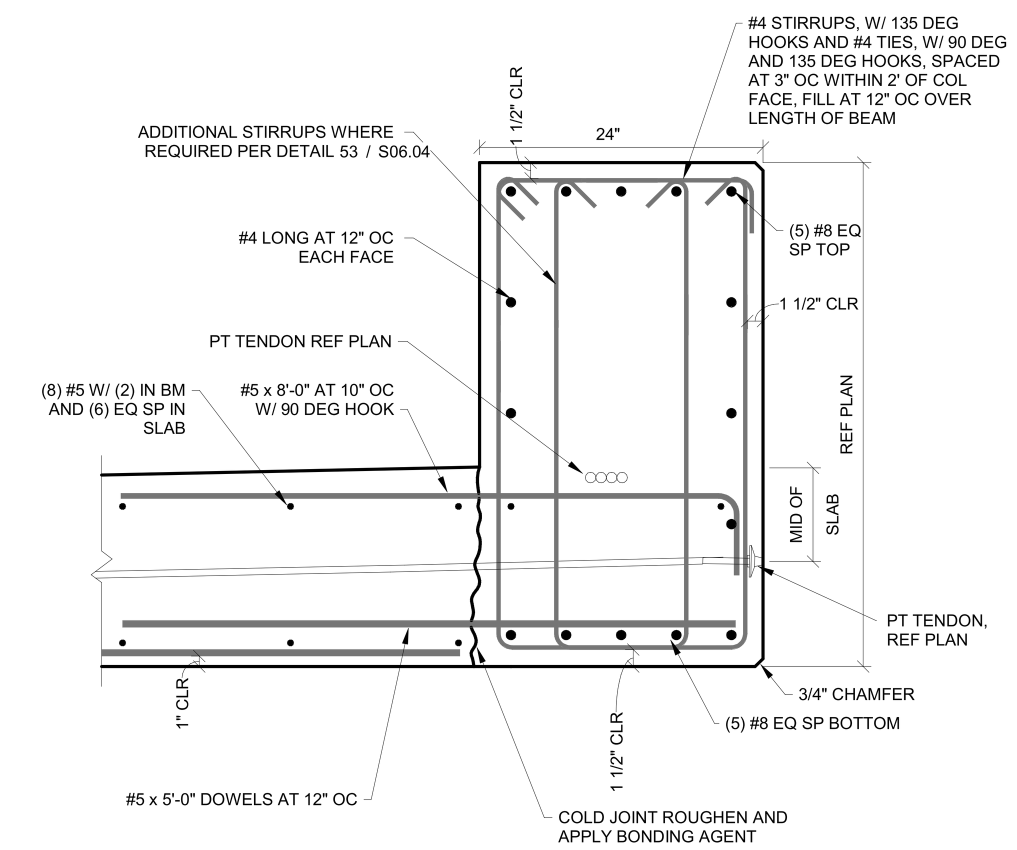

31 S06.03 CONCRETE BEAM
1" = 1'-0"

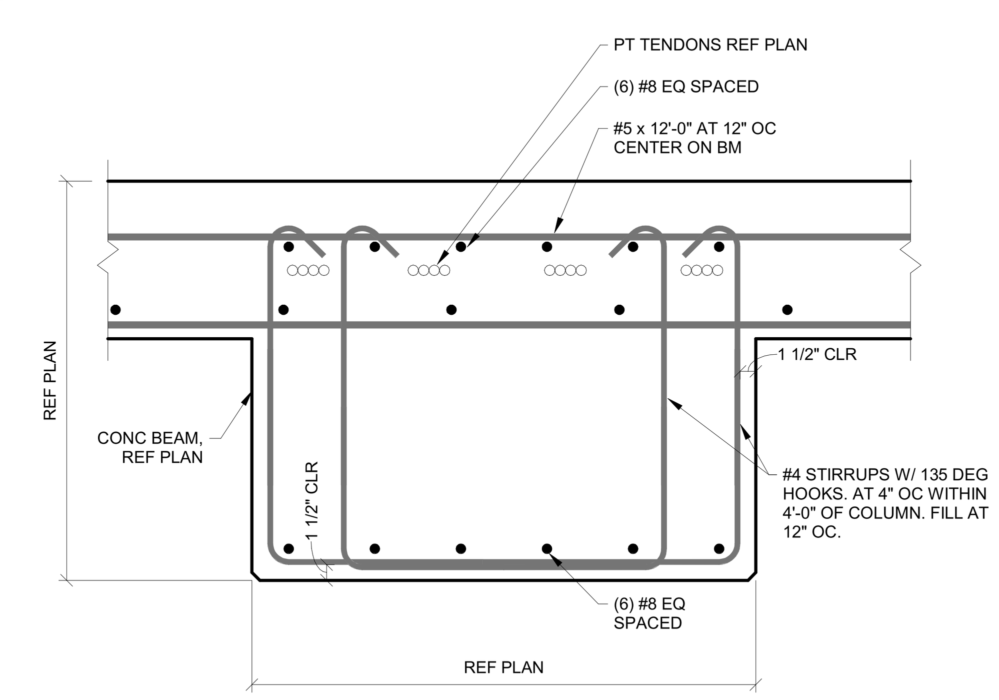

32 S06.03 4'-0" WIDE BEAM AT COURTYARD SLAB
1" = 1'-0"

City Of Portland
REVIEWED FOR CODE COMPLIANCE
Date: 02/11/20
Project: 19-106743-REV-01-CO

SERA

ARCHITECTURE
URBAN DESIGN + PLANNING
INTERIOR DESIGN

PORTLAND OREGON 97209
P: 503.445.7372
F: 503.445.7395
SERADESIGN.COM

STRUCTURAL REGISTERED PROFESSIONAL ENGINEER 51411PE OREGON SEPT. 22, 1998 TIMOTHY T. TERICH EXPIRES: 6-30-20

FROELICH ENGINEERS
17700 SW Upper Boones Ferry Rd. Suite #115
Portland, Oregon 97223
503.624.7005
froelich-engineers.com
18-T066

18S
GREYSTAR
1715 SW Salmon St
Portland, OR 97205

REVISIONS

1	ADDENDUM 1	5/3/2019
2	ADDENDUM 2	5/9/2019
A	PERMIT RESPONSE 1	6/03/2019
B	PERMIT RESPONSE 2	7/26/2019
6	AB 06	01/07/2020
11	AB-08	02/07/2020

CHECKED BY: GRH
ISSUE DATE: 27 SEP 2019
PROJECT NO: 1803002

PT CONCRETE DETAILS

S06.03

Construction Set

SERA Design and Architecture, Inc.

2/7/2020 1:18:32 PM