© Copyright protected. See Design Agreement. For use on this project only. Unauthorized reproduction of any part of this material is prohibited.

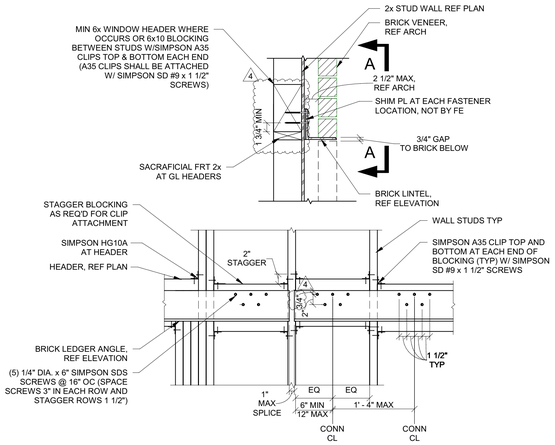

13 S06.20 BRICK LEDGER ANGLE TO WOOD FRAMING
1" = 1'-0"

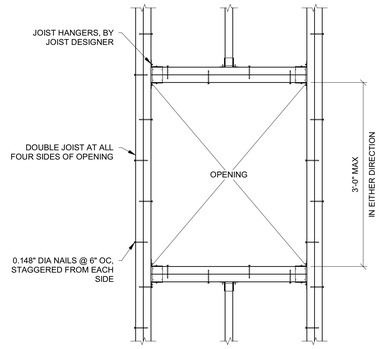

9 S06.20 FLOOR FRAMING AT TYPICAL OPENING
1" = 1'-0"

NOTES:
1. "W" INDICATES WIDTH OR DEPTH OF MEMBER
2. ALL HOLES SHALL BE DRILLED, NOT SAWN
3. ALL NOTCHES TO HAVE CORNERS PRE-DRILLED. OVERCUTS WILL NOT BE ALLOWED

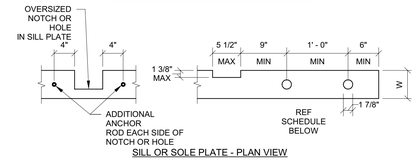

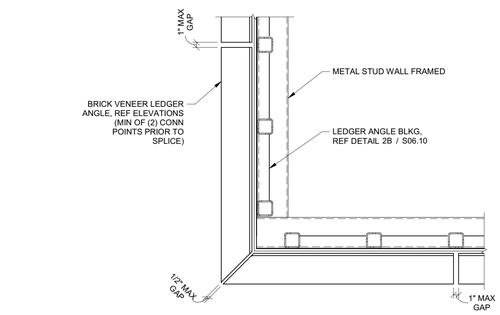

14 S06.20 BRICK LEDGER ANGLE OUTSIDE CORNER CFS - PLAN VIEW
1" = 1'-0"

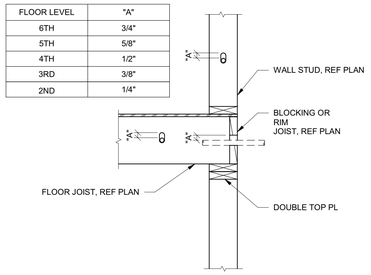

10 S06.20 TYPICAL OVERSIZED HOLE FOR WOOD SHRINKAGE
1" = 1'-0"

NOTES:
1. "A" DENOTES CLEAR DISTANCE FROM TOP OF PIPE TO TOP OF PENETRATION.
2. DEPTH "A" IS BASED UP ON A MAX MOISTURE CONTENT OF 19% AT TIME OF INSTALLATION OF PLUMBING.
3. HOLE DIAMETER = "A" SHALL NOT EXCEED ALLOWABLE HOLE SIZES IN STRUCTURAL MEMBERS SHOWN IN DETAIL 6 / S06.20
4. LOCATION OF HOLES IN STRUCTURAL MEMBERS (STUDS,JOISTS,BLOCKS,ETC.) SHALL BE REF 6 / S06.20ND GENERAL STRUCTURAL NOTES.

FLOOR LEVEL	"A"
6TH	3/4"
5TH	5/8"
4TH	1/2"
3RD	3/8"
2ND	1/4"

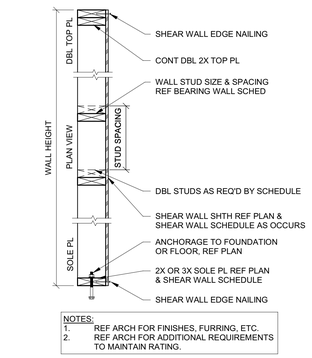

NOTES:
1. REF ARCH FOR FINISHES, FURRING, ETC.
2. REF ARCH FOR ADDITIONAL REQUIREMENTS TO MAINTAIN RATING.

TYPICAL WALL CONSTRUCTION

NOTES:
1. REF PLAN & SCHEDULE FOR WALL TYPE.
2. STUDS SHALL BE MAINTAINED IN VERTICAL ALIGNMENT FROM FLOOR TO FLOOR.

7 S06.20 BEARING WALL CONSTRUCTION
1" = 1'-0"

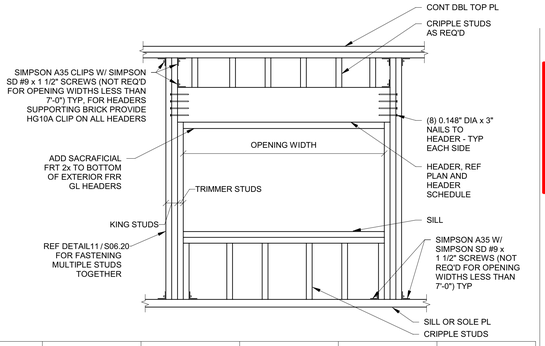

EXTERIOR HEADER TYPE	8TH FLOOR	7TH FLOOR	6TH FLOOR	5TH FLOOR	4TH FLOOR
FRT 4x10 DF#2	TRIMMER: (2) 2x6 DF #2 KING: (2) 2x6 DF #2	TRIMMER: (3) 2x6 DF #2 KING: (2) 2x6 DF #2	TRIMMER: (3) 2x6 DF #2 KING: (2) 2x6 DF #2	TRIMMER: (3) 2x6 DF #2 KING: (2) 2x6 DF #2	TRIMMER: (3) 2x6 DF #2 KING: (2) 2x6 DF #2
FRT 6x10 DF #1	TRIMMER: (2) 2x6 DF #2 KING: (2) 2x6 DF #2	TRIMMER: (3) 2x6 DF #2 KING: (2) 2x6 DF #2	TRIMMER: (3) 2x6 DF #2 KING: (2) 2x6 DF #2	TRIMMER: (4) 2x6 DF #2 KING: (2) 2x6 DF #2	TRIMMER: (4) 2x6 DF #2 KING: (2) 2x6 DF #2
FRT 6x12 DF #1	TRIMMER: (2) 2x6 DF #2 KING: (2) 2x6 DF #2	TRIMMER: (3) 2x6 DF #2 KING: (2) 2x6 DF #2	TRIMMER: (4) 2x6 DF #2 KING: (2) 2x6 DF #2	TRIMMER: (4) 2x6 DF #2 KING: (2) 2x6 DF #2	TRIMMER: (4) 2x6 DF #2 KING: (2) 2x6 DF #2
5 1/2" x 13 1/2" GL	TRIMMER: (2) 2x6 DF #2 KING: (3) 2x6 DF #2	TRIMMER: (3) 2x6 DF #2 KING: (3) 2x6 DF #2	TRIMMER: (3) 2x6 DF #2 KING: (3) 2x6 DF #2	TRIMMER: (3) 2x6 DF #2 KING: (3) 2x6 DF #2	TRIMMER: (4) 2x6 DF #2 KING: (3) 2x6 DF #2
5 1/2" x 15" GL	TRIMMER: (2) 2x6 DF #2 KING: (3) 2x6 DF #2	TRIMMER: (3) 2x6 DF #2 KING: (3) 2x6 DF #2	TRIMMER: (4) 2x6 DF #2 KING: (3) 2x6 DF #2	TRIMMER: (5) 2x6 DF #2 KING: (3) 2x6 DF #2	TRIMMER: (5) 2x6 DF #2 KING: (3) 2x6 DF #2

1 S06.20 WINDOW / DOOR HEADER DETAIL
1" = 1'-0"

NOTE:
DO NOT INSTALL NON-BEARING PARTITIONS UNTIL FLOOR DEAD LOAD IS IN PLACE.

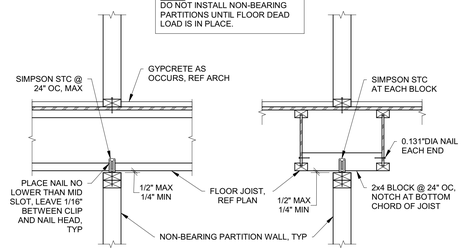

2 S06.20 NON-BEARING PATITION WALLS AT FLOOR
1" = 1'-0"

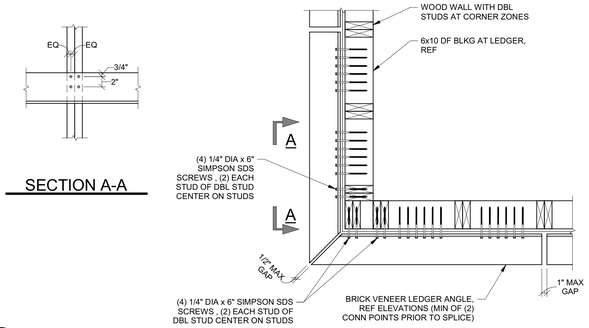

15 S06.20 BRICK LEDGER ANGLE OUTSIDE CORNER - PLAN VIEW
1" = 1'-0"

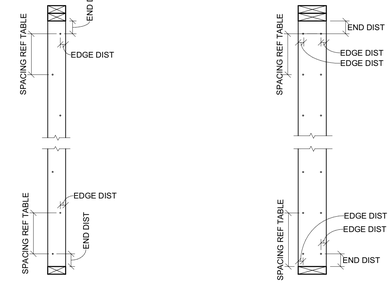

BUILT-UP MEMBER	FASTENER SIZE	FASTENER SPACING	FASTENER END DIST	FASTENER EDGE DIST	ROWS OF FASTENERS
(2) 2x4	0.148" DIA x 3" NAIL	8"	2.5"	1"-1.5"	1 - STAGGER
(3) 2x4	0.148" DIA x 4 1/2" NAIL	8"	2.5"	1"-1.5"	1 - STAGGER
(4) OR MORE 2x4	1/2" DIA BOLT	9"	4"	1.5"	1 - STAGGER
(2) 2x6	0.148" x 3" NAIL	8"	2.5"	1"-1.5"	2
(3) 2x6	0.148" DIA x 4 1/2" NAIL	8"	2.5"	1"-1.5"	2
(4) OR MORE 2x6	1/2" DIA BOLT	9"	4"	1.25"	2

NOTES:
1. WALL SHEATHING OR GYP BOARD FASTENERS SHALL BE STAGGERED TO EACH STUD IN BUILT-UP MEMBER.
2. NAILS AND SCREWS SHALL BE INSTALLED FROM ALTERNATING FACES OF THE BUILT-UP MEMBER.
3. BOLTS SHALL HAVE STANDARD CUT WASHERS BETWEEN WOOD AND BOLT HEAD AND NUT HEAD.
4. FASTENERS SHALL BE SUFFICIENTLY DRIVEN (OR TIGHTENED) TO ENSURE ALL WOOD LAMINATIONS ARE IN FULL CONTACT.
5. 0.220" DIA SIMPSON SDWS SCREWS OF SAME LENGTH MAY BE SUBSTITUTED FOR NAILS W/ 9" SPACING AND 4" END DIST. AS PER FOOTNOTE 2. SCREWS SHALL BE INSTALLED FROM ALTERNATING FACES OF THE BUILT-UP MEMBER.

11 S06.20 BUILT-UP WOOD POSTS
1" = 1'-0"

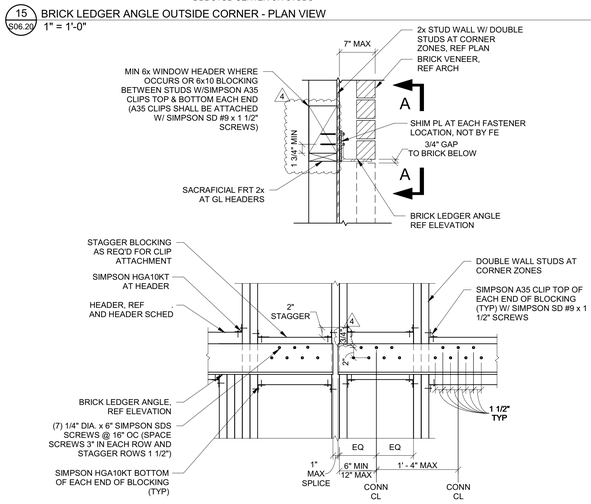

16 S06.20 BRICK LEDGER CONNECTION - WOOD FRAME - CORNER ZONE
1" = 1'-0"

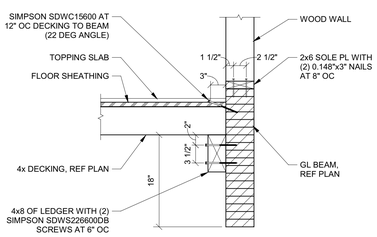

12 S06.20 FLOOR DECKING TO SIDE OF BEAM
1" = 1'-0"

NOTE: USE EDGE NAILING AT ALL INTERIOR SHEAR WALLS AND DRAG STRUTS, UNO

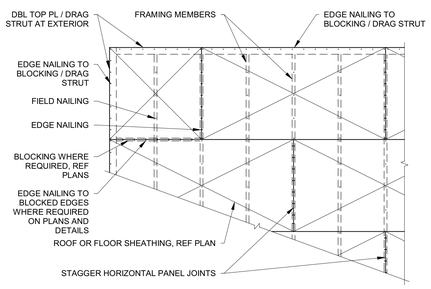

8 S06.20 PLYWOOD FLOOR OR ROOF DIAPHRAGM
3/8" = 1'-0"

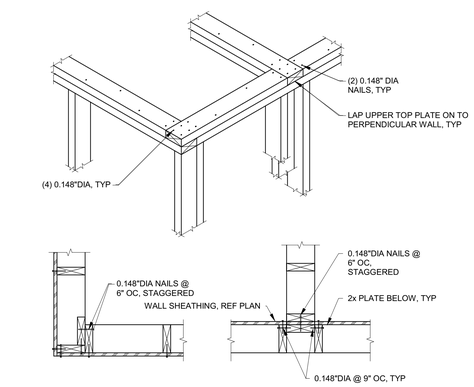

5 S06.20 WALL FRAMING AT CORNERS AND INTERSECTIONS
1" = 1'-0"

3 S06.20 NOT USED
1" = 1'-0"

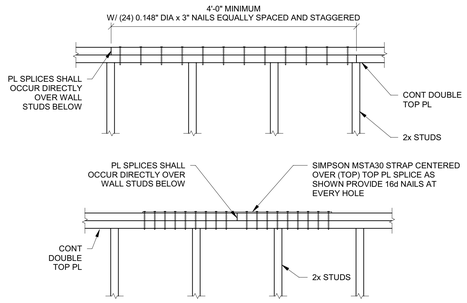

4 S06.20 TOP PLATE SPLICE DETAIL
1" = 1'-0"

City Of Portland
REVIEWED FOR CODE COMPLIANCE
Date: 02/11/20
Project: 19-105743-REV-01-CO

SERA

ARCHITECTURE
URBAN DESIGN + PLANNING
INTERIOR DESIGN

PORTLAND OREGON 97209
P: 503.445.7372
F: 503.445.7395
SERADESIGN.COM

STRUCTURAL REGISTERED PROFESSIONAL ENGINEER 51411PE OREGON SEPT. 22, 1989 TIMOTHY T. TERICH EXPIRES 6-30-20

FROELICH ENGINEERS
17700 SW Upper Boones Ferry Rd. Suite #115
Portland, Oregon 97223
503.624.7005
froelich-engineers.com
18-T066

18S
GREYSTAR
1715 SW Salmon St
Portland, OR 97205

REVISIONS

1	ADDENDUM 1	5/3/2019
A	PERMIT RESPONSE 1	6/03/2019
C	PERMIT RESPONSE 3	9/18/2019
4	AB 02	11/01/2019

CHECKED BY:	TTT
ISSUE DATE:	27 SEP 2019
PROJECT NO:	1803002

WOOD DETAILS
S06.20

Construction Set

10/31/2019 12:07:09 PM SERA Design and Architecture, Inc.