© Copyright protected. See Design Agreement. For use on this project only. Unauthorized reproduction of any part of this material is prohibited.

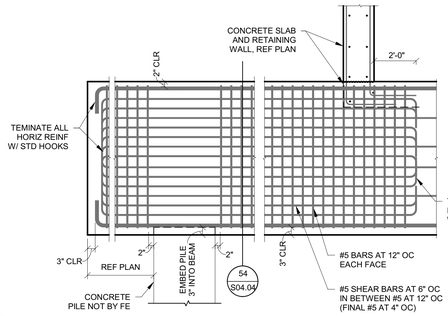

53 S04.04 CONCRETE BEAM
1/2" = 1'-0"

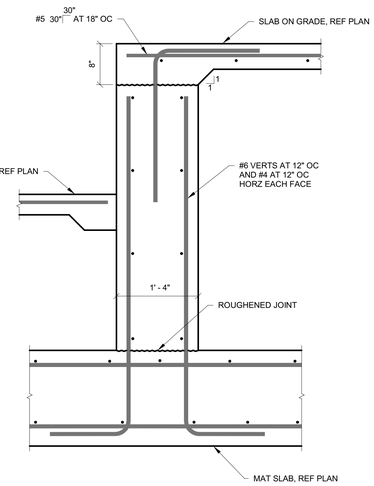

50 S04.04 SLAB STEP AT STAIR/ELEV CORE
1" = 1'-0"

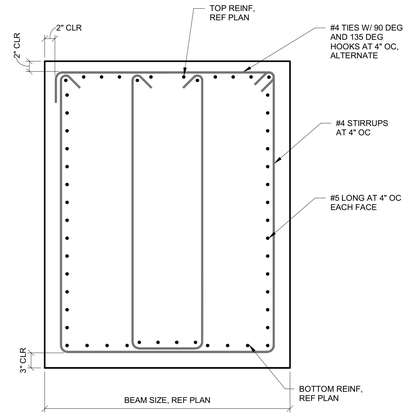

54 S04.04 TYPE 5 GRADE BEAM SECTION OUT OF PIT
1" = 1'-0"

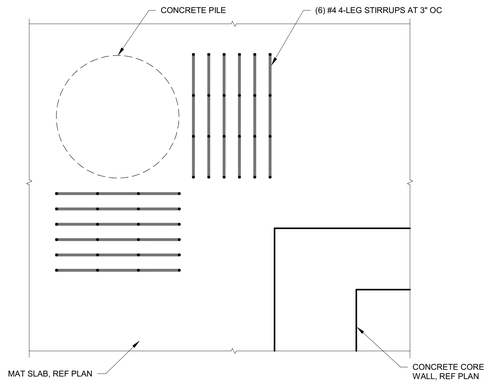

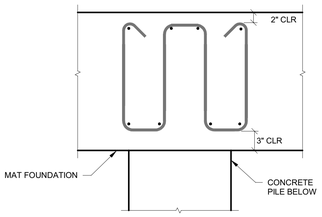

4-LEG STIRRUP

51 S04.04 FOUNDATION MAT STIRRUPS
1" = 1'-0"

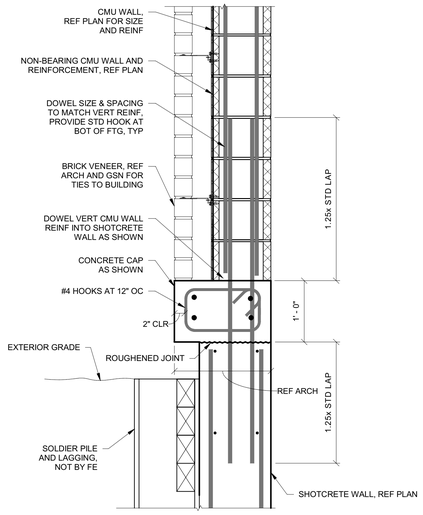

46 S04.04 BRICK VENEER AT SHOTCRETE WALL
1" = 1'-0"

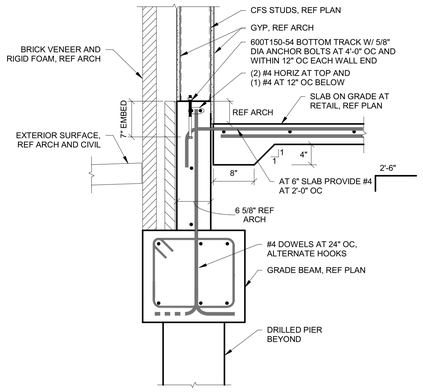

42 S04.04 BRICK VENEER TO GRADE BEAM
1" = 1'-0"

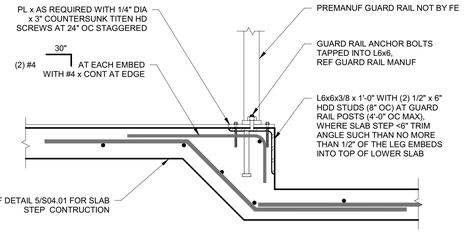

47 S04.04 GUARD RAIL AT SLAB ON GRADE
1 1/2" = 1'-0"

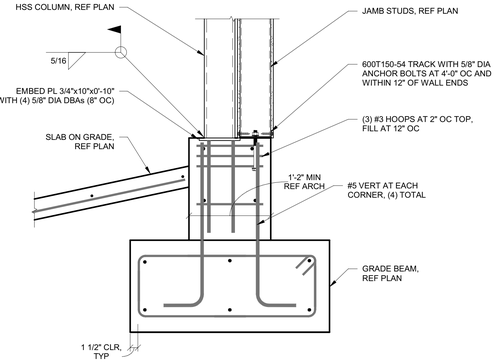

5 S04.04 43 S04.04 PEDESTAL AT GARAGE DOOR
1" = 1'-0"

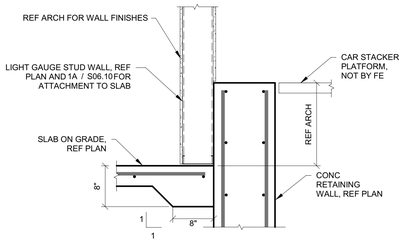

55 S04.04 RETAINING WALL AT WEST SIDE OF NORTH PIT
1" = 1'-0"

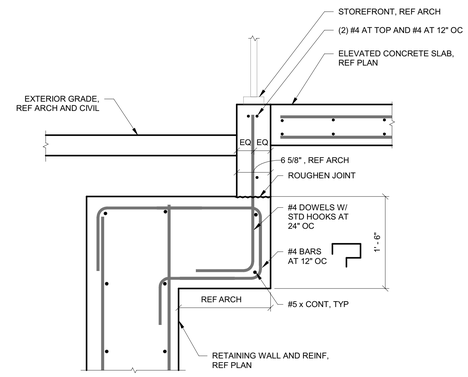

48 S04.04 STEM WALL JOG AT ELECTRICAL ROOM
1" = 1'-0"

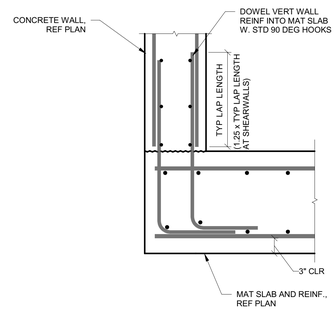

44 S04.04 CONCRETE WALL AT MAT SLAB
1" = 1'-0"

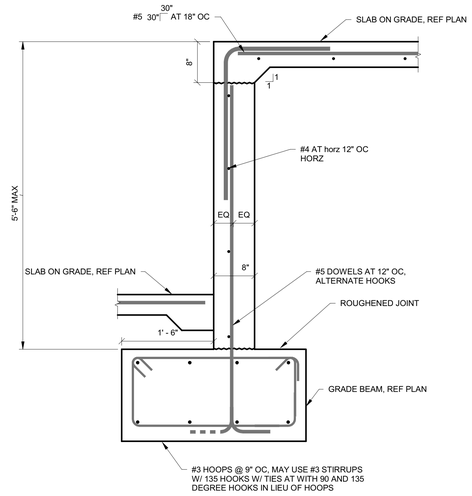

3 S04.04 56 S04.04 INTERIOR RETAINING WALL
1" = 1'-0"

90 DEG AND 135 DEG STIRRUP AND TIE HOOKS

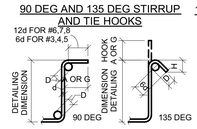

135 DEG SEISMIC STIRRUP / TIE HOOKS

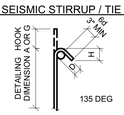

RECOMMENDED END HOOKS

ALL GRADES OF STEEL
D = FINISHED BEND DIAMETER

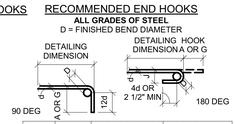

STIRRUP (TIES SIMILAR) STIRRUP AND TIE HOOK DIMENSIONS
ALL GRADES OF STEEL

BAR SIZE	D (IN)	90 DEG HOOK (IN)	135 DEG HOOK (IN)	
		A OR G	A OR G	H (APPROX.)
#3	1 1/2	0-4	4 1/4	3
#4	2	0-4 1/2	4 1/2	3
#5	2 1/2	0-6	5 1/2	3 3/4

135 DEG SEISMIC STIRRUP / TIE HOOKS
ALL GRADES OF STEEL

BAR SIZE	D (IN)	135 DEG HOOK (IN)	
		A OR G	H (APPROX)
#3	1 1/2	4 1/4	3
#4	2	4 1/2	3
#5	2 1/2	5 1/2	3 3/4

BAR SIZE	D (IN)	180 DEG HOOKS, FT - IN		90 DEG HOOKS FT - IN
		A OR G	J	A OR G
#3	2 1/4	0-5	0-3	0-6
#4	3	0-6	0-4	0-8
#5	3 3/4	0-7	0-5	0-10
#6	4 1/2	0-8	0-6	1-0
#7	5 1/4	0-10	0-7	1-2
#8	6	0-11	0-8	1-4
#9	9 1/2	1-3	0-11 3/4	1-7
#10	10 3/4	1-5	1-1 1/4	1-10
#11	12	1-7	1-2 3/4	2-0
#12	18 1/4	2-3	1-9 3/4	2-7

52 S04.04 REBAR HOOK DETAILS
3/8" = 1'-0"

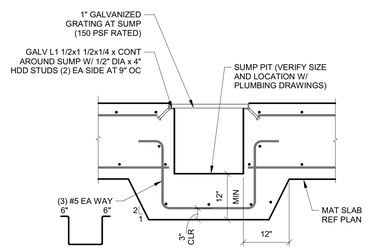

49 S04.04 SUMP AT PARKING PIT
3/4" = 1'-0"

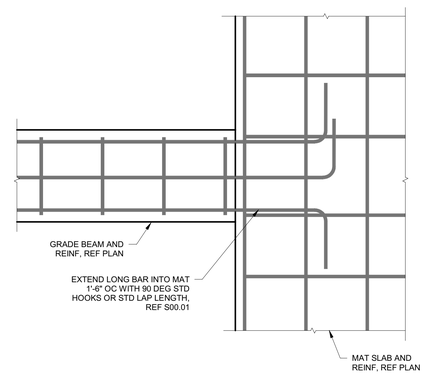

45 S04.04 GRADE BEAM TO MAT SLAB (PLAN VIEW)
1" = 1'-0"

City Of Portland
REVIEWED FOR CODE COMPLIANCE
Date: 02/11/20
Project: ~~19-105743-REV-01-CO~~

SERA

ARCHITECTURE
URBAN DESIGN + PLANNING
INTERIOR DESIGN

PORTLAND OREGON 97209
P: 503.445.7372
F: 503.445.7395
SERADESIGN.COM

STRUCTURAL REGISTERED PROFESSIONAL ENGINEER 51411PE OREGON SEPT. 22, 1989 TIMOTHY T. TERICH
EXPIRES 6-30-20

FROELICH
ENGINEERS
17700 SW Upper Boones Ferry Rd. Suite #115
Portland, Oregon 97223
503.624.7005
froelich-engineers.com
18-T066

18S
GREYSTAR
1715 SW Salmon St
Portland, OR 97205

REVISIONS

1	ADDENDUM 1	5/3/2019
2	ADDENDUM 2	5/9/2019
A	PERMIT RESPONSE 1	6/03/2019
B	PERMIT RESPONSE 2	7/26/2019
C	PERMIT RESPONSE 3	9/18/2019
3	AB 01	9/27/2019
5	AB 04	12/11/2019

CHECKED BY: Checker
ISSUE DATE: 27 SEP 2019
PROJECT NO: 18030X2

FOUNDATION DETAILS

S04.04

Construction Set

12/12/2019 11:44:16 AM SERA Design and Architecture, Inc.