© Copyright protected. See Design Agreement. For use on this project only. Unauthorized reproduction of any part of this material is prohibited.

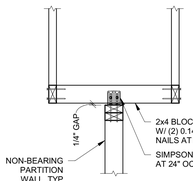

PARALLEL

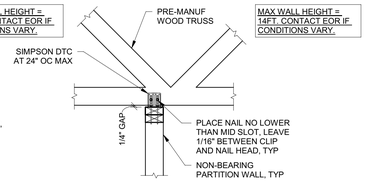

PERPENDICULAR

26 S07.02 NON-BEARING PARTITION WALLS AT ROOF
1" = 1'-0"

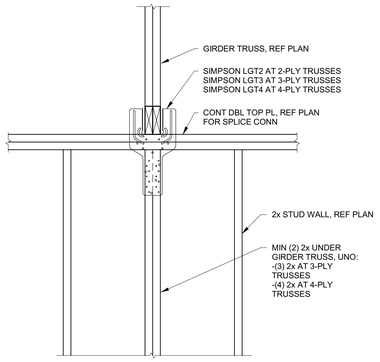

27 S07.02 UPLIFT CONNECTORS AT ROOF GIRDER TRUSSES
1" = 1'-0"

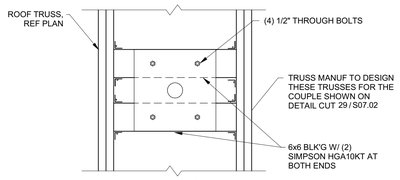

PLAN VIEW

NOTE:
TRUSS MANUF SHALL DESIGN TRUSSES FOR THE FORCES SHOWN

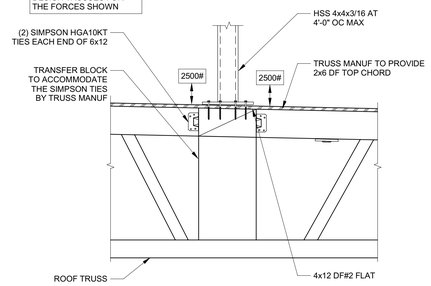

28 S07.02 GUARD RAIL PERPENDICULAR TO ROOF TRUSSES
1" = 1'-0"

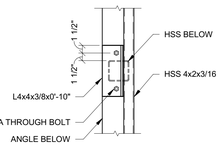

SECTION A-A

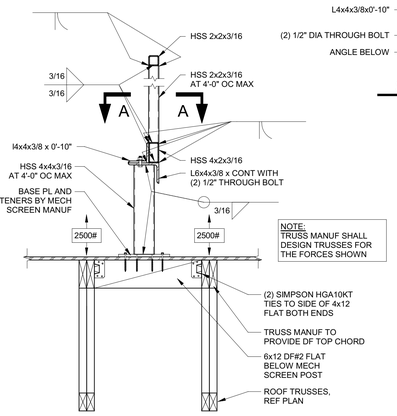

NOTE:
TRUSS MANUF SHALL DESIGN TRUSSES FOR THE FORCES SHOWN

29 S07.02 GUARD RAIL PARALLEL TO ROOF TRUSSES
1" = 1'-0"

TRUSS DESIGNER TO DESIGN ALL DRAG TRUSSES FOR THE FOLLOWING:
1. SHEAR AND GRAVITY LOADS AS INDICATED ON PLANS
2. TRUSS TO COLLECT SHEAR LOADS AND TRANSFER TO BOTTOM CHORD THROUGH WEB MEMBERS
3. TOP AND BOTTOM CHORDS TO HAVE CAPACITY OF TRANSFERRING SHEAR LOAD THROUGH SPLICES

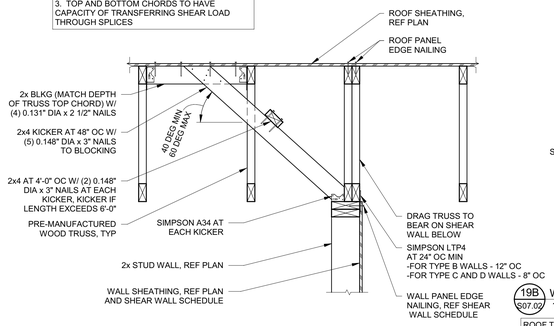

23 S07.02 DRAG TRUSS CONNECTION TO SHEAR WALL
1" = 1'-0"

TRUSS DESIGNER TO DESIGN ALL DRAG TRUSSES FOR THE FOLLOWING:
1. SHEAR AND GRAVITY LOADS AS INDICATED ON PLANS.
2. TRUSS TO COLLECT SHEAR LOADS AND TRANSFER TO BOTTOM CHORD THRU WEB MEMBERS.
3. TOP AND BOTTOM CHORDS TO HAVE CAPACITY OF TRANSFERRING SHEAR LOAD THRU SPLICES.

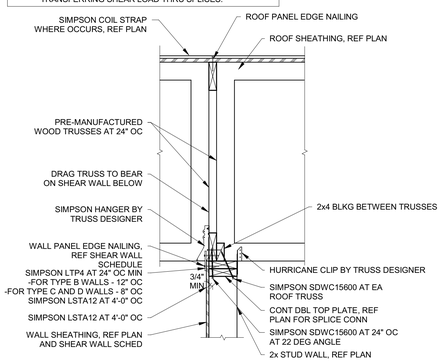

24 S07.02 GIRDER/ DRAG TRUSS CONNECTION TO SHEAR WALL
1" = 1'-0"

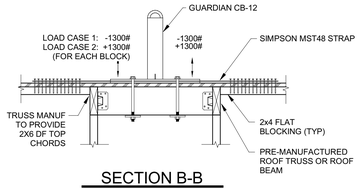

SECTION B-B

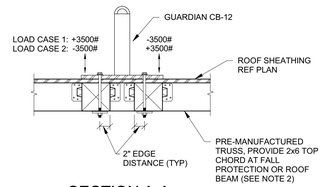

SECTION A-A

NOTES:
1. THE TRUSS MANUF SHALL DESIGN TRUSSES FOR THE FORCE COUPLE SHOWN IN THE APPLICABLE SECTION A-A OR B-B.
2. AT ROOF JOIST FRAMING PROVIDE 6x12 DF #1 BEAMS EACH SIDE OF FALL PROTECTION

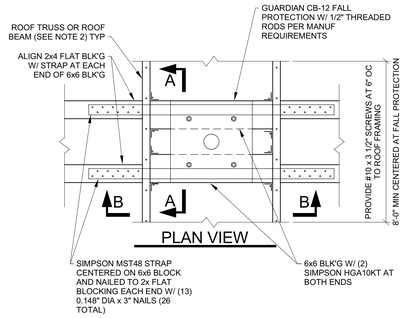

PLAN VIEW

25 S07.02 FALL PROTECTION ANCHORAGE
1" = 1'-0"

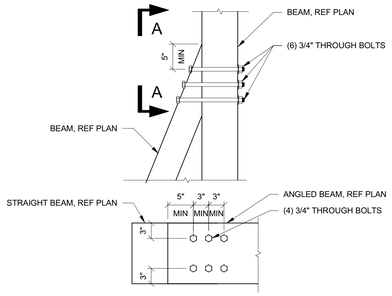

SECTION A-A

19B S07.02 WOOD BEAM TO WOOD BEAM CONNECTION
1" = 1'-0"

ROOF TRUSS BELOW TO DESIGNED FOR ADDITIONAL LOAD OF:
DL = 20LB
SL = 760LB
WL = 7225LB UPLIFT
WL = 3475 DOWNWARD

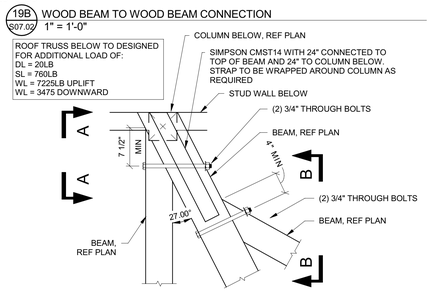

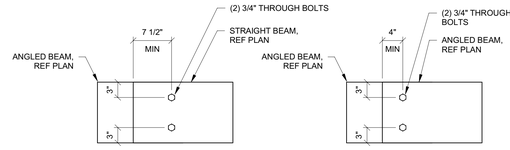

SECTION A-A SECTION B-B

20 S07.02 WOOD BEAM TO WOOD BEAM CONNECTION
1" = 1'-0"

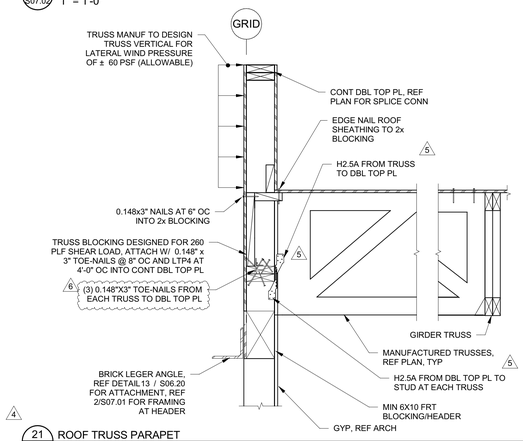

21 S07.02 ROOF TRUSS PARAPET
1" = 1'-0"

4

22 S07.02 DETAIL NOT USED
1" = 1'-0"

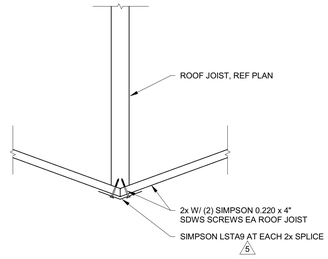

15 S07.02 ROOF MEMBER DETAIL
1" = 1'-0"

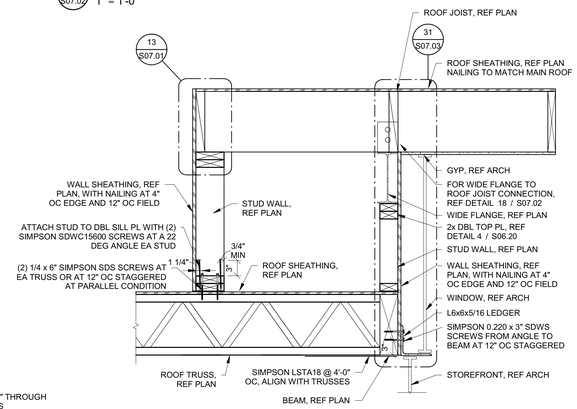

16 S07.02 WOOD ROOF CANOPY SECTION
1" = 1'-0"

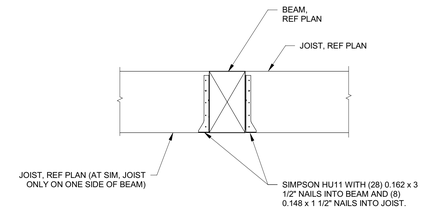

17 S07.02 WOOD JOIST TO WOOD BEAM CONNECTION
1" = 1'-0"

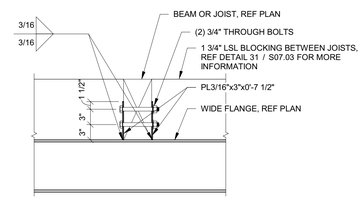

18 S07.02 WOOD BEAM TO STEEL BEAM
1" = 1'-0"

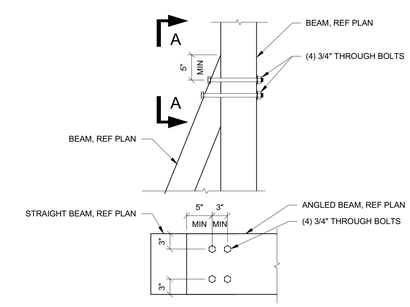

SECTION A-A

19A S07.02 WOOD BEAM TO WOOD BEAM CONNECTION
1" = 1'-0"

City Of Portland
REVIEWED FOR CODE COMPLIANCE
Date: 02/11/20
Project: 19-105743-REV-01-CO

SERA
ARCHITECTURE
URBAN DESIGN + PLANNING
INTERIOR DESIGN
PORTLAND OREGON 97209
P: 503.445.7372
F: 503.445.7395
SERADESIGN.COM

REGISTERED PROFESSIONAL ENGINEER 51411PE OREGON SEPT. 22, 1989 TIMOTHY T. TERCH EXPIRES 6-30-20

FROELICH ENGINEERS
17700 SW Upper Boones Ferry Rd. Suite #115
Portland, Oregon 97223
503.624.7005
froelich-engineers.com
18-T066

18S
GREYSTAR
1715 SW Salmon St.
Portland, OR 97205

REVISIONS

A	PERMIT RESPONSE 1	6/03/2019
B	PERMIT RESPONSE 2	7/26/2019
C	PERMIT RESPONSE 3	9/18/2019
D	PERMIT RESPONSE 4	10/04/2019
4	AB 02	11/01/2019
5	AB 04	12/11/2019
6	AB 06	01/07/2020

CHECKED BY: Checker
ISSUE DATE: 27 SEP 2019
PROJECT NO: 1803002

ROOF FRAMING DETAILS
S07.02

Construction Set