© Copyright protected. See Design Agreement. For use on this project only. Unauthorized reproduction of any part of this material is prohibited.

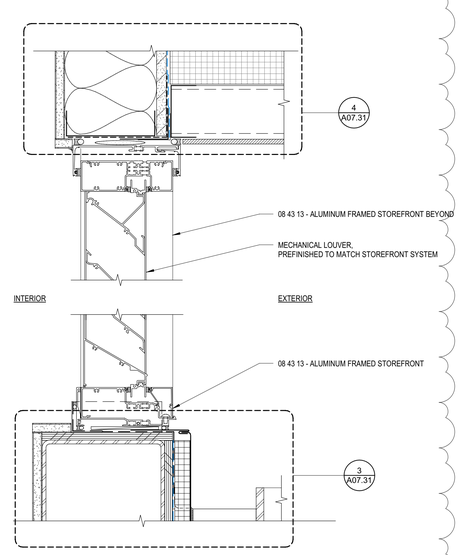

REQUIRED PER LU 19-234469 DZ
SEE G00.04

6 LOUVER OVER CANOPY
3" = 1'-0"

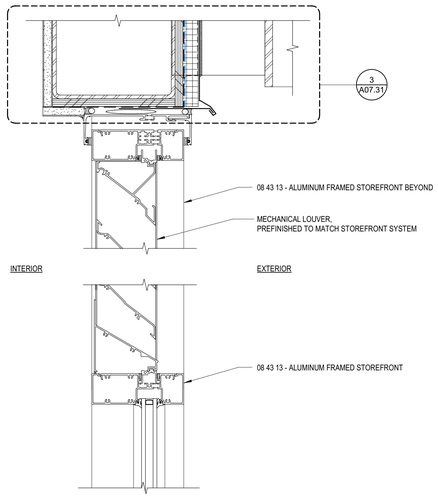

REQUIRED PER LU 19-234469 DZ
SEE G00.04

7 LOUVER OVER STOREFRONT GLAZING
3" = 1'-0"

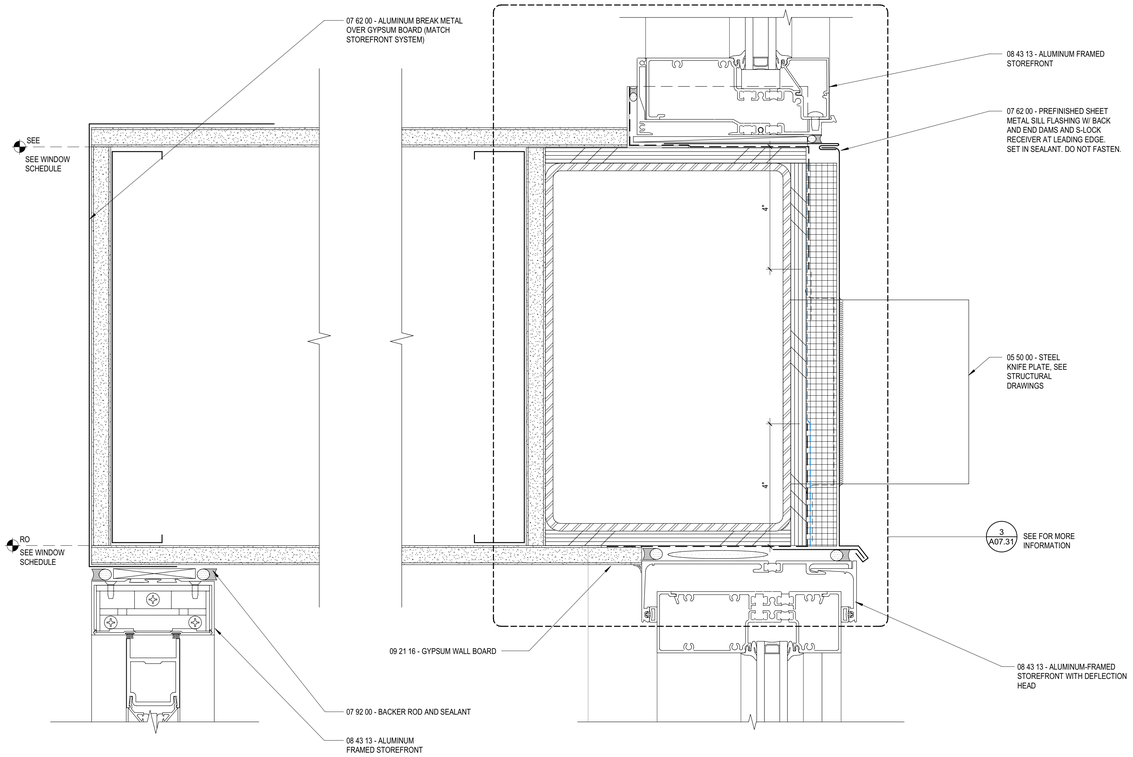

1 VESTIBULE STOREFRONT HEAD AT SOFFIT
6" = 1'-0"

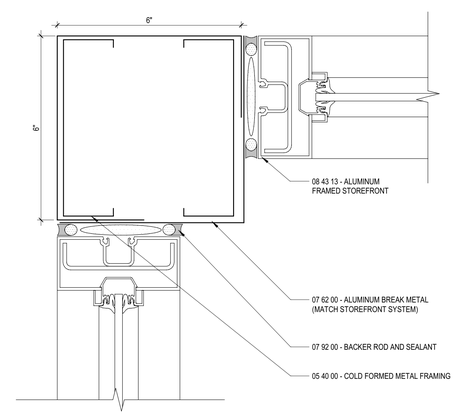

2 VESTIBULE STOREFRONT CORNER JAMB
6" = 1'-0"

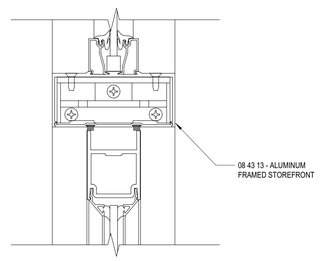

4 VESTIBULE DOOR AT STOREFRONT
6" = 1'-0"

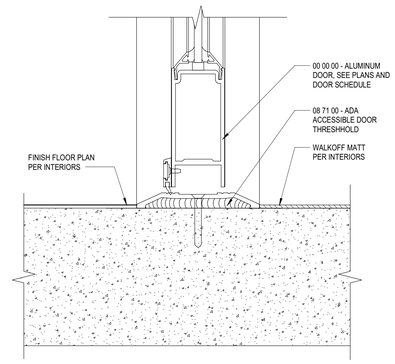

5 STOREFRONT SILL AT VESTIBULE
6" = 1'-0"

City Of Portland
REVIEWED FOR CODE COMPLIANCE
Date: 02/11/20
Project: 19-105743-REV-01-CO

SERA

ARCHITECTURE
URBAN DESIGN + PLANNING
INTERIOR DESIGN

PORTLAND OREGON 97209
P: 503.445.7372
F: 503.445.7395
SERADESIGN.COM

REGISTERED ARCHITECT
3660
KURT K. SCHULTZ
PORTLAND, OR
STATE OF OREGON

18S
GREYSTAR
1715 SW Salmon St
Portland, OR 97205

REVISIONS

6	AB-06	01/07/2020

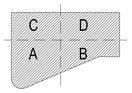

KEYPLAN

CHECKED BY:	Checker
ISSUE DATE:	27 SEP 2019
PROJECT NO:	1803002

EXTERIOR DETAILS STOREFRONT

A07.33

Construction Set

1/7/2020 5:46:34 PM SERA Design and Architecture, Inc.