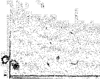

5641

SW CA

LIFORN

IA ST

DFS

-01

○

RS05-1

15707

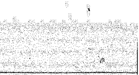

RS.05.115707 DFS.01,

A

JUL 2 0 2005
MICROFILMED

15

CITY OF
PORTLAND, OREGON
BUREAU OF DEVELOPMENT SERVICES
1900 SW 4th Ave, Suite 5000
Portland, OR 97201

MULTNOMAH COUNTY

RESIDENTIAL 1 & 2 FAMILY PERMIT

05-115707-DFS-01-RS

Site Address: 5641 SW CALIFORNIA ST

Issued: 7/13/05

PROJECT INFORMATION		Occ. Group	Const. Type
Single Family Dwelling	New Construction	R3 U	V-N

Project Description: DFS - ROOF TRUSSES --NSFR / 2 story with basement and attached garage / simple / path 1 / furnace in attic/LEES ADD
TRUSSES NOT APPROVED.

APPLICANT	CHRIS BALDWIN CONSTRUCTION *CHRIS BALDWIN*	Phone	(503) 572-0727
PROPERTY OWNER	CHRIS BALDWIN & ANNAMARIE BALDWIN	Phone	
CONTRACTOR	CHRIS BALDWIN CONSTRUCTION *CHRIS BALDWIN*	Phone	

Project Details

Code Edition	IRC - 2003
Number of Stories	2
Valuation at Issuance	270463

Project Details

GIS Update Flag	03/17/05
On-Site Stormwater Facility	Soakage trench - W
Zoning Enforcement Agency	Portland

PAID
JUL 13 2005
CITY OF PORTLAND

This permit expires if, at any time, 180 days pass without an approved inspection. If you are not able to obtain an inspection approval within 180 days, you may request a one-time only extension of 180 days by calling 503-823-7388.

BEFORE YOU DIG — ATTENTION: Oregon law requires you to follow rules adopted by the Oregon Utility Notification Center. Those rules are set forth in OAR 952-001-0010 through OAR 952-001-0090. You may obtain copies of the rules by calling the center. (Note: the telephone number for the Oregon Utility Notification Center is 1-800-332-2344).

CITY CONTACT
Phone:
E-Mail:
Fax: (503) 823-4172

INSPECTION REQUEST PHONE NUMBERS

Building/Trade Inspections - Call Before 6:00 AM: (503) 823-7000

TDD: (503) 823-6868

IVR Inspection Request Number: 2452624

DATE QUOTED

JOB NUMBER

LOADING 42#

Wale Plate? ☐ Yes ☑ No

TRUS-WAY INC

PLAN NUMBER 3720

FRAMER

MGB NO.

PITCH 6

NAME CHRIS BALDWIN CONST

ADDRESS

CITY

DELIVER TO 5641 S.W CALIFORNIA
PORTLAND OR

TEL. NO. | Fax | DATE 7/5/05 | INV. # | DATE DELIVERED

QUAN	SPAN	O.H. FRONT	O.H. BACK	T.C.	B.C.	TYPE	SPECIAL INSTRUCTIONS
1	10'-0	2'-0	2'-0	4	4	GE	
1	10'-0	2'-0	2'-0	4	4	2/2	
1	6'-7	2'0	2'-0	4	4	2/2	STR GE
1	20'-3½	2'-0	2'-0	4	4	4/3	STR GE/Rake for 6'-7
4	20'-3½	2'-0	2'-0	4	4	4/3	
4	13'-6	2'-0	–	4	4	MONO	
1	13'-0	2'0	2'0	4	4	GE	
1	13'0	2'0	2'-0	4	4	2/2	
1	26'-6	2'-0	2'0	4	4	SPEC STR GE	CONT BRG 13'11½ FT/Rake for 13'0
1	26'-6	2'-0	2'0	4	4	4/3	
1	26'-6	2'0	2'-0	4	⑧	GIRD	(3-PLY) CARRY 34'-4
2	34'-4	2'0	2'0	4	4	GE	
13	34'-4	0	2'0	4	4	6/4	
6	34'-4	2'0	2'0	4	4	6/4	
							ALT-OSB ⑦ GABLES ADD $657.–

City of Portland
REVIEWED FOR CODE COMPLIANCE
JUL 13 2005
Permit Number

CONFIRMED

TOTAL PAGE 2:

- PRICE SUBJECT TO CHANGE IF ORDER IS NOT DELIVERED WITHIN 15 DAYS OF ABOVE DATE.
- PAST DUE ACCOUNTS CHARGED 1 1/2% PER MONTH INTEREST OR 18% PER ANNUM OR THE MAXIMUM AS PROVIDED BY LAW.
- REPAIRS OR ALTERATIONS ON JOBSITE WITHOUT PRIOR AUTHORIZATION FROM TRUS-WAY INC. WILL NOT BE RECOGNIZED NOR "BACK-CHARGES" AS A RESULT THEREOF.
- CUSTOMER ASSUMES RESPONSIBILITY FOR UNREASONABLE ACCESS OR EXIT AT JOBSITE.

(SALES TAX NOT INCLUDED) NET 3683.–

P.O. box 5005 Vancouver, WA 98668-5005 (360) 750-1470 (503) 285-2615 Fax (360) 750-1493

05-115707 DFS 01 RS

RECEIVED
BDS
DOCUMENT SERVICES

DATE QUOTED

JOB NUMBER

LOADING 42#

RIDGE PLATE?
☐ YES
☒ NO

PITCH 6

TRUS-WAY INC.

Quality • Service • Integrity
"The Builder's Choice"

PLAN NUMBER 3720

FRAMER

MOB. NO.

NAME CHRIS BALDWIN CONST.

ADDRESS

CITY

T-# F-# DATE 7/5/5

DELIVER TO:

INV. #

DATE DEL

QUAN	SPAN	O.H. FRONT	O.H. BACK	T.C	B.C	TYPE	SPECIAL INSTRUCTIONS
						1	6 pc Valley Set

City of Portland
REVIEWED FOR CODE COMPLIANCE
JUL 13 2005
Permit Number

TYPE A: FULL SCISSOR
TYPE B: CATHEDRAL
TYPE C: DOUBLE CATHEDRAL WITH 2-FLATS
TYPE D: VAULT
TYPE E: FLAT TOP (F/T)
TYPE F: DOUBLE PITCH

CHECKLIST

- __JOB NUMBER
- __BILLING ADDRESS
- __DELIVERY ADDRESS
- __MAP
- __PILOT CAR
- __COD
- __CREDIT INFO
- __PHONE NUMBERS
- __LAYOUT LABELED
- __ALL ENGINEERING
- __SPECIAL DRAWINGS
- __MATCH ORDER SHEET TO LAYOUT
- __DELIVER WITH ANOTHER LOAD

	HIP SYSTEMS / HIP RAFTERS
	(HUS26) HEAVY
4	TYPE A JOIST HANGERS (JUS28)
13	TYPE B JOIST HANGERS (HUS 28)
	TYPE C JOIST HANGERS (JL 24)
	DOUBLE HANGER THD 28.2 (LIGHT)
	DOUBLE HANGER THDH 28.2 (HEAVY)
20	VENT BLOCK
40	SPACE BLOCK
60	TIE DOWNS RT-7

SERVICES

- PRICE SUBJECT TO CHANGE IF ORDER IS NOT DELIVERED WITHIN 15 DAYS OF ABOVE DATE.
- PAST DUE ACCOUNTS CHARGED 1 1/2% PER MONTH INTEREST OR 18% PER ANNUM OR THE MAXIMUM PROVIDED BY LAW
- REPAIRS OR ALTERATIONS ON JOBSITE WITHOUT PRIOR AUTHORIZATION FROM TRUS-WAY INC. WILL NOT BE RECOGNIZED NOR "BACK-CHARGES" AS A RESULT THEREOF.
- CUSTOMER ASSUMES RESPONSIBILITY FOR UNREASONABLE ACCESS OR EXIT AT JOBSITE.

(SALES TAX NOT INCLUDED) NET

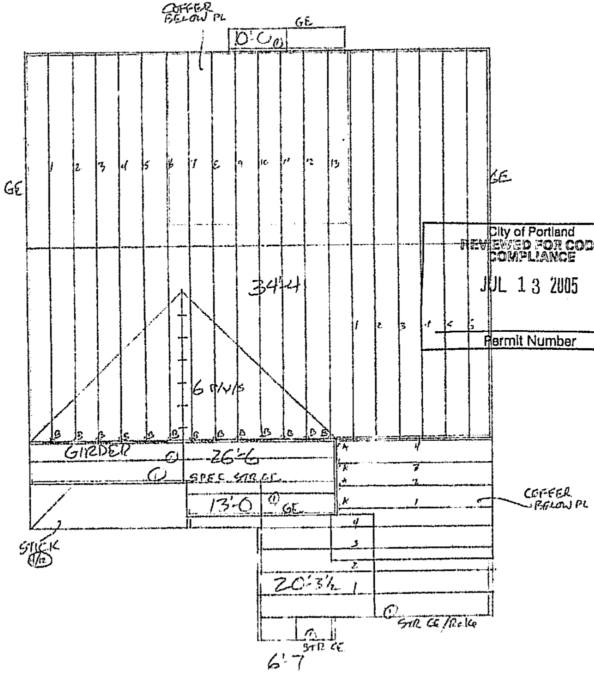
COFFER BELOW PL
GE
10'-0
GE
GE
1 2 3 4 5 6 7 8 9 10 11 12 13
34'-4
6 T/H/S
GIRDER
26'-6
SPEC STR GE
13'-0
GE
COFFER BELOW PL
STICK
20'-3½
STR GE/REG
STR GE
6'7

City of Portland
REVIEWED FOR CODE COMPLIANCE
JUL 13 2005
Permit Number

CHRIS BALDWIN CONST.

42# 6/12 2'-0" OH

3720 sq ft.

5641 SW CALIFORNIA

RECEIVED
DOCUMENT SERVICES

THIS DWG PREPARED FROM COMPUTER INPUT (LOADS & DIMENSIONS) SUBMITTED BY TRUSS MFR.

(ENG14918-/ENGINEERING /BALDWIN 3720 -- . "" - 10-C)

Top chord 2x4 DF-L #1&Bet.(g)
Bot chord 2x4 DF-L #1&Bet.(g)
Webs 2x4 DF-L Standard(g)

Connectors in green lumber (g) designed using NDS/TPI reduction factors.

110 mph wind, 9.08 ft mean hgt, ASCE 7-98, CLOSED bldg, Located anywhere in roof, CAT II, EXP B, wind TC DL=5.2 psf, wind BC DL=7.0 psf.

Deflection meets L/360 live and L/240 total load.

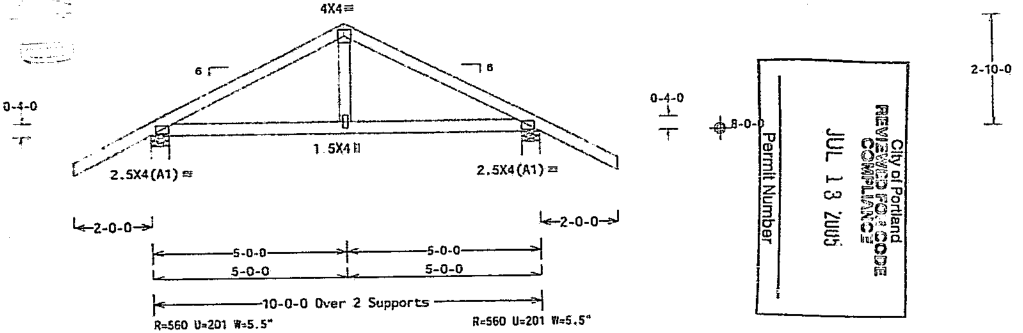

City of Portland
REVIEWED FOR CODE COMPLIANCE
JUL 13 2005
Permit Number

PLT TYP. Wave

Design Crit: TPI-2002(STD)/IBC 7.04.0805.15

OR/-/1/-/-/-/F Scale =.375"/Ft.

Trus-Way, Inc 360-750-1470
3901 NE 68th St., Vancouver WA

ALPINE

Alpine Engineered Products, Inc.
Sacramento, CA 95828

WARNING TRUSSES REQUIRE EXTREME CARE IN FABRICATION, HANDLING, SHIPPING, INSTALLING AND BRACING. REFER TO BCSI 1-03 (BUILDING COMPONENT SAFETY INFORMATION), PUBLISHED BY TPI (TRUSS PLATE INSTITUTE, 583 D'ONOFRIO DR., SUITE 200, MADISON, WI 53719) AND WTCA (WOOD TRUSS COUNCIL OF AMERICA, 6300 ENTERPRISE LN, MADISON, WI 53719) FOR SAFETY PRACTICES PRIOR TO PERFORMING THESE FUNCTIONS. UNLESS OTHERWISE INDICATED, TOP CHORD SHALL HAVE PROPERLY ATTACHED STRUCTURAL PANELS AND BOTTOM CHORD SHALL HAVE A PROPERLY ATTACHED RIGID CEILING.

IMPORTANT FURNISH A COPY OF THIS DESIGN TO THE INSTALLATION CONTRACTOR. ALPINE ENGINEERED PRODUCTS, INC. SHALL NOT BE RESPONSIBLE FOR ANY DEVIATION FROM THIS DESIGN. ANY FAILURE TO BUILD THE TRUSS IN CONFORMANCE WITH TPI; OR FABRICATING, HANDLING, SHIPPING, INSTALLING & BRACING OF TRUSSES. DESIGN CONFORMS WITH APPLICABLE PROVISIONS OF NDS (NATIONAL DESIGN SPEC, BY AFPA) AND TPI. ALPINE CONNECTOR PLATES ARE MADE OF 20/18/16GA (W.H/SS/K) ASTM A653 GRADE 40/60 (W. K/H.SS) GALV. STEEL. APPLY PLATES TO EACH FACE OF TRUSS AND, UNLESS OTHERWISE LOCATED ON THIS DESIGN, POSITION PER DRAWINGS 160A-Z. ANY INSPECTION OF PLATES FOLLOWED BY (I) SHALL BE PER ANNEX A3 OF TPI1-2002 SEC.3. A SEAL ON THIS DRAWING INDICATES ACCEPTANCE OF PROFESSIONAL ENGINEERING RESPONSIBILITY SOLELY FOR THE TRUSS COMPONENT DESIGN SHOWN. THE SUITABILITY AND USE OF THIS COMPONENT FOR ANY BUILDING IS THE RESPONSIBILITY OF THE BUILDING DESIGNER PER ANSI/TPI 1 SEC. 2.

14659
Jul 07 05
DEC. 7, 1989
CHRISTIAN W. CHAPPELL
EXP.12-31-05

TC LL	25.0 PSF	REF R561-- 29341
TC DL	7.0 PSF	DATE 07/07/05
BC DL	10.0 PSF	DRW CAUSR561 05188333
BC LL	0.0 PSF	CA-ENG JRG/CWC *
TOT.LD.	42.0 PSF	SEQN- 104937
DUR.FAC.	1.15	FROM ATT
SPACING	24.0"	JREF- 1S0J561_Z18

THIS DWG PREPARED FROM COMPUTER INPUT (LOADS & DIMENSIONS) SUBMITTED BY TRUSS MFR.

(ENG14918-/ENGINEERING /BALDWIN 3720 -- , ** - 10-GE)

Top chord 2x4 DF-L #1&Bet.(g)
Bot chord 2x4 DF-L #1&Bet.(g)
Webs 2x4 DF-L Standard(g)

Connectors in green lumber (g) designed using NDS/TPI reduction factors.

110 mph wind, 9.08 ft mean hgt, ASCE 7-98, CLOSED bldg, Located anywhere in roof, CAT II, EXP B, wind TC DL=5.2 psf, wind BC DL=7.0 psf.

See DWGS A11015EC1103 & GBLLETIN0405 for more requirements.

Deflection meets L/360 live and L/240 total load.

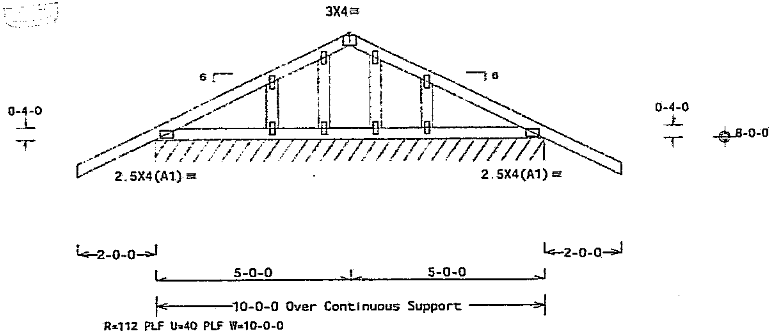

City of Portland
REVIEWED FOR CODE COMPLIANCE
JUL 13 2005
Permit Number

Note: All Plates Are 1.5X4 Except As Shown.

PLT TYP. Wave   Design Crit: TPI-2002(STD)/IBC   7.04.0805.15   OR/-/1/-/-/-/F   Scale =.375"/Ft.

Trus-Way, Inc 360-750-1470
3901 NE 68th St., Vancouver WA

ALPINE

Alpine Engineered Products, Inc.
Sacramento, CA 95828

WARNING TRUSSES REQUIRE EXTREME CARE IN FABRICATION, HANDLING, SHIPPING, INSTALLING AND BRACING. REFER TO BCSI 1-03 (BUILDING COMPONENT SAFETY INFORMATION), PUBLISHED BY TPI (TRUSS PLATE INSTITUTE, 583 D'ONOFRIO DR., SUITE 200, MADISON, WI 53719) AND WTCA (WOOD TRUSS COUNCIL OF AMERICA, 6300 ENTERPRISE LN, MADISON, WI 53719) FOR SAFETY PRACTICES PRIOR TO PERFORMING THESE FUNCTIONS. UNLESS OTHERWISE INDICATED TOP CHORD SHALL HAVE PROPERLY ATTACHED STRUCTURAL PANELS AND BOTTOM CHORD SHALL HAVE A PROPERLY ATTACHED RIGID CEILING.

IMPORTANT FURNISH A COPY OF THIS DESIGN TO THE INSTALLATION CONTRACTOR. ALPINE ENGINEERED PRODUCTS, INC. SHALL NOT BE RESPONSIBLE FOR ANY DEVIATION FROM THIS DESIGN; ANY FAILURE TO BUILD THE TRUSS IN CONFORMANCE WITH TPI; OR FABRICATING, HANDLING, SHIPPING, INSTALLING & BRACING OF TRUSSES. DESIGN CONFORMS WITH APPLICABLE PROVISIONS OF NDS (NATIONAL DESIGN SPEC, BY AF&PA) AND TPI. ALPINE CONNECTOR PLATES ARE MADE OF 20/18/16GA (W,H/S/K) ASTM A653 GRADE 40/60 (W, K/H,S) GALV. STEEL. APPLY PLATES TO EACH FACE OF TRUSS AND, UNLESS OTHERWISE LOCATED ON THIS DESIGN, POSITION PER DRAWINGS 160A-Z. ANY INSPECTION OF PLATES FOLLOWED BY (I) SHALL BE PER ANNEX A3 OF TPI1-2002 SEC.3. A SEAL ON THIS DRAWING INDICATES ACCEPTANCE OF PROFESSIONAL ENGINEERING RESPONSIBILITY SOLELY FOR THE TRUSS COMPONENT DESIGN SHOWN. THE SUITABILITY AND USE OF THIS COMPONENT FOR ANY BUILDING IS THE RESPONSIBILITY OF THE BUILDING DESIGNER PER ANSI/TPI 1 SEC. 2.

CHRISTIAN W. CHAPPELL
14959
07/07/05
EXP.12-31-05

TC LL	25.0 PSF	REF	R561-- 29342
TC DL	7.0 PSF	DATE	07/07/05
BC DL	10.0 PSF	DRW	CAUSR561 05188334
BC LL	0.0 PSF	CA-ENG	JRG/CWC
TOT.LD.	42.0 PSF	SEQN-	104939
DUR.FAC.	1.15	FROM	ATT
SPACING	24.0"	JREF-	1S0J561_Z18

THIS DWG PREPARED FROM COMPUTER INPUT (LOADS & DIMENSIONS) SUBMITTED BY TRUSS MFR.

(ENG14918-/ENGINEERING /BALDWIN 3720 -- , ** - 6-SGE)

Top chord 2x4 DF-L #1&Bet.(g)
Bot chord 2x4 DF-L #1&Bet.(g)
Webs 2x4 DF-L Standard(g)

Connectors in green lumber (g) designed using NDS/TPI reduction factors.

Deflection meets L/360 live and L/240 total load.

110 mph wind, 8.66 ft mean hgt, ASCE 7-98, CLOSED bldg, Located anywhere in roof, CAT II, EXP B, wind TC DL=5.2 psf, wind BC DL=7.0 psf.

Gable end supports 8" max rake overhang.

See DWGS A11015EC1103 & GBLLETIN0405 for more requirements.

SERVICES

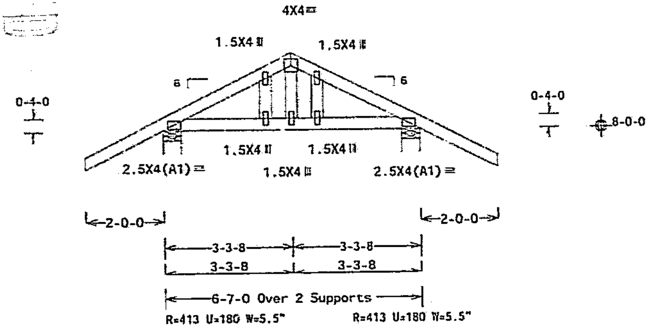

City of Portland
REVIEWED FOR CODE COMPLIANCE
JUL 13 2005
Permit Number

PLT TYP. Wave

Design Crit: TPI-2002(STD)/IBC

7.04.08C5.15

OR/-/1/-/-/-/F

Scale =.375"/Ft.

Trus-Way, Inc 360-750-1470
3901 NE 68th St, Vancouver WA

ALPINE

Alpine Engineered Products, Inc.
Sacramento, CA 95828

WARNING TRUSSES REQUIRE EXTREME CARE IN FABRICATION, HANDLING, SHIPPING, INSTALLING AND BRACING. REFER TO BCSI 1-03 (BUILDING COMPONENT SAFETY INFORMATION), PUBLISHED BY TPI (TRUSS PLATE INSTITUTE, 583 D'ONOFRIO DR., SUITE 200, MADISON, WI 53719) AND WTCA (WOOD TRUSS COUNCIL OF AMERICA, 6300 ENTERPRISE LN, MADISON, WI 53719) FOR SAFETY PRACTICES PRIOR TO PERFORMING THESE FUNCTIONS. UNLESS OTHERWISE INDICATED, TOP CHORD SHALL HAVE PROPERLY ATTACHED STRUCTURAL PANELS AND BOTTOM CHORD SHALL HAVE A PROPERLY ATTACHED RIGID CEILING.

IMPORTANT FURNISH A COPY OF THIS DESIGN TO THE INSTALLATION CONTRACTOR. ALPINE ENGINEERED PRODUCTS, INC. SHALL NOT BE RESPONSIBLE FOR ANY DEVIATION FROM THIS DESIGN; ANY FAILURE TO BUILD THE TRUSS IN CONFORMANCE WITH TPI; OR FABRICATING, HANDLING, SHIPPING, INSTALLING & BRACING OF TRUSSES. DESIGN CONFORMS WITH APPLICABLE PROVISIONS OF NDS (NATIONAL DESIGN SPEC, BY AFPA) AND TPI. ALPINE CONNECTOR PLATES ARE MADE OF 20/18/16GA (W,H/S/K) ASTM A653 GRADE 40/60 (W, K/H,S) GALV. STEEL. APPLY PLATES TO EACH FACE OF TRUSS AND, UNLESS OTHERWISE LOCATED ON THIS DESIGN, POSITION PER DRAWINGS 160A-Z. ANY INSPECTION OF PLATES FOLLOWED BY (I) SHALL BE PER ANNEX A3 OF TPI1-2002 SEC 3. A SEAL ON THIS DRAWING INDICATES ACCEPTANCE OF PROFESSIONAL ENGINEERING RESPONSIBILITY SOLELY FOR THE TRUSS COMPONENT DESIGN SHOWN. THE SUITABILITY AND USE OF THIS COMPONENT FOR ANY BUILDING IS THE RESPONSIBILITY OF THE BUILDING DESIGNER PER ANSI/TPI 1 SEC. 2.

14659
JUL 07 05
CHRISTIAN W. CHAPPEL
DEC. 7, 1989
EXP 12-31-05

TC LL	25.0 PSF	REF	R561-- 29343
TC DL	7.0 PSF	DATE	07/07/05
BC DL	10.0 PSF	DRW	CAUSR561 05188340
BC LL	0.0 PSF	CA-ENG	JRG/CWC
TOT.LD.	42.0 PSF	SEQN-	104943
DUR.FAC.	1.15	FROM	ATT
SPACING	24.0"	JREF-	1S0J561_Z18

THIS DWG PREPARED FROM COMPUTER INPUT (LOADS & DIMENSIONS) SUBMITTED BY TRUSS MFR.

(ENG14918-/ENGINEERING /BALDWIN 3720 -- . "" - 20-C)

Top chord 2x4 DF-L #1&Bet.(g)
Bot chord 2x4 DF-L #1&Bet.(g)
Webs 2x4 DF-L Standard(g)

Connectors in green lumber (g) designed using NDS/TPI reduction factors.

110 mph wind, 10.37 ft mean hgt, ASCE 7-98, CLOSED bldg, Located anywhere in roof, CAT II, EXP B, wind TC DL=5.2 psf, wind BC DL=7.0 psf.

Deflection meets L/360 live and L/240 total load.

10 psf non-concurrent bottom chord live load applied per ANSI/TPI-1.

City of Portland
REVIEWED FOR CODE COMPLIANCE
JUL 13 2005
Permit Number

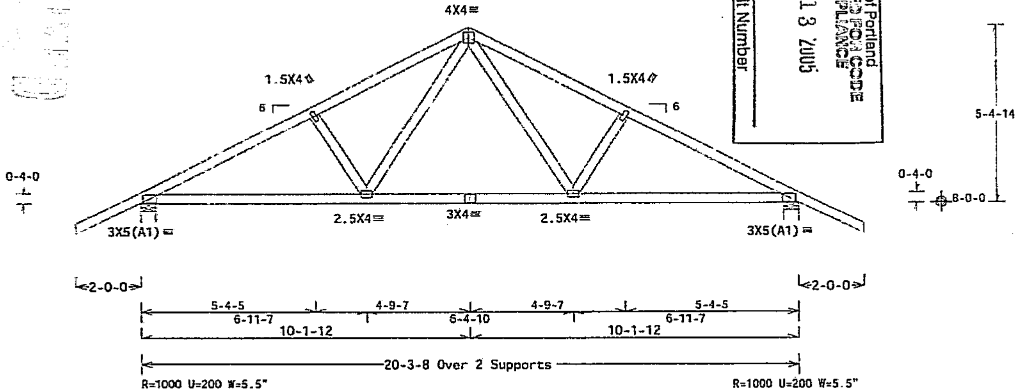

PLT TYP. Wave

Design Crit: TPI-2002(STD)/IBC

7.04.0805.15

OR/-/1/-/-/-/F

Scale =.3125"/Ft.

Trus-Way, Inc 360-750-1470
3901 NE 68th St, Vancouver WA

ALPINE

Alpine Engineered Products, Inc.
Sacramento, CA 95828

WARNING TRUSSES REQUIRE EXTREME CARE IN FABRICATION, HANDLING, SHIPPING, INSTALLING AND BRACING. REFER TO BCSI 1-03 (BUILDING COMPONENT SAFETY INFORMATION) PUBLISHED BY TPI (TRUSS PLATE INSTITUTE, 583 D'ONOFRIO DR., SUITE 200, MADISON, WI 53719) AND WTCA (WOOD TRUSS COUNCIL OF AMERICA, 6300 ENTERPRISE LN, MADISON, WI 53719) FOR SAFETY PRACTICES PRIOR TO PERFORMING THESE FUNCTIONS. UNLESS OTHERWISE INDICATED, TOP CHORD SHALL HAVE PROPERLY ATTACHED STRUCTURAL PANELS AND BOTTOM CHORD SHALL HAVE A PROPERLY ATTACHED RIGID CEILING.

IMPORTANT FURNISH A COPY OF THIS DESIGN TO THE INSTALLATION CONTRACTOR. ALPINE ENGINEERED PRODUCTS, INC. SHALL NOT BE RESPONSIBLE FOR ANY DEVIATION FROM THIS DESIGN; ANY FAILURE TO BUILD THE TRUSS IN CONFORMANCE WITH TPI; OR FABRICATING, HANDLING, SHIPPING, INSTALLING & BRACING OF TRUSSES. DESIGN CONFORMS WITH APPLICABLE PROVISIONS OF NDS (NATIONAL DESIGN SPEC, BY AF&PA) AND TPI. ALPINE CONNECTOR PLATES ARE MADE OF 20/18/16GA (W,H/S/K) ASTM A653 GRADE 40/60 (W, K/H,S) GALV. STEEL. APPLY PLATES TO EACH FACE OF TRUSS AND, UNLESS OTHERWISE LOCATED ON THIS DESIGN, POSITION PER DRAWINGS 160A-Z. ANY INSPECTION OF PLATES FOLLOWED BY (I) SHALL BE PER ANNEX A3 OF TPI1-2002 SEC 3. A SEAL ON THIS DRAWING INDICATES ACCEPTANCE OF PROFESSIONAL ENGINEERING RESPONSIBILITY SOLELY FOR THE TRUSS COMPONENT DESIGN SHOWN. THE SUITABILITY AND USE OF THIS COMPONENT FOR ANY BUILDING IS THE RESPONSIBILITY OF THE BUILDING DESIGNER PER ANSI/TPI 1 SEC. 2

REGISTERED PROFESSIONAL ENGINEER
14659
Jul 07 '05
OREGON
DEC. 7, 1989
CHRISTIAN W. CHAPPELL
EXP 12-31-05

TC LL	25.0 PSF	REF R561-- 29344
TC DL	7.0 PSF	DATE 07/07/05
BC DL	10.0 PSF	DRW CAUSR561 05188335
BC LL	0.0 PSF	CA-ENG JRG/CWC *
TOT.LD.	42.0 PSF	SEQN- 104948
DUR.FAC.	1.15	FROM ATT
SPACING	24.0"	JREF- 1S0J561_Z18

THIS DWG PREPARED FROM COMPUTER INPUT (LOADS & DIMENSIONS) SUBMITTED BY TRUSS MFR.

(ENG14918-/ENGINEERING /BALDWIN 3720 -- , ** - 20-R)

Top chord 2x4 DF-L #1&Bet.(g)
Bot chord 2x4 DF-L #1&Bet.(g)
Webs 2x4 DF-L Standard(g)

Connectors in green lumber (g) designed using NDS/TPI reduction factors.

Deflection meets L/360 live and L/240 total load.

110 mph wind, 10.37 ft mean hgt, ASCE 7-98, CLOSED bldg, Located anywhere in roof, CAT II, EXP B, wind TC DL=5.2 psf, wind BC DL=7.0 psf.

Gable end supports 8" max rake overhang.

See DWGS A11015EC1103 & GBLLETIN0405 for more requirements.

10 psf non-concurrent bottom chord live load applied per ANSI/TPI-1.

City of Portland
REVIEWED FOR CODE COMPLIANCE
JUL 13 2007
Permit Number

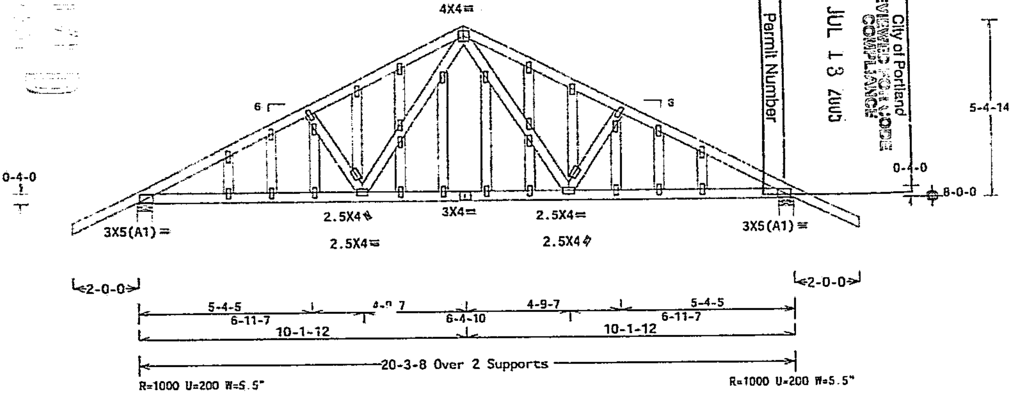

Note: All Plates Are 1.5X4 Except As Shown.

PLT TYP. Wave Design Crit: TPI-2002(STD)/ISC 7.04.0805.15 OR/-/1/-/-/-/F Scale =.3125"/Ft.

Tru-Way, Inc 360-750-1470
3901 NE 68th St., Vancouver WA

ALPINE

Alpine Engineered Products, Inc.
Sacramento, CA 95823

WARNING TRUSSES REQUIRE EXTREME CARE IN FABRICATION, HANDLING, SHIPPING, INSTALLING AND BRACING. REFER TO BCSI 1-03 (BUILDING COMPONENT SAFETY INFORMATION), PUBLISHED BY TPI (TRUSS PLATE INSTITUTE, 583 D'ONOFRIO DR., SUITE 200, MADISON, WI 53719) AND WTCA (WOOD TRUSS COUNCIL OF AMERICA, 6300 ENTERPRISE LN, MADISON, WI 53719) FOR SAFETY PRACTICES PRIOR TO PERFORMING THESE FUNCTIONS. UNLESS OTHERWISE INDICATED, TOP CHORD SHALL HAVE PROPERLY ATTACHED STRUCTURAL PANELS AND BOTTOM CHORD SHALL HAVE A PROPERLY ATTACHED RIGID CEILING.

IMPORTANT FURNISH A COPY OF THIS DESIGN TO THE INSTALLATION CONTRACTOR. ALPINE ENGINEERED PRODUCTS, INC. SHALL NOT BE RESPONSIBLE FOR ANY DEVIATION FROM THIS DESIGN; ANY FAILURE TO BUILD THE TRUSS IN CONFORMANCE WITH TPI; OR FABRICATING, HANDLING, SHIPPING, INSTALLING & BRACING OF TRUSSES. DESIGN CONFORMS WITH APPLICABLE PROVISIONS OF NDS (NATIONAL DESIGN SPEC, BY AFANDPA) AND TPI. ALPINE CONNECTOR PLATES ARE MADE OF 20/18/16GA (W.H/SS/K) ASTM A653 GRADE 40/60 (W, K/H.SS) GALV. STEEL. APPLY PLATES TO EACH FACE OF TRUSS AND, UNLESS OTHERWISE LOCATED ON THIS DESIGN, POSITION PER DRAWINGS 160A-Z. ANY INSPECTION OF PLATES FOLLOWED BY (I) SHALL BE PER ANNEX A3 OF TPI1-2002 SEC.3. A SEAL ON THIS DRAWING INDICATES ACCEPTANCE OF PROFESSIONAL ENGINEERING RESPONSIBILITY SOLELY FOR THE TRUSS COMPONENT DESIGN SHOWN. THE SUITABILITY AND USE OF THIS COMPONENT FOR ANY BUILDING IS THE RESPONSIBILITY OF THE BUILDING DESIGNER PER ANSI/TPI 1 SEC. 2

14659
Jul 07 '05
OREGON
DEC. 7, 1989
CHRISTIAN W. CHAPPELL
EXP.12-31-05

TC LL	25.0 PSF	REF R561-- 29345
TC DL	7.0 PSF	DATE 07/07/05
BC DL	10.0 PSF	DRW CAUSR561 05188341
BC LL	0.0 PSF	CA-ENG JRG/CWC
TOT.LD.	42.0 PSF	SEQN- 104951
DUR.FAC.	1.15	FROM ATT
SPACING	24.0"	JREF- 1S0J561_Z18

THIS DWG PREPARED FROM COMPUTER INPUT (LOADS & DIMENSIONS) SUBMITTED BY TRUSS MFR.

(ENG14918-/ENGINEERING /BALDWIN 3720 -- , ** - 13-M)

Top chord 2x4 DF-L #1&Bet.(g)
Bot chord 2x4 DF-L #1&Bet.(g)
Webs 2x4 DF-L Standard(g)

Connectors in green lumber (g) designed using NDS/TPI reduction factors.

Deflection meets L/360 live and L/240 total load.

10 psf non-concurrent bottom chord live load applied per ANSI/TPI-1.

110 mph wind, 11.21 ft mean hgt, ASCE 7-98, CLOSED bldg, Located anywhere in roof, CAT II, EXP B, wind TC DL=5.2 psf, wind BC DL=7.0 psf.

Right end vertical not exposed to wind pressure.

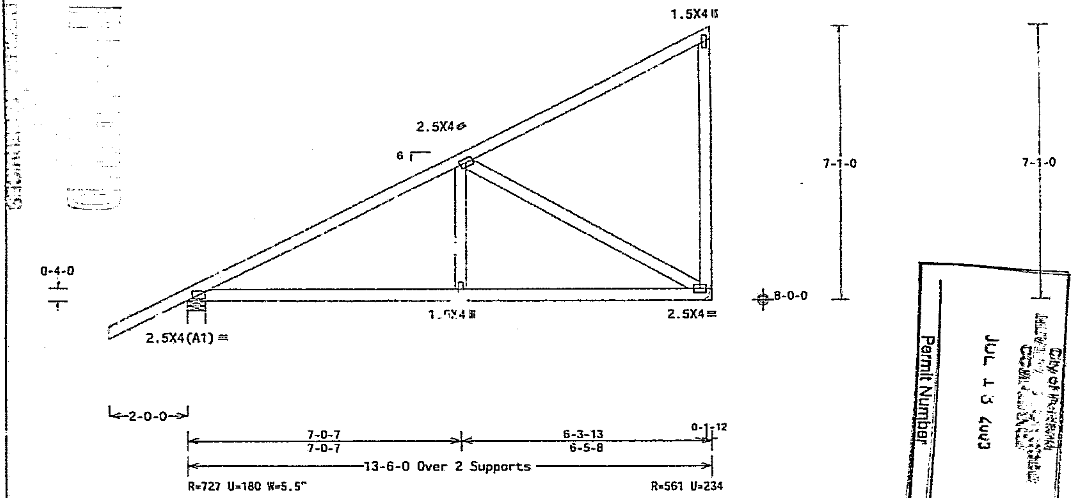

City of [illegible]

JUL 1 3 2005

Permit Number

PLT TYP. Wave   Design Crit: TPI-2002(STD)/IBC   7.04.0805.15   OR/-/1/-/-/-/F   Scale =.375"/Ft.

Trus-Way, Inc 360-750-1470
3901 NE 68th St., Vancouver WA

ALPINE

Alpine Engineered Products, Inc.
Sacramento, CA 95828

WARNING TRUSSES REQUIRE EXTREME CARE IN FABRICATION, HANDLING, SHIPPING, INSTALLING AND BRACING. REFER TO BCSI 1-03 (BUILDING COMPONENT SAFETY INFORMATION), PUBLISHED BY TPI (TRUSS PLATE INSTITUTE, 583 D'ONOFRIO DR., SUITE 200, MADISON, WI 53719) AND WTCA (WOOD TRUSS COUNCIL OF AMERICA, 6300 ENTERPRISE LN, MADISON, WI 53719) FOR SAFETY PRACTICES PRIOR TO PERFORMING THESE FUNCTIONS. UNLESS OTHERWISE INDICATED, TOP CHORD SHALL HAVE PROPERLY ATTACHED STRUCTURAL PANELS AND BOTTOM CHORD SHALL HAVE A PROPERLY ATTACHED RIGID CEILING.

IMPORTANT FURNISH A COPY OF THIS DESIGN TO THE INSTALLATION CONTRACTOR. ALPINE ENGINEERED PRODUCTS, INC. SHALL NOT BE RESPONSIBLE FOR ANY DEVIATION FROM THIS DESIGN; ANY FAILURE TO BUILD THE TRUSS IN CONFORMANCE WITH TPI; OR FABRICATING, HANDLING, SHIPPING, INSTALLING & BRACING OF TRUSSES. DESIGN CONFORMS WITH APPLICABLE PROVISIONS OF NDS (NATIONAL DESIGN SPEC, BY AFPA) AND TPI. ALPINE CONNECTOR PLATES ARE MADE OF 20/18/16GA (W,H/S/K) ASTM A653 GRADE 40/60 (W, K/H,SS) GALV. STEEL. APPLY PLATES TO EACH FACE OF TRUSS AND, UNLESS OTHERWISE LOCATED ON THIS DESIGN, POSITION PER DRAWINGS 160A-Z. ANY INSPECTION OF PLATES FOLLOWED BY (I) SHALL BE PER ANNEX A3 OF TPI1-2002 SEC.3. A SEAL ON THIS DRAWING INDICATES ACCEPTANCE OF PROFESSIONAL ENGINEERING RESPONSIBILITY SOLELY FOR THE TRUSS COMPONENT DESIGN SHOWN. THE SUITABILITY AND USE OF THIS COMPONENT FOR ANY BUILDING IS THE RESPONSIBILITY OF THE BUILDING DESIGNER PER ANSI/TPI 1 SEC. 2.

14859
Jul 07 '05
CHRISTIAN W. CHAPPELL
EXP 12-31-05

TC LL	25.0 PSF	REF	R561-- 29346
TC DL	7.0 PSF	DATE	07/07/05
BC DL	10.0 PSF	DRW	CAUSR561 05180342
BC LL	0.0 PSF	CA-ENG	JRG/CWC
TOT.LD.	42.0 PSF	SEQN-	104955
DUR.FAC.	1.15	FROM	ATT
SPACING	24.0"	JREF-	1S0J561_Z18

THIS DWG PREPARED FROM COMPUTER INPUT (LOADS & DIMENSIONS) SUBMITTED BY TRUSS MFR.

(ENG1491B-/ENGINEERING /BALDWIN 3720 -- . ** - 13-C)

Top chord 2x4 DF-L #1&Bet.(g)
Bot chord 2x4 DF-L #1&Bet.(g)
Webs 2x4 DF-L Standard(g)

Connectors in green lumber (g) designed using NDS/TPI reduction factors.

1*0 mph wind, 9.46 ft mean hgt, ASCE 7-98, CLOSED bldg, Located anywhere in roof, CAT II, EXP B, wind TC DL=5.2 psf, wind BC DL=7.0 psf.

Deflection meets L/360 live and L/240 total load.

10 psf non-concurrent bottom chord live load applied per ANSI/TPI-1.

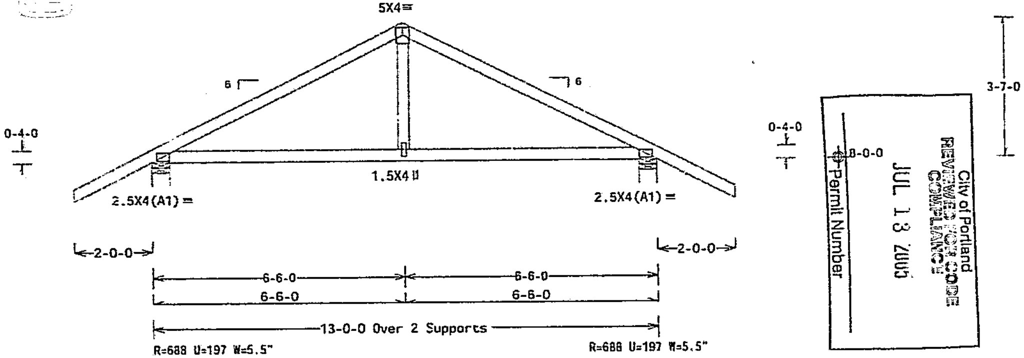

City of Portland
REVIEWED FOR CODE COMPLIANCE
JUL 13 2005
Permit Number

PLT TYP. Wave

Design Crit: TPI-2002(STD)/IBC

7.04.0805.1

OR/-/1/-/-/-/F

Scale =.375"/Ft.

Tru-Way, Inc 360-750-1470
3901 NE 68th St., Vancouver WA

ALPINE

Alpine Engineered Products, Inc.
Sacramento, CA 95828

WARNING TRUSSES REQUIRE EXTREME CARE IN FABRICATION, HANDLING, SHIPPING, INSTALLING AND BRACING. REFER TO BCSI 1-03 (BUILDING COMPONENT SAFETY INFORMATION), PUBLISHED BY TPI (TRUSS PLATE INSTITUTE, 583 D'ONOFRIO DR., SUITE 200, MADISON, WI 53719) AND WTCA (WOOD TRUSS COUNCIL OF AMERICA, 6300 ENTERPRISE LN, MADISON, WI 53719) FOR SAFETY PRACTICES PRIOR TO PERFORMING THESE FUNCTIONS. UNLESS OTHERWISE INDICATED, TOP CHORD SHALL HAVE PROPERLY ATTACHED STRUCTURAL PANELS AND BOTTOM CHORD SHALL HAVE A PROPERLY ATTACHED RIGID CEILING.

IMPORTANT FURNISH A COPY OF THIS DESIGN TO THE INSTALLATION CONTRACTOR. ALPINE ENGINEERED PRODUCTS, INC. SHALL NOT BE RESPONSIBLE FOR ANY DEVIATION FROM THIS DESIGN; ANY FAILURE TO BUILD THE TRUSS IN CONFORMANCE WITH TPI; OR FABRICATING, HANDLING, SHIPPING, INSTALLING & BRACING OF TRUSSES. DESIGN CONFORMS WITH APPLICABLE PROVISIONS OF NDS (NATIONAL DESIGN SPEC, BY AF&PA) AND TPI. ALPINE CONNECTOR PLATES ARE MADE OF 20/18/16GA (W,H/S/K) ASTM A653 GRADE 40/60 (W, K/H,S) GALV. STEEL. APPLY PLATES TO EACH FACE OF TRUSS AND, UNLESS OTHERWISE LOCATED ON THIS DESIGN, POSITION PER DRAWINGS 160A-Z. ANY INSPECTION OF PLATES FOLLOWED BY (I) SHALL BE PER ANNEX A3 OF TPI1-2002 SEC.3. A SEAL ON THIS DRAWING INDICATES ACCEPTANCE OF PROFESSIONAL ENGINEERING RESPONSIBILITY SOLELY FOR THE TRUSS COMPONENT DESIGN SHOWN. THE SUITABILITY AND USE OF THIS COMPONENT FOR ANY BUILDING IS THE RESPONSIBILITY OF THE BUILDING DESIGNER PER ANSI/TPI 1 SEC. 2.

14658
Jul 07 '05
CHRISTIAN W. CHAPPELL
EXP 12-31-05

TC LL	25.0 PSF	REF	R561-- 29347
TC DL	7.0 PSF	DATE	07/07/05
BC DL	10.0 PSF	DRW	CAUSR561 05189336
BC LL	0.0 PSF	CA-ENG	JRG/CWC *
TOT.LD.	42.0 PSF	SEQN-	104959
DUR.FAC.	1.15	FROM	ATT
SPACING	24.0"	JREF-	1S0J561_Z18

THIS DWG PREPARED FROM COMPUTER INPUT (LOADS & DIMENSIONS) SUBMITTED BY TRUSS MFR.

(ENG14918-/ENGINEERING /BALDWIN 3720 -- . ** - 13-GE)

Top chord 2x4 DF-L #1&Bet.(g)
Bot chord 2x4 DF-L #1&Bet.(g)
Webs 2x4 DF-L Standard(g)

Connectors in green lumber (g) designed using NDS/TPI reduction factors.

10 psf non-concurrent bottom chord live load applied per ANSI/TPI-1.

110 mph wind, 9.46 ft mean hgt, ASCE 7-98, CLOSED bldg, Located anywhere in roof, CAT II, EXP B, wind TC DL=5.2 psf, wind BC DL=7.0 psf.

See DWGS A11015EC1103 & GBLLETIN0405 for more requirements.

Deflection meets L/360 live and L/240 total load.

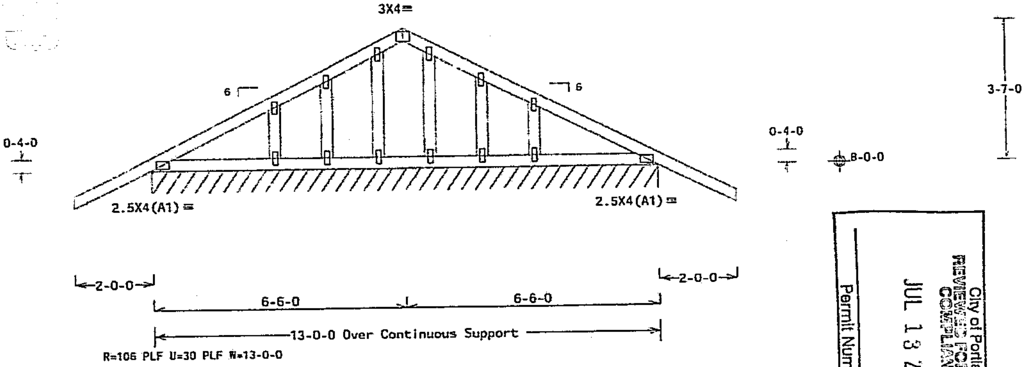

Note: All Plates Are 1.5X4 Except As Shown.

PLT TYP. Wave

Design Crit: TPI-2002(STD)/IBC

7.04.0805.15

Trus-Way, Inc. 360-750-1470
3901 NE 68th St., Vancouver WA

ALPINE

Alpine Engineered Products, Inc.
Sacramento, CA 95828

WARNING TRUSSES REQUIRE EXTREME CARE IN FABRICATION, HANDLING, SHIPPING, INSTALLING AND BRACING. REFER TO BCSI 1-03 (BUILDING COMPONENT SAFETY INFORMATION), PUBLISHED BY TPI (TRUSS PLATE INSTITUTE, 583 D'ONOFRIO DR., SUITE 200, MADISON, WI 53719) AND WTCA (WOOD TRUSS COUNCIL OF AMERICA, 6300 ENTERPRISE LN, MADISON, WI 53719) FOR SAFETY PRACTICES PRIOR TO PERFORMING THESE FUNCTIONS. UNLESS OTHERWISE INDICATED, TOP CHORD SHALL HAVE PROPERLY ATTACHED STRUCTURAL PANELS AND BOTTOM CHORD SHALL HAVE A PROPERLY ATTACHED RIGID CEILING.

IMPORTANT FURNISH A COPY OF THIS DESIGN TO THE INSTALLATION CONTRACTOR. ALPINE ENGINEERED PRODUCTS, INC. SHALL NOT BE RESPONSIBLE FOR ANY DEVIATION FROM THIS DESIGN; ANY FAILURE TO BUILD THE TRUSS IN CONFORMANCE WITH TPI; OR FABRICATING, HANDLING, SHIPPING, INSTALLING & BRACING OF TRUSSES. DESIGN CONFORMS WITH APPLICABLE PROVISIONS OF NDS (NATIONAL DESIGN SPEC, BY AFPA) AND TPI. ALPINE CONNECTOR PLATES ARE MADE OF 20/18/16GA (W,H/S/K) ASTM A653 GRADE 40/60 (W, K/H.S) GALV. STEEL. APPLY PLATES TO EACH FACE OF TRUSS AND, UNLESS OTHERWISE LOCATED ON THIS DESIGN, POSITION PER DRAWINGS 160A-Z. ANY INSPECTION OF PLATES FOLLOWED BY (I) SHALL BE PER ANNEX A3 OF TPI1-2002 SEC.3. A SEAL ON THIS DRAWING INDICATES ACCEPTANCE OF PROFESSIONAL ENGINEERING RESPONSIBILITY SOLELY FOR THE TRUSS COMPONENT DESIGN SHOWN. THE SUITABILITY AND USE OF THIS COMPONENT FOR ANY BUILDING IS THE RESPONSIBILITY OF THE BUILDING DESIGNER PER ANSI/TPI 1 SEC. 2

REGISTERED PROFESSIONAL ENGINEER
14639
Jul 07 '05
OREGON
DEC. 7, 1989
CHRISTIAN W. CHAPPELL
EXP 12-31-05

OR/-/1/-/-/-/F

Scale =.375"/Ft.

TC LL	25.0	PSF
TC DL	7.0	PSF
BC DL	10.0	PSF
BC LL	0.0	PSF
TOT.LD.	42.0	PSF
DUR.FAC.	1.15	
SPACING	24.0"	

REF	R561-- 29348
DATE	07/07/05
DRW	~~CAUSR561~~ 05188337
CA-ENG	JRG/CWC *
SEQN-	104961
FROM	ATT
JREF-	1S0J561_Z18

City of Portland
REVIEWED FOR CODE COMPLIANCE
JUL 13 2005
Permit Number

THIS DWG PREPARED FROM COMPUTER INPUT (LOADS & DIMENSIONS) SUBMITTED BY TRUSS MFR.

(ENG14918-/ENGINEERING /BALDWIN 3720 -- . ** - 26-C)

Top chord 2x4 DF-L #1&Bet.(g)
Bot chord 2x4 DF-L #1&Bet.(g)
Webs 2x4 DF-L Standard(g)

Connectors in green lumber (g) designed using NDS/TPI reduction factors.

110 mph wind, 11.15 ft mean hgt, ASCE 7-98, CLOSED bldg, Located anywhere in roof, CAT II, EXP B, wind TC DL=5.2 psf, wind BC DL=7.0 psf.

Deflection meets L/360 live and L/240 total load.

10 psf non-concurrent bottom chord live load applied per ANSI/TPI-1.

City of Portland
REVIEWED FOR CODE COMPLIANCE
JUL 13 2005
Permit Number

DOCUMENT SERVICES
RECEIVED

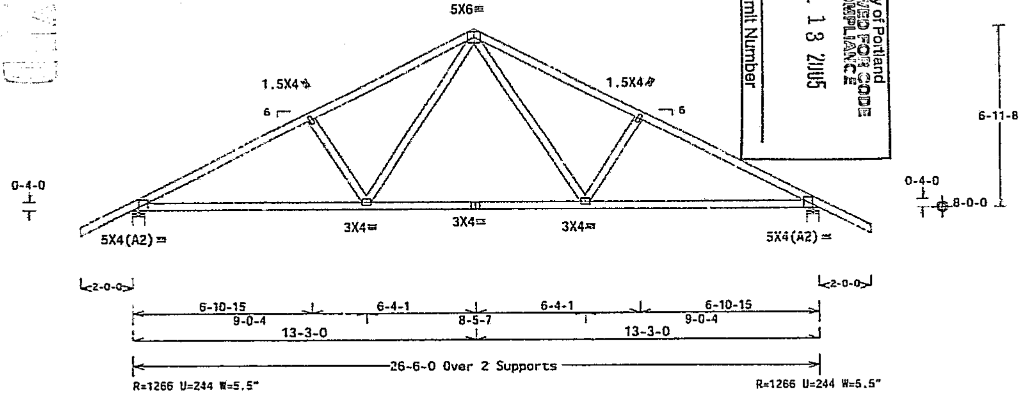

PLT TYP. Wave

Design Crit: TPI-2002(STD)/IBC 7.04.0805.1

DR/-/1/-/-/-/F

Scale =.25"/Ft.

True-Way, Inc. 360-750-1470
3901 NE 68th St., Vancouver WA

ALPINE

Alpine Engineered Products, Inc.
Sacramento, CA 95828

WARNING TRUSSES REQUIRE EXTREME CARE IN FABRICATION, HANDLING, SHIPPING, INSTALLING AND BRACING. REFER TO BCSI 1-03 (BUILDING COMPONENT SAFETY INFORMATION), PUBLISHED BY TPI (TRUSS PLATE INSTITUTE, 583 D'ONOFRIO DR., SUITE 200, MADISON, WI 53719) AND WTCA (WOOD TRUSS COUNCIL OF AMERICA, 6300 ENTERPRISE LN, MADISON, WI 53719) FOR SAFETY PRACTICES PRIOR TO PERFORMING THESE FUNCTIONS. UNLESS OTHERWISE INDICATED, TOP CHORD SHALL HAVE PROPERLY ATTACHED STRUCTURAL PANELS AND BOTTOM CHORD SHALL HAVE A PROPERLY ATTACHED RIGID CEILING.

IMPORTANT FURNISH A COPY OF THIS DESIGN TO THE INSTALLATION CONTRACTOR. ALPINE ENGINEERED PRODUCTS, INC. SHALL NOT BE RESPONSIBLE FOR ANY DEVIATION FROM THIS DESIGN; ANY FAILURE TO BUILD THE TRUSS IN CONFORMANCE WITH TPI; OR FABRICATING, HANDLING, SHIPPING, INSTALLING & BRACING OF TRUSSES. DESIGN CONFORMS WITH APPLICABLE PROVISIONS OF NDS (NATIONAL DESIGN SPEC. BY AFBPA) AND TPI. ALPINE CONNECTOR PLATES ARE MADE OF 20/18/16GA (W,H/S/K) ASTM A653 GRADE 40/60 (W, K/H,S) GALV. STEEL. APPLY PLATES TO EACH FACE OF TRUSS AND, UNLESS OTHERWISE LOCATED ON THIS DESIGN, POSITION PER DRAWINGS 160A-Z. ANY INSPECTION OF PLATES FOLLOWED BY (I) SHALL BE PER ANNEX A3 OF TPI1-2002 SEC.3. A SEAL ON THIS DRAWING INDICATES ACCEPTANCE OF PROFESSIONAL ENGINEERING RESPONSIBILITY SOLELY FOR THE TRUSS COMPONENT DESIGN SHOWN. THE SUITABILITY AND USE OF THIS COMPONENT FOR ANY BUILDING IS THE RESPONSIBILITY OF THE BUILDING DESIGNER PER ANSI/TPI 1 SEC. 2.

14659
07 '05
CHRISTIAN W. CHAPPELL
EXP 12-31-05

TC LL	25.0 PSF	REF	R561-- 29349
TC DL	7.0 PSF	DATE	07/07/05
BC DL	10.0 PSF	DRW	CAUSR561 05188338
BC LL	0.0 PSF	CA-ENG	JRG/CWC
TOT.LD.	42.0 PSF	SEQN-	104968
DUR.FAC.	1.15	FROM	ATT
SPACING	24.0"	JREF-	1S0J561_Z18

THIS DWG PREPARED FROM COMPUTER INPUT (LOADS & DIMENSIONS) SUBMITTED BY TRUSS MFR.

(ENG14918-/ENGINEERING /BALDWIN 3720 ·· . '' · 26-G)

Top chord 2x4 DF-L #1&Bet.(g)
Bot chord 1.5"x7.5" DF-L SS(g)
Webs 2x4 DF-L Standard(g) :W3 2x4 DF-L #1&Bet.(g):
:Lt Wedge 2x4 DF-L Standard(g)::Rt Wedge 2x4 DF-L Standard(g):

Connectors in green lumber (g) designed using NDS/TPI reduction factors.

110 mph wind, 15.00 ft mean hgt, ASCE 7-98, CLOSED bldg, Located anywhere in roof, CAT II, EXP B, wind TC DL=5.2 psf, wind BC DL=7.0 psf.

Deflection meets L/360 live and L/240 total load.

3 COMPLETE TRUSSES REQUIRED

Nailing Schedule: (0.131"x3"_Gun_nails)
Top Chord: 1 Row @12.00" o.c.
Bot Chord: 2 Rows @ 4.00" o.c. (Each Row)
Webs : 1 Row @ 4" o.c.
Repeat nailing as each layer is applied. Use equal spacing between rows and stagger nails in each row to avoid splitting.

Girder supports 34-4-0 span to BC one face and 2-0-0 span to TC/BC split opposite face.

City of Portland
REVIEWED FOR CODE COMPLIANCE
JUL 13 2005
Permit Number

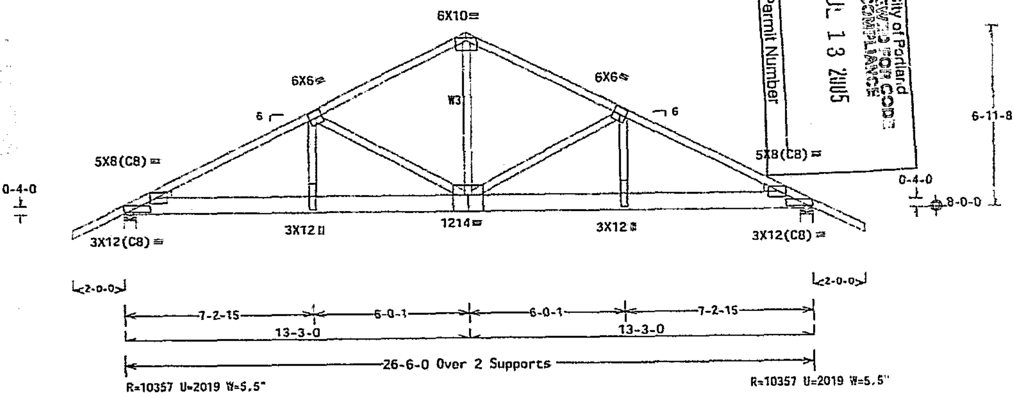

PLT TYP. Wave

Design Crit: TPI-2002(STD)/IBC 7.04.0805

OR/-/1/-/-/-/F

Scale =.25"/Ft.

True-Way, Inc 360-750-1470
3901 NE 68th St., Vancouver WA

ALPINE

Alpine Engineered Products, Inc.
Sacramento, CA 95828

WARNING TRUSSES REQUIRE EXTREME CARE IN FABRICATION, HANDLING, SHIPPING, INSTALLING AND BRACING. REFER TO BCSI 1-03 (BUILDING COMPONENT SAFETY INFORMATION), PUBLISHED BY TPI (TRUSS PLATE INSTITUTE, 583 D'ONOFRIO DR., SUITE 200, MADISON, WI 53719) AND WTCA (WOOD TRUSS COUNCIL OF AMERICA, 6300 ENTERPRISE LN, MADISON, WI 53719) FOR SAFETY PRACTICES PRIOR TO PERFORMING THESE FUNCTIONS. UNLESS OTHERWISE INDICATED, TOP CHORD SHALL HAVE PROPERLY ATTACHED STRUCTURAL PANELS AND BOTTOM CHORD SHALL HAVE A PROPERLY ATTACHED RIGID CEILING.

IMPORTANT FURNISH A COPY OF THIS DESIGN TO THE INSTALLATION CONTRACTOR. ALPINE ENGINEERED PRODUCTS, INC. SHALL NOT BE RESPONSIBLE FOR ANY DEVIATION FROM THIS DESIGN; ANY FAILURE TO BUILD THE TRUSS IN CONFORMANCE WITH TPI; OR FABRICATING, HANDLING, SHIPPING, INSTALLING & BRACING OF TRUSSES. DESIGN CONFORMS WITH APPLICABLE PROVISIONS OF NDS (NATIONAL DESIGN SPEC, BY AFPA) AND TPI. ALPINE CONNECTOR PLATES ARE MADE OF 20/18/16GA (W,H/S/K) ASTM A653 GRADE 40/60 (W, K/H,SS) GALV. STEEL. APPLY PLATES TO EACH FACE OF TRUSS AND, UNLESS OTHERWISE LOCATED ON THIS DESIGN, POSITION PER DRAWINGS 160A-Z. ANY INSPECTION OF PLATES FOLLOWED BY (I) SHALL BE PER ANNEX A3 OF TPI1-2002 SEC 3. A SEAL ON THIS DRAWING INDICATES ACCEPTANCE OF PROFESSIONAL ENGINEERING RESPONSIBILITY SOLELY FOR THE TRUSS COMPONENT DESIGN SHOWN. THE SUITABILITY AND USE OF THIS COMPONENT FOR ANY BUILDING IS THE RESPONSIBILITY OF THE BUILDING DESIGNER PER ANSI/TPI 1 SEC. 2.

14659
Jul 07 '05
CHRISTIAN W. CHAPPELL
EXP 12-31-05

TC LL	25.0 PSF	REF	R561-- 29350
TC DL	7.0 PSF	DATE	07/07/05
BC DL	10.0 PSF	DRW	CAUSR561 05188343
BC LL	0.0 PSF	CA-ENG	JRG/CWC
TOT.LD.	42.0 PSF	SEQN-	104972
DUR.FAC.	1.15	FROM	ATT
SPACING	24.0"	JREF-	1S0J561_Z18

THIS DWG PREPARED FROM COMPUTER INPUT (LOADS & DIMENSIONS) SUBMITTED BY TRUSS MFR.

(ENG14918-/ENGINEERING /BALDWIN 3720 -- . ** - 26-R)

Top chord 2x4 DF-L #1&Bet.(g)
Bot chord 1 DF-L #1&Bet.(g)
Webs x4 DF-L Standard(g)

Connectors in green lumber (g) designed using NDS/TPI reduction factors.

Deflection meets L/360 live and L/240 total load.

(*)In lieu of structural sheathing laterally brace inset top chord with purlins at 24" OC.

110 mph wind, 11.15 ft mean hgt, ASCE 7-98, CLOSED bldg, Located anywhere in roof, CAT II, EXP B, wind TC DL=5.2 psf, wind BC DL=7.0 psf.

Gable end supports 8" max rake overhang.

See DWGS A11015EC1103 & GBLLETIN0405 for more requirements.

10 psf non-concurrent bottom chord live load applied per ANSI/TPI-1.

City of Portland
REVIEWED FOR CODE COMPLIANCE
JUL 13 2005
Permit Number

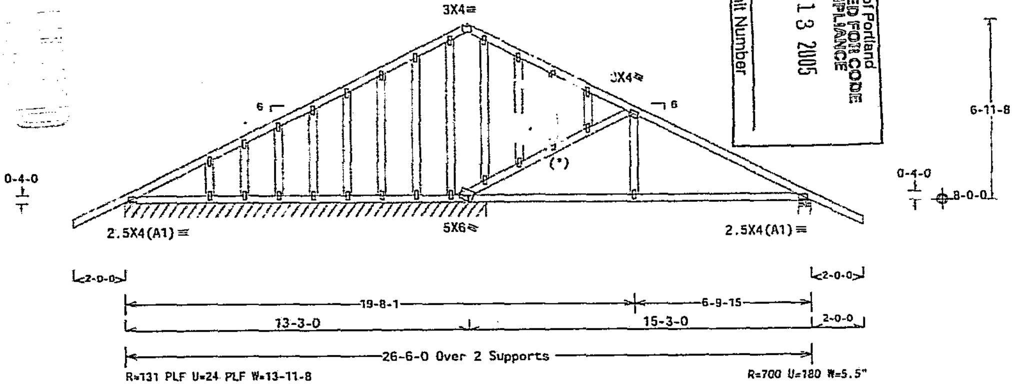

Note: All Plates Are 1.5X4 Except As Shown.

PLT TYP. Wave

Design Crit: TPI-2002(STD)/IBC 7.04.0805.15

OR/-/1/-/-/-/F

Scale =.25"/Ft.

Tru-Way, Inc 360-750-1470
3901 NE 68th St., Vancouver WA

ALPINE

Alpine Engineered Products, Inc.
Sacramento, CA 95828

WARNING TRUSSES REQUIRE EXTREME CARE IN FABRICATION, HANDLING, SHIPPING, INSTALLING AND BRACING. REFER TO BCSI 1-03 (BUILDING COMPONENT SAFETY INFORMATION), PUBLISHED BY TPI (TRUSS PLATE INSTITUTE, 583 D'ONOFRIO DR., SUITE 200, MADISON, WI 53719) AND WTCA (WOOD TRUSS COUNCIL OF AMERICA, 6300 ENTERPRISE LN, MADISON, WI 53719) FOR SAFETY PRACTICES PRIOR TO PERFORMING THESE FUNCTIONS. UNLESS OTHERWISE INDICATED, TOP CHORD SHALL HAVE PROPERLY ATTACHED STRUCTURAL PANELS AND BOTTOM CHORD SHALL HAVE A PROPERLY ATTACHED RIGID CEILING.

IMPORTANT FURNISH A COPY OF THIS DESIGN TO THE INSTALLATION CONTRACTOR. ALPINE ENGINEERED PRODUCTS, INC. SHALL NOT BE RESPONSIBLE FOR ANY DEVIATION FROM THIS DESIGN; ANY FAILURE TO BUILD THE TRUSS IN CONFORMANCE WITH TPI; OR FABRICATING, HANDLING, SHIPPING, INSTALLING & BRACING OF TRUSSES. DESIGN CONFORMS WITH APPLICABLE PROVISIONS OF NDS (NATIONAL DESIGN SPEC, BY AFPA) AND TPI. ALPINE CONNECTOR PLATES ARE MADE OF 20/18/16GA (W.H/SS/K) ASTM A653 GRADE 40/60 (W. K/H,SS) GALV. STEEL. APPLY PLATES TO EACH FACE OF TRUSS AND, UNLESS OTHERWISE LOCATED ON THIS DESIGN, POSITION PER DRAWINGS 160A-Z. ANY INSPECTION OF PLATES FOLLOWED BY (I) SHALL BE PER ANNEX A3 OF TPI1-2002 SEC.3. A SEAL ON THIS DRAWING INDICATES ACCEPTANCE OF PROFESSIONAL ENGINEERING RESPONSIBILITY SOLELY FOR THE TRUSS COMPONENT DESIGN SHOWN. THE SUITABILITY AND USE OF THIS COMPONENT FOR ANY BUILDING IS THE RESPONSIBILITY OF THE BUILDING DESIGNER PER ANSI/TPI 1 SEC. 2.

14659
OREGON
DEC. 7, 1989
CHRISTIAN W. CHAPPELL
EXP. 12-31-05

TC LL	25.0 PSF	REF R561-- 29351
TC DL	7.0 PSF	DATE 07/07/05
BC DL	10.0 PSF	DRW CAUSR561 05188344
BC LL	0.0 PSF	CA-ENG JRG/CWC
TOT.LD.	42.0 PSF	SEQN- 104975
DUR.FAC.	1.15	FROM ATT
SPACING	24.0"	JREF- 1S0J561_Z18

THIS DWG PREPARED FROM COMPUTER INPUT (LOADS & DIMENSIONS) SUBMITTED BY TRUSS MFR.

(ENG14916-/ENGINEERING /BALDWIN 3720 -- . ** - 34-C)

Top chord 2x4 DF-L #1&Bet.(g)
Bot chord 2x4 DF-L #1&Bet.(g)
Webs 2x4 DF-L Standard(g)

Connectors in green lumber (g) designed using NDS/TPI reduction factors.

110 mph wind, 12.13 ft mean hgt, ASCE 7-98, CLOSED bldg, Located anywhere in roof, CAT II, EXP B, wind TC DL=5.2 psf, wind BC DL=7.0 psf.

Deflection meets L/360 live and L/240 total load.

10 psf non-concurrent bottom chord live load applied per ANSI/TPI-1.

City of Portland
REVIEWED FOR CODE COMPLIANCE
JUL 13 2005
Permit Number

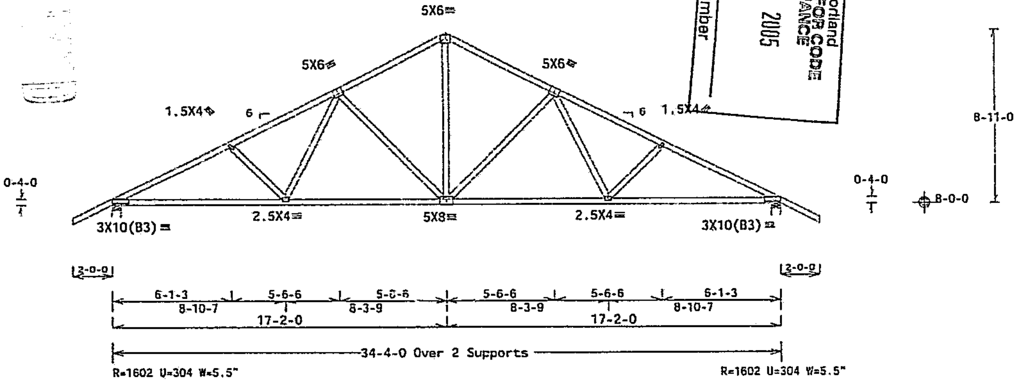

PLT TYP. Wave

Design Crit: TPI-2002(STD)/IBC 7.04.0805.15

OR/-/1/-/-/-/F

Scale =.1875"/Ft.

Trus-Way, Inc 360-750-1470
3901 NE 68th St., Vancouver WA

ALPINE

Alpine Engineered Products, Inc.
Sacramento, CA 95828

WARNING TRUSSES REQUIRE EXTREME CARE IN FABRICATION, HANDLING, SHIPPING, INSTALLING AND BRACING. REFER TO BCSI 1-03 (BUILDING COMPONENT SAFETY INFORMATION), PUBLISHED BY TPI (TRUSS PLATE INSTITUTE, 583 D'ONOFRIO DR., SUITE 200, MADISON, WI 53719) AND WTCA (WOOD TRUSS COUNCIL OF AMERICA, 6300 ENTERPRISE LN, MADISON, WI 53719) FOR SAFETY PRACTICES PRIOR TO PERFORMING THESE FUNCTIONS. UNLESS OTHERWISE INDICATED, TOP CHORD SHALL HAVE PROPERLY ATTACHED STRUCTURAL PANELS AND BOTTOM CHORD SHALL HAVE A PROPERLY ATTACHED RIGID CEILING.

IMPORTANT FURNISH A COPY OF THIS DESIGN TO THE INSTALLATION CONTRACTOR. ALPINE ENGINEERED PRODUCTS, INC. SHALL NOT BE RESPONSIBLE FOR ANY DEVIATION FROM THIS DESIGN; ANY FAILURE TO BUILD THE TRUSS IN CONFORMANCE WITH TPI; OR FABRICATING, HANDLING, SHIPPING, INSTALLING & BRACING OF TRUSSES. DESIGN CONFORMS WITH APPLICABLE PROVISIONS OF NDS (NATIONAL DESIGN SPEC, BY AFBPA) AND TPI. ALPINE CONNECTOR PLATES ARE MADE OF 20/18/16GA (W,H/S/K) ASTM A653 GRADE 40/60 (W, K/H,S) GALV. STEEL. APPLY PLATES TO EACH FACE OF TRUSS AND, UNLESS OTHERWISE LOCATED ON THIS DESIGN, POSITION PER DRAWINGS 160A-Z. ANY INSPECTION OF PLATES FOLLOWED BY (I) SHALL BE PER ANNEX A3 OF TPI1-2002 SEC.3. A SEAL ON THIS DRAWING INDICATES ACCEPTANCE OF PROFESSIONAL ENGINEERING RESPONSIBILITY SOLELY FOR THE TRUSS COMPONENT DESIGN SHOWN. THE SUITABILITY AND USE OF THIS COMPONENT FOR ANY BUILDING IS THE RESPONSIBILITY OF THE BUILDING DESIGNER PER ANSI/TPI 1 SEC. 3.

REGISTERED PROFESSIONAL ENGINEER
14055
JUL 07 '05
OREGON
DEC. 7, 1989
CHRISTIAN W. CHAPPELL
EXP. 12-31-05

TC LL	25.0 PSF	REF	R561-- 29352
TC DL	7.0 PSF	DATE	07/07/05
BC DL	10.0 PSF	DRW	CAUSR561 05188339
BC LL	0.0 PSF	CA-ENG	JRG/CWC
TOT.LD.	42.0 PSF	SEQN-	104980
DUR.FAC.	1.15	FROM	ATT
SPACING	24.0"	JREF-	1S0J561_Z18

THIS DWG PREPARED FROM COMPUTER INPUT (LOADS & DIMENSIONS) SUBMITTED BY TRUSS MFR.

(ENG14918-/ENGINEERING /BALDWIN   3720 -- . ** - 34-GE)

Top chord 2x4 DF-L #1&Bet.(g)
Bot chord 2x4 DF-L #1&Bet.(g)
Webs 2x4 DF-L Standard(g)

Connectors in green lumber (g) designed using NDS/TPI reduction factors.

(A) 1x4 #3 HEM-FIR or better continuous lateral bracing to be equally spaced. Attach with (2) 8d Box or Gun nails (0.113"x2.5" min.). Bracing material to be supplied and attached at both ends to a suitable support by erection contractor.

110 mph wind, 12.13 ft mean hgt, ASCE 7-98, CLOSED bldg, Located anywhere in roof, CAT II, EXP B, wind TC DL=5.2 psf, wind BC DL=7.0 psf.

Gable end supports 8" max rake overhang.

See DWGS A11015EC1103 & GBLLETIN0405 for more requirements.

Deflection meets L/360 live and L/240 total load.

10 psf non-concurrent bottom chord live load applied per ANSI/TPI-1.

City of Portland
REVIEWED FOR CODE COMPLIANCE
JUL 13 2005
Permit Number

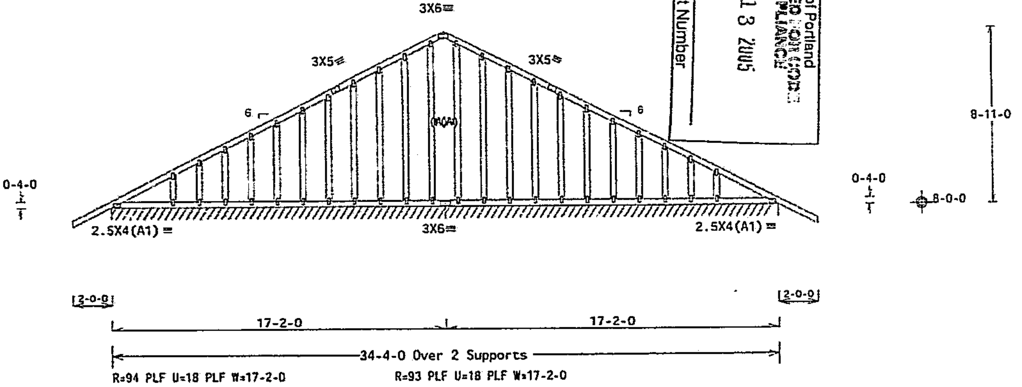

Note: All Plates Are 1.5X4 Except As Shown.

PLT TYP. Wave   Design Crit: TPI-2002(STD)/IBC   7.04.0805.15   OR/-/1/-/-/-/F   Scale =.1875"/Ft.

Trus-Way, Inc 360-750-1470
3901 NE 68th St, Vancouver WA

ALPINE

Alpine Engineered Products, Inc.
Sacramento, CA 95828

WARNING TRUSSES REQUIRE EXTREME CARE IN FABRICATION, HANDLING, SHIPPING, INSTALLING AND BRACING. REFER TO BCSI 1-03 (BUILDING COMPONENT SAFETY INFORMATION), PUBLISHED BY TPI (TRUSS PLATE INSTITUTE, 583 D'ONOFRIO DR., SUITE 200, MADISON, WI 53719) AND WTCA (WOOD TRUSS COUNCIL OF AMERICA, 6300 ENTERPRISE LN, MADISON, WI 53719) FOR SAFETY PRACTICES PRIOR TO PERFORMING THESE FUNCTIONS. UNLESS OTHERWISE INDICATED, TOP CHORD SHALL HAVE PROPERLY ATTACHED STRUCTURAL PANELS AND BOTTOM CHORD SHALL HAVE A PROPERLY ATTACHED RIGID CEILING.

IMPORTANT FURNISH A COPY OF THIS DESIGN TO THE INSTALLATION CONTRACTOR. ALPINE ENGINEERED PRODUCTS, INC. SHALL NOT BE RESPONSIBLE FOR ANY DEVIATION FROM THIS DESIGN; ANY FAILURE TO BUILD THE TRUSS IN CONFORMANCE WITH TPI; OR FABRICATING, HANDLING, SHIPPING, INSTALLING & BRACING OF TRUSSES. DESIGN CONFORMS WITH APPLICABLE PROVISIONS OF NDS (NATIONAL DESIGN SPEC, BY AF&PA) AND TPI. ALPINE CONNECTOR PLATES ARE MADE OF 20/18/16GA (W,H/S/K) ASTM A653 GRADE 40/60 (W, K/H,S) GALV. STEEL. APPLY PLATES TO EACH FACE OF TRUSS AND, UNLESS OTHERWISE LOCATED ON THIS DESIGN, POSITION PER DRAWINGS 160A-Z. ANY INSPECTION OF PLATES FOLLOWED BY (I) SHALL BE PER ANNEX A3 OF TPI1-2002 SEC.3. A SEAL ON THIS DRAWING INDICATES ACCEPTANCE OF PROFESSIONAL ENGINEERING RESPONSIBILITY SOLELY FOR THE TRUSS COMPONENT DESIGN SHOWN. THE SUITABILITY AND USE OF THIS COMPONENT FOR ANY BUILDING IS THE RESPONSIBILITY OF THE BUILDING DESIGNER PER ANSI/TPI 1 SEC. 2.

14059
JUL 07 05
OREGON
DEC. 7, 1989
CHRISTIAN W. CHAPPELL
EXP. 12-31-05

TC LL	25.0 PSF	REF R561-- 29353
TC DL	7.0 PSF	DATE 07/07/05
BC DL	10.0 PSF	DRW CAUSR561 05188345
BC LL	0.0 PSF	CA-ENG JRG/CWC
TOT.LD.	42.0 PSF	SEQN- 104984
DUR.FAC.	1.15	FROM ATT
SPACING	24.0"	JREF- 1S0J561_Z18

THIS DWG PREPARED FROM COMPUTER INPUT (LOADS & DIMENSIONS) SUBMITTED BY TRUSS MFR.

(ENG14918-/ENGINEERING /BALDWIN 3720 -- , "" - 34-C 0)

Top chord 2x4 DF-L #1&Bet.(g)
Bot chord 2x4 DF-L #1&Bet.(g)
Webs 2x4 DF-L Standard(g)

Connectors in green lumber (g) designed using NDS/TPI reduction factors. Hangers shall be installed after lumber has air-dried to 19% or less moisture content.

10 psf non-concurrent bottom chord live load applied per ANSI/TPI-1.

110 mph wind, 12.13 ft mean hgt, ASCE 7-98, CLOSED bldg, Located anywhere in roof, CAT II, EXP B, wind TC DL=5.2 psf, wind BC DL=7.0 psf.

H = recommended connection based on manufacturer tested capacities and calculations. Conditions may exist that require different connections than indicated. Refer to manufacturer publication for additional information.

Deflection meets L/360 live and L/240 total load.

City of Portland
REVIEWED FOR CODE COMPLIANCE
JUL 13 2005
Permit Number

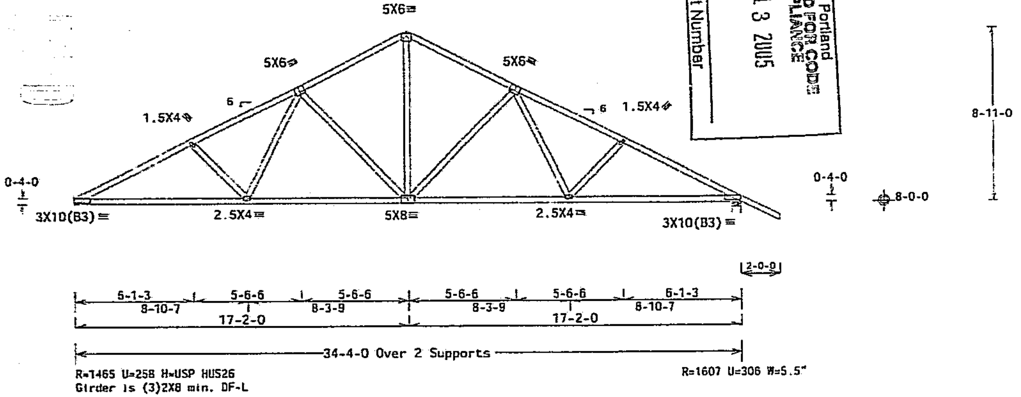

R=1465 U=258 H=USP HUS26
Girder is (3)2X8 min. DF-L

R=1607 U=306 W=5.5"

PLT TYP. Wave

Design Crit: TPI-2002(STD)/IBC 7.04.0805.1

Tru-Way, Inc 360-750-1470
3901 NE 68th St., Vancouver WA

ALPINE

Alpine Engineered Products, Inc.
Sacramento, CA 95828

WARNING TRUSSES REQUIRE EXTREME CARE IN FABRICATION, HANDLING, SHIPPING, INSTALLING AND BRACING. REFER TO BCSI 1-03 (BUILDING COMPONENT SAFETY INFORMATION), PUBLISHED BY TPI (TRUSS PLATE INSTITUTE, 583 D'ONOFRIO DR., SUITE 200, MADISON, WI 53719) AND WTCA (WOOD TRUSS COUNCIL OF AMERICA, 6300 ENTERPRISE LN, MADISON, WI 53719) FOR SAFETY PRACTICES PRIOR TO PERFORMING THESE FUNCTIONS. UNLESS OTHERWISE INDICATED, TOP CHORD SHALL HAVE PROPERLY ATTACHED STRUCTURAL PANELS AND BOTTOM CHORD SHALL HAVE A PROPERLY ATTACHED RIGID CEILING.

IMPORTANT FURNISH A COPY OF THIS DESIGN TO THE INSTALLATION CONTRACTOR. ALPINE ENGINEERED PRODUCTS, INC. SHALL NOT BE RESPONSIBLE FOR ANY DEVIATION FROM THIS DESIGN; ANY FAILURE TO BUILD THE TRUSS IN CONFORMANCE WITH TPI; OR FABRICATING, HANDLING, SHIPPING, INSTALLING & BRACING OF TRUSSES. DESIGN CONFORMS WITH APPLICABLE PROVISIONS OF NDS (NATIONAL DESIGN SPEC, BY AFANDPA) AND TPI. ALPINE CONNECTOR PLATES ARE MADE OF 20/18/16GA (W,H/S/K) ASTM A653 GRADE 40/60 (W, K/H,S) GALV. STEEL. APPLY PLATES TO EACH FACE OF TRUSS AND, UNLESS OTHERWISE LOCATED ON THIS DESIGN, POSITION PER DRAWINGS 160A-Z. ANY INSPECTION OF PLATES FOLLOWED BY (I) SHALL BE PER ANNEX A3 OF TPI1-2002 SEC.3. A SEAL ON THIS DRAWING INDICATES ACCEPTANCE OF PROFESSIONAL ENGINEERING RESPONSIBILITY SOLELY FOR THE TRUSS COMPONENT DESIGN SHOWN. THE SUITABILITY AND USE OF THIS COMPONENT FOR ANY BUILDING IS THE RESPONSIBILITY OF THE BUILDING DESIGNER PER ANSI/TPI 1 SEC. 2.

REGISTERED PROFESSIONAL ENGINEER
14659
Jul 07 05
OREGON
DEC. 7, 1989
CHRISTIAN W. CHAPPELL
EXP 12-31-05

OR/-/1/-/-/-/F

TC LL	25.0 PSF
TC DL	7.0 PSF
BC DL	10.0 PSF
BC LL	0.0 PSF
TOT.LD.	42.0 PSF
DUR.FAC.	1.15
SPACING	24.0"

Scale =.1875"/Ft.

REF	R561-- 29354
DATE	07/07/05
DRW	CAUSR561 05188346
CA-ENG	JRG/CWC
SEQN--	104987
FROM	ATT
JREF-	1S0J561_Z18