SET 3
Vol 2

GRAND AVENUE APARTMENTS

1010 NE GRAND AVE. PORTLAND, OR 97232

PERMIT SET - VOLUME II PLAN CHECK REVIEW



VIEW: SW CORNER - N.E. GRAND AVE. AND N.E. HOLLADAY STREET

GATR / PHB FUNDED PROJECT VERIFICATION

PROJECT NAME: BLOCK 45

PROJECT ADDRESS: 1010 - 1034 NE GRAND AVENUE

PHB SR. CONST COORDINATOR: FAEZ SOUD - 503.823.3771 - Faez.Soud@portlandoregon.gov

PROJECT SUMMARY

STREET ADDRESS: 1010 NE GRAND AVENUE, PORTLAND, OREGON 97232

PROJECT DESCRIPTION: CONSTRUCTION OF A NEW 12-STORY, 182,780 GSF MIXED-USE BUILDING WITH HOUSING OVER FIRST FLOOR MERCANTILE SPACE.

APPLICABLE CODES:
2014 OREGON STRUCTURAL SPECIALTY CODE, (OSSC),
OREGON ELEVATOR SPECIALTY CODE, (OESC)
IIC/ANSI 117.1-2009 ACCESSIBLE AND USABLE BUILDINGS AND FACITLITIES.
FAIR HOUSING ACT 1988 OSSC 1101.2.1 Maybe considered an alternate method for mulit-family dwellings if approved by the AHJ.
2014 OREGON MECHANICAL SPECIALTY CODE, (OMSC)
2014 OREGON ELECTRICAL SPECIALTY CODE (OESC)
2014 OREGON PLUMBING SPECIALTY CODE, (OPSC)
2014 OREGON ENERGY EFFICIENCY SPECIALTY CODE, (OEESC)
2014 INTERNATIONAL FIRE CODE
NATIONAL FIRE PROTECTION ASSOCIATION (NFPA)

ZONING INFORMATION

ZONE: CX - Central Commercial

OVERLAY: d - DESIGN ZONE

PLAN DISTRICT: LLOYD DISTRICT

LOADING & UNLOADING: SEE SHEET A101 FOR LOADING AREA

TRASH / RECYCLING AREA: INTERNAL TO BUILDING

FLOOR AREA RATIOS: FAR (in Central City Plan District)

MAXIMUM ALLOWED:	12:1
PROPOSED FAR:	10:1

HEIGHT LIMITATIONS:

MAXIMUM ALLOWED:	250'
PROVIDED HEIGHT:	134' (TOP OF MECH. PENTHOUSE)

BICYCLE PARKING:

REQUIRED LONG TERM COMMERCIAL:	2
REQUIRED LONG TERM RESIDENTIAL:	360
TOTAL REQUIRED LONG TERM:	362
PROVIDED LONG TERM:	**364**
REQUIRED SHORT TERM COMMERCIAL:	2
REQUIRED SHORT TERM RESIDENTAIL:	12
TOTAL REQUIRED SHORT TERM:	14
PROVIDED SHORT TERM:	**16**

DESIGN COMMISSION DECISIONS LU 16-287287 DZM

APPROVAL OF THE FOLLOWING ADDITIONAL REVIEWS:

1. **MODIFICATION** TO LONG-TERM BIKE PARKING STANDARDS (33.266.220) APPROVED, SEE SHEETS A100i AND A101i FOR FURTHER INFORMATION.
2. **EXCEPTION** TO WINDOW PROJECTIONS INTO THE RIGHT-OF-WAY (OSSC/32/#1) APPROVED.
3. **NON-STANDARD IMPROVEMENTS** IN THE RIGHT-OF-WAY ALONG GRAND AVENUE TO INCLUDE CONTINUOUS LANDSCAPE AND BENCHES IN THE FURNISHING ZONE, SEE SHEET A001 AND LANDSCAPE PLANS FOR FURTHER INFORMATION.

APPROVAL CONDITIONS:

A. ZONING COMPLIANCE PAGES - ARE LABELED AS 'REQUIRED' - NO FIELD CHANGES ALLOWED.
LANDSCAPE SHEETS [L100, L400, L510]
ARCHITECTURAL SHEETS [A001, A501, A502, A503, A504]

B. CERTIFICATE OF COMPLIANCE FORM SUBMITTED WITH PLAN REVIEW SUBMITTAL.

C. NO FIELD CHANGES ALLOWED - NOTED ON THE SHEETS LISTED ABOVE UNDER ITEM 'A'.

D. PERFORATED STEEL WILL SCREEN THE MECHANICAL UNITS LOCATED BEHIND.
ARCHITECTURAL SHEETS [A501, A502, A503, A955, A956]

E. AT THE TWO WEST BUILDING CORNERS, THE MORTAR SHALL NOT BE EXPOSED AT THE ACUTE CORNER, AND AT THE TWO EAST BUILDING CORNERS, THE GAP WHERE THE THIN BRICK MEETS THE METAL TRIM SHALL BE LESS THAT 1 3/4".
ARCHITECTURAL SHEETS [A955, A956]

LEGAL DESCRIPTION

PROPERY ID: R182139

STATE ID: 1N1E35BB 3500

ALT. ACCOUNT #: R396200550

LOT AREA: 18,321 SF

Plumbing Division
Bureau of Development Services
City of Portland
This drawing is approved for Construction; Errors and Omissions Excepted.
Date 9/29/17
Per PRice
These Plans and Specifications Shall be kept on the Work Under Construction

DEFERRED SUBMITTALS

1. CURTAIN WALL
2. POST TENSIONING
3. STEEL STAIR & HANDRAILS
4. FIRE & LIFE SAFETY SUMMARY BINDER

Plumbing Plan Required
2014 Oregon Plumbing
Specialty Code 103.2.2

NOTES:
1. SEE SPECIFICATION SECTION 01 3333 FOR DELEGATED DESIGN COMPONENTS
2. DEFERRED SUBMITTALS SHALL BE SUBMITTED TO THE CITY 30 DAYS PRIOR TO START OF WORK.

SEPARATE PERMITS

DISCIPLINE	EQUIPMENT TAG / GROUP	DESCRIPTION	WEIGHT	SUBMITTED	INSPECTOR CHECK
MECHANICAL SYSTEMS					
EQUIPMENT					●
ANCHORAGE & SUPPORT					
ELECTRICAL SYSTEMS					
EQUIPMENT					●
ANCHORAGE & SUPPORT					
PLUMBING SYSTEMS					
EQUIPMENT					●
ANCHORAGE & SUPPORT					
SHORING					
PILINGS					

NOTE: **MECHANICAL, ELECTRICAL & PLUMBING** TO PROVIDE ITEMIZED LIST OF EQUIPMENT & ANCHORAGE TO BE SUBMITTED TO THE CITY FOR REVIEW PRIOR TO EQUIPMENT INSTALLATION. EXPAND THE LIST / ADJACENT TABLE AS NECESSARY TO INCLUDE ALL ITEMS TO BE SUBMITTED.
PROVIDE SUBMITTAL TO CITY 30 DAYS PRIOR TO START OF WORK.

TO BE OBTAINED BY THE FIRE MARSHAL'S OFFICE: 1300 SE GIDEON STREET
1. FIRE SPRINKLER SYSTEM
2. UNDERGROUND FIRELINE PIPING
3. FIRE ALARM SYSTEM
4. FIRE PUMPS
5. DIESEL TANKS FOR GENERATOR
6. KNOXBOX

NOTE: THE FIRE CODE OFFICIAL HAS APPROVED THE 'KNOXBOX' AS THE ACCESS KEY BOX FOR USE IN THE CITY OF PORTLAND.

SEPARATE PERMIT NOTES:
1. ANY INSTALLATION DETAILS FOR FIRE AND LIFE SAFETY SYSTEMS ARE FOR REFERENCE ONLY. THIS INCLUDES: FIRE SPRINKLERS, FIRE ALARM SYSTEMS, FIRE PUMPS, UNDERGROUND FIRE LINES, FIXED EXTINGUISHING SYSTEMS, IN-BUILDING RADIO ENHANCEMENT SYSTEM (DAS), STATIONARY GENERATORS, AND HAZARDOUS MATERIAL TANKS AND RELATED EQUIPMENT. FINAL INSTALLATION REQUIREMENTS TO BE DETERMINED DURING THE TRADE PLAN REVIEW PROCESS AT THE FIRE MARSHAL'S OFFICE.

VICINITY MAP



NOT TO SCALE

N
True North

PROJECT DIRECTORY

OWNER

HOME FORWARD
135 SW Ash St
Portland, Oregon 97204
CONTACT PERSON: Julie Livingston
Julie.Livingston@homeforward.org
www.homeforward.org
t: 503.802.8424
f: 503.802.8579

PORTLAND HOUSING BUREAU
421 SW 6th, Suite 500
Portland, Oregon 97204
CONTACT PERSON: Faez Soud
Faez.Soud@portlandoregon.gov
www.portlandoregon.gov
t: 503.823.3771
f: NA

GENERAL CONTRACTOR

O'NEILL / WALSH BUILDERS
2905 SW 1st Ave
Portland, Oregon 97201
CONTACT PERSON: Ali O'Neill / Dan Snow
ali@oneillconstructiongroup.com
dsnow@walshconstruction.com
t: 503.219.2941
f: 503.274.7676

ARCHITECT OF RECORD

LRS ARCHITECTS
720 NW Davis Street, Suite 300
Portland, Oregon 97209
CONTACT PERSON: Michael Stanner
mstanner@lrsarchitects.com
www.lrsarchitects.com
t: 503.265.1555
f: 503.221.2077

DESIGN ARCHITECT

LEVER ARCHITECTS
4713 N. Albina Avenue, 4th Floor
Portland, Oregon 97217
CONTACT PERSON: Doug Sheets
doug@leverarchitecture.com
www.leverarchitecture.com
t: 503.928.6040
f: NA

CIVIL

DOWL
720 SW Washington St, Suite 750
Portland, Oregon 97205
CONTACT PERSON: Jeff Shoemaker
jshoemaker@dowl.com
www.dowl.com
t: 971.280.8641
f: 800.865.9847

LANDSCAPE

PLACE STUDIO
735 NW 18th Ave
Portland, Oregon 97209
CONTACT PERSON: Colleen Wolfe
colleen.wolfe@place.la
www.place.la
t: 503.334.2084
f: NA

STRUCTURAL

KPFF ENGINEERS
111 SW 5th Ave #2500
Portland, Oregon 97204
CONTACT PERSON: Jeff Diephuis
jeff.diephuis@kpff.com
www.kpff.com
t: 503.764.0532
f: NA

MECHANICAL - ON SEPARATE PERMIT

ANDERSEN MECHANICAL
16285 SW 85th Avenue, #410
Tigard, Oregon 97224
CONTACT PERSON: Mark Gerstlauer
mark@andersenmechanical.com
www.andersenheating.com
t: 503.348.7768
f: 503.536.6815

ELECTRICAL

EC COMPANY
2121 NW Thurman
Portland, Oregon 97210
CONTACT PERSON: Ryan Murphree
ryanmu@e-c-co.com
www.ecpowerslife.com
t: 503.577.3841
f: 503.220.3540

PLUMBING

PENINSULA PLUMBING CO.
13520 SE Division Street
Portland, Oregon 97236
CONTACT PERSON: Mark Wright
mark@peninsulaplumbing.com
www.peninsulaplumbing.com
t: 503.761.0500
f: 503.760.1900

LIGHTING DESIGN

BIELLA LIGHTING
715 SW Morrison St, Suite 602
Portland, Oregon 97205
CONTACT PERSON: Ella Mills
mills@biellalighting.com
www.biellalighting.com
t: 503.810.2848
f: 503.227.5644

FIRE PROTECTION

CROWN FIRE SYSTEMS
7402 SE Johnson Creek Blvd.
Portland, Oregon 97206
CONTACT PERSON: Richard Gordon
richard@crownfiresystems.com
www.crownfiresystems.com
t: 503.358.6011
f: 503.777.0659

ACOUSTICS

A3 ACOUSTICS
241 South Lander St, Suite 200
Seattle, Washington 98134
CONTACT PERSON: Erik Miller-Klein
erik@a3acoustics.com
Company URL
t: 206.792.7796
f: NA

ENVELOPE

MORRISON HERSHFIELD
5100 SW Macadam Ave, # 500
Portland, Oregon 97239
CONTACT PERSON: Claude Louvouezo
plouvouezo@morrisonhershfield.com
www.morrisonhershfield.com
t: 503.924.2518
f: NA

INTERIORS

OPEN STUDIO COLLECTIVE
2710 N. Interstate Ave.
Portland, Oregon 97227
CONTACT PERSON: Cecily Ryan
cecily@openstudiocollective.com
www.openstudiocollective.com
t: 503.869.5688
f: NA

SURVEY

W. B. WELLS & ASSOCIATES
6130 NE 78th Court, Suite C-11
Portland, Oregon 97218
CONTACT PERSON: Alainna Jefferson
alainna@wbwells.com
www.wbwells.com
t: 503.284.5896
f: 503.284.8530

GEOTECHNICAL

GRI
9750 SW Nimbus Ave
Beaverton, Oregon 97008
CONTACT PERSON: Nick Hatch
nhatch@gri.com
www.gri.com
t: 503.641.3478
f: 503.708.5332

RADON

RADON GREEN, LLC
3449 SE Sherman St.
Portland, Oregon 97214
CONTACT PERSON: Steve Tucker
radongreen@gmail.com
t: 503.686.9051
f: 503.421.4813

PILING FOUNDATION

PACIFIC FOUNDATION
7206 NE 47th Ave.
Vancouver, Washington 98661
CONTACT PERSON: Michael Zeman
mzeman@pacific-foundation.com
t: 360.907.3481
f: 360.200.6611

AHJ

PORTLAND BDS
1900 SW 4th Ave., Suite 5000
Portland, Oregon 97201
CONTACT PERSON: Mary Pat Gardner
marypat.gardner@portlandoregon.gov
www.portlandoregon.gov/bds
t: 503.823.7452
f: NA

LRS ARCHITECTS
720 NW Davis 503.221.1121
Suite 300 503.221.2077
Portland OR 97209 www.lrsarchitects.com

REGISTERED ARCHITECT
THOMAS PAUL STANNER
PORTLAND, OR
STATE OF OREGON

LEVERARCHITECTURE
4713 N ALBINA AVE, PDX OR 97217
T 503 928 6040
www.leverarchitecture.com

Vol-2
SCAN
3

215349

GRAND AVENUE APARTMENTS

1010 NE GRAND AVE. PORTLAND, OR 97232

GRAND AVENUE APARTMENTS - PHB
17-204627-CO

Set 3 Vol 2
STR/MEP
AX 17.1

DRAWN BY: Author
DATE CREATED: 05/05/17

1	ADDENDUM #01	08/11/2017
A	PLAN CHECK	09/01/2017

AX 17.1

City of Portland REVIEWED FOR CODE COMPLIANCE DEC 28 2017 17-204627-CO Permit Number

RECEIVED SEP 06 2017 BDS DOCUMENT SERVICES

SHEET:
CS-2
PERMIT SET
07-14-2017

LRS Architects, Inc. ©2017

C:\300 Revit Local Files\BIM Support\215349_Grand Ave Apts_Arch_R17_kschneider.rvt
9/5/2017 3:38:37 PM

GRAND AVENUE APARTMENTS

1010 NE GRAND AVE. PORTLAND, OR 97232

PERMIT SET - VOLUME II

DRAWING INDEX LEGEND

▫ ISSUED / DELETED
• REVISED ® ISSUED FOR REFERENCE ONLY

SHEET INDEX - VOLUME I

Sheet Number	Sheet Name	PERMIT SET (07.14.2017)	ADDENDUM #01 (08.11.2017)	PLAN CHECK-A (09.01.2017)
ARCHITECTURAL				
CS-1	COVER SHEET - VOLUME I	▫	▫	▫
CS-1a	SHEET INDEX	▫	▫	▫
CS-2	COVERS SHEET - VOLUME II	▫	▫	▫
CS-2a	SHEET INDEX	▫	▫	▫
CIVIL				
C001	EXISTING CONDITIONS AND DEMOLITION PLAN	▫	▫	▫
C002	CIVIL SITE AND UTILITY PLAN	▫	▫	▫
C003	CIVIL GRADING PLAN	▫	▫	▫
C004	CIVIL DETAILS	▫	▫	▫
LANDSCAPE				
L100	MATERIALS PLAN	▫	▫	
L200	LAYOUT PLAN	▫	▫	
L300	DESIGN-BUILD IRRIGATION PLAN	▫	▫	
L400	PLANTING PLAN	▫	▫	
L510	LANDSCAPE DETAILS	▫		
L520	LANDSCAPE DETAILS	▫		
L530	LANDSCAPE DETAILS	▫	▫	
L540	PLANTING DETAILS	▫		
ARCHITECTURAL				
A|	ARCHITECTURAL SYMBOLS AND ABBREVIATIONS	▫		▫
A001	ARCHITECTURAL SITE PLAN	▫	▫	▫
A002	ARCHITECTURAL - ENLARGED SITE PLANS	▫	▫	▫
A100	CODE INFORMATION	▫		▫
A101	CODE INFORMATION	▫		▫
A100	BASEMENT LEVEL CODE ANALYSIS PLAN	▫		▫
A101	LEVEL 1 CODE ANALYSIS PLAN	▫		▫
A102	LEVEL 2 CODE ANALYSIS PLAN	▫		▫
A103	LEVELS 3 - 11 CODE ANALYSIS PLAN	▫		▫
A104	LEVEL 12 CODE ANALYSIS PLAN	▫		▫
A105	ROOF LEVEL CODE ANALYSIS PLAN	▫		▫
A150	WALL TYPES	▫	▫	▫
A151	HORIZONTAL ASSEMBLIES & ACOUSTICAL MATRIX	▫	▫	
A170	PENETRATION ASSEMBLIES	▫		
A201a	LEVEL 1 SLAB PLAN	▫	▫	
A201b	LEVEL 1 ENLARGED SLAB PLANS	▫	▫	
A201c	LEVEL 1 SLAB PLAN PROFILES	▫	▫	
A202a	LEVEL 2 SLAB PLAN	▫		
A203a	LEVEL 3 -6 SLAB PLANS	▫		
A207a	LEVEL 7-12 SLAB PLANS	▫		
A200	BASEMENT LEVEL - FLOOR PLAN	▫	▫	
A201	LEVEL 1 - FLOOR PLAN	▫	▫	▫
A202	LEVEL 2 - FLOOR PLAN	▫		
A203	LEVEL 3 - FLOOR PLAN	▫		
A204	LEVEL 4 - FLOOR PLAN	▫		
A205	LEVEL 5 - FLOOR PLAN	▫		
A206	LEVEL 6 - FLOOR PLAN	▫		
A207	LEVEL 7 - FLOOR PLAN	▫		
A208	LEVEL 8 - FLOOR PLAN	▫		
A209	LEVEL 9 - FLOOR PLAN	▫		
A210	LEVEL 10 - FLOOR PLAN	▫		
A211	LEVEL 11 - FLOOR PLAN	▫		
A212	LEVEL 12 - FLOOR PLAN	▫		
A250	ENLARGED STAIR PLANS AND SECTIONS	▫	▫	▫
A251	ENLARGED STAIR PLANS AND SECTIONS	▫	▫	▫
A252	ENLARGED STAIR PLANS AND SECTIONS	▫		▫
A253	SOUTH ELEVATOR #01 ENLARGED PLANS	▫		
A254	SOUTH ELEVATOR #01 SECTIONS	▫	▫	
A255	NORTH ELEVATOR #02 ENLARGED PLANS	▫		
A256	NORTH ELEVATOR #02 SECTIONS	▫	▫	
A260	UNIT PLAN AND RCP - TYPE A UNITS	▫	▫	▫
A261	UNIT PLANS AND RCP	▫	▫	▫
A262	UNIT PLANS AND RCP	▫	▫	▫
A263	UNIT PLANS AND RCP	▫	▫	▫
A264	UNIT PLANS AND RCP	▫	▫	▫
A265	UNIT PLANS AND RCP	▫	▫	▫
A266	UNIT PLANS AND RCP	▫	▫	▫
A267	UNIT PLANS AND RCP	▫	▫	▫
A268	UNIT PLANS AND RCP	▫	▫	▫
A270	ENLARGED FLOOR PLANS	▫	▫	
A271	ENLARGED FLOOR PLANS	▫	▫	
A300a	ROOF SLAB PLAN	▫	▫	
A300	ROOF LEVEL PLAN	▫	▫	▫

SHEET INDEX - VOLUME I

Sheet Number	Sheet Name	PERMIT SET (07.14.2017)	ADDENDUM #01 (08.11.2017)	PLAN CHECK-A (09.01.2017)
A400	BASEMENT LEVEL - REFLECTED CEILING PLAN	▫		
A401	LEVEL 1 - REFLECTED CEILING PLAN	▫	▫	
A401a	LEVEL-1 REFLECTED CEILING PLAN - INSUL. EXTENTS	▫	▫	
A402	LEVEL 2 - REFLECTED CEILING PLAN	▫	▫	
A403	LEVEL 3 - REFLECTED CEILING PLAN	▫	▫	
A404	LEVEL 4 - REFLECTED CEILING PLAN	▫	▫	
A405	LEVEL 5 - REFLECTED CEILING PLAN	▫	▫	
A406	LEVEL 6 - REFLECTED CEILING PLAN	▫	▫	
A407	LEVEL 7 - REFLECTED CEILING PLAN	▫	▫	
A408	LEVEL 8 - REFLECTED CEILING PLAN	▫	▫	
A409	LEVEL 9 - REFLECTED CEILING PLAN	▫	▫	
A410	LEVEL 10 - REFLECTED CEILING PLAN	▫	▫	
A411	LEVEL 11 - REFLECTED CEILING PLAN	▫	▫	
A412	LEVEL 12 - REFLECTED CEILING PLAN	▫	▫	
A501	EXTERIOR ELEVATIONS	▫	▫	▫
A502	EXTERIOR ELEVATIONS	▫	▫	▫
A503	EXTERIOR ELEVATIONS	▫	▫	▫
A504	EXTERIOR ELEVATIONS	▫	▫	▫
A505	EXTERIOR ELEVATIONS	▫	▫	
A506	PARTIAL EXTERIOR ELEVATIONS	▫	▫	▫
A507	PARTIAL EXTERIOR ELEVATIONS	▫	▫	▫
A508	PARTIAL EXTERIOR ELEVATIONS	▫	▫	
A510	ENLARGED EXTERIOR ELEVATIONS	▫	▫	
A601	BUILDING SECTIONS	▫		▫
A602	BUILDING SECTIONS	▫	▫	▫
A603	BUILDING SECTIONS	▫		▫
A604	BUILDING SECTIONS	▫	▫	▫
A605	WALL SECTIONS	▫	▫	▫
A606	WALL SECTIONS	▫	▫	▫
A607	WALL SECTIONS	▫	▫	▫
A608	WALL SECTIONS	▫	▫	▫
A609	WALL SECTIONS	▫	▫	▫
A610	WALL SECTIONS	▫	▫	
A611	WALL SECTIONS	▫	▫	▫
A612	WALL SECTIONS	▫	▫	▫
A613	WALL SECTIONS	▫	▫	▫
A614	WALL SECTIONS	▫	▫	
A700	DOOR SCHEDULE & TYPES	▫	▫	▫
A701	WINDOW SCHEDULES & TYPES	▫	▫	▫
A702	EXTERIOR GATE	▫		▫
A703	WINDOW LAYOUT PLAN - LEVEL 2	▫		
A704	WINDOW LAYOUT PLAN - LEVELS 3, 5, 7, 9 & 11	▫		
A705	WINDOW LAYOUT PLAN - LEVELS 4, 6, 8, 10 & 12	▫		
A801	INTERIOR FINISH SCHEDULE	▫	▫	▫
A802	INTERIOR FINISH PLANS	▫		
A870	UNIT KITCHEN TYPES	▫	▫	
A871	UNIT BATHROOM LAYOUTS - TYPE A	▫		▫
A872	UNIT BATHROOM LAYOUTS - TYPE B	▫		▫
A873	UNIT BATH	▫		▫
A874	UNIT BATH	▫		▫
A878	INTERIOR ELEVATIONS	▫	▫	
A879	INTERIOR ELEVATIONS	▫	▫	
A880	INTERIOR ELEVATIONS	▫		▫
A881	INTERIOR ELEVATIONS	▫		
A882	INTERIOR ELEVATIONS	▫		▫
A883	DOOR GRAPHICS	▫		
A910	CODE DETAILS	▫		
A911	CODE DETAILS	▫	▫	▫
A920	FLOOR PLAN DETAILS	▫	▫	
A921	FLOOR PLAN DETAILS	▫		
A930	ROOF DETAILS	▫		▫
A940	REFLECTED CEILING PLAN DETAILS	▫		▫
A950	EXTERIOR DETAILS	▫	▫	▫
A951	EXTERIOR DETAILS	▫	▫	▫
A952	EXTERIOR DETAILS	▫	▫	▫
A953	EXTERIOR DETAILS	▫	▫	▫
A954	EXTERIOR DETAILS	▫	▫	▫
A955	APARTMENT WINDOW DETAILS	▫	▫	▫
A956	APARTMENT WINDOW DETAILS	▫	▫	▫
A957	APARTMENT WINDOW DETAILS	▫	▫	
A960	SECTION DETAILS	▫	▫	▫
A962	STAIR DETAILS	▫		
A963	STAIR DETAILS	▫		▫
A964	ELEVATOR DETAILS	▫		▫
A970	EXTERIOR DOOR DETAILS	▫	▫	▫
A971	EXTERIOR DOOR PLAN DETAILS	▫		▫
A972	EXTERIOR SECTION DETAILS AT LOADING DOCK	▫	▫	▫
A973	EXTERIOR SECTION DETAILS AT LOADING DOCK & ALLEYWAY	▫	▫	▫
A974	INTERIOR DOOR DETAILS	▫		
A975	VINYL WINDOW FLASHING SEQUENCE	▫	▫	
A976	ENLARGED EXTERIOR DETAILS	▫	▫	
A977	ENLARGED EXTERIOR DETAILS	▫	▫	
A980	INTERIOR DETAILS	▫	▫	▫
A981	INTERIOR CASEWORK DETAILS	▫	▫	
A982	LOBBY BENCH DETAILS	▫		

SHEET INDEX - VOLUME II

Sheet Number	Sheet Name	PERMIT SET (07.14.2017)	ADDENDUM #01 (08.11.2017)	PLAN CHECK-A (09.01.2017)
STRUCTURAL				
S001	DRAWING INDEX AND LIST OF ABBREVIATIONS	▫	▫	▫
S002	GENERAL STRUCTURAL NOTES	▫	▫	▫
S003	GENERAL STRUCTURAL NOTES CONT.	▫		▫
S004	SPECIAL INSPECTIONS AND TESTING	▫		
S005	SPECIAL INSPECTIONS AND TESTING CONT.	▫		
S010	LOADING PLANS	▫		▫
S200	BASEMENT FOUNDATION PLAN	▫		▫
S201	FIRST FLOOR FOUNDATION PLAN	▫		▫
S201A	FIRST FLOOR SLAB PLAN	▫		
S202	SECOND FLOOR PLAN	▫		▫
S202P	SECOND FLOOR POST-TENSIONING PLAN	▫		▫
S202R	SECOND FLOOR REINFORCING PLAN	▫		▫
S203	THIRD - TWELFTH FLOOR PLAN	▫		▫
S203P	THIRD - TWELFTH FLOOR POST-TENSIONING PLAN	▫		▫
S203R	THIRD - TWELFTH FLOOR REINFORCING PLAN	▫		▫
S213	ROOF PLAN	▫		▫
S213P	ROOF POST-TENSIONING PLAN	▫		▫
S213R	ROOF REINFORCING PLAN	▫		▫
S220	PENTHOUSE FRAMING PLANS AND DETAILS	▫		
S301	SHEAR WALL ELEVATIONS	▫		
S302	SHEAR WALL ELEVATIONS	▫		▫
S303	SHEAR WALL ELEVATIONS	▫		▫
S304	SHEAR WALL ELEVATIONS	▫		
S305	BOUNDARY ELEMENTS	▫		▫
S401	CONCRETE COLUMN SCHEDULE AND DETAILS	▫		▫
S402	PILASTER DETAILS	▫		
S501	AUGER-CAST PILE DETAILS	▫		▫
S502	AUGER-CAST PILE, GRADE BEAM AND PILE CAP DETAILS	▫		▫
S503	CONCRETE DETAILS	▫	▫	▫
S504	CONCRETE DETAILS	▫		▫
S520	POST TENSIONING DETAILS	▫		
S521	POST TENSIONING DETAILS	▫		▫
S522	STUD RAIL DETAILS	▫		▫
S530	MASONRY DETAILS	▫		
S601	STEEL DETAILS	▫		
S701	EXTERIOR FRAMING ELEVATIONS	▫	▫	▫
S702	EXTERIOR FRAMING ELEVATIONS	▫	▫	▫
S703	EXTERIOR FRAMING ELEVATIONS	▫		
S704	EXTERIOR FRAMING ELEVATIONS	▫		
S705	EXTERIOR FRAMING SECTIONS	▫	▫	▫
S706	TYPICAL CLADDING DETAILS	▫	▫	▫
MECHANICAL				
M001	MECHANICAL COVER SHEET	▫		▫
M200	BASEMENT FLOOR PLAN	▫		
M201	FIRST FLOOR PLAN	▫		▫
M202	SECOND FLOOR PLAN	▫		▫
M203	THIRD FLOOR PLAN	▫		▫
M204	FOURTH FLOOR PLAN	▫		▫
M205	FIFTH FLOOR PLAN	▫		▫
M206	SIXTH FLOOR PLAN	▫		▫
M207	SEVENTH FLOOR PLAN	▫		▫
M208	EIGHTH FLOOR PLAN	▫		▫
M209	NINTH FLOOR PLAN	▫		▫
M210	TENTH FLOOR PLAN	▫		▫
M211	ELEVENTH FLOOR PLAN	▫		▫
M212	TWELFTH FLOOR PLAN	▫		▫
M301	ROOF PLAN	▫		▫
M601	MECHANICAL DETAILS	▫		▫
M602	MECHANICAL DETAILS	▫		▫
ELECTRICAL				
E000	ELECTRICAL LEGEND AND ABBREVIATIONS	▫		
E001	ELECTRICAL SCHEDULES	▫	▫	▫
E002	LUMINAIRE SCHEDULE	▫		
E101	ELECTRICAL SITE PLAN	▫		
E300	BASEMENT ELECTRICAL FLOOR PLAN	▫		
E301	LEVEL 1 ELECTRICAL FLOOR PLAN	▫		
E302	LEVEL 2-6, 8-10 ELECTRICAL FLOOR PLAN	▫	▫	
E307	LEVEL 7 ELECTRICAL FLOOR PLAN	▫	▫	
E311	LEVEL 11 ELECTRICAL FLOOR PLAN	▫		
E312	LEVEL 12 ELECTRICAL FLOOR PLAN	▫		
E313	ROOF ELECTRICAL PLAN	▫		
E401	ENLARGED ELECTRICAL PLAN	▫		
E501	TYPICAL ENLARGED UNIT PLANS	▫		
E502	TYPICAL ENLARGED UNIT PLANS	▫		
E503	TYPICAL ENLARGED UNIT PLANS	▫		
E601	ELECTRICAL SINGLE-LINE DIAGRAM	▫	▫	
E602	ELECTRICAL GROUNDING RISER	▫		
E701	PANEL SCHEDULES	▫		▫
E702	PANEL SCHEDULES	▫	▫	
E901	ELECTRICAL DETAILS	▫		

SHEET INDEX - VOLUME II

Sheet Number	Sheet Name	PERMIT SET (07.14.2017)	ADDENDUM #01 (08.11.2017)	PLAN CHECK-A (09.01.2017)
PLUMBING				
P001	PLUMBING INDEX / NOTES / CALCS	▫		
P002	PLUMBING DETAILS & SCHEDULES	▫		▫
P003	PLUMBING - DETAILS	▫		
P004	EMERGENCY GENERATOR - DETAILS			▫
P005	EMERGENCY GENERATOR - DETAILS			▫
P200	BASEMENT PLUMBING PLAN	▫		▫
P201	FIRST FLOOR PLUMBING PLAN	▫		▫
P202	SECOND FLOOR PLUMBING PLAN	▫		▫
P203	THIRD FLOOR PLUMBING PLAN	▫		▫
P204	FOURTH FLOOR PLUMBING PLAN	▫		▫
P205	FIFTH FLOOR PLUMBING PLAN	▫		▫
P206	SIXTH FLOOR PLUMBING PLAN	▫		▫
P207	SEVENTH FLOOR PLUMBING PLAN	▫		▫
P208	EIGHTH FLOOR PLUMBING PLAN	▫		▫
P209	NINTH FLOOR PLUMBING PLAN	▫		▫
P210	TENTH FLOOR PLUMBING PLAN	▫		▫
P211	ELEVENTH FLOOR PLUMBING PLAN	▫		▫
P212	TWELFTH FLOOR PLUMBING PLAN	▫		▫
P300	ROOF PLUMBING PLAN	▫		
P400	PLUMBING RISERS - WATER	▫		▫
P401	PLUMBING RISERS - WASTE & VENT	▫		
FIRE PROTECTION				
FP-0	GEN NOTES & DETAILS	▫		
FP-B	BASEMENT FIRE SPRINKLER PLAN	▫		
FP-1	1ST FL FIRE SPRINKLER PLAN	▫		
FP-2	2ND FL FIRE SPRINKLER PLAN	▫		
FP-3	3RD FL FIRE SPRINKLER PLAN	▫		
FP-4	4TH FL-11TH FL FIRE SPRINKLER PLAN	▫		
FP-12	12TH FL FIRE SPRINKLER PLAN	▫		
FP-RF	ROOF FIRE SPRINKLER PLAN	▫		
FP-SP	FIRE PUMP STANDPIPE PLAN	▫		
RADON				
R010	SPECIFICATIONS	▫		
R100	BASEMENT AND FOUNDATION PLAN	▫		
R101	LEVEL 1 FOUNDATION PLAN	▫		
R200	BASEMENT FLOOR PLAN	▫		
R201	LEVEL 1 FLOOR PLAN	▫		
R202	LEVEL 2 FLOOR PLAN	▫		
R203	LEVEL 3 FLOOR PLAN	▫		
R204	LEVEL 4 FLOOR PLAN	▫		
R205	LEVEL 5 FLOOR PLAN	▫		
R206	LEVEL 6 FLOOR PLAN	▫		
R207	LEVEL 7 FLOOR PLAN	▫		
R208	LEVEL 8 FLOOR PLAN	▫		
R209	LEVEL 9 FLOOR PLAN	▫		
R210	LEVEL10 FLOOR PLAN	▫		
R211	LEVEL 11 FLOOR PLAN	▫		
R212	LEVEL 12 FLOOR PLAN	▫		
R301	ROOF PLAN	▫		
R400	DETAILS	▫		
TEMPORARY SHORING				
G1	COVER SHEET, DRAWING INDEX AND SITE MAP	▫		▫
SH1	STRUCTURAL - SHORING NOTES	▫		▫
SH2	STRUCTURAL - SHORING WALL PLAN	▫		▫
SH3	STRUCTURAL - ELEVATIONS	▫		▫
SH4	STRUCTURAL - SECTIONS	▫		▫
SH5	STRUCTURAL - DETAILS	▫		▫
SH6	STRUCTURAL - PILE SCHEDULE	▫		▫

LRS ARCHITECTS
720 NW Davis 503.221.1121
Suite 300 503.221.2077
Portland OR 97209 www.lrsarchitects.com

REGISTERED ARCHITECT
THOMAS PAUL EARLE
PORTLAND, OR
STATE OF OREGON

LEVERARCHITECTURE
4713 N ALBINA AVE, PDX OR 97217
T 503 928 6040
www.leverarchitecture.com

215349

GRAND AVENUE APARTMENTS

1010 NE GRAND AVE. PORTLAND, OR 97232

Soil Special Inspection is Required
for the following:
☒ Grading & Site Prep. ☒ Fill Placement & Compaction
☒ Shallow Foundation Subgrade Preparation ☒ Deep Foundations
☒ Soil Anchors ☐ Mech. Stabilized Earth Walls
☐ Rockery Ret. Walls ☒ Temp. Cut Slopes
☒ Settlement/Movement Monitoring ☐ Private St. Subgrade, Basecrock, Asphalt Concrete
☐ FEMA Elevation Certificate
☐

K. WEBB 10/17/17
BDS Reviewer Date

DRAWN BY: *Author*
DATE CREATED: *05/02/17*

1 ADDENDUM #01 08/11/2017
A PLAN CHECK 09/01/2017

City of Portland REVIEWED FOR CODE COMPLIANCE
DEC 22 2017
Permit Number

RECEIVED
SEP 06 2017
BDS DOCUMENT SERVICES

SHEET:
CS-2a
PERMIT SET
07-14-2017

LRS Architects, Inc. ©2017

C:\300 Revit Local Files\BIM Support\215349_Grand Ave Apts_Arch_R17_kschneider.rvt
9/5/2017 3:38:41 PM

DRAWING INDEX

		ISSUE LOG		
		PERMIT SET	ADDENDUM #1	PCR
S001	DRAWING INDEX AND LIST OF ABBREVIATIONS	X	X	X
S002	GENERAL STRUCTURAL NOTES	X	X	X
S003	GENERAL STRUCTURAL NOTES CONT.	X	-	X
S004	SPECIAL INSPECTIONS AND TESTING	X	-	-
S005	SPECIAL INSPECTIONS AND TESTING CONT.	X	-	-
S010	LOADING PLANS	X	-	X
S200	BASEMENT FOUNDATION PLAN	X	-	X
S201	FIRST FLOOR FOUNDATION PLAN	X	-	X
S201A	FIRST FLOOR SLAB PLAN	X	-	-
S202	SECOND FLOOR PLAN	X	-	X
S202P	SECOND FLOOR POST-TENSIONING PLAN	X	-	X
S202R	SECOND FLOOR REINFORCING PLAN	X	-	X
S203	THIRD - TWELFTH FLOOR PLAN	X	-	X
S203P	THIRD -TWELFTH FLOOR POST-TENSIONING PLAN	X	-	X
S203R	THIRD - TWELFTH FLOOR REINFORCING PLAN	X	-	X
S213	ROOF PLAN	X	-	X
S213P	ROOF POST-TENSIONING PLAN	X	-	X
S213R	ROOF REINFORCING PLAN	X	-	X
S220	PENTHOUSE FRAMING PLANS AND DETAILS	X	-	-
S301	SHEAR WALL ELEVATIONS	X	-	-
S302	SHEAR WALL ELEVATIONS	X	-	X
S303	SHEAR WALL ELEVATIONS	X	-	X
S304	SHEAR WALL ELEVATIONS	X	-	-
S305	BOUNDARY ELEMENTS	X	-	X
S401	CONCRETE COLUMN SCHEDULE AND DETAILS	X	-	X
S402	PILASTER DETAILS	X	-	-
S501	AUGER-CAST PILE DETAILS	X	-	X
S502	AUGER-CAST PILE, GRADE BEAM AND PILE CAP DETAILS	X	-	X
S503	CONCRETE DETAILS	X	X	-
S504	CONCRETE DETAILS	X	-	X
S520	POST TENSIONING DETAILS	X	-	-
S521	POST TENSIONING DETAILS	X	-	X
S522	STUD RAIL DETAILS	X	-	X
S530	MASONRY DETAILS	X	-	-
S601	STEEL DETAILS	X	-	-
S701	EXTERIOR FRAMING ELEVATIONS	X	X	-
S702	EXTERIOR FRAMING ELEVATIONS	X	X	-
S703	EXTERIOR FRAMING ELEVATIONS	X	-	-
S704	EXTERIOR FRAMING ELEVATIONS	X	-	-
S705	EXTERIOR FRAMING SECTIONS	X	X	-
S706	TYPICAL CLADDING DETAILS	X	X	X

ISSUE LOG KEY:
' X ' ISSUED AS PART OF A SET
' - ' NOT A PART OF ISSUED SET
' * ' FOR INFORMATION ONLY

DATE	07-14-2017	08-10-2017	09-01-2017

LIST OF ABBREVIATIONS

A.B.	ANCHOR BOLT
ACI	AMERICAN CONCRETE INSTITUTE
ADD'L.	ADDITIONAL
AESS	ARCHITECTURAL EXPOSED STRUCTURAL STEEL
AISC	AMERICAN INSTITUTE OF STEEL CONSTRUCTION INCORPORATED
ALT.	ALTERNATE
ALUM.	ALUMINUM
ARCH.	ARCHITECT
ASCE	AMERICAN SOCIETY OF CIVIL ENGINEERS
ASTM	AMERICAN SOCIETY FOR TESTING AND MATERIALS
AWS	AMERICAN WELDING SOCIETY
BLDG.	BUILDING
BOT.	BOTTOM
BRBF	BUCKLING RESTRAINED BRACED FRAME
C.G.	CENTER OF GRAVITY
C.I.P.	CAST IN PLACE
C.J.	CONTROL JOINT
C.J.P.	COMPLETE JOINT PENETRATION
CL	CENTERLINE
CLR.	CLEAR
CMU	CONCRETE MASONRY UNIT
COL.	COLUMN
CONC.	CONCRETE
CONN.	CONNECTION
CONST.	CONSTRUCTION
CONT.	CONTINUOUS
db	BAR DIAMETER
DBA	DEFORMED BAR ANCHOR
DET.	DETAIL
DIA., Ø	DIAMETER
DIAG.	DIAGONAL
D.L.	DEAD LOAD
DWG.	DRAWING
ELEC.	ELECTRICAL
EL.	ELEVATION
EQ.	EQUAL
EXIST., (E)	EXISTING
EXP.	EXPANSION
EXT.	EXTERIOR
FDN.	FOUNDATION
FIN.	FINISH
FLR.	FLOOR
FT.	FOOT
FTG.	FOOTING
GA.	GAUGE
GALV.	GALVANIZED
GL	GLULAM
HORIZ.	HORIZONTAL
HSS	HOLLOW STRUCTURAL STEEL
IBC	INTERNATIONAL BUILDING CODE
ICBO	INTERNATIONAL CONFERENCE OF BUILDING OFFICIALS
I.D.	INSIDE DIAMETER
IN.	INCH
INT.	INTERIOR
K	KIPS
KSF	KIPS PER SQUARE FOOT
KSI	KIPS PER SQUARE INCH
LB.	POUND
L.L.	LIVE LOAD
LLH	LONG LEG HORIZONTAL
LLV	LONG LEG VERTICAL
LOC.	LOCATION
LONG.	LONGITUDINAL
LVF	LOW VELOCITY FASTENER
MAX.	MAXIMUM
MBMA	METAL BUILDING MANUFACTURERS ASSOCIATION
MECH.	MECHANICAL
MFR.	MANUFACTURER
MIN.	MINIMUM
MISC.	MISCELLANEOUS
MPH	MILES PER HOUR
MT	MAGNETIC PARTICLE TESTING
(N)	NEW
N.I.C.	NOT IN CONTRACT
NOM.	NOMINAL
NO.	NUMBER
N.T.S.	NOT TO SCALE
o.c.	ON CENTER
O.D.	OUTSIDE DIAMETER
OPP.	OPPOSITE
OWJ	OPEN WEB JOIST
PAF	POWDER ACTUATED FASTENER
PART.	PARTITION
P/C	PRECAST
PCF	POUNDS PER CUBIC FOOT
PERIM.	PERIMETER
PL	PLATE
PP	PARTIAL PENETRATION
PSF	POUNDS PER SQUARE FOOT
PSI	POUNDS PER SQUARE INCH
P/T	POST-TENSIONED
P.T.	PRESSURE TREATED
PVC	POLYVINYL CHLORIDE
R, RAD.	RADIUS
RCSC	RESEARCH COUNCIL ON STRUCTURAL CONNECTIONS
REF.	REFERENCE
RET.	RETURN
REINF.	REINFORCING
REQ'D.	REQUIRED
REQ'MTS.	REQUIREMENTS
SCHED.	SCHEDULE
S.C.	SLIP CRITICAL
SIM.	SIMILAR
SLRS	SEISMIC LOAD RESISTING SYSTEM
SMS	SHEET METAL SCREW
S.O.G.	SLAB ON GRADE
SPEC.	SPECIFICATION
SQ.	SQUARE
SS	STAINLESS STEEL
SSMA	STEEL STUD MANUFACTURERS ASSOCIATION
STD.	STANDARD
STRUCT.	STRUCTURAL
SYM.	SYMMETRICAL
THRU	THROUGH
T&G	TONGUE AND GROOVE
TRANS.	TRANSVERSE
TJ	TRUSS JOIST
TS	LIGHT GAUGE TUBE STEEL
TYP.	TYPICAL
U.N.O.	UNLESS NOTED OTHERWISE
U.T.	ULTRASONIC TESTING
VERT.	VERTICAL
V.I.F.	VERIFY IN FIELD
w/	WITH
WF	WIDE FLANGE
w/o	WITHOUT
W.P.	WORK POINT
WPS	WELDING PROCEDURE SPECIFICATION
WWF	WELDED WIRE FABRIC

LRS ARCHITECTS
720 NW Davis 503.221.1121
Suite 300 503.221.2077
Portland OR 97209 www.lrsarchitects.com

STRUCTURAL REGISTERED PROFESSIONAL ENGINEER 79476PE OREGON RENEWS: 12-31-2018 JOSHUA P. RICHARDS
EXPIRES: 12-31-18

LEVERARCHITECTURE
4713 N ALBINA AVE, PDX OR 97217
T 503 928 6040
www.leverarchitecture.com

CONSULTANT:

kpff
111 SW Fifth Ave., Suite 2500
Portland, OR 97204
O: 503.227.3251
F: 503.227.7980
www.kpff.com

PROJECT NUMBER: *1600385-R17*

GRAND AVENUE APARTMENTS

1010 NE GRAND AVE. PORTLAND, OR 97232

SHEET TITLE:
DRAWING INDEX AND LIST OF ABBREVIATIONS

DRAWN BY: *BJS*
DATE CREATED: *08-10-2017*

1	Addendum #01	08.11.2017
A	Plan Check Review	09.01.2017

City of Portland REVIEWED FOR CODE COMPLIANCE DEC 22 2017 Permit Number

RECEIVED SEP 06 2017 BDS DOCUMENT SERVICES

SHEET:
S001
ADDENDUM #1
08-10-2017

LRS Architects, Inc. ©2017

GENERAL STRUCTURAL NOTES

STRUCTURAL DRAWINGS ARE A PORTION OF THE CONTRACT DOCUMENTS AND ARE INTENDED TO BE USED WITH ARCHITECTURAL, MECHANICAL, AND ELECTRICAL DRAWINGS. THE CONTRACTOR IS RESPONSIBLE FOR COORDINATING THE REQUIREMENTS FROM THESE DRAWINGS INTO THEIR SHOP DRAWINGS AND WORK.

THESE GENERAL NOTES SUPPLEMENT THE PROJECT SPECIFICATIONS. REFER TO THE PROJECT SPECIFICATIONS FOR ADDITIONAL REQUIREMENTS. NOTES AND DETAILS ON THE STRUCTURAL DRAWINGS SHALL TAKE PRECEDENCE OVER THE GENERAL NOTES AND TYPICAL DETAILS. WHERE NO DETAILS ARE GIVEN, CONSTRUCTION SHALL BE AS SHOWN FOR SIMILAR WORK.

CODE REQUIREMENTS:
CONFORM TO THE 2014 OREGON STRUCTURAL SPECIALTY CODE (OSSC), BASED ON THE 2012 INTERNATIONAL BUILDING CODE (IBC).

TEMPORARY CONDITIONS:
THE STRUCTURE IS DESIGNED TO FUNCTION AS A UNIT UPON COMPLETION. THE CONTRACTOR IS RESPONSIBLE FOR FURNISHING ALL TEMPORARY BRACING AND/OR SUPPORT THAT MAY BE REQUIRED AS THE RESULT OF THE CONTRACTOR'S CONSTRUCTION METHODS AND/OR SEQUENCES.

CONTRACTOR'S CONSTRUCTION AND/OR ERECTION SEQUENCES SHALL RECOGNIZE AND CONSIDER THE EFFECTS OF THERMAL MOVEMENTS OF STRUCTURAL ELEMENTS DURING THE CONSTRUCTION PERIOD.

RETAINING OR BASEMENT WALLS WHICH TIE TO UPPER SLABS SHALL NOT BE BACKFILLED UNTIL THE UPPER SLABS REACH FULL STRENGTH UNLESS ADEQUATE BRACING IS PROVIDED AT THE TOP OF THE WALL.

EXISTING CONDITIONS:
ALL EXISTING CONDITIONS, DIMENSIONS AND ELEVATIONS SHALL BE FIELD VERIFIED. THE CONTRACTOR SHALL NOTIFY THE ARCHITECT OF ANY SIGNIFICANT DISCREPANCIES FROM CONDITIONS SHOWN ON THE DRAWINGS.

ASSUMED FUTURE CONSTRUCTION:
VERTICAL: NONE
HORIZONTAL: NONE

DESIGN CRITERIA:
DESIGN WAS BASED ON THE STRENGTH AND DEFLECTION CRITERIA OF THE OSSC. IN ADDITION TO THE DEAD LOADS, THE FOLLOWING LOADS AND ALLOWABLES WERE USED FOR DESIGN, WITH LIVE LOADS (L.L.) REDUCED PER OSSC:

DESIGN CRITERIA		
GRAVITY SYSTEM CRITERIA		
ROOF LIVE/SNOW LOAD	**25 PSF L.L. (ALSO SEE SNOW LOAD CRITERIA BELOW)**	
FLOOR LIVE LOADS:	**UNIFORM LOAD**	**CONCENTRATED LOAD**
CORRIDORS AND STAIRS	100 PSF L.L.	2,000 LBS. (300 LBS. AT STAIRS)
RESIDENTIAL	40 PSF L.L.	-
ASSEMBLY AREAS, RETAIL	100 PSF L.L.	2,000 LBS.
SIDEWALKS AND DRIVEWAYS	250 PSF L.L.	8,000 LBS.
VERTICAL FLOOR DEFLECTION (CLADDING DESIGN)	0.75" OR L/360 WHICHEVER IS LESS LONG TERM DEAD LOAD PLUS LIVE LOAD; 0.375"	
VERTICAL FLOOR DEFLECTION (INTERIOR)	L/360 LIVE LOAD PER OSSC TABLE 1604.3	
NOTES:	1. LIVE LOADS REDUCED PER OSSC.	
	2. MEMBER DESIGNED FOR MORE CRITICAL OF UNIFORM OR CONCENTRATED LOAD.	
SNOW CRITERIA		
DESIGN ROOF SNOW LOAD	25 PSF MINIMUM IN ACCORDANCE WITH OSSC	
SNOW DRIFT	PER OSSC AS SHOWN ON PLANS	
GROUND SNOW LOAD	Pg= 10 PSF IN ACCORDANCE WITH 2013 SNOW LOAD ANALYSIS FOR OREGON	
FLAT ROOF SNOW LOAD	Pf = 7 PSF	
SNOW EXPOSURE FACTOR	Ce = 1.0	
SNOW LOAD IMPORTANCE FACTOR	Is = 1.0	
THERMAL FACTOR	Ct = 1.0	
GEOTECHNICAL CRITERIA		
DESIGN BASED ON REPORT BY:	GRI DATED MARCH 9, 2017	
RETAINING WALLS - CANTILEVERED	35 PCF+10 PCF SEISMIC (EQUIVALENT FLUID PRESSURE)	
RETAINING WALLS - BRACED AT TOP	55 PCF+15PCF SEISMIC (EQUIVALENT FLUID PRESSURE)	
ALLOWABLE PILE LOADING:	PILE DIAMETER	
SOIL LAYER:	30"	36"
UPPER GRAVEL	450K/275K UPLIFT	575K/330K UPLIFT
SILTY SAND	600K/500K UPLIFT	730K/600K UPLIFT
LOWER GRAVEL	950K/600K UPLIFT	1300K/800K UPLIFT
WIND CRITERIA		
RISK CATEGORY	II	
MAIN WIND FORCE RESISTING SYSTEM	Vult = 120 MPH ULTIMATE DESIGN WIND SPEED (3-SECOND GUST)	
COMPONENTS AND CLADDINGS	Vult = 120 MPH ULTIMATE DESIGN WIND SPEED (3-SECOND GUST)	
EXPOSURE CATEGORY	B	
GUST/INTERNAL PRESSURE	GCpi = +/- 0.18	
LATERAL OUT-OF-PLANE WALL DEFLECTION AT VENEER BRICK	L/600 WIND LOAD	
LATERAL OUT-OF-PLANE WALL DEFLECTION AT METAL PANEL	L/360 WIND LOAD	
SEISMIC CRITERIA		
RISK CATEGORY	II	
SEISMIC DESIGN CATEGORY	D	
SITE CLASS	C	
IMPORTANCE FACTOR	IE = 1.0	
MCE SPECTRAL ACCELERATION	DETERMINED BY SITE-SPECIFIC SEISMIC HAZARD EVALUATION. DESIGN FOR ENVELOPE OF 2 GROUND MOTIONS INDICATED BELOW.	
SITE COEFFICIENT		
SITE SPECIFIC DESIGN SPECTRAL ACCELERATION	SDS = 0.66	SD1 = 0.39
LOWER BOUND DESIGN SPECTRAL ACCELERATION	SDS = 0.578	SD1 = 0.334
ANALYSIS PROCEDURE	MODAL RESPONSE SPECTRUM PER ASCE 7-10, SECTION 12.9	
	X DIRECTION (E / W)	Y DIRECTION (N / S)
SEISMIC FORCE RESISTING SYSTEM (SFRS)	SPECIAL REINFORCED CONCRETE SHEAR WALLS	SPECIAL REINFORCED CONCRETE SHEAR WALLS
RESPONSE MODIFICATION FACTOR	R = 6	R = 6
SEISMIC RESPONSE COEFFICIENT	Cs = 0.061	Cs = 0.061
DESIGN BASE SHEAR	1,395 KIPS	1,395 KIPS
REDUNDANCY FACTOR	rho = 1.3	rho = 1.3
DESIGN INELASTIC STORY DRIFT	Δ = 1.25"	Δ = 1.25"

SEISMIC FORCE-RESISTING SYSTEM:
THE SEISMIC FORCE-RESISTING SYSTEM (SFRS) FOR THE COMPLETED STRUCTURE IS AS FOLLOWS:

RIGID CONCRETE SLABS DISTRIBUTE LATERAL FORCES TO CONCRETE SHEAR WALLS SURROUNDING EACH ELEVATOR SHAFT.

REFERENCE SHEETS S301 THRU S305 FOR SFRS ELEVATIONS AND DETAILS. REFERENCE PLANS FOR ADDITIONAL SFRS COMPONENTS AND DETAILS.

REFER TO THE GENERAL STRUCTURAL NOTES AND PROJECT SPECIFICATIONS FOR DETAILING, INSTALLATION, TESTING AND INSPECTION REQUIREMENTS FOR MEMBERS THAT ARE PART OF THE SEISMIC FORCE RESISTING SYSTEM (SFRS).

DESIGN AND DETAILING WAS BASED ON CRITERIA FOR SEISMIC DESIGN CATEGORY D.

STRUCTURAL OBSERVATION:
THE STRUCTURAL ENGINEER OF RECORD (SER) WILL PERFORM STRUCTURAL OBSERVATION BASED ON THE REQUIREMENTS OF THE OSSC AT THE STAGES OF CONSTRUCTION LISTED BELOW. CONTRACTOR SHALL PROVIDE SUFFICIENT NOTICE AND ACCESS FOR THE SER TO PERFORM THESE OBSERVATIONS.

STRUCTURAL OBSERVATIONS			
ITEM	**OBSERVED BY (2)**		**COMMENTS**
	AOR	**SER**	
PRIOR TO FIRST CONCRETE POUR		X	REF. NOTES 1,3,4,5
PRIOR TO FIRST CONCRETE DECK POUR		X	REF. NOTES 1,3,4,5
AS REQUIRED TO ADDRESS STRUCTURAL ISSUES		X	REF. NOTES 1,3,4

FOOTNOTES:

1. CONTRACTOR IS RESPONSIBLE FOR NOTIFYING THE SER IN ADVANCE.
2. SER - STRUCTURAL ENGINEER OF RECORD.
   AOR - ARCHITECT OF RECORD.
3. A FIELD REPORT WILL BE SUBMITTED TO THE BUILDING DEPARTMENT FOLLOWING EACH SITE VISIT.
4. STRUCTURAL OBSERVATION IS FOR THE GENERAL CONFORMANCE OF THE STRUCTURAL DRAWING, SPECIAL INSPECTION IS STILL REQUIRED.
5. AFTER REINFORCING STEEL HAS BEEN INSTALLED.

SPECIAL INSPECTION AND TESTING:
SPECIAL INSPECTION WILL BE PROVIDED BY THE OWNER BASED ON THE REQUIREMENTS OF THE OSSC AS SUMMARIZED IN THE SPECIAL INSPECTION AND TESTING PROGRAM ON SHEETS S004 AND S005. CONTRACTOR SHALL PROVIDE SUFFICIENT NOTICE AND ACCESS FOR THE SPECIAL INSPECTOR TO PERFORM THESE INSPECTIONS.

SUBMITTALS:
SHOP DRAWINGS SHALL BE SUBMITTED TO THE ARCHITECT PRIOR TO FABRICATION AND CONSTRUCTION OF ALL STRUCTURAL ITEMS, INCLUDING THE FOLLOWING:

SUBMITTALS			
ITEM	**SUBMITTAL (1,4,5)**	**DEFERRED SUBMITTAL (2,4,5,6)**	**COMMENTS**
CONCRETE MIX DESIGNS	X		
CONCRETE REINFORCEMENT	X		
MASONRY REINFORCEMENT	X		
CONCRETE ANCHORAGES	X		
EMBEDDED STEEL ITEMS	X		
POST-TENSIONED REINFORCING		X	
STRUCTURAL STEEL	X		
STEEL WELDING PROCEDURES	X		
STEEL DECKING	X		
INTERIOR LIGHT GAUGE METAL FRAMING	X		
STOREFRONT GLAZING SYSTEMS		X	
STAIRS, LADDERS, AND RAILINGS		X	
MEP EQUIPMENT ANCHORAGE AND BRACING		X	REF. NOTE 3
WINDOWS		X	

FOOTNOTES:

1. SHOP DRAWINGS SHALL BE SUBMITTED TO THE ARCHITECT PRIOR TO FABRICATION AND CONSTRUCTION OF STRUCTURAL ITEMS. IF THE SHOP DRAWINGS DIFFER FROM OR ADD TO THE DESIGN OF THE STRUCTURAL DRAWINGS, THEY SHALL BEAR THE SEAL AND SIGNATURE OF A STRUCTURAL ENGINEER REGISTERED IN THE STATE OF OREGON. ANY CHANGES TO THE STRUCTURAL DRAWINGS SHALL BE SUBMITTED TO THE ARCHITECT AND ARE SUBJECT TO REVIEW AND ACCEPTANCE OF THE STRUCTURAL ENGINEER.

SEISMIC INSTRUMENTATION PER OSSC 1613.7 IS A DEFERRED SUBMITTAL

PER KPFF EMAIL 9/19/17

2. DESIGN DRAWINGS, SHOP DRAWINGS, AND CALCULATIONS FOR THE DESIGN AND FABRICATION OF ITEMS THAT ARE DESIGNED BY OTHERS SHALL BEAR THE SEAL AND SIGNATURE OF A STRUCTURAL ENGINEER REGISTERED IN THE STATE OF OREGON, AND SHALL BE SUBMITTED TO THE ARCHITECT PRIOR TO FABRICATION. CALCULATIONS SHALL BE INCLUDED FOR ALL CONNECTIONS TO THE STRUCTURE, CONSIDERING LOCALIZED EFFECTS ON STRUCTURAL ELEMENTS INDUCED BY THE CONNECTION LOADS. DESIGN SHALL BE BASED ON THE REQUIREMENTS OF THE OSSC AND AS NOTED UNDER "DESIGN CRITERIA".
3. THE CONTRACTOR SHALL COORDINATE SEISMIC RESTRAINTS OF MECHANICAL, PLUMBING, AND ELECTRICAL EQUIPMENT, MACHINERY, AND ASSOCIATED PIPING WITH THE STRUCTURE. CONNECTIONS TO STRUCTURE SHALL CONFORM TO ASCE 7-10 CHAPTER 13, BE DESIGNED BY AN ENGINEER REGISTERED IN THE STATE OF OREGON, AND SHALL BE SUBMITTED TO THE ARCHITECT PRIOR TO FABRICATION.
4. FIELD ENGINEERED DETAILS DEVELOPED BY THE CONTRACTOR THAT DIFFER FROM OR ADD TO THE STRUCTURAL DRAWINGS SHALL BEAR THE SEAL AND SIGNATURE OF A STRUCTURAL ENGINEER REGISTERED IN THE STATE OF OREGON AND SHALL BE SUBMITTED TO THE ARCHITECT PRIOR TO CONSTRUCTION.
5. THE USE OF REPRODUCTIONS OR PHOTOCOPIES OF THE CONTRACT DRAWINGS SHALL NOT BE PERMITTED. WHEN CAD OR REVIT FILES ARE PROVIDED TO THE CONTRACTOR OR SUBCONTRACTORS, IT IS THE RESPONSIBILITY OF THE DETAILERS TO REMOVE ALL INFORMATION NOT DIRECTLY RELEVANT TO THE CREATION OF THE PLACING DRAWINGS AS WELL AS ALL REFERENCES TO THE OUTSIDE SOURCE FILES.
6. SPECIAL INSPECTION AND STRUCTURAL OBSERVATION REQUIREMENTS CONFORMING WITH THE OSSC MUST BE CLEARLY INDICATED ON DELEGATED DESIGN DOCUMENTS.

CONCRETE:
CONCRETE WORK SHALL CONFORM TO CHAPTER 19 OF THE OSSC. CONCRETE STRENGTHS SHALL BE VERIFIED BY STANDARD CYLINDER TESTS PER ASTM C39. MIX DESIGNS SHALL BE AS FOLLOWS:

CONCRETE MIX DESIGNS				
USE	f'c (PSI)	TEST AGE (DAYS)	MAX. W/CM RATIO (NOTE 1)	MAX. AGGREGATE SIZE
MISC. CONCRETE, CURBS, SIDEWALKS, ETC.	3,000	28	0.50	1"
INTERIOR SLABS ON GRADE	4,000	28	0.50	1"
BASEMENT WALLS, GRADE BEAMS AND PILE CAPS	4,000	28	0.45	1"
AUGER-CAST PILES	4,500	28	0.45	3/4"
CONCRETE ON METAL DECK, U.N.O.	4,000	28	0.50	3/4"
P/T SLABS AND BEAMS (NOTE 4)	5,000	28	0.45	3/4"
COLUMNS AND SHEAR WALLS	6,000	28	REF. NOTE 2	3/4"

TABLES NOTES:
1. VERIFY WATER-CEMENTITIOUS MATERIAL RATIO WITH FLOOR COVERING MANUFACTURER FOR CONCRETE FLOORS WITH MOISTURE SENSITIVE FLOOR COVERINGS.
2. ESTABLISH WATER-CEMENTITIOUS MATERIAL RATIO PER ACI 318-11 CHAPTER 5.
3. REFERENCE EXPOSED SLAB GENERAL NOTES FOR ADDITIONAL MIX REQUIREMENTS.
4. POST-TENSIONED OR PRESTRESSED CONCRETE SHALL NOT CONTAIN MORE THAN 0.06% CHLORIDE IONS BY WEIGHT OF CEMENT.

PORTLAND CEMENT CONTENT MAY BE REPLACED UP TO 20% WITH FLY ASH CONFORMING TO ASTM C618 (INCLUDING TABLE 2A) TYPE F OR TYPE C OR UP TO 50% WITH SLAG CEMENT CONFORMING TO ASTM C989, PROVIDED THAT THE MIX STRENGTH IS SUBSTANTIATED BY TEST DATA. FOR MIX DESIGNS WITH f'c = 5,000 PSI OR LESS, SLAG CEMENT MAY BE SUBSTITUTED FOR FLY ASH AT A 1:1 RATIO WITHOUT TEST DATA. WHEN SLAG CEMENT IS SUBSTITUTED IN HIGHER STRENGTH MIXES OR AT DIFFERENT RATIO, THE MIX STRENGTH MUST BE SUBSTANTIATED BY TEST DATA.

A WATER-REDUCING ADMIXTURE CONFORMING TO ASTM C494 USED IN STRICT ACCORDANCE WITH THE MANUFACTURER'S RECOMMENDATIONS SHALL BE INCORPORATED IN CONCRETE DESIGN MIXES. A HIGH-RANGE WATER-REDUCING (HRWR) ADMIXTURE CONFORMING TO ASTM C494 TYPE F OR G MAY BE USED IN CONCRETE MIXES PROVIDING THAT THE SLUMP DOES NOT EXCEED 10". AN AIR-ENTRAINING AGENT CONFORMING TO ASTM C260 SHALL BE USED IN CONCRETE MIXES FOR ALL CONCRETE EXPOSED TO WEATHER. THE AMOUNT OF ENTRAINED AIR BY VOLUME SHALL BE AS FOLLOWS ± 1.5%:

CONCRETE MIX AIR CONTENT	
MAX. AGGREGATE SIZE	**CONCRETE SUBJECT TO FREEZE/THAW**
3/8"	6.0%
1/2"	5.5%
3/4"	5.0%
1"	4.5%
1-1/2"	4.5%

CONCRETE ELEMENTS SUBJECT TO FREEZE/THAW INCLUDE ALL EXTERIOR (MISC. CONCRETE CURBS, SIDEWALKS AND EXTERIOR SLABS.

THE CONTRACTOR SHALL SUBMIT CONCRETE MIX DESIGNS ALONG WITH TEST DATA COMPLIANT WITH ACI 318-11 OSSC SECTION 1905 A MINIMUM OF TWO WEEKS PRIOR TO PLACING CONCRETE. NO WATER MAY BE ADDED TO CONCRETE IN THE FIELD UNLESS SPECIFICALLY APPROVED IN WRITING BY THE CONCRETE SUPPLIER IN CONJUNCTION WITH THE CONCRETE MIX DESIGN.

SLEEVES, OPENINGS, CONDUIT, AND OTHER EMBEDDED ITEMS NOT SHOWN ON THE STRUCTURAL DRAWINGS SHALL BE APPROVED BY THE STRUCTURAL ENGINEER BEFORE PLACING CONCRETE. CONDUITS EMBEDDED IN SLABS SHALL NOT BE LARGER IN OUTSIDE DIMENSION THAN ONE THIRD OF THE THICKNESS OF THE SLAB AND SHALL NOT BE SPACED CLOSER THAN THREE DIAMETERS ON CENTER.

WHERE NEW CONCRETE IS PLACED AGAINST EXISTING CONCRETE, THE EXISTING CONCRETE SURFACE SHALL BE CLEANED AND ROUGHENED TO A MINIMUM 1/4" AMPLITUDE PER ACI 318 SECTION 11.6.9. PROVIDE 3/4" CHAMFERS ON ALL EXPOSED CONCRETE EDGES, UNLESS NOTED OTHERWISE.

VERIFY ALL BLOCK OUTS WITH ARCHITECTURAL, MECHANICAL, ELECTRICAL, AND PLUMBING REQUIREMENTS.

SHORING AND RE-SHORING:
SHORING AND RE-SHORING DESIGN IS THE CONTRACTOR'S RESPONSIBILITY AND SHALL CONFORM TO 347R-14 AND ACI 347.2R-05. SHORING AND SUPPORTING FORMWORK SHALL NOT BE REMOVED FROM HORIZONTAL MEMBERS BEFORE CONCRETE STRENGTH IS AT LEAST 70 PERCENT OF DESIGN STRENGTH, AS DETERMINED BY FIELD CURED CYLINDERS. IN ADDITION, SHORING SHALL NOT BE REMOVED SOONER THAN THE FOLLOWING CUMULATIVE TIME PERIODS WITH SURROUNDING TEMPERATURE GREATER THAN OR EQUAL TO 50 DEGREES FAHRENHEIT:

SHORING AND RE-SHORING		
ELEMENT	**MINIMUM REMOVAL TIME**	**COMMENTS**
WALLS, COLUMNS AND BEAM SIDES	12 HOURS	WHERE FORMS ALSO SUPPORT FORMWORK FOR SLABS OR SOFFITS, THE REMOVAL TIME OF THE LATTER GOVERNS.
JOIST, BEAM OR GIRDER SOFFITS LESS THAN 10'-0" CLEAR SPAN 10'-0" TO 20'-0" CLEAR SPAN OVER 20'-0"	 7 DAYS 14 DAYS 21 DAYS	FORM REMOVAL TIME MAY BE HALF OF THAT SHOWN WHERE FORMS WILL BE REMOVED WITHOUT DISTURBING SHORES.
POST-TENSIONED SYSTEMS	AS SOON AS FULL POST-TENSIONING FORCE HAS BEEN APPLIED	APPLIES TO BOTH SLAB AND BEAM SYSTEMS

REINFORCING STEEL:
ALL LONGITUDINAL FLEXURAL REINFORCEMENT IN BEAMS, COLUMNS AND SHEAR WALLS SHALL BE ASTM A706, GRADE 60. ALL OTHER DEFORMED BAR REINFORCEMENT MAY BE ASTM A615 GRADE 60 OR ASTM A706 GRADE 60. ASTM A615 REINFORCEMENT MAY BE SUBSTITUTED FOR ASTM A706 REINFORCEMENT PROVIDED THAT THE ACTUAL YIELD STRENGTH BASED ON MILL TESTS DOES NOT EXCEED 78,000 PSI AND THE RATIO OF ACTUAL TENSILE STRENGTH TO ACTUAL YIELD STRENGTH IS NOT LESS THAN 1.25. MILL TESTS CERTIFICATIONS FOR SUBSTITUTED BARS SHALL BE SUBMITTED TO THE SPECIAL INSPECTOR AND EOR PRIOR TO PLACEMENT.

SMOOTH WELDED WIRE FABRIC (WWF) SHALL BE ASTM A1064, UNLESS NOTED OTHERWISE. REINFORCING STEEL TO BE WELDED SHALL CONFORM TO ASTM A706. WELDING SHALL COMPLY WITH AWS D1.4. COLUMN SPIRALS SHALL BE PLAIN OR DEFORMED BARS CONFORMING TO ASTM A615, GRADE 60. REINFORCING STEEL SHALL BE SECURELY TIED IN PLACE WITH #16 ANNEALED IRON WIRE.

BARS IN BEAMS AND SLABS SHALL BE SUPPORTED ON WELL-CURED CONCRETE BLOCKS OR APPROVED METAL OR PLASTIC CHAIRS, AS SPECIFIED BY THE CRSI MANUAL OF STANDARD PRACTICE, MSP-1. REINFORCING STEEL SHALL BE DETAILED IN ACCORDANCE WITH THE "ACI MANUAL OF STANDARD PRACTICE FOR DETAILING REINFORCED CONCRETE STRUCTURES," ACI 315. SHOP DRAWINGS SHALL INCLUDE ELEVATIONS OF ALL BEAMS, WALLS AND COLUMNS SHOWING BAR LOCATIONS. LAP ALL REINFORCING BARS PER THE TYPICAL LAP SPLICE LENGTH SCHEDULES, EXCEPT AS NOTED ON DRAWINGS. USE LAP LENGTH FOR SMALLER BAR WHEN SPLICING DIFFERENT BAR SIZES. BARS SPLICED WITH NONCONTACT LAPS SHALL BE SPACED NO FARTHER THAN 1/5TH THE LAP LENGTH OR 6 INCHES. MECHANICAL SPLICES NOTED ON THE PLANS SHALL BE DAYTON SUPERIOR BAR-LOCK (ICC ESR-2495) OR TAPER-LOCK COUPLERS (IAPMO ES-0319) OR APPROVED WITH A CURRENT EVALUATION APPROVAL REPORT.

TYP. WALL AND SLAB LAP SPLICE LENGTH SCHEDULE (IN.)				
BAR SIZE	WALL VERTICAL AND SLAB BOTTOM BARS (NOTE 7)		WALL HORIZONTAL AND SLAB TOP BARS (NOTE 7)	
	f'c = 4,000 PSI	f'c = 5,000 PSI	f'c = 4,000 PSI	f'c = 5,000 PSI
#3	12	12	16	14
#4	20	18	26	22
#5	28	26	36	32
#6	38	34	50	44
#7	62	54	78	70
#8	74	68	98	88
#9	92	82	118	106
#10	108	98	142	126
#11	128	116	166	150

TYP. BEAM AND COLUMN LAP SPLICE LENGTH SCHEDULE (IN.)		
BAR SIZE	f'c = 5,000PSI	
	BEAM TOP BARS	OTHER BARS
#4	18	14
#5	22	18
#6	28	22
#7	40	30
#8	44	34
#9	56	42
#10	68	54
#11	82	64

TYP. FOUNDATION AND PILE CAP LAP SPLICE LENGTH SCHEDULE (IN.)				
BAR SIZE	BOTTOM BARS (NOTE 7)		TOP BARS (NOTE 7)	
	f'c = 4,000 PSI	f'c = 5,000 PSI	f'c = 4,000 PSI	f'c = 5,000 PSI
#3	12	12	16	14
#4	16	14	20	18
#5	20	18	26	22
#6	24	22	32	28
#7	40	36	50	46
#8	48	42	62	54
#9	54	48	70	62
#10	60	54	78	70
#11	68	60	90	82

1. MINIMUM LAP SPLICES NOTED ARE FOR NON-LATERAL LOAD RESISTING ELEMENTS. FOR REBAR LAPS SPLICES AT LATERAL LOAD RESISTING ELEMENTS, REFERENCE PLANS AND ELEVATIONS.
2. ASTM A615 OR ASTM A706, GRADE 60 DEFORMED REINFORCING BARS
3. MINIMUM CLEAR COVER AND BAR SPACING of 4db TO BE PROVIDED.
4. NORMAL WEIGHT CONCRETE, FOR LIGHT-WEIGHT CONCRETE MULTIPLY TABLE VALUES BY 1.3.
5. UNCOATED BARS, FOR EPOXY-COATED BARS MULTIPLY TABLE VALUES BY 1.5.
6. COMBINATIONS OF EFFECTS DUE TO CONCRETE STRENGTH, CONCRETE WEIGHT, AND EPOXY COATING ARE CUMULATIVE.
7. SLAB, FOUNDATION AND MAT TOP BARS ARE BARS CAST ABOVE MORE THAN 12" OF FRESH CONCRETE. ALL OTHER SLAB BARS MAY BE CONSIDERED BOTTOM BARS.

TYP. SHEAR WALL LAP SPLICES
REFERENCE LAP SPLICE SCHEDULES ON ELEVATION SHEETS S301

REINFORCING STEEL SHALL HAVE PROTECTION AS FOLLOWS:

REINFORCING STEEL CONCRETE COVER	
USE	**CLEAR COVER**
BEAMS, JOISTS AND COLUMNS	1-1/2" (TO STIRRUPS OR TIES)
SLABS	3/4"
WALLS: INTERIOR FACES	3/4"
WALLS: EXPOSED TO EARTH OR WEATHER	1-1/2" (#5 AND SMALLER)
	2" (#6 AND LARGER)
CONCRETE CAST AGAINST AND EXPOSED TO EARTH	3"

LRS ARCHITECTS
720 NW Davis 503.221.1121
Suite 300 503.221.2077
Portland OR 97209 www.lrsarchitects.com

STRUCTURAL REGISTERED PROFESSIONAL ENGINEER 78476PE OREGON DEC. 13, 2005 JOSHUA P. RICHARDS
EXPIRES 12-31-18

LEVERARCHITECTURE
4713 N ALBINA AVE, PDX OR 97217
T 503 928 6040
www.leverarchitecture.com

CONSULTANT:

kpff
111 SW Fifth Ave., Suite 2500
Portland, OR 97204
O: 503.227.3251
F: 503.227.7980
www.kpff.com

PROJECT NUMBER: 1600385-R17

GRAND AVENUE APARTMENTS

1010 NE GRAND AVE. PORTLAND, OR 97232

SHEET TITLE:
GENERAL STRUCTURAL NOTES

DRAWN BY:	BJS
DATE CREATED:	08-10-2017
1 Addendum #01	08.11.2017
A Plan Check Review	09.01.2017

City of Portland REVIEWED FOR CODE COMPLIANCE DEC 22 2017 Permit Number

RECEIVED SEP 06 2017 BDS DOCUMENT SERVICES

SHEET:
S002
ADDENDUM #1
08-10-2017

LRS Architects, Inc. ©2017

GENERAL STRUCTURAL NOTES CONTINUED

CONCRETE WALL REINFORCING:
CONCRETE WALL REINFORCEMENT TO BE AS FOLLOWS, U.N.O.:

CONCRETE WALL REINFORCING			
WALL THICKNESS	HORIZONTAL BARS	VERTICAL BARS	LOCATION
6"	#4 @ 12" o.c.	#4 @ 12" o.c.	AT CL OF WALL
8"	#4 @ 10" o.c.	#4 @ 10" o.c.	AT CL OF WALL
10"	#4 @ 16" o.c.	#4 @ 16" o.c.	AT EACH FACE
12"	#4 @ 12" o.c.	#4 @ 12" o.c.	AT EACH FACE

CONCRETE REINFORCING DETAILS:
CONTINUE HORIZONTAL WALL BARS THROUGH PILASTERS, COLUMNS AND INTERSECTING WALLS. AT SLAB AND WALL OPENINGS PROVIDE A MINIMUM OF TWO #5 BARS OVER, UNDER AND AT THE SIDES OF THE OPENINGS. EXTEND THESE BARS LAP DISTANCE OR A MINIMUM OF 2'-0" PAST THE OPENING. PROVIDE ONE #5 FOR SINGLE-LAYER REINFORCING AND TWO #5 FOR DOUBLE-LAYER REINFORCING, 4'-0" LONG, DIAGONALLY AT EACH CORNER OF ALL OPENINGS. REFER TO TYPICAL DETAILS FOR DISPOSITION OF CORNER BARS AND BARS IN SMALL WALL SECTIONS. SLAB BARS SHALL BE HOOKED INTO WALLS, OR HOOKED DOWELS SHALL BE PROVIDED TO MATCH SLAB REINFORCING. PROVIDE TWO #4, 4'-0" LONG DIAGONALLY AT EACH RE-ENTRANT CORNER IN SLABS. PROVIDE HOOKED DOWELS FROM FOOTINGS TO MATCH VERTICAL WALL REINFORCING, UNLESS NOTED OTHERWISE. SHOP DRAWINGS SHALL INCLUDE ALL SPECIAL REINFORCEMENT LISTED ABOVE.

CONCRETE ACCESSORIES:
HEADED SHEAR STUDS SHALL BE NELSON HEADED ANCHORS WITH FLUXED ENDS (ICC ESR-2856) OR APPROVED. DEFORMED BAR ANCHORS (DBA) SHALL BE NELSON, TYPE D2L (ICC ESR-2907), OR APPROVED. STUDS AND DBA SHALL BE AUTOMATICALLY END-WELDED WITH THE MANUFACTURER'S STANDARD EQUIPMENT IN ACCORDANCE WITH THEIR RECOMMENDATIONS.

POST-INSTALLED ANCHORS SHALL BE OF THE TYPE AND PRODUCT SPECIFIED ON THE DRAWINGS OR AS FOLLOWS:

POST INSTALLED CONCRETE ANCHORS	
TYPE	APPROVED ANCHORS
EXPANSION	HILTI KWIK BOLT TZ (ICC ESR-1917)
CONCRETE SCREW	HILTI KWIK HUS-EZ (ICC ESR-3027)
EPOXY ADHESIVE	HILTI HIT-HY 200 (ICC ESR-3187)

ALL ANCHORS SHALL BE INSTALLED IN STRICT CONFORMANCE WITH THE MANUFACTURER'S RECOMMENDATIONS AND PRODUCT EVALUATION REPORTS. EMBEDMENTS SPECIFIED ON DRAWINGS ARE "EFFECTIVE" EMBEDMENTS. REFERENCE MANUFACTURER LITERATURE FOR CORRESPONDING ACTUAL EMBEDMENT DEPTHS.

REQUESTS FOR ANCHOR SUBSTITUTIONS SHALL BE SUBMITTED TO THE EOR IN WRITING ALONG WITH EVIDENCE OF EQUAL OR GREATER CAPACITY TO THE SPECIFIED CONNECTION. DO NOT CUT REINFORCING IN NEW OR EXISTING CONCRETE DURING INSTALLATION.

INSTALLATION OF ADHESIVE ANCHORS HORIZONTALLY OR UPWARDLY INCLINED SHALL BE PERFORMED BY A CERTIFIED ADHESIVE ANCHOR INSTALLER AS CERTIFIED THROUGH ACI/CRSI AND IN ACCORDANCE WITH ACI 318-11 SECTION D.9.2.2. PROOF OF CURRENT CERTIFICATION SHALL BE SUBMITTED TO THE EOR PRIOR TO INSTALLATION.

ANCHORS EXPOSED TO EARTH OR WEATHER SHALL BE PROTECTED FROM CORROSION BY HOT-DIP GALVANIZING OR USE OF STAINLESS STEEL. PERMANENTLY EXPOSED EMBEDDED PLATES AND ANGLES SHALL BE HOT-DIPPED GALVANIZED AFTER FABRICATION, UNLESS NOTED OTHERWISE.

NO LOADS OR WELDS SHALL BE PLACED ON EMBEDDED PLATES OR ANGLES FOR A MINIMUM OF 7 DAYS AFTER CASTING. IN ACCORDANCE WITH ACI 318-11 SECTION D.2.2 ADHESIVE ANCHORS SHALL NOT BE INSTALLED FOR A MINIMUM OF 21 DAYS AFTER CASTING.

POST-TENSIONING SYSTEMS:
ALL POST-TENSIONED CONCRETE SHALL HAVE A MINIMUM COMPRESSIVE STRENGTH OF 3,000 PSI AT TRANSFER OF PRESTRESS FORCE AND A MINIMUM STRENGTH OF 5,000 PSI AT 28 DAYS, AS SUBSTANTIATED BY STANDARD CYLINDER TESTS (FIELD CURED FOR VERIFICATION OF TRANSFER STRENGTH). EXTRA FIELD-CURED TEST CYLINDERS MAY BE REQUIRED AT THE CONTRACTOR'S OPTION.

POST-TENSIONING SHALL BE INSTALLED TO PROVIDE THE REQUIRED FINAL PRESTRESS FORCE (AFTER ALL LOSSES) AT THE LOCATION SHOWN ON THE PLANS OR DETAILS FOR EACH MEMBER. POST- TENSIONING REINFORCEMENT SHALL CONFORM TO ASTM A416 FOR UNCOATED SEVEN-WIRE, STRESS- RELIEVED, LOW RELAXATION, GRADE 270 STRANDS. POST-TENSIONING REINFORCEMENT SHALL BE 1/2" DIAMETER UNBONDED TENDONS, UNLESS NOTED OTHERWISE. PROVIDE FULLY ENCAPSULATED SYSTEM FOR UNBONDED TENDONS.

RECORDS OF TENDON ELONGATIONS SHALL BE SUBMITTED TO AND REVIEWED BY THE STRUCTURAL ENGINEER PRIOR TO CUTTING THE TENDON ENDS.

SHOP DRAWINGS SHALL INCLUDE ELEVATIONS OF ALL BEAMS, AS WELL AS PLANS OF ALL SLABS SHOWING ALL TENDON LOCATIONS. SPACING OF TENDONS OR GROUPS OF TENDONS IN THE DISTRIBUTED DIRECTION SHALL NOT EXCEED 5 FEET, NOR 8 TIMES THE SLAB THICKNESS. CONCRETE COVER FOR TENDONS SHALL BE AS SHOWN ON THE PLANS. TENDONS SHALL BE INSTALLED WITH A PARABOLIC DRAPE WITHIN ±1/8" OF THE ELEVATION SHOWN ON THE PLANS FOR HIGH AND LOW POINTS AND WITHIN ±1/4" AT OTHER LOCATIONS. THE MINIMUM RADIUS OF CURVATURE FOR TENDONS IN THE VERTICAL OR HORIZONTAL PLANE SHALL BE 21 FEET.

ANCHORAGES, COUPLERS, AND OTHER FITTINGS SHALL BE THE ICC APPROVED MANUFACTURER'S STANDARD DESIGN FOR THE LOADS APPLIED. MINIMUM CONCRETE COVER FOR ANCHORAGES SHALL BE 2". PROVIDE ONE #4 REINFORCING BAR ABOVE AND BELOW ALL STRESSING AND ANCHOR POINTS.

WITHIN THE FIRST YEAR OF SUBSTANTIAL COMPLETION, PROVIDE EPOXY INJECTION REPAIR OF ALL CRACKS 0.025" OR WIDER AND/OR ALL CRACKS 0.015" OR WIDER IN PARKING SLABS OR OTHER LOCATIONS EXPOSED TO WEATHER. CONTRACTOR SHALL PROVIDE A MINIMUM ALLOWANCE FOR CRACK REPAIR EQUAL TO 0.005x(TOTAL P/T FLOOR AREA) OF LINEAL FEET FOR REPAIR, HOWEVER CONSTRUCTION MEANS AND METHODS MAY SIGNIFICANTLY IMPACT THE AMOUNT OF CRACKING AND THIS RECOMMENDATION MAY BE EXCEEDED IN THE FIELD. REF. P/T SPECIFICATION FOR ADDITIONAL INFORMATION ON CRACK REPAIR. NOTIFY ARCHITECT AND EOR FOR APPROVAL PRIOR TO ANY CRACK REPAIR ACTIVITIES.

CRACK INJECTION EPOXY REPAIR ADHESIVE:
EPOXY REPAIR ADHESIVE SHALL CONFORM TO ASTM C881 AND SHALL BE A TWO-COMPONENT, LIQUID EPOXY WITH NON-SAG CONSISTENCY AND A LONG POT LIFE. THE EPOXY ADHESIVE SHALL BE SUITABLE FOR USE ON DRY OR DAMP SURFACES. EPOXY SHALL MEET REQUIREMENTS OF A "TYPE IV" BONDING SYSTEM WITH A MINIMUM TENSILE STRENGTH OF 7,000 PSI. HOLE SIZES AND INSTALLATION SHALL BE IN STRICT ACCORDANCE WITH THE APPROVED EVALUATION REPORT REQUIREMENTS. DO NOT CUT REINFORCING IN NEW OR EXISTING CONCRETE DURING INSTALLATION.

REINFORCED CONCRETE MASONRY:
CONCRETE MASONRY UNITS SHALL COMPLY WITH ASTM C90, MEDIUM WEIGHT, SAMPLED AND TESTED IN ACCORDANCE w/ ASTM C140. LINEAL SHRINKAGE FOR UNITS SHALL NOT EXCEED 0.065%. BLOCK COMPRESSIVE STRENGTH SHALL BE AS INDICATED IN BELOW TABLE. ASSEMBLIES SHALL HAVE A MINIMUM COMPRESSIVE STRENGTH (f 'm) AS INDICATED IN BELOW TABLE AS VERIFIED BY THE UNIT STRENGTH METHOD CONFORMING TO OSSC SECTION 2105. WALLS SHALL BE REINFORCED AS SHOWN ON THE PLANS AND DETAILS AND, IF NOT SHOWN, SHALL BE AS NOTED UNDER "MASONRY REINFORCING STEEL". PROVIDE VERTICAL DRIFT AND EXPANSION JOINTS AT INTERFACE WITH CONCRETE WALLS AND COLUMNS AND IN CONTINUOUS MASONRY AS SHOWN ON THE STRUCTURAL DRAWINGS

CONCRETE MASONRY ASSEMBLY STRENGTH			
f'm (PSI)	BLOCK UNIT STRENGTH (PSI)	GROUT STRENGTH (PSI)	MORTAR
1,500	1,900	2,000	TYPE M OR S

MORTAR:
MORTAR SHALL BE OF THE TYPE INDICATED IN THE PRECEDING TABLE, WITH A MINIMUM COMPRESSIVE STRENGTH AT 28 DAYS OF 1,800 PSI AND SHALL CONFORM TO OSSC SECTION 2103.

MASONRY GROUT:
GROUT SHALL HAVE COMPRESSIVE STRENGTH AS INDICATED IN THE PRECEDING TABLE AND SHALL CONFORM TO OSSC SECTION 2103. GROUT SHALL CONSIST OF A MIXTURE OF CEMENTITIOUS MATERIALS AND AGGREGATE TO WHICH SUFFICIENT WATER HAS BEEN ADDED TO CAUSE THE MIXTURE TO FLOW WITHOUT SEGREGATION OF THE CONSTITUENTS. ALL CELLS CONTAINING VERTICAL BARS AND ALL BOND BEAMS SHALL BE FILLED WITH GROUT. FULLY GROUT ALL STRUCTURAL MASONRY WALLS UNLESS NOTED OTHERWISE.

THE MAXIMUM GROUT POUR HEIGHT SHALL BE 12'-8". CLEAN-OUTS ARE REQUIRED FOR ANY POUR HEIGHT GREATER THAN 5'-4". WHERE REQUIRED, CLEAN-OUTS SHALL BE LOCATED AT ALL CORES CONTAINING VERTICAL REINFORCEMENT AND AT A MAXIMUM OF 32' O.C. GROUT LIFTS GREATER THAN 5'-4" ARE LIMITED IN HEIGHT TO THE BOTTOM OF THE LOWEST BOND BEAM THAT IS MORE THAN 5'-4" ABOVE THE BOTTOM OF THE LIFT, PROVIDED THAT: 1) THE MASONRY HAS CURED FOR AT LEAST 4 HOURS, AND 2) THE GROUT SLUMP IS MAINTAINED BETWEEN 10 AND 11 INCHES. IF EITHER OF THESE TWO CONDITIONS ARE NOT MET, THEN THE MAXIMUM LIFT HEIGHT SHALL BE 5'-4". REFERENCE TYPICAL MASONRY DETAILS.

MASONRY REINFORCING STEEL:
REINFORCING SHALL CONFORM TO OSSC SECTION 2103.14. DEFORMED BARS SHALL BE ASTM A615 GRADE 60, AND SHALL BE SECURELY PLACED IN ACCORDANCE WITH ACI 530.1-11 SPECIFICATION SECTION 3.4. WELDED REINFORCEMENT SHALL CONFORM TO ASTM A706 GRADE 60. UNLESS NOTED OTHERWISE ON THE PLANS, THE MINIMUM WALL REINFORCEMENT SHALL BE AS FOLLOWS:

RUNNING BOND PATTERN		
WALL THICKNESS	VERTICAL BARS	HORIZONTAL BARS (IN BOND BEAMS)
6"	#5 @ 48" o.c.	#5 @ 48" o.c.
8"	#6 @ 48" o.c.	(2) #4 @ 48" o.c.

REINFORCING STEEL SHALL BE DETAILED IN ACCORDANCE WITH THE "ACI MANUAL OF STANDARD PRACTICE FOR DETAILING REINFORCED CONCRETE STRUCTURES," ACI 315. SHOP DRAWINGS SHALL INCLUDE ELEVATIONS OF ALL STRUCTURAL CMU WALLS SHOWING LOCATIONS OF BOND BEAMS, BARS, AND OTHER SPECIAL REINFORCEMENT.

BOND BEAMS WITH TWO #5 BARS HORIZONTALLY SHALL BE PROVIDED AT ALL FLOOR AND ROOF LINES AND AT THE TOP OF WALLS. STEP BOND BEAMS AS REQUIRED TO MATCH ROOF SLOPES. PROVIDE A BOND BEAM WITH TWO #5 BARS HORIZONTALLY ABOVE AND BELOW ALL OPENINGS, AND EXTEND THESE BARS 2'-0" PAST THE OPENING AT EACH SIDE. PROVIDE ONE BAR, MATCHING VERTICAL BAR SIZE, FOR THE FULL HEIGHT OF THE WALL AT EACH SIDE OF OPENINGS, WALL ENDS, AND INTERSECTIONS. DOWELS TO MASONRY WALLS SHALL BE EMBEDDED A MINIMUM OF 1'-0" OR HOOKED INTO THE SUPPORTING STRUCTURE AND BE OF THE SAME SIZE AND SPACING AS WALL REINFORCING. PROVIDE CORNER BARS TO MATCH THE HORIZONTAL WALL REINFORCING AT WALL INTERSECTIONS. LAP ALL REINFORCING BARS AS FOLLOWS UNLESS NOTED OTHERWISE ON DRAWINGS:

TYP. LAP SPLICE LENGTH SCHEDULE (IN.)		
f'm=1,500 PSI	CASE 1	CASE 2
BAR SIZE	ALL BLOCK	8" BLOCK
#3	19	12
#4	34	14
#5	45	22
#6	54	43
#7	63	59
#8	72	72
#9	81	81

NOTES:
CASE 1: BARS LOCATED NEAR THE FACE OF BLOCK WITH ONLY MINIMUM COVER OR CELLS WITH MORE THAN (1) BAR AND ALL 6" BLOCK.

CASE 2: SINGLE BARS LOCATED AT THE CENTER OF A CELL.

1. FOR EPOXY COATED BARS, MULTIPLY LAP LENGTHS BY 1.5.
2. MAXIMUM OF (2) BARS IN (1) CELL ((4) AT LAP SPLICE.)
3. AT CONTRACTOR'S OPTION: PROVIDE MECHANICAL SPLICES FOR #8 AND #9 BARS.

REINFORCING STEEL COVER	
USE	MINIMUM COVER (TO OUTSIDE FACE OF MASONRY)
MASONRY FACE NOT EXPOSED TO EARTH OR WEATHER	1 1/2"
MASONRY FACE EXPOSED TO EARTH OR WEATHER	1 1/2" (#5 AND SMALLER)
	2" (#6 AND LARGER)

MASONRY ACCESSORIES:
ALL ANCHORS SHALL BE INSTALLED IN STRICT CONFORMANCE WITH MANUFACTURER'S RECOMMENDATIONS. REINFORCING IN NEW OR EXISTING MASONRY SHALL NOT BE CUT DURING INSTALLATION. ALL ANCHORS EXPOSED TO EARTH OR WEATHER SHALL BE PROTECTED FROM CORROSION BY HOT-DIP GALVANIZING OR USE OF STAINLESS STEEL.

MASONRY ANCHORS		
ANCHORS	TYPE	ALTERNATE
EXPANSION	HILTI KWIK BOLT 3 (ICC ESR-1385)	SIMPSON WEDGE-ALL (ICC ESR-1396)
SCREW	HILTI HUS-EZ (ICC ESR-3056)	SIMPSON TITEN HD (ICC ESR-1056)
ADHESIVE	HILTI HIT HY-70 (ICC ESR-2682)	SIMPSON SET (ICC ESR-1772)

NOTE:
1. MINIMUM GROUT COVER BETWEEN REINFORCEMENT AND INSIDE FACE OF CELL SHALL BE 1/4" FOR FINE GROUT AND 1/2" FOR COURSE GROUT.

PER KPFF PHONE CALL 9/12/17

STRUCTURAL STEEL:
STRUCTURAL STEEL SHALL BE:

STRUCTURAL STEEL	
MATERIAL GRADE	SHAPE
ASTM A992, GRADE 50	WIDE FLANGE SHAPES
ASTM A572, GRADE 50	PLATES WHERE NOTED
ASTM A36	CHANNELS, PLATES AND ANGLES, EXCEPT AS NOTED
ASTM A500, GRADE B (FY=46KSI)	HOLLOW STRUCTURAL SECTIONS (TUBES)
ASTM A53, GRADE B (FY=35 KSI)	PIPES

DESIGN, FABRICATION, AND ERECTION SHALL BE IN ACCORDANCE WITH THE "AISC SPECIFICATION FOR THE DESIGN, FABRICATION, AND ERECTION OF STRUCTURAL STEEL FOR BUILDINGS" WITH "COMMENTARY" AND THE "CODE OF STANDARD PRACTICE", WITH EXCEPTIONS NOTED IN SPECIFICATIONS.

BOLTS SHALL CONFORM TO THE ASTM AND RCSC SPECIFICATIONS FOR JOINTS USING A325 OR A490 HIGH STRENGTH BOLTS. BOLTS SHALL BE SNUG-TIGHT UNLESS NOTED OTHERWISE.

WELDING SHALL CONFORM TO THE AWS CODES FOR ARC AND GAS WELDING IN BUILDING CONSTRUCTION. WELDING SHALL BE PERFORMED IN ACCORDANCE WITH A WELDED PROCEDURE SPECIFICATION (WPS) AS REQUIRED IN AWS D1.1 AND APPROVED BY THE STRUCTURAL ENGINEER. THE WPS VARIABLES SHALL BE WITHIN THE PARAMETERS ESTABLISHED BY THE FILLER-METAL MANUFACTURER.

FOR COMPLETE JOINT PENETRATION WELDS ASSOCIATED WITH MEMBER SPLICES AND CONNECTIONS NOT PART OF THE SFRS, WELDS SHALL BE MADE WITH FILLER METAL THAT HAS A MINIMUM CVN TOUGHNESS OF 20 FT-LBS AT 40 DEGREES F.

WELDS SHALL BE MADE USING E70XX ELECTRODES AND SHALL BE 3/16" MINIMUM, UNLESS OTHERWISE NOTED. WELDING SHALL BE BY AWS CERTIFIED WELDERS MEETING CITY OF PORTLAND STANDARDS.

PROVIDE WEEP HOLES AT EXTERIOR CLOSED SECTIONS WHERE MOISTURE MAY ACCUMULATE.

STEEL DECK:
STEEL FLOOR DECK SHALL BE A COMPOSITE TYPE WITH RIBS AT 12" o.c. OF THE SIZE AND GAUGE INDICATED ON THE PLANS. STEEL FLOOR DECK SHALL BE VENTED. STEEL ROOF DECK SHALL BE 9/16" SHALLOW VERCOR OF THE GAUGE SHOWN ON THE PLANS. STEEL DECK SHALL CONFORM TO ASTM A653 DESIGNATION SS, GRADE 50 (Fy = 50 KSI). THE GALVANIZED COATING SHALL CONFORM TO ASTM A653, G 60 (G90 WHERE LEFT PERMANENTLY EXPOSED TO WEATHER).

MINIMUM DECK GAUGES ARE SHOWN ON PLANS AND ARE BASED ON 3-SPAN, UN-SHORED CONDITIONS. FOR OTHER SPAN CONDITIONS, DECK MANUFACTURER SHALL EVALUATE AND INDICATE SHORING AS REQUIRED. MINIMUM PROPERTIES SHALL BE AS FOLLOWS:

FLOOR DECK PROPERTIES			
DECK TYPE & GAUGE	I (IN^4/FT)	+S (IN^3/FT)	-S (IN^3/FT)
W3 - 18 GAUGE	1.213	0.782	0.788

ROOF DECK PROPERTIES			
DECK TYPE & GAUGE	I (IN^4/FT)	+S (IN^3/FT)	-S (IN^3/FT)
SHALLOW VERCOR 26 GAUGE	0.013	0.041	0.043

WELDED OR MECHANICAL DECK CONNECTIONS SHALL BE PROVIDED AT ALL SUPPORTS AND SIDELAPS AS INDICATED ON THE PLANS. DECK DESIGN IS BASED ON VERCO IN ACCORDANCE WITH IAPMO ES EVALUATION REPORT ER-0217. EQUAL PRODUCT(S) MAY BE SUBMITTED FOR REVIEW AND APPROVAL BY EOR.

DO NOT HANG OR SUSPEND STRUCTURAL ITEMS DIRECTLY FROM ROOF DECK. NON-STRUCTURAL ITEMS SUSPENDED FROM THE DECK SHALL BE REVIEWED AND APPROVED BY THE ARCHITECT AND STRUCTURAL ENGINEER PRIOR TO INSTALLATION.

LIGHT GAUGE METAL FRAMING:
METAL STUDS SHALL BE C-STUDS WITH A MINIMUM YIELD STRENGTH OF 33,000 PSI FOR 33 AND 43 MIL AND 50,000 PSI FOR 54, 68 AND 97 MIL THICKNESSES. GAUGE PLATE AND STRAPS SHALL HAVE A MINIMUM YIELD STRENGTH OF 30,000 PSI FOR 33 AND 43 MIL AND 50,000 PSI FOR 54, 68 AND 97 MIL THICKNESSES. LIGHT GAUGE FRAMING SHALL BE OF THE SIZE, GAUGE, AND SPACING SHOWN ON THE DRAWINGS.

THE AMERICAN IRON AND STEEL INSTITUTE AND STEEL STUD MANUFACTURES ASSOCIATION (SSMA) STANDARDS ARE USED IN THIS PACKAGE. PRODUCTS USED SHALL MEET OR EXCEED AISI STANDARDS AND ARE DESIGNATED BY:

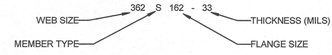

PROVIDE BRIDGING ADEQUATE TO DEVELOP THE FULL MOMENT CAPACITY OF STUDS IN CONFORMANCE WITH THE STEEL STUD MANUFACTURERS ASSOCIATION'S (SSMA) RECOMMENDATIONS.

ALL FIELD CUTTING OF STUDS MUST BE BY SAWING, SHEARING, OR PLASMA CUTTING. OTHER CUTTING METHODS OF COLD-FORMED MEMBERS ARE UNACCEPTABLE.

NO NOTCHING OR COPING OF STUDS IS ALLOWED, UNLESS NOTED OTHERWISE.

SPLICING OF WALL STUDS OR HEADERS IS NOT ALLOWED, UNLESS NOTED OTHERWISE.

CONTRACTOR TO ENSURE PUNCH OUT ALIGNMENT WHEN ASSEMBLING LATERAL BRACING AND FIELD CUTTING STUDS TO LENGTH.

ALL HEADERS/BUILT-UP BEAMS ARE TO BE CONSTRUCTED WITH UNPUNCHED MATERIAL ONLY.

LIGHT GAUGE FRAMING CONNECTIONS SHALL BE AS FOLLOWS:

LIGHT GAUGE METAL FRAMING CONNECTIONS	
FASTENER	PRODUCT
SCREWS	ELCO DRIL-FLEX OR HILTI KWIK-FLEX (ESR-3332)
PAFS	HILTI X-U (ESR-2269)

FOR SCREWS, PROVIDE 3/4" MINIMUM CLEARANCE FROM ALL EDGES AND 3/4" MINIMUM CENTER TO CENTER SPACING.

FASTENERS OF COMPARABLE SPECIFICATIONS AND LOAD CAPACITIES MAY BE SUBMITTED FOR APPROVAL.

WELDING SHALL CONFORM WITH AWS D1.3.

LRS ARCHITECTS
720 NW Davis 503.221.1121
Suite 300 503.221.2077
Portland OR 97209 www.lrsarchitects.com

STRUCTURAL ENGINEER REGISTERED PROFESSIONAL 79476PE OREGON JULY 13, 2001 JOSHUA P. RICHARDS
EXPIRES 12-31-18

LEVERARCHITECTURE
4713 N ALBINA AVE, PDX OR 97217
T 503 928 6040
www.leverarchitecture.com

CONSULTANT:

kpff
111 SW Fifth Ave., Suite 2500
Portland, OR 97204
O: 503.227.3251
F: 503.227.7980
www.kpff.com

PROJECT NUMBER: 1600385-R17

GRAND AVENUE APARTMENTS

1010 NE GRAND AVE. PORTLAND, OR 97232

SHEET TITLE:
GENERAL STRUCTURAL NOTES CONT.

DRAWN BY: BJS
DATE CREATED: 08-10-2017

A	Plan Check Review	09.01.2017

City of Portland REVIEWED FOR CODE COMPLIANCE DEC 22 2017 Permit Number

RECEIVED SEP 06 2017 BDS DOCUMENT SERVICES

SHEET:
S003
ADDENDUM #1
08-10-2017

LRS Architects, Inc. ©2017

SPECIAL INSPECTIONS AND TESTING

TABLE 1 - REQUIRED GEOTECHNICAL SPECIAL INSPECTIONS

SYSTEM OR MATERIAL	INSPECTION: OSSC CODE REFERENCE	INSPECTION: CODE OR STANDARDS REFERENCE	INSPECTION: FREQUENCY (NOTE 6): CONTINUOUS	INSPECTION: FREQUENCY (NOTE 6): PERIODIC	REMARKS
SOILS					
VERIFY MATERIALS BELOW FOOTINGS ARE ADEQUATE TO ACHIEVE THE DESIGN BEARING CAPACITY	1705.6	GEOTECHNICAL REPORT		X	BY THE GEOTECHNICAL ENGINEER
VERIFY EXCAVATIONS ARE EXTENDED TO PROPER DEPTH AND HAVE REACHED PROPER MATERIAL				X	
PERFORM CLASSIFICATION AND TESTING OF CONTROLLED FILL MATERIALS				X	
VERIFY USE OF PROPER MATERIALS, DENSITIES AND LIFT THICKNESSES DURING PLACEMENT AND COMPACTION OF CONTROLLED FILL			X		
PRIOR TO PLACEMENT OF CONTROLLED FILL, OBSERVE SUBGRADE AND VERIFY THAT SITE HAS BEEN PREPARED PROPERLY				X	
CAST IN PLACE PIER FOUNDATIONS					
OBSERVE DRILLING OPERATIONS AND MAINTAIN COMPLETE AND ACCURATE RECORDS FOR EACH PIER	1705.8	GEOTECHNICAL REPORT	X		BY THE GEOTECHNICAL ENGINEER
VERIFY PLACEMENT LOCATIONS AND PLUMBNESS, CONFIRM PIER DIAMETERS, BELL DIAMETERS (IF APPLICABLE), LENGTHS, EMBEDMENT INTO BEDROCK (IF APPLICABLE) AND ADEQUATE END BEARING STRATA CAPACITY. RECORD CONCRETE OR GROUT VOLUMES			X		BY THE GEOTECHNICAL ENGINEER
FOR CONCRETE PIERS, PERFORM ADDITIONAL INSPECTIONS	1705.3 1705.8				REFER TO TABLE 2 FOR ADDITIONAL MATERIALS RELATED SPECIAL INSPECTIONS AND TABLE 6 FOR TESTING BY SPECIAL INSPECTOR

TABLE 2A - REQUIRED STRUCTURAL STEEL SPECIAL INSPECTIONS

SYSTEM OR MATERIAL	INSPECTION: OSSC CODE REFERENCE	INSPECTION: CODE OR STANDARD REFERENCE	INSPECTION (NOTES 5 AND 6): CONTINUOUS	INSPECTION (NOTES 5 AND 6): PERIODIC	INSPECTION (NOTES 5 AND 6): OBSERVE	INSPECTION (NOTES 5 AND 6): PERFORM	REMARKS
STEEL							
CONTRACTOR QUALITY CONTROL REQUIREMENTS		AISC 360 CHAPTER N			X	X	CONTRACTOR TO PROVIDE QUALITY CONTROL FOR ALL ITEMS INDICATED TO BE OBSERVE AND/OR PERFORM IN TABLE BELOW
STEEL FABRICATION							
FABRICATION OF STRUCTURAL ELEMENTS	1704.2.5.2	AISC 360 N2		X			REFER TO INSPECTION OF FABRICATOR REQUIREMENTS
MATERIAL VERIFICATION OF STRUCTURAL STEEL	1705.2.1 2203.1 TABLE 1705.2	ASTM A6 ASTM STANDARDS SPECIFIED IN CONSTRUCTION DOCUMENTS AISC 360 A3.1 AISC 360 N3.2		X			CERTIFIED MILL TEST REPORTS
FOR OTHER STEEL, IDENTIFICATION MARKINGS TO CONFORM TO ASTM STANDARDS SPECIFIED IN THE APPROVED CONSTRUCTION DOCUMENTS	TABLE 1705.2	APPLICABLE ASTM STANDARDS		X			MANUFACTURER'S CERTIFIED TEST REPORTS
MATERIAL VERIFICATION OF HIGH STRENGTH BOLTS, NUTS, AND WASHERS		AISC 360 A3.3 AISC 360 N3.2 ASTM STANDARDS SPECIFIED IN CONSTRUCTION DOCUMENTS RCSC 2.1		X			MANUFACTURER'S CERTIFIED TEST REPORTS
MATERIAL VERIFICATION OF ANCHOR BOLTS AND THREADED RODS		AISC 360 A3.4 AISC 360 N3.2 ASTM STANDARDS SPECIFIED IN CONSTRUCTION DOCUMENTS		X			MANUFACTURER'S CERTIFIED TEST REPORTS
MATERIAL VERIFICATION OF WELD FILLER METALS	TABLE 1705.2	AISC 360 A3.5 AISC 360 N3.2 APPLICABLE AWS A5 DOCUMENTS		X			MANUFACTURER'S CERTIFIED TEST REPORTS
STRUCTURAL STEEL WELDING							
VERIFYING USE OF PROPER WPS'S		AISC 360 N3.2					RETAIN A RECORD OF WELDING PROCEDURE SPECIFICATIONS
VERIFYING WELDER QUALIFICATIONS	1705.2.2.1			X			RETAIN A RECORD OF QUALIFICATION CARDS
COMPLETE AND PARTIAL JOINT PENETRATION GROOVE WELDS	TABLE 1705.2	AWS D1.1 SECTION 6	X				
MULTIPASS FILLET WELDS			X				
SINGLE PASS FILLET WELDS GREATER THAN 5/16"			X				ALL WELDS VISUALLY INSPECTED PER AWS D1.16.9
PLUG AND SLOT WELDS			X				
SINGLE PASS FILLET WELDS LESS THAN OR EQUAL TO 5/16"				X			
WELDING STAIR AND RAILING SYSTEMS	1705.2(2.5)	AWS D1.1 SECTION 6		X			ALL WELDS VISUALLY INSPECTED PER AWS D1.1 6.9
REINFORCING STEEL WELDING							SEE CONCRETET SECTION
PLACEMENT AND INSTALLATION OF STEEL DECK	1705.2	AISC 360 TABLE N6.1				X	
PLACEMENT AND INSTALLATION OF STEEL HEADED STUD ANCHOS						X	
DOCUMENT ACCEPTANCE OR REJECTION OF STEEL ELEMENTS						X	
HIGH-STRENGTH BOLTING							
SNUG-TIGHT HIGH STRENGTH BOLT INSTALLATION	1705.2.1	RCSC SPECIFICATION FOR STRUCTURAL JOINTS USING ASTM A325 OR A490 BOLTS SECTION 9 AISC 360 SECTION M2.5		X			ALL CONNECTIONS VISUALLY INSPECTED AND VERIFIED SNUG
INSPECTION TASKS PRIOR TO BOLTING	1705.2	AISC 360 TABLE N5.6-1					
MANUFACTURER"S CERTIFICATIONS AVAILABLE FOR FASTENER MATERIALS						X	
FASTENERS MARKED IN ACCORDANCE WITH ASTM REQUIREMENTS					X		
PROPER FASTENERS SELECTED FOR THE JOINT DETAIL (GRADE, TYPE, BOLT LENGTH, IF THREADS ARE TO BE EXCLUDED FROM THE SHEAR PLANE)					X		
PROPER BOLTING PROCEDURE SELECTED FOR JOINT DETAIL					X		
PROPER STORAGE PROVIDED FOR BOLTS, NUTS, WASHERS AND OTHER FASTENER COMPONENTS					X		
INSPECTION TASKS DURING BOLTING	1705.2	AISC 360 TABLE N5.6-2 RCSC SPECIFICATION FOR STRUCTURAL JOINTS USING ASTM A325 OR A490 BOLTS SECTION 9					
FASTENER ASSEMBLIES, OF SUITABLE CONDITION, PLACED IN ALL HOLES AND WASHERS (IF REQUIRED) ARE POSITIONED AS REQUIRED					X		
INSPECTION TASKS AFTER BOLTING	1705.2	AISC 360 TABLE N5.6-3					
DOCUMENT ACCEPTANCE OR REJECTION OF BOLTED CONNECTIONS						X	

TABLE 2 - REQUIRED STRUCTURAL SPECIAL INSPECTIONS

SYSTEM OR MATERIAL	INSPECTION: OSSC CODE REFERENCE	INSPECTION: CODE OR STANDARD REFERENCE	INSPECTION: FREQUENCY (NOTE 6): CONTINUOUS	INSPECTION: FREQUENCY (NOTE 6): PERIODIC	REMARKS
FABRICATORS					
FABRICATORS	1704.2.5			X	SPECIAL INSPECTION IS REQUIRED FOR STRUCTURAL LOAD-BEARING MEMBERS AND ASSEMBLIES FABRICATED ON THE PREMISES OF A FABRICATOR'S SHOP PER TABLE 2 AND AS REQUIRED ELSEWHERE IN THE SPECIAL INSPECTION PROGRAM. THE SPECIAL INSPECTOR SHALL VERIFY THAT THE FABRICATOR MAINTAINS DETAILED FABRICATION AND QUALITY CONTROL PROCEDURES AND SHALL REVIEW FOR COMPLETENESS AND ADEQUACY RELATIVE TO THE CODE REQUIREMENT. REFERENCE SECTION 1704.2.5.2 FOR APPROVED FABRICATOR EXCEPTION.
DEFERRED SUBMITTALS					
DEFERRED SUBMITTALS			X	X	SPECIAL INSPECTION REQUIREMENTS FOR DEFERRED SUBMITTAL ITEMS TO BE SPECIFIED BY THE SYSTEMS ENGINEER AND INCLUDED WITH DEFERRED SUBMITTAL DOCUMENTS.
CONCRETE					
GENERAL	1705.3 1901.4	ACI 318 1.3			SPECIAL INSPECTIONS OF CONCRETE SHALL CONFORM TO THE REQUIREMENTS OF SECTION 1705.3 OF THE OSSC AND SECTION 1.3 OF ACI 318.
REINFORCING STEEL AND (POST TENSIONED/PRETENSIONED) TENDON PLACEMENT	1910.4 1901.3.2	ACI 318 3.5 ACI 318 7.1 TO 7.7		X	REINFORCING TO COMPLY WITH ALL CODE PROTECTION, SPACING AND TOLERANCE LIMITS.
WELDING REINFORCING STEEL	1705.2.2 1903.1	AWS D1.4 ACI 318: 3.5.2			
1. VERIFICATION OF WELDABILITY OF REINFORCING STEEL OTHER THAN ASTM A 706				X	
2. REINFORCING STEEL BOUNDARY ELEMENTS OF SPECIAL STRUCTURAL WALLS			X		
3. SHEAR REINFORCEMENT			X		
4. OTHER REINFORCING STEEL				X	
PLACEMENT OF CAST IN PLACE BOLTS	1908.5 1909.1		X		ALL BOLTS VISUALLY INSPECTED
VERIFYING USE OF REQUIRED MIX DESIGN(S)	1904.2 1910.2 1910.3	ACI 318, CH. 4 ACI 318 5.2-5.4		X	
CONCRETE PLACEMENT		ACI 318 5.9-5.10	X		
CONCRETE PLACEMENT AT COMPOSITE SLABS		ASCE 9, CH. 3	X		
CONCRETE/SHOTCRETE CURING	1910.9	ACI 318 5.11-5.13		X	
VERIFICATION OF IN-SITU CONCRETE STRENGTH PRIOR TO STRESSING OF TENDONS IN POST-TENSIONED CONCRETE		ACI 318 6.2		X	
PRESTRESSED / POST-TENSIONED CONCRETE					
1. APPLICATION OF PRESTRESSING FORCES		ACI 318 18.20	X		
VERIFICATION OF IN-SITU CONCRETE PRIOR TO REMOVAL OF FORMS AND SHORES FROM ELEVATED BEAMS AND SLABS		ACI 318 6.2		X	
VERIFICATION OF FORMWORK		ACI 318 6.1.1		X	SPECIAL INSPECTIONS APPLY TO SHAPE, LOCATION AND DIMENSIONS OF THE CONCRETE MEMBER BEING FORMED
EMBEDDED ITEMS IN CONCRETE				X	ALL NON-STRUCTRAL EMBEDDED ITEMS, SUCH AS CONDUITS, PIPES AND SLEEVES, SHALL BE REVIEWED FOR CONFORMANCE WITH STRUCTURAL DOCUMENTS FOR SIZE, SPACING, LOCATION, EDGE DISTANCE AND TRIM REINFORING.
REINFORCING STEEL MECHANICAL COUPLERS, TERMINATORS AND FORMSAVERS		ICC EVALUATION REPORTS		X	
MASONRY LEVEL B QUALITY ASSURANCE					
1. VERIFY COMPLIANCE WITH THE CONTRACT DOCUMENTS AND APPROVED SUBMITTALS		TMS 602 ART. 1.5		X	
2. AS MASONRY CONSTRUCTION BEGINS, VERIFY THAT THE FOLLOWING ARE IN COMPLIANCE:					
A. PROPORTIONS OF SITE-PREPARED MORTAR		TMS 602 ART. 2.1, 2.6 A		X	
B. CONSTRUCTION OF MORTAR JOINTS		TMS 602 ART. 3.3 B		X	
3. PRIOR TO GROUTING, VERIFY THAT THE FOLLOWING ARE IN COMPLIANCE:					
A. GROUT SPACE		TMS 602 ART. 3.2 D, 3.2 F		X	
B. GRADE, TYPE, AND SIZE OF REINFORCEMENT AND ANCHOR BOLTS		TMS 402 SEC. 1.16; TMS 602 ART. 2.4, 3.4		X	
C. PLACEMENT OF REINFORCEMENT AND CONNECTORS		TMS 402 SEC. 1.16; TMS 602 ART. 3.2 E, 3.4, 3.6 A		X	
D. PROPORTIONS OF SITE-PREPARED GROUT		TMS ART. 2.6 B, 2.4 G.1.b		X	
E. CONSTRUCTION OF MORTAR JOINTS		TMS 602 ART. 3.3 B		X	
4. VERIFY DURING CONSTRUCTION					
A. SIZE AND LOCATION OF STRUCTURAL ELEMENTS		TMS 602 ART. 3.3F		X	
B. TYPE, SIZE AND LOCATION OF ANCHORS, INCLUDING OTHER DETAILS OF ANCHORAGE OF MASONRY TO STRUCTURAL MEMBERS, FRAMES , OR OTHER CONSTRUCTION		TMS 402 SEC. 1.16.4.3, 1.17.1		X	
C. WELDING OF REINFORCEMENT		TMS 402 SEC. 2.1.7.7.2, 3.3.3.4(c), 8.3.3.4(b)	X		
D. PREPARATION, CONSTRUCTION, AND PROTECTION OF MASONRY DURING COLD WEATHER (TEMPERATURE BELOW 40F (4.4C)) OR HOT WEATHER (TEMPERATURE ABOVE 90F (32.2C))		TMS 602 ART. 1.8C, 1.8D		X	
5. OBSERVE PREPARATION OF GROUT SPECIMENS, MORTAR SPECIMENS, AND/OR PRISMS		TMS 602 ART. 1.4 B.2.a.3, 1.4 B.2.b.3, 1.4 B.2.c.3, 1.4 B.3, 1.4 B.4		X	
STEEL					
REFERENCE TABLE 2A FOR REQUIRED SPECIAL INSPECTIONS FOR STEEL					
COLD-FORMED STEEL FRAMING					
MATERIAL VERIFICATION OF WELD FILLER METALS		AWS D1.3 SECTION 7		X	MANUFACTURER'S CERTIFIED TEST REPORTS
VERIFYING USE OF PROPER WPS'S				X	RETAIN A RECORD OF WELDING PROCEDURE SPECIFICATIONS
VERIFYING WELDER QUALIFICATIONS	1705.2.2.1			X	RETAIN A RECORD OF QUALIFICATION CARDS
COLD FORMED ROOF AND FLOOR DECKS	1705.2.2.1.1	AWS D1.3		X	WELDING INSPECTION AND INSPECTOR QUALIFICATION
WELDED FRAMING CONNECTIONS	1705.2.2.1	AWS D1.3 SECTION 7		X	ALL WELDS VISUALLY INSPECTED PER AWS D1.3 7.1
POST INSTALLED CONCRETE ANCHORS					
POST INSTALLED ANCHORS INSTALLATION IN HARDENED CONCRETE AND COMPLETED MASONRY	1908.5 1909.1	ACI 318: 1.3, 3.8.6		X (NOTE 8)	INSPECTION REQUIREMENTS PER ICC EVALUATION REPORT

LRS ARCHITECTS
720 NW Davis 503.221.1121
Suite 300 503.221.2077
Portland OR 97209 www.lrsarchitects.com

STRUCTURAL REGISTERED PROFESSIONAL ENGINEER 19473PE OREGON JOSHUA P. RICHARDS
EXPIRES 12-31-18

LEVERARCHITECTURE
4713 N ALBINA AVE, PDX OR 97217
T 503 928 6040
www.leverarchitecture.com

CONSULTANT:

kpff
111 SW Fifth Ave., Suite 2500
Portland, OR 97204
O: 503.227.3251
F: 503.227.7980
www.kpff.com

PROJECT NUMBER: 1600385-R17

GRAND AVENUE APARTMENTS

1010 NE GRAND AVE. PORTLAND, OR 97232

SHEET TITLE:

SPECIAL INSPECTIONS AND TESTING

DRAWN BY: BJS
DATE CREATED: 07-14-2017

City of Portland REVIEWED FOR CODE COMPLIANCE DEC 22 2017 Permit Number

SHEET:

S004

PERMIT SET 07-14-2017

LRS Architects, Inc. ©2017

SPECIAL INSPECTIONS AND TESTING CONTINUED

TESTING

TABLE 3 - REQUIRED TESTING FOR SPECIAL INSPECTIONS

SYSTEM OR MATERIAL	INSPECTION				REMARKS
	OSSC CODE REFERENCE	CODE OR STANDARD REFERENCE	FREQUENCY (NOTE 6)		
			CONTINUOUS	PERIODIC	
GEOTECHNICAL					
FILL IN-PLACE DENSITY OR PREPARED SUBGRADE DENSITY	1705.6	VARIES; GEOTECHNICAL REPORT OR MINIMUM PER IBC APPENDIX J107.5, WHICHEVER IS GREATER		X	BY THE GEOTECHNICAL ENGINEER
MATERIAL VERIFICATION		VARIES; CLASSIFICATION AND TESTING OF CONTROLLED FILL MATERIALS		X	BY THE GEOTECHNICAL ENGINEER
TEST PILES					BY THE GEOTECHNICAL ENGINEER
CONCRETE					
CONCRETE STRENGTH	1705.3 ASTM C172 ASTM C 31 ACI318.5.6,5.8	ASTM C39	EACH 150 CY NOR LESS THAN EACH 5000 SF OF SLAB OR WALL PLACED EACH SHIFT		FABRICATE SPECIMENS AT TIME FRESH CONCRETET IS PLACED
CONCRETE SLUMP		ASTM C143			
CONCRETE AIR CONTENT		ASTM C231			
CONCRETE TEMPERATURE		ASTM C1064			
MASONRY					
MASONRY LEVEL B QUALITY ASSURANCE - Minimum Tests					
Verification of slump flow and Visual Stability Index (VSI) as delivered to the project site in accordance with Specification Article 1.5 B.1.b.3 for self-consolidating grout					
Verification of f'm in accordance with Specification Article 1.4 B prior to construction, except where specifically exempted by this Code					
STEEL					
ULTRASONIC (UT) TESTING OF WELDS	1705.2.2	AWS D1.1 6.13 & 6.14.3			ALL C.J.P. WELDS 5/16" AND THICKER REQUIRE UT TESTING.
MAGNETIC PARTICLE (MT) TESTING OF WELDS	1705.2.2	AWS D1.1 6.14.4 AISC360 N5.5c			REQUIRED AT THERMALLY CUT ACCESS HOLES WHERE FLANGE THICKNESS EXCEEDS 2" FOR ROLLED SHAPES OR WHEN THE WEB THICKNESS EXCEEDS 2" FOR BUILT-UP SHAPES. REQUIRED WHERE SPECIFICALLY NOTED ON DRAWINGS OR AS DIRECTED BY KPFF AT WELDS IDENTIFIED TO BE IN QUESTION BASED ON INSPECTIONS
PRE-CONSTRUCTION TESTING OF WELDING STUDS	1705.2.2	AWS D1.1 7.7.1	EACH SIZE AND TYPE OF STUD EACH SHIFT		THIS TESTING PERFORMED BY CONTRACTOR AND CONFIRMED BY SPECIAL INSPECTOR
STUD APPLICATION QUALIFICATION	1705.2.2	AWS D1.1 7.6	NON-PREQUALIFIED APPLICATIONS		THIS TESTING PERFORMED BY CONTRACTOR AND CONFIRMED BY SPECIAL INSPECTOR

TABLE 4 - REQUIRED TESTING FOR SEISMIC RESISTANCE SPECIAL INSPECTIONS

SYSTEM OR MATERIAL	INSPECTION			REMARKS
	OSSC CODE REFERENCE	CODE OR STANDARD REFERENCE	FREQUENCY	
CONCRETE REINFORCEMENT				
TEST A615 REINFORCEMENT IN SPECIAL MOMENT FRAMES, SPECIAL STRUCTURAL WALLS, AND END COUPLING BEAMS CONNECTING STRUCTURAL WALLS	1705.12.1	ACI 318: 21.1.5.2		NOT REQUIRED WHEN CERTIFIED MILL TEST REPORTS ARE PROVIDED. REFERENCE DRAWINGS FOR LOCATIONS
TEST A615 REINFORCEMENT FOR WELDABILITY WHEN SUCH REINFORCEMENT IS TO BE WELDED	1705.12.1	ACI 318: 3.5.2		

STATEMENT OF SPECIAL INSPECTION NOTES:

1. SPECIAL INSPECTIONS SHALL CONFORM TO SECTION 1705 OF THE 2014 OSSC, CONTRACT DOCUMENTS AND APPROVED SUBMITTALS. REFER TO TABLES 1 THROUGH 2A FOR SPECIAL INSPECTION AND TABLES 3 AND 4 FOR TESTING REQUIREMENTS.

2. SPECIAL INSPECTIONS AND ASSOCIATED TESTING SHALL BE PERFORMED BY AN APPROVED ACCREDITED INDEPENDENT AGENCY MEETING THE REQUIREMENTS OF ASTM E329 (MATERIALS). THE INSPECTION AND TESTING AGENCY SHALL FURNISH TO THEARCHITECT A COPY OF THEIR SCOPE OF ACCREDITATION. SPECIAL INSPECTORS SHALL BE APPROVED BY THE BUILDING OFFICIAL. WELDING INSPECTORS SHALL BE QUALIFIED PER SECTION 6.1.4.1.1 OF AWS D1.1.

3. THE SPECIAL INSPECTOR SHALL OBSERVE THE INDICATED WORK FOR COMPLIANCE WITH THE APPROVED CONSTRUCTION DOCUMENTS. ALL DISCREPANCIES SHALL BE BROUGHT TO THE ATTENTION OF THE CONTRACTOR FOR CORRECTION AND NOTED IN THE INSPECTION REPORTS.

4. THE SPECIAL INSPECTOR AND GEOTECHNICAL ENGINEER SHALL FURNISH INSPECTION REPORTS FOR EACH INSPECTION TO THE BUILDING OFFICIAL,STRUCTURAL ENGINEER, ARCHITECT, CONTRACTOR, AND OWNER. THE SPECIAL INSPECTION AGENCY SHALL SUBMIT A FINAL REPORT STATING THAT THE WORK REQUIRING SPECIAL INSPECTION WAS INSPECTED AND IS IN CONFORMANCE WITH THE APPROVED CONSTRUCTION DOCUMENTS AND THAT ALL DISCREPANCIES NOTED IN THE INSPECTION REPORTS HAVE BEEN CORRECTED.

5 FOR STEEL INSPECTIONS PER AISC 360 AND 341 (TABLE 2A):
QUALITY ASSURANCE (QA) IS REQUIRED FOR EACH ITEM IN TABLES UNLESS SPECIFICALLY NOTED OTHERWISE.
QUALITY CONTORL (QC) TO BE PROVIDED BY THE FABRICATOR, ERECTOR OR OTHER RESPONSIBLE CONTRACTOR AS APPLICABLE. CONTRACTOR AND SPECIAL INSPECTOR TO DOCUMENT QUALITY CONTROL AS REQUIRED IN AISC 360 SECTION N3 AND AISC 341 SECTION J2.

6 INSPECTION TYPES
CONTINUOUS : THE FULL-TIME OBSERVATION OF WORK REQUIRING SPECIAL INSPECTION BY AN APPROVED SPECIAL INSPECTOR WHO IS PRESENT IN THE AREA WHERE THE WORK IS BEING PERFORMED.
PERIODIC : THE PART-TIME OR INTERMITTENT OBSERVATION OF WORK REQUIRING SPECIAL INSPECTION BY AN APPROVED SPECIAL INSPECTOR WHO IS PRESENT IN THE AREA WHERE THE WORK HAS BEEN OR IS BEING PERFORMED AND AT THE COMPLETION OF THE WORK.
OBSERVE : OBSERVE THESE FUNCTIONS ON A RANDOM, DAILY BASIS. OPERATIONS NEED NOT BE DELAYED PENDING OBSERVATIONS.
PERFORM : INSPECTIONS SHALL BE PERFORMED PRIOR TO THE FINAL ACCEPTANCE OF THE ITEM.

7 PERFORM INSPECTION PRIOR TO FINAL ACCEPTANCE OF THE ITEM FOR TEN WELDS TO BE MADE BY A GIVEN WELDER, WITH THE WELDER DEMONSTRATING UNDERSTANDING OF REQUIREMENTS AND POSSESSION OF SKILLS AND TOOLS TO VERIFY THESE ITEMS, THE PERFORM DESIGNATION OF THIS TASK SHALL BE REDUCED TO OBSERVE, AND THE WELDER SHALL PERFORM THIS TASK. SHOULD THE INSPECTOR DETERMINE THAT THE WELDER HAS DISCONTINUED PERFORMANCE OF THIS TASK, THE TASK SHALL BE RETURNED TO PERFORM UNTIL SUCH TIME AS THE INSPECTOR HAS RE-ESTABLISHED ADEQUATE ASSURANCE THAT THE WELDER WILL PERFORM THE INSPECTION TASKS LISTED

8 SPECIAL INSPECTION OF MECHANICAL POST INSTALLED ANCHORS SHALL BE IN STRICT CONFORMANCE WITH THE ICC REPORT AND MANUFACTURERS INSTALLATION REQUIREMENTS. ANCHOR INSTALLERS SHALL BE QUALIFIED AS REQUIRED BY JURISDICTION REQUIREMENTS.
- INSPECTION REPORTS SHALL IDENTIFY NAMES OF INSTALLERS.
- SPECIAL INSPECTOR SHALL PROVIDE DOCUMENTATION AT THE END OF ANCHOR INSTALLATIONS STATING THAT THE ANCHORS WERE INSPECTED PER APPROVED ANCHOR EVAULATION REPORT.

9 **TABLE 7 ABBREVIATIONS:**
NDT - NON-DESTRUCTIVE TESTING
CJP - COMPLETE JOINT PENETRATION
MT - MAGNETIC PARTICLE TESTING
RBS - REDUCED BEAM SECTION

10 DOCUMENT (D): INDICATES CONTRACTOR AND SPECIAL INSPECTOR TO PROVIDE DOCUMENTATION IN ACCORDANCE WITH AISC 341.

LRS ARCHITECTS
720 NW Davis 503.221.1121
Suite 300 503.221.2077
Portland OR 97209 www.lrsarchitects.com

STRUCTURAL REGISTERED PROFESSIONAL ENGINEER 79478PE OREGON JOSHUA P. RICHARDS
EXPIRES 12-31-18

LEVERARCHITECTURE
4713 N ALBINA AVE, PDX OR 97217
T 503 928 6040
www.leverarchitecture.com

CONSULTANT:

kpff
111 SW Fifth Ave., Suite 2500
Portland, OR 97204
O: 503.227.3251
F: 503.227.7980
www.kpff.com

PROJECT NUMBER: 1600385-R17

GRAND AVENUE APARTMENTS

1010 NE GRAND AVE. PORTLAND, OR 97232

SHEET TITLE:
SPECIAL INSPECTIONS AND TESTING CONT.

DRAWN BY: BJS
DATE CREATED: 07-14-2017

City of Portland REVIEWED FOR CODE COMPLIANCE DEC 22 2017 Permit Number

SHEET:
S005
PERMIT SET 07-14-2017

LRS Architects, Inc. ©2017

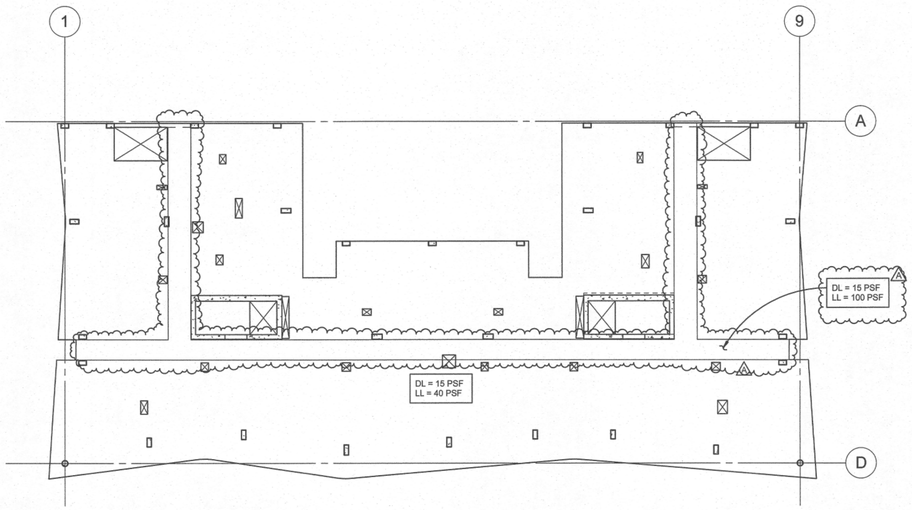

3 LOADING - THIRD - TWELFTH FLOORS
1/16" = 1'-0"

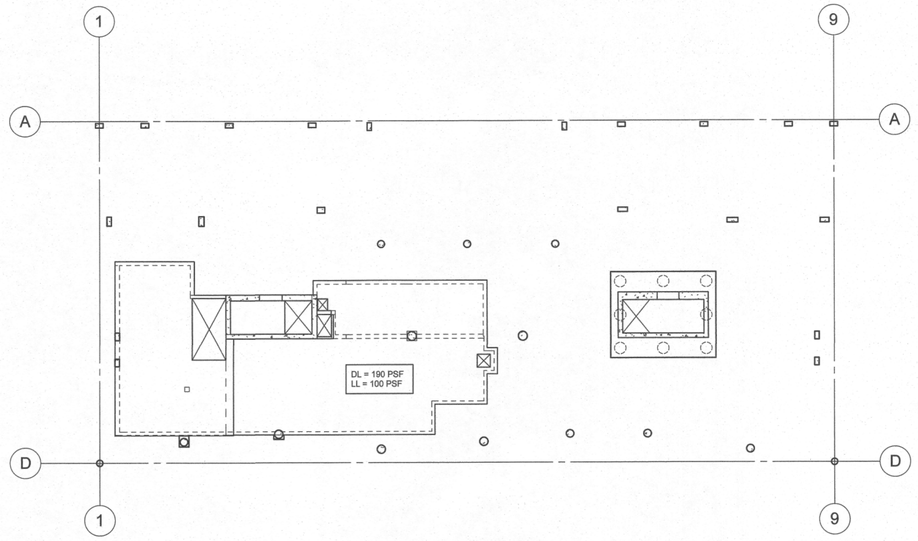

1 LOADING - FIRST FLOOR
1/16" = 1'-0"

ALL STAIR WELL LOADING TO BE 100PSF LL, TYP.

PER KPFF PHONE CALL 9/14/17

NOTES:

1. FLOOR DEAD LOADS INDICATED ARE SUPERIMPOSED LOADS ONLY. 190 PSF CORRESPONDS TO A 5" SLAB ON GRADE OVER 1'-0" STRUCTURAL BACK FILL
2. INDICATES ADDITIONAL LOAD DUE TO SNOW DRIFT ON TOP OF UNIFORM MIN. SNOW LOAD.

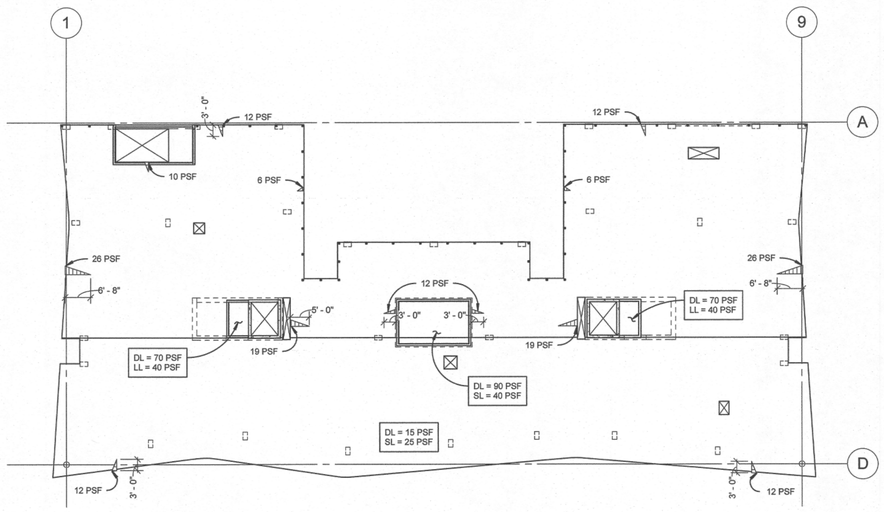

4 LOADING - ROOF
1/16" = 1'-0"

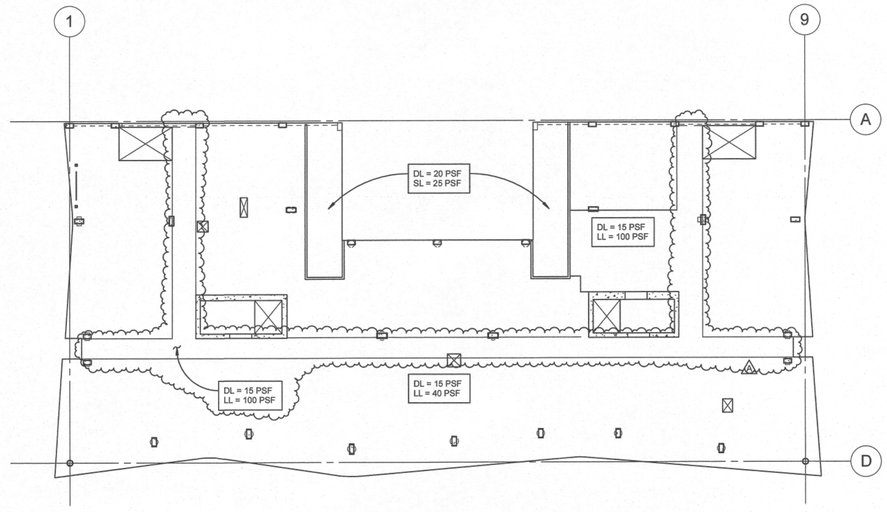

2 LOADING - SECOND FLOOR
1/16" = 1'-0"

LRS ARCHITECTS
720 NW Davis 503.221.1121
Suite 300 503.221.2077
Portland OR 97209 www.lrsarchitects.com

STRUCTURAL REGISTERED PROFESSIONAL ENGINEER 79476PE OREGON JULY 15, 2005 JOSHUA P. RICHARDS
EXPIRES 12-31-18

LEVERARCHITECTURE
4713 N ALBINA AVE, PDX OR 97217
T 503 928 6040
www.leverarchitecture.com

CONSULTANT:

kpff
111 SW Fifth Ave., Suite 2500
Portland, OR 97204
O: 503.227.3251
F: 503.227.7980
www.kpff.com

PROJECT NUMBER: 1600385-R17

GRAND AVENUE APARTMENTS

1010 NE GRAND AVE. PORTLAND, OR 97232

SHEET TITLE:
LOADING PLANS

DRAWN BY: BJS
DATE CREATED: 08-10-2017

A	Plan Check Review	09.01.2017

City of Portland REVIEWED FOR CODE COMPLIANCE DEC 22 2017 Permit Number
RECEIVED SEP 06 2017 BDS DOCUMENT SERVICES

SHEET:
S010
ADDENDUM #1
08-10-2017

LRS Architects, Inc. ©2017

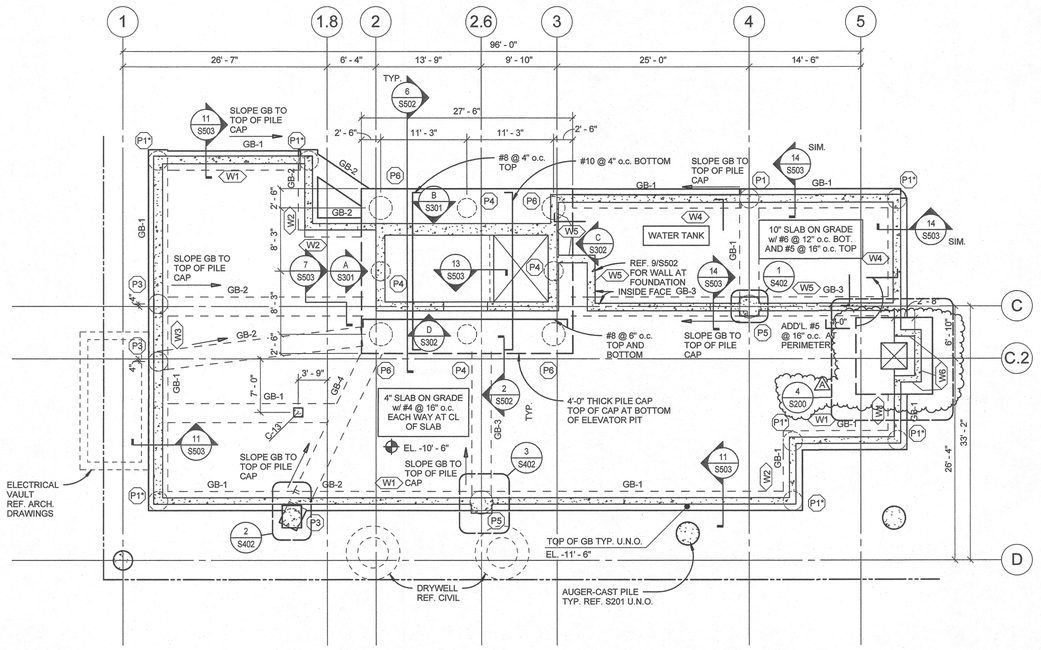

1 BASEMENT FOUNDATION PLAN
1/8" = 1'-0"

NOTES:

1. REF. S002 AND S003 FOR GENERAL STRUCTURAL NOTES.
2. (PX) INDICATES AUGER-CAST PILE. REF. SHEET S501 AND S502 FOR DETAILS.
3. CX INDICATES CONCRETE COLUMN REF S401 FOR COLUMN SCHEDULE.
4. WX INDICATES CONCRETE BASEMENT WALL REF. 3/S200 FOR SCHEDULE.
5. EL. XXX.XX' INDICATES TOP OF GRADE BEAM ELEVATION.
6. EL. XXX'-XX" INDICATES TOP OF SLAB ELEVATION. EL. 0'-0" INDICATES 125.83' CITY OF PORTLAND VERTICAL DATUM.
7. INDICATES PROPERTY LINE.
8. GB-X INDICATES GRADE BEAM REF. 2/S200 FOR SCHEDULE AND SHEET S502 FOR DETAILS.
9. REF. SHEETS S301 THROUGH S305 FOR SHEAR WALL ELEVATION AND DETAILS.
10. REF. SHEETS S401 AND S402 FOR CONCRETE COLUMN SCHEDULE AND DETAILS.
11. REF. SHEETS S501 AND S502 FOR FOUNDATION DETAILS.
12. REF. SHEETS S503 AND S504 FOR TYPICAL CONCRETE DETAILS.
13. INDICATES CMU WALL. REF. PLAN FOR THICKNESS.
14. INDICATES CONCRETE WALL.

GRADE BEAM SCHEDULE

MARK	WIDTH	DEPTH	LONGITUDINAL REINFORCING	STIRRUPS
GB-1	2'-6"	2'-0"	(3) #8 TOP (3) #8 BOTTOM	#4 T2 @ 12" o.c.
GB-2	2'-6"	2'-0"	(4) #8 TOP (4) #8 BOTTOM	#4 T2 @ 12" o.c.
GB-3	2'-6"	2'-0"	(4) #9 TOP (5) #9 BOTTOM	#4 T2 @ 12" o.c.
GB-4	2'-6"	3'-0"	(4) #9 TOP (4) #9 BOTTOM	#4 T2 @ 12" o.c.

NOTE:
REF. SHEET S502 FOR GRADE BEAM DETAILS.

2 GRADE BEAM SCHEDULE
1" = 1'-0"

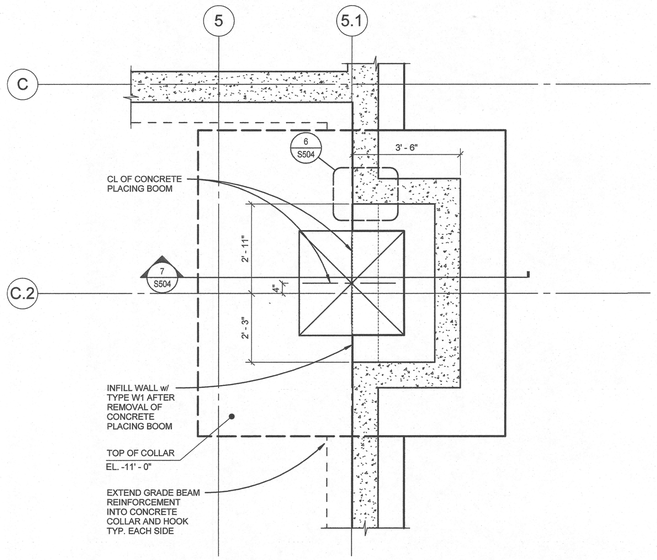

NOTE:
PROVIDE WALL DOWELS IN TOP OF COLLAR FOR WALL INFILL
OMIT DOWELS WHICH CONFLICT WITH STEEL SHAFT.

4 PARTIAL PLAN AT PLACING BOOM
1/2" = 1'-0"

BASEMENT WALL SCHEDULE

MARK	THICKNESS	VERT. REINF.	HORIZ. REINF.
W1	10	#5 @ 10" o.c. I.F. #5 @ 16" o.c. O.F.	#4 @ 16" o.c. EACH FACE
W2	10	#5 @ 16" o.c. EACH FACE	#4 @ 8" o.c. I.F. #4 @ 16" o.c. O.F.
W3	14	#5 @ 12" o.c. I.F. #5 @ 10" o.c. O.F.	#4 @ 16" o.c. EACH FACE
W4	12	#4 @ 8" o.c. I.F. #5 @ 16" o.c. O.F.	#4 @ 8" o.c. I.F. #4 @ 16" o.c. O.F.
W5	12	#4 @ 8" o.c. I.F. #5 @ 12" o.c. O.F.	#4 @ 8" o.c. I.F. #4 @ 16" o.c. O.F.
W6	10	#4 @ 16" o.c. EACH FACE	#4 @ 16" o.c. EACH FACE

NOTE:
I.F. INDICATES INSIDE FACE OF WALL
O.F. INDICATES OUTSIDE FACE OF WALL

3 BASEMENT WALL SCHEDULE
1" = 1'-0"

LRS ARCHITECTS
720 NW Davis 503.221.1121
Suite 300 503.221.2077
Portland OR 97209 www.lrsarchitects.com

STRUCTURAL REGISTERED PROFESSIONAL ENGINEER 79478PE OREGON DEC. 13, 2005 JOSHUA P. RICHARDS EXPIRES 12-31-18

LEVERARCHITECTURE
4713 N ALBINA AVE, PDX OR 97217
T 503 928 6040
www.leverarchitecture.com

CONSULTANT:

kpff
111 SW Fifth Ave., Suite 2500
Portland, OR 97204
O: 503.227.3251
F: 503.227.7980
www.kpff.com

PROJECT NUMBER: 1600385-R17

GRAND AVENUE APARTMENTS

1010 NE GRAND AVE. PORTLAND, OR 97232

SHEET TITLE:
BASEMENT FOUNDATION PLAN

DRAWN BY: BJS
DATE CREATED: 08-10-2017

A	Plan Check Review	09.01.2017

City of Portland REVIEWED FOR CODE COMPLIANCE DEC 22 2017 Permit Number:

RECEIVED SEP 06 2017 BDS DOCUMENT SERVICES

SHEET:
S200
ADDENDUM #1
08-10-2017

LRS Architects, Inc. ©2017

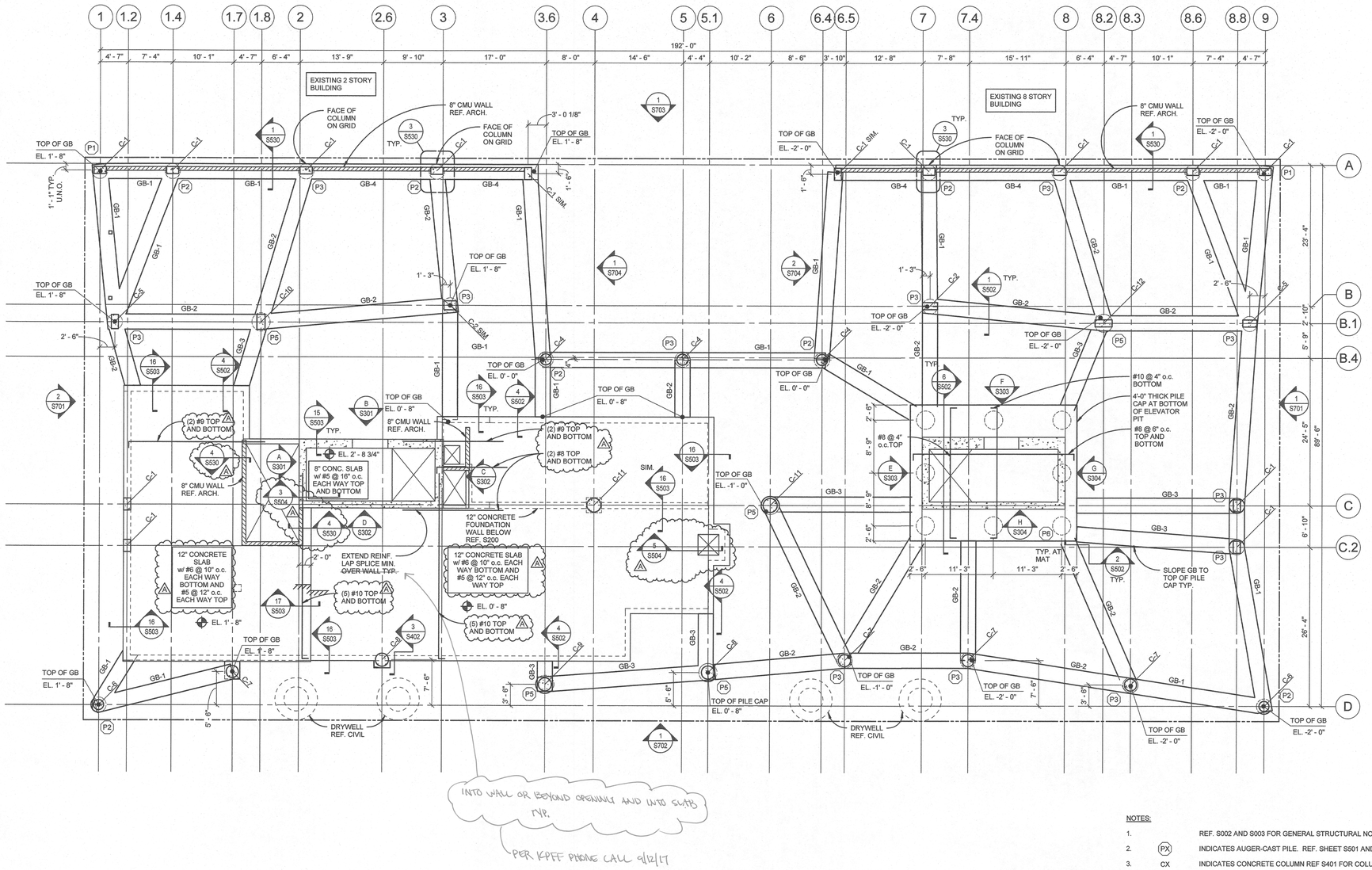

INTO WALL OR BEYOND OPENING AND INTO SLAB TYP.

PER KPFF PIPING CALL 9/12/17

1 FIRST FLOOR PLAN

1/8" = 1'-0"

NOTES:

1. REF. S002 AND S003 FOR GENERAL STRUCTURAL NOTES.
2. (PX) INDICATES AUGER-CAST PILE. REF. SHEET S501 AND S502 FOR DETAILS.
3. CX INDICATES CONCRETE COLUMN REF S401 FOR COLUMN SCHEDULE.
4. WX INDICATES CONCRETE BASEMENT WALL REF. 3/S200 FOR SCHEDULE.
5. EL. XXX.XX' INDICATES TOP OF GRADE BEAM ELEVATION.
6. EL. XXX'-XX" INDICATES TOP OF SLAB ELEVATION. EL. 0'-0" INDICATES 125.83' CITY OF PORTLAND VERTICAL DATUM.
7. INDICATES PROPERTY LINE.
8. GB-X INDICATES GRADE BEAM REF. 2/S200 FOR SCHEDULE AND SHEET S502 FOR DETAILS.
9. REF. SHEETS S301 THROUGH S305 FOR SHEAR WALL ELEVATION AND DETAILS.
10. REF. SHEETS S401 AND S402 FOR CONCRETE COLUMN SCHEDULE AND DETAILS.
11. REF. SHEETS S501 AND S502 FOR FOUNDATION DETAILS.
12. REF. SHEETS S503 AND S504 FOR TYPICAL CONCRETE DETAILS.
13. REF. SHEETS S530 FOR MASONRY DETAILS.
14. REF. S701 THROUGH S705 FOR EXTERIOR FACADE FRAMING DETAILS.
15. INDICATES CMU WALL. REF. PLAN FOR THICKNESS.
16. INDICATES CONCRETE WALL.

LRS ARCHITECTS
720 NW Davis 503.221.1121
Suite 300 503.221.2077
Portland OR 97209 www.lrsarchitects.com

REGISTERED PROFESSIONAL ENGINEER
79476PE
OREGON
JOSHUA P. RICHARDS
EXPIRES 12-31-18

LEVERARCHITECTURE
4713 N ALBINA AVE, PDX OR 97217
T 503 928 6040
www.leverarchitecture.com

CONSULTANT:

kpff
111 SW Fifth Ave., Suite 2500
Portland, OR 97204
O: 503.227.3251
F: 503.227.7980
www.kpff.com

PROJECT NUMBER: 1600385-R17

GRAND AVENUE APARTMENTS

1010 NE GRAND AVE. PORTLAND, OR 97232

SHEET TITLE:
FIRST FLOOR FOUNDATION PLAN

DRAWN BY: BJS
DATE CREATED: 08-10-2017

A	Plan Check Review	09.01.2017

City of Portland REVIEWED FOR CODE COMPLIANCE
DEC 22 2017
Permit Number

SHEET:
S201
ADDENDUM #1
08-10-2017

LRS Architects, Inc. ©2017

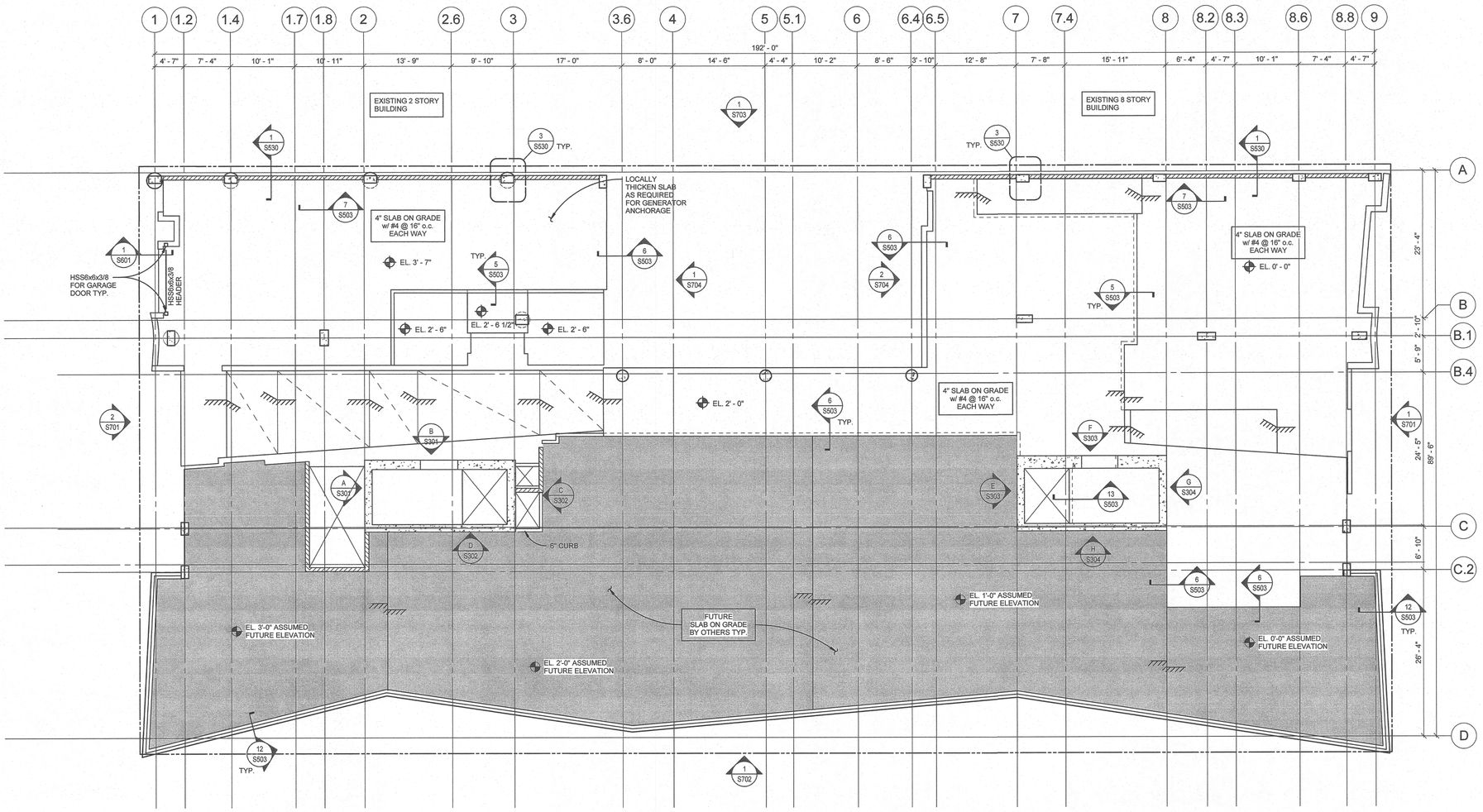

NOTES:

1. REF. ARCH. DRAWINGS FOR ALL DIMENSIONS.
2. REF. ARCH. FOR CURBS.
3. REF. 1/S504 FOR TYPICAL CURB REINFORCING.

1 FIRST FLOOR SLAB PLAN

1/8" = 1'-0"

LRS ARCHITECTS
720 NW Davis 503.221.1121
Suite 300 503.221.2077
Portland OR 97209 www.lrsarchitects.com

STRUCTURAL REGISTERED PROFESSIONAL ENGINEER 79476PE OREGON DEC. 13, 1985 JOSHUA P. RICHARDS
EXPIRES 12-31-18

LEVERARCHITECTURE
4713 N ALBINA AVE, PDX OR 97217
T 503 928 6040
www.leverarchitecture.com

CONSULTANT:

kpff
111 SW Fifth Ave., Suite 2500
Portland, OR 97204
O: 503.227.3251
F: 503.227.7980
www.kpff.com

PROJECT NUMBER: 1600385-R17

GRAND AVENUE APARTMENTS

1010 NE GRAND AVE. PORTLAND, OR 97232

SHEET TITLE:
FIRST FLOOR SLAB PLAN

DRAWN BY: BJS
DATE CREATED: 07-14-2017

City of Portland
REVIEWED FOR CODE COMPLIANCE
DEC 22 2017
Permit Number

SHEET:
S201A
PERMIT SET
07-14-2017

LRS Architects, Inc. ©2017

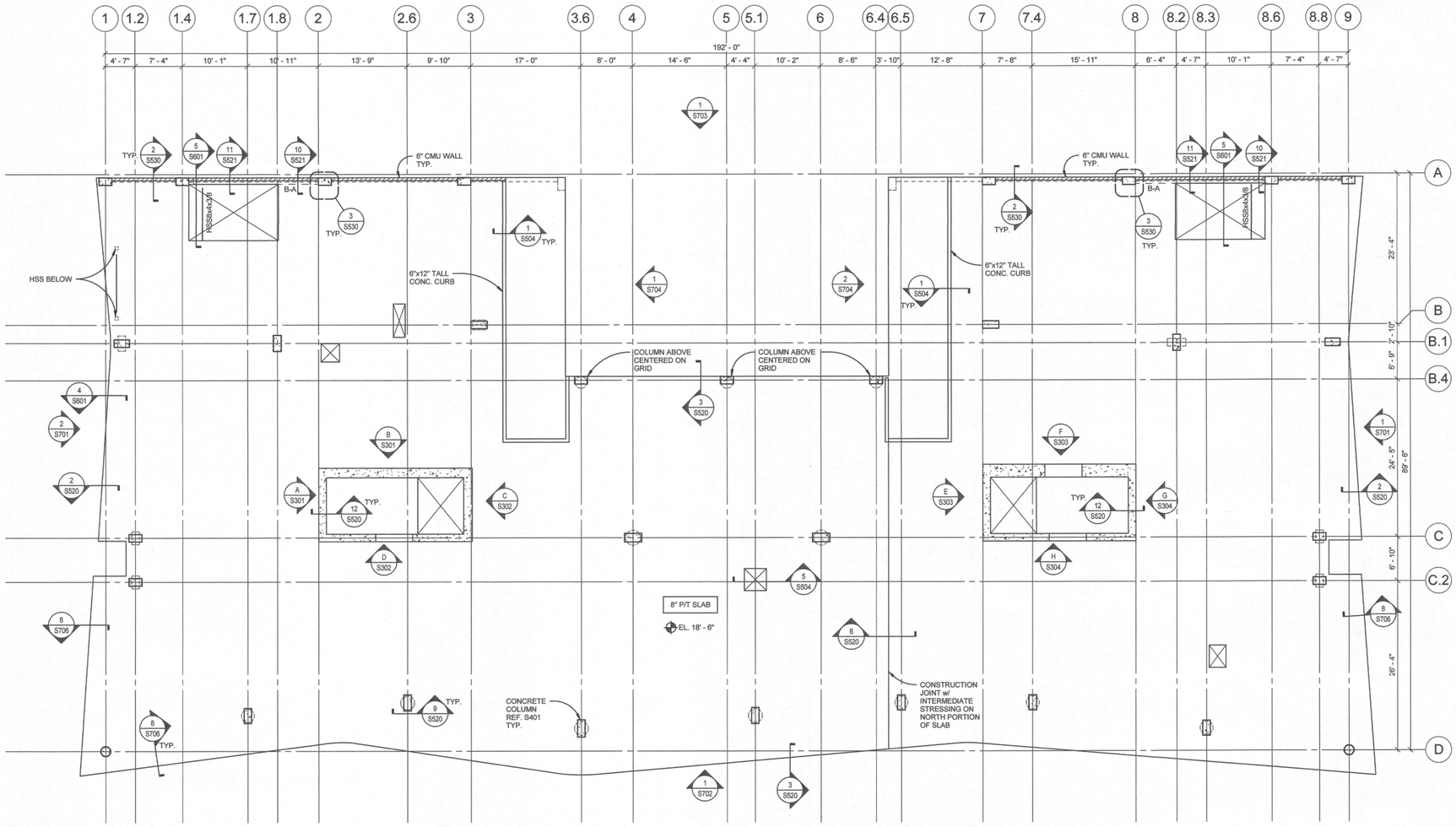

NOTES:

1. REF. S002 THROUGH S004 FOR GENERAL STRUCTURAL NOTES.
2. EL. XXX'-XX" INDICATES TOP OF SLAB ELEVATION.
3. INDICATES CMU WALL. REF. ARCH. FOR DIMENSIONS AND GENERAL STRUCTURAL NOTES FOR REINFORCING.
4. INDICATES CONCRETE WALL. REF. ELEVATIONS FOR SIZE AND REINFORCING.
5. REF. SHEETS S301 THROUGH S305 FOR SHEAR WALL ELEVATION AND DETAILS.
6. REF. SHEETS S401 AND S402 FOR CONCRETE COLUMN SCHEDULE AND DETAILS.
7. REF. SHEETS S501 AND S502 FOR FOUNDATION DETAILS.
8. REF. SHEETS S503 AND S504 FOR TYPICAL CONCRETE DETAILS.
9. REF. SHEETS S520 AND S521 FOR POST-TENSIONING DETAILS.
10. REF. SHEETS S530 FOR MASONRY DETAILS.
11. REF. S701 THROUGH S705 FOR EXTERIOR FACADE FRAMING DETAILS.
12. REF. ARCHITECTURAL, MECHANICAL AND ELECTRICAL DRAWINGS FOR SLEEVES BLOCKOUTS, AND OTHER ITEMS TO BE COORDINATED WITH THE STRUCTURAL DRAWINGS.
13. COORDINATE LOCATION OF ELEVATOR GUIDERAIL SUPPORTS WITH THE MANUFACTURER.
14. SURVEY SLAB FOR PT TENDON AND MILD REINFORCING LOCATIONS PRIOR TO DRILLING ANY POST-INSTALLED ANCHOR OVER 3/4" EMBEDMENT.
15. B-X INDICATES BEAM TYPE REF. S521 FOR BEAM SCHEDULE AND TYPICAL DETAILS.
16. COLUMNS ALIGN w/ CENTER OF COLUMN AT LEVEL BELOW U.N.O. REF. S401 FOR COLUMN SCHEDULE.
17. REF. ARCH. SLAB PLANS FOR SLAB EDGE AND OPENING DIMENSIONS.
18. REF. REINFORCING PLAN AND POST TENSION PLAN FOR ADDITIONAL INFORMATION.
19. INDICATES 4" HOUSEKEEPING PAD REF. 2/S504.

1 SECOND FLOOR PLAN

1/8" = 1'-0"

LRS ARCHITECTS
720 NW Davis 503.221.1121
Suite 300 503.221.2077
Portland OR 97209 www.lrsarchitects.com

STRUCTURAL REGISTERED PROFESSIONAL ENGINEER 79475PE OREGON JOSHUA P. RICHARDS
EXPIRES 12-31-18

LEVERARCHITECTURE
4713 N ALBINA AVE, PDX OR 97217
T 503 928 6040
www.leverarchitecture.com

CONSULTANT:

kpff
111 SW Fifth Ave., Suite 2500
Portland, OR 97204
O: 503.227.3251
F: 503.227.7980
www.kpff.com

PROJECT NUMBER: 1600385-R17

GRAND AVENUE APARTMENTS

1010 NE GRAND AVE. PORTLAND, OR 97232

SHEET TITLE:
SECOND FLOOR PLAN

DRAWN BY: BJS
DATE CREATED: 08-10-2017

A	Plan Check Review	09.01.2017

City of Portland REVIEWED FOR CODE COMPLIANCE DEC 22 2017 Permit Number

RECEIVED SEP 06 2017 BDS DOCUMENT SERVICES

SHEET: S202
ADDENDUM #1 09-15-2017

LRS Architects, Inc. ©2017

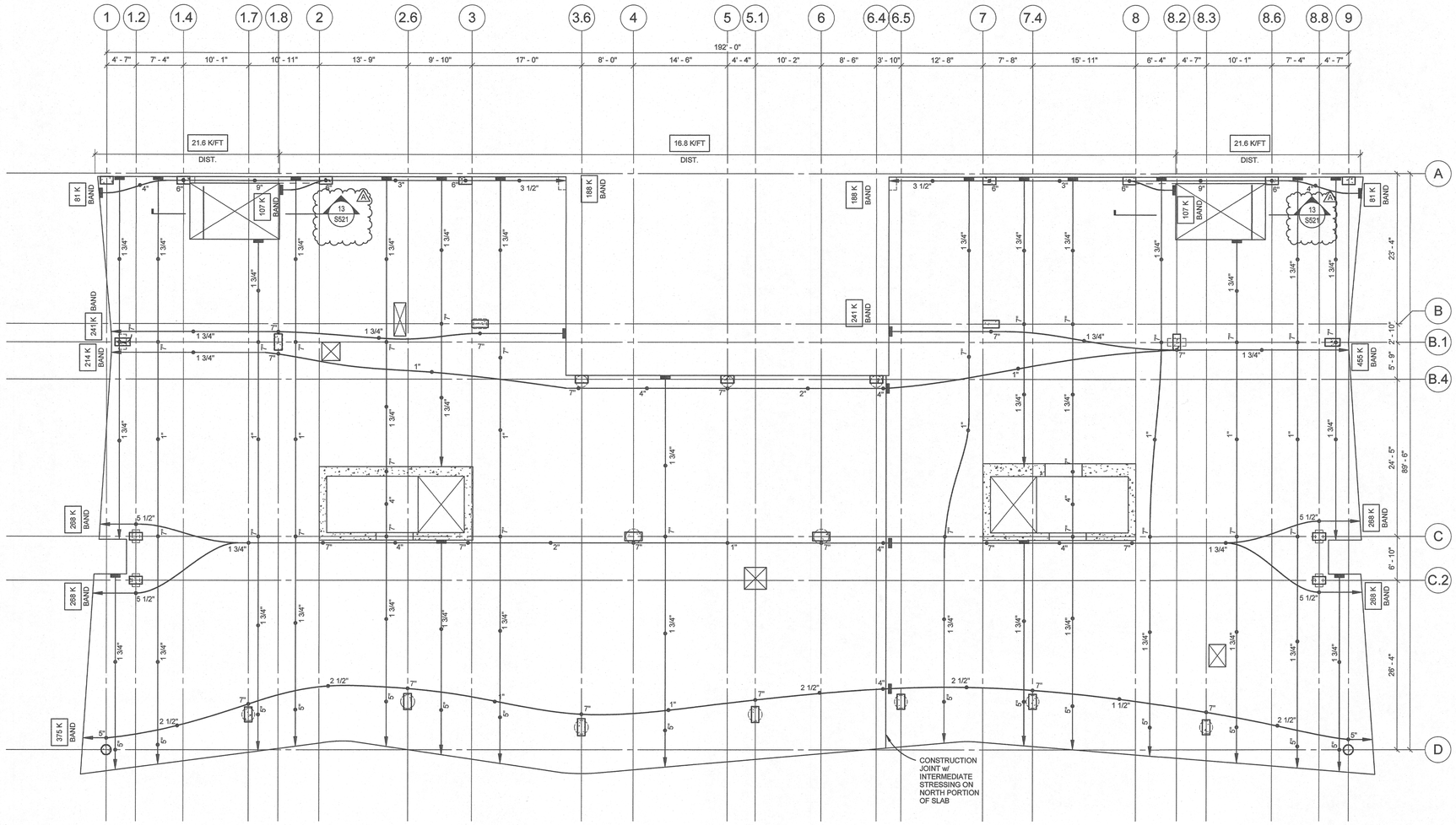

1 SECOND FLOOR POST-TENSIONING PLAN

1/8" = 1'-0"

POST TENSIONING PLAN NOTES:

1. REF. SHEET S002 AND S003 FOR GENERAL STRUCTURAL NOTES.
2. REF. SHEETS S520 AND S521 FOR TYPICAL POST TENSION DETAILS.
3. REF. SLAB PLAN FOR ADDITIONAL INFORMATION.
4. INDICATES POST TENSIONED DEAD END.
5. INDICATES POST TENSIONED STRESSING END.
6. X" — INDICATES DISTANCE FROM BOTTOM OF SLAB TO CENTER OF GRAVITY OF POST TENSIONED TENDONS.
7. INDICATES INTERMEDIATE STRESSING ANCHORAGE LOCATE AT CENTER OF GRAVITY OF SLAB.
8. REF. MECH. AND ELECT. DRAWINGS FOR PIPE AND CONDUIT LOCATIONS. NOTIFY EOR OF ANY OPENINGS NOT CONFORMING TO TYPICAL DETAILS.
9. XXX K — INDICATES EFFECTIVE FORCE FOR CONTINUOUS BANDED POST TENSIONED TENDONS (KIPS).
10. XXX K/FT — INDICATES EFFECTIVE FORCE FOR DISTRIBUTED BANDED POST TENSIONED TENDONS (KIPS/FT.).
11. X"-B — INDICATES DISTANCE FROM BOTTOM OF BEAM TO CENTER OF GRAVITY OF POST TENSIONED TENDONS.

LRS ARCHITECTS
720 NW Davis 503.221.1121
Suite 300 503.221.2077
Portland OR 97209 www.lrsarchitects.com

STRUCTURAL REGISTERED PROFESSIONAL ENGINEER 19476PE OREGON JULY 13, 2001 JOSHUA P. RICHARDS
EXPIRES 12-31-18

LEVERARCHITECTURE
4713 N ALBINA AVE, PDX OR 97217
T 503 928 6040
www.leverarchitecture.com

CONSULTANT:

kpff
111 SW Fifth Ave., Suite 2500
Portland, OR 97204
O: 503.227.3251
F: 503.227.7980
www.kpff.com

PROJECT NUMBER: 1600385-R17

GRAND AVENUE APARTMENTS

1010 NE GRAND AVE. PORTLAND, OR 97232

SHEET TITLE:
SECOND FLOOR POST-TENSIONING PLAN

DRAWN BY: BJS
DATE CREATED: 08-10-2017

A	Plan Check Review	09.01.2017

City of Portland REVIEWED FOR CODE COMPLIANCE DEC 22 2017 Permit Set

RECEIVED SEP 06 2017 BDS DOCUMENT SERVICES

SHEET:
S202P
ADDENDUM #1
08-10-2017

LRS Architects, Inc. ©2017

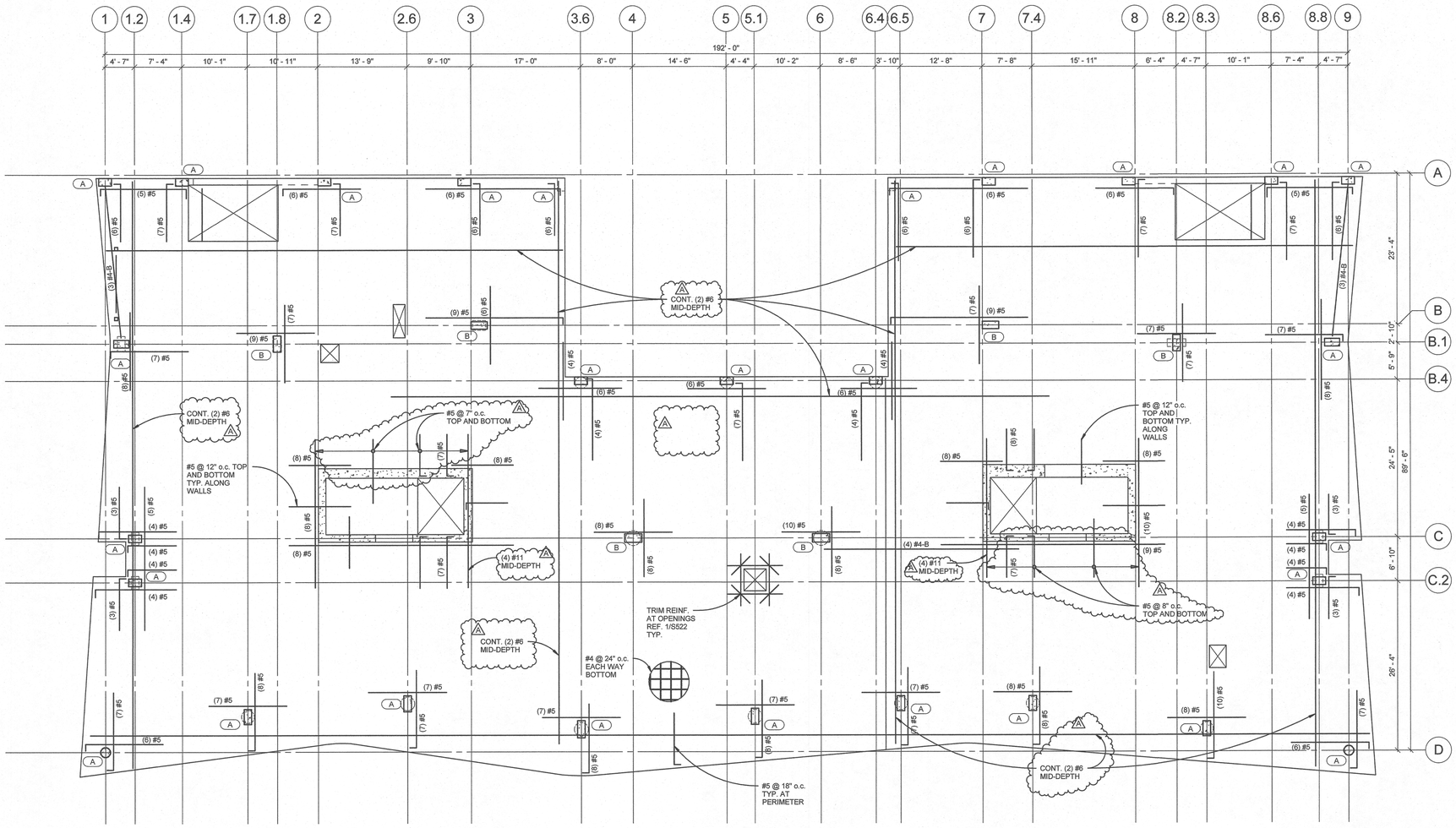

1 SECOND FLOOR REINFORCING PLAN

1/8" = 1'-0"

REINFORCING PLAN NOTES:

1. REF. SHEETS S002 AND S003 FOR GENERAL STRUCTURAL NOTES.
2. REF. SHEETS S520 THRU S523 FOR TYPICAL CONCRETE DETAILS.
3. REF. MEP DRAWINGS FOR PIPE AND CONDUIT. NOTIFY EOR OF ANY OPENINGS NOT CONFORMING TO TYPICAL DETAILS.
4. REF. S401 FOR COLUMN SCHEDULE.
5. (X) #X — INDICATES NUMBER OF REINFORCING. PLACED AT TOP OF SLAB U.N.O. REF. DETAIL 1/S521 AT COLUMNS.
6. (X)#X-B — INDICATES NUMBER OF ADDITIONAL REINFORCING PLACED AT BOTTOM OF SLAB DISTRIBUTE PER 1/S521.
7. ALL TOP REINF. MUST EXTEND 1/3 SPAN BEYOND SUPPORT U.N.O.
8. (X) — INDICATES STUD RAIL TYPE WHERE REQUIRED AT COLUMNS REF. S522 FOR DETAILS.
9. REF. 9/S521 FOR ADDITIONAL REINF. AT CONCRETE WALLS.
10. REF. 5/S521 THRU 7/S521 FOR TYP. REINF. AT SLAB CORNERS.
11. REF. 2/S520 AND 3/S520 FOR REINF. AT TENDON ANCHORAGE.
12. REF. SLAB PLAN FOR ADDITIONAL INFORMATION AND DETAIL REFERENCES.

LRS ARCHITECTS
720 NW Davis 503.221.1121
Suite 300 503.221.2077
Portland OR 97209 www.lrsarchitects.com

STRUCTURAL REGISTERED PROFESSIONAL ENGINEER 79476PE OREGON JOSHUA P. RICHARDS
EXPIRES 12-31-18

LEVERARCHITECTURE
4713 N ALBINA AVE, PDX OR 97217
T 503 928 6040
www.leverarchitecture.com

CONSULTANT:

kpff
111 SW Fifth Ave., Suite 2500
Portland, OR 97204
O: 503.227.3251
F: 503.227.7980
www.kpff.com

PROJECT NUMBER: *1600385-R17*

GRAND AVENUE APARTMENTS

1010 NE GRAND AVE. PORTLAND, OR 97232

SHEET TITLE:
SECOND FLOOR REINFORCING PLAN

DRAWN BY: *BJS*
DATE CREATED: *08-10-2017*

A	Plan Check Review	09.01.2017

City of Portland REVIEWED FOR CODE COMPLIANCE DEC 22 2017 Permit Number
RECEIVED SEP 06 2017 BDS DOCUMENT SERVICES

SHEET:
S202R
ADDENDUM #1
08-10-2017

LRS Architects, Inc. ©2017

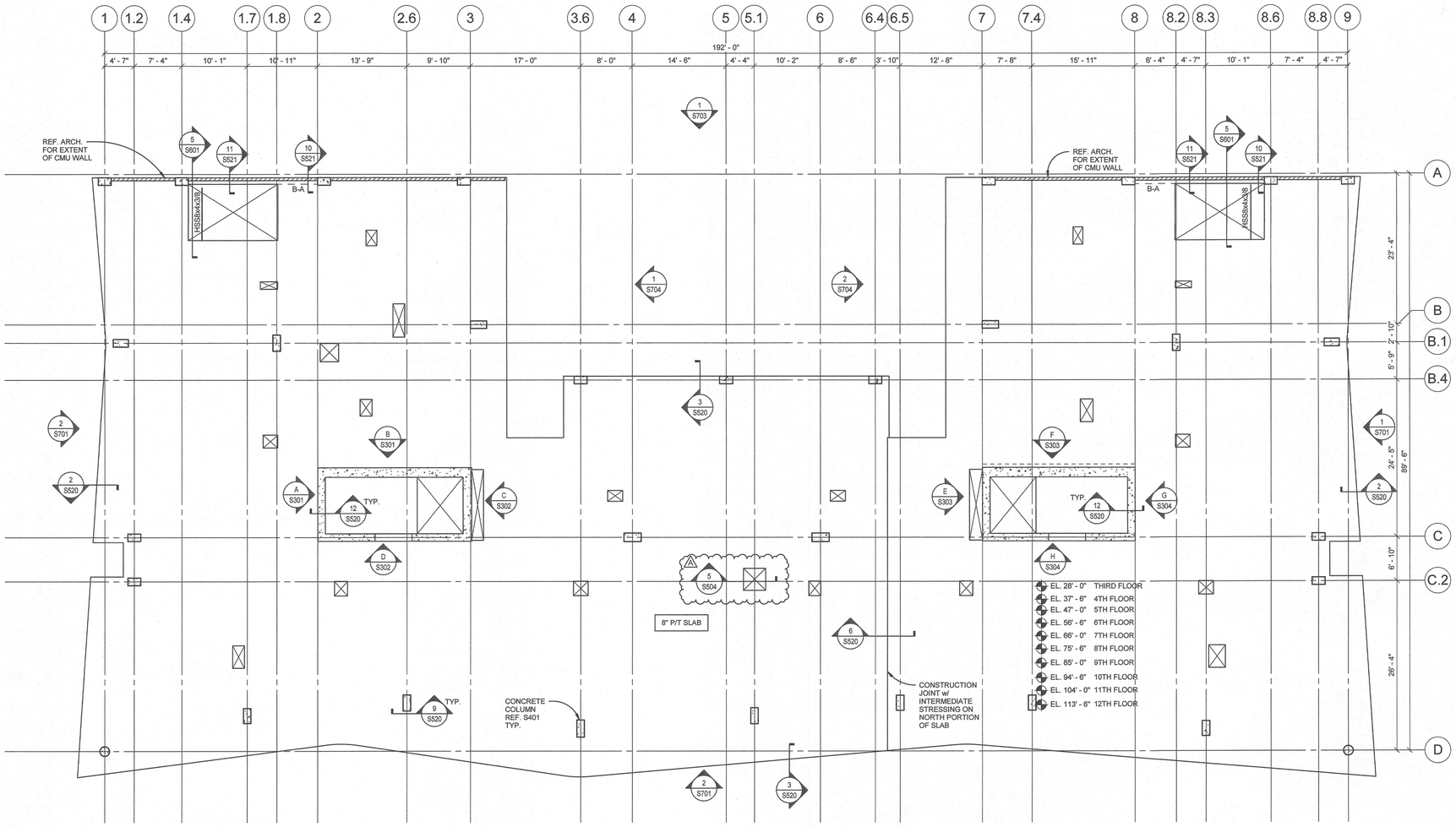

1 THIRD - TWELFTH FLOOR PLANS
1/8" = 1'-0"

NOTES:

1. REF. S002 THROUGH S004 FOR GENERAL STRUCTURAL NOTES.
2. EL. XXX'-XX" INDICATES TOP OF SLAB ELEVATION.
3. INDICATES CMU WALL. REF. ARCH. FOR DIMENSIONS AND GENERAL STRUCTURAL NOTES FOR REINFORCING.
4. INDICATES CONCRETE WALL. REF. ELEVATIONS FOR SIZE AND REINFORCING.
5. REF. SHEETS S301 THROUGH S305 FOR SHEAR WALL ELEVATION AND DETAILS.
6. REF. SHEETS S401 AND S402 FOR CONCRETE COLUMN SCHEDULE AND DETAILS.
7. REF. SHEETS S501 AND S502 FOR FOUNDATION DETAILS.
8. REF. SHEETS S503 AND S504 FOR TYPICAL CONCRETE DETAILS.
9. REF. SHEETS S520 AND S521 FOR POST-TENSIONING DETAILS.
10. REF. SHEETS S530 FOR MASONRY DETAILS.
11. REF. S701 THROUGH S705 FOR EXTERIOR FACADE FRAMING DETAILS.
12. REF. ARCHITECTURAL, MECHANICAL AND ELECTRICAL DRAWINGS FOR SLEEVES BLOCKOUTS, AND OTHER ITEMS TO BE COORDINATED WITH THE STRUCTURAL DRAWINGS.
13. COORDINATE LOCATION OF ELEVATOR GUIDERAIL SUPPORTS WITH THE MANUFACTURER.
14. SURVEY SLAB FOR PT TENDON AND MILD REINFORCING LOCATIONS PRIOR TO DRILLING ANY POST-INSTALLED ANCHOR OVER 3/4" EMBEDMENT.
15. B-X INDICATES BEAM TYPE REF. S521 FOR BEAM SCHEDULE AND TYPICAL DETAILS.
16. COLUMNS ALIGN w/ CENTER OF COLUMN AT LEVEL BELOW U.N.O. REF. S401 FOR COLUMN SCHEDULE.
17. REF. ARCH. SLAB PLANS FOR SLAB EDGE AND OPENING DIMENSIONS.
18. REF. REINFORCING PLAN AND POST TENSION PLAN FOR ADDITIONAL INFORMATION.
19. INDICATES 4" HOUSEKEEPING PAD REF. 2/S504.

LRS ARCHITECTS
720 NW Davis 503.221.1121
Suite 300 503.221.2077
Portland OR 97209 www.lrsarchitects.com

STRUCTURAL ENGINEER REGISTERED PROFESSIONAL OREGON JOSHUA P. RITCHARDS
EXPIRES 12-31-18

LEVERARCHITECTURE
4713 N ALBINA AVE, PDX OR 97217
T 503 928 6040
www.leverarchitecture.com

CONSULTANT:

kpff
111 SW Fifth Ave., Suite 2500
Portland, OR 97204
O: 503.227.3251
F: 503.227.7980
www.kpff.com

PROJECT NUMBER: 1600385-R17

GRAND AVENUE APARTMENTS

1010 NE GRAND AVE. PORTLAND, OR 97232

SHEET TITLE:
THIRD - TWELFTH FLOOR PLAN

DRAWN BY: BJS
DATE CREATED: 08-10-2017

A	Plan Check Review	09.01.2017

City of Portland REVIEWED FOR CODE COMPLIANCE DEC 22 2017 Permit Number

RECEIVED SEP 06 2017 BLDS DOCUMENT SERVICES

SHEET:
S203
ADDENDUM #1
08-10-2017

LRS Architects, Inc. ©2017

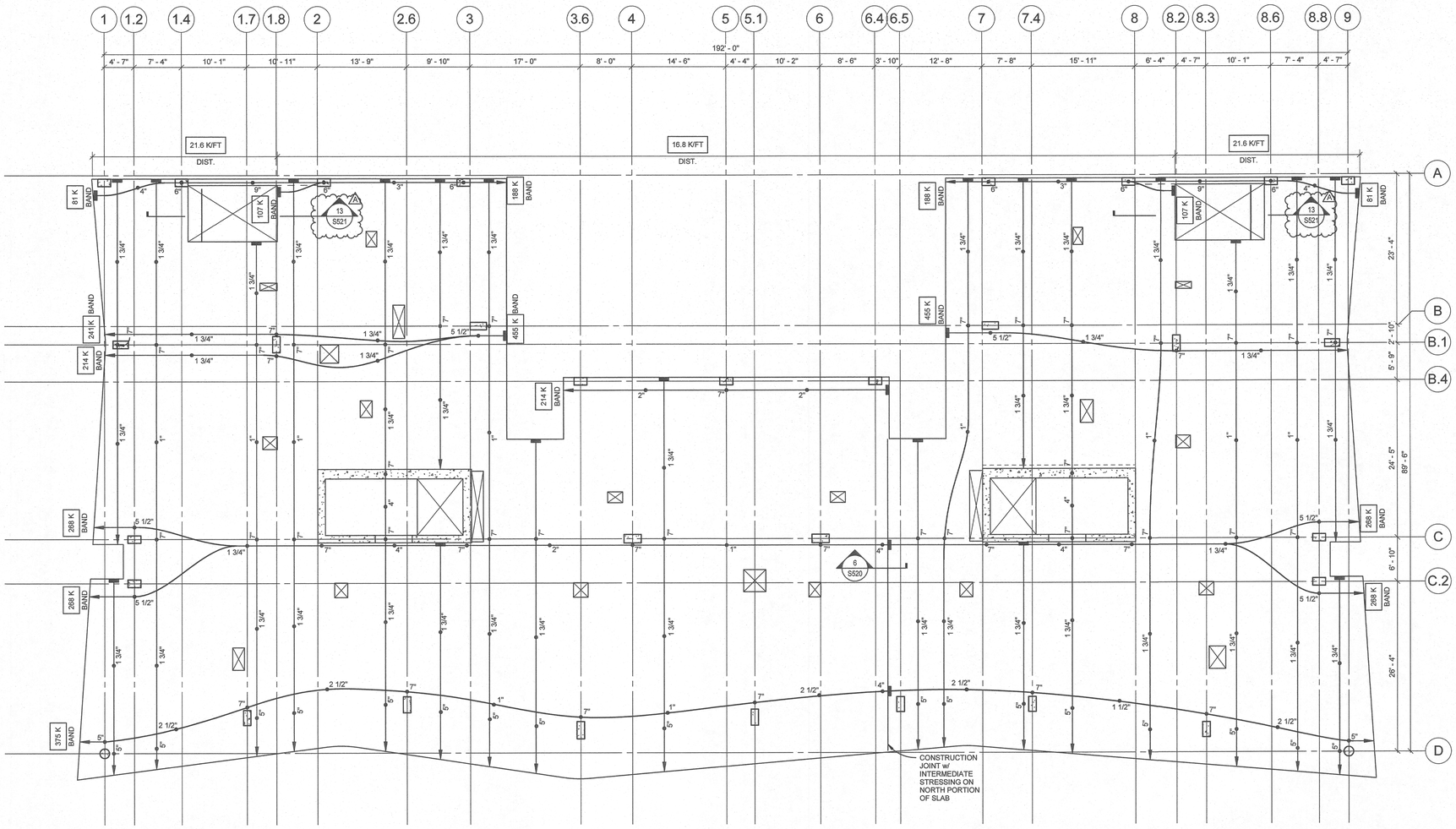

1 THIRD - TWELFTH FLOOR POST-TENSIONING PLAN

1/8" = 1'-0"

POST TENSIONING PLAN NOTES:

1. REF. SHEET S002 AND S003 FOR GENERAL STRUCTURAL NOTES.
2. REF. SHEETS S520 AND S521 FOR TYPICAL POST TENSION DETAILS.
3. REF. SLAB PLAN FOR ADDITIONAL INFORMATION.
4. INDICATES POST TENSIONED DEAD END.
5. INDICATES POST TENSIONED STRESSING END.
6. X" — INDICATES DISTANCE FROM BOTTOM OF SLAB TO CENTER OF GRAVITY OF POST TENSIONED TENDONS.
7. INDICATES INTERMEDIATE STRESSING ANCHORAGE LOCATE AT CENTER OF GRAVITY OF SLAB.
8. REF. MECH. AND ELECT. DRAWINGS FOR PIPE AND CONDUIT LOCATIONS. NOTIFY EOR OF ANY OPENINGS NOT CONFORMING TO TYPICAL DETAILS.
9. XXX K — INDICATES EFFECTIVE FORCE FOR CONTINUOUS BANDED POST TENSIONED TENDONS (KIPS).
10. XXX K/FT — INDICATES EFFECTIVE FORCE FOR DISTRIBUTED BANDED POST TENSIONED TENDONS (KIPS/FT.).
11. X"-B — INDICATES DISTANCE FROM BOTTOM OF BEAM TO CENTER OF GRAVITY OF POST TENSIONED TENDONS.

LRS ARCHITECTS
720 NW Davis 503.221.1121
Suite 300 503.221.2077
Portland OR 97209 www.lrsarchitects.com

STRUCTURAL REGISTERED PROFESSIONAL ENGINEER 79476PE OREGON JOSHUA P. RICHARDS EXPIRES 12-31-18

LEVERARCHITECTURE
4713 N ALBINA AVE, PDX OR 97217
T 503 928 6040
www.leverarchitecture.com

CONSULTANT:

kpff
111 SW Fifth Ave., Suite 2500
Portland, OR 97204
O: 503.227.3251
F: 503.227.7980
www.kpff.com

PROJECT NUMBER: 1600385-R17

GRAND AVENUE APARTMENTS

1010 NE GRAND AVE. PORTLAND, OR 97232

SHEET TITLE:

THIRD -TWELFTH FLOOR POST-TENSIONING PLAN

DRAWN BY: BJS
DATE CREATED: 08-10-2017
A Plan Check Review 09.01.2017

City of Portland REVIEWED FOR CODE COMPLIANCE DEC 22 2017 Permit Number

RECEIVED SEP 06 2017 BDS DOCUMENT SERVICES

SHEET: **S203P**

ADDENDUM #1 08-10-2017

LRS Architects, Inc. ©2017

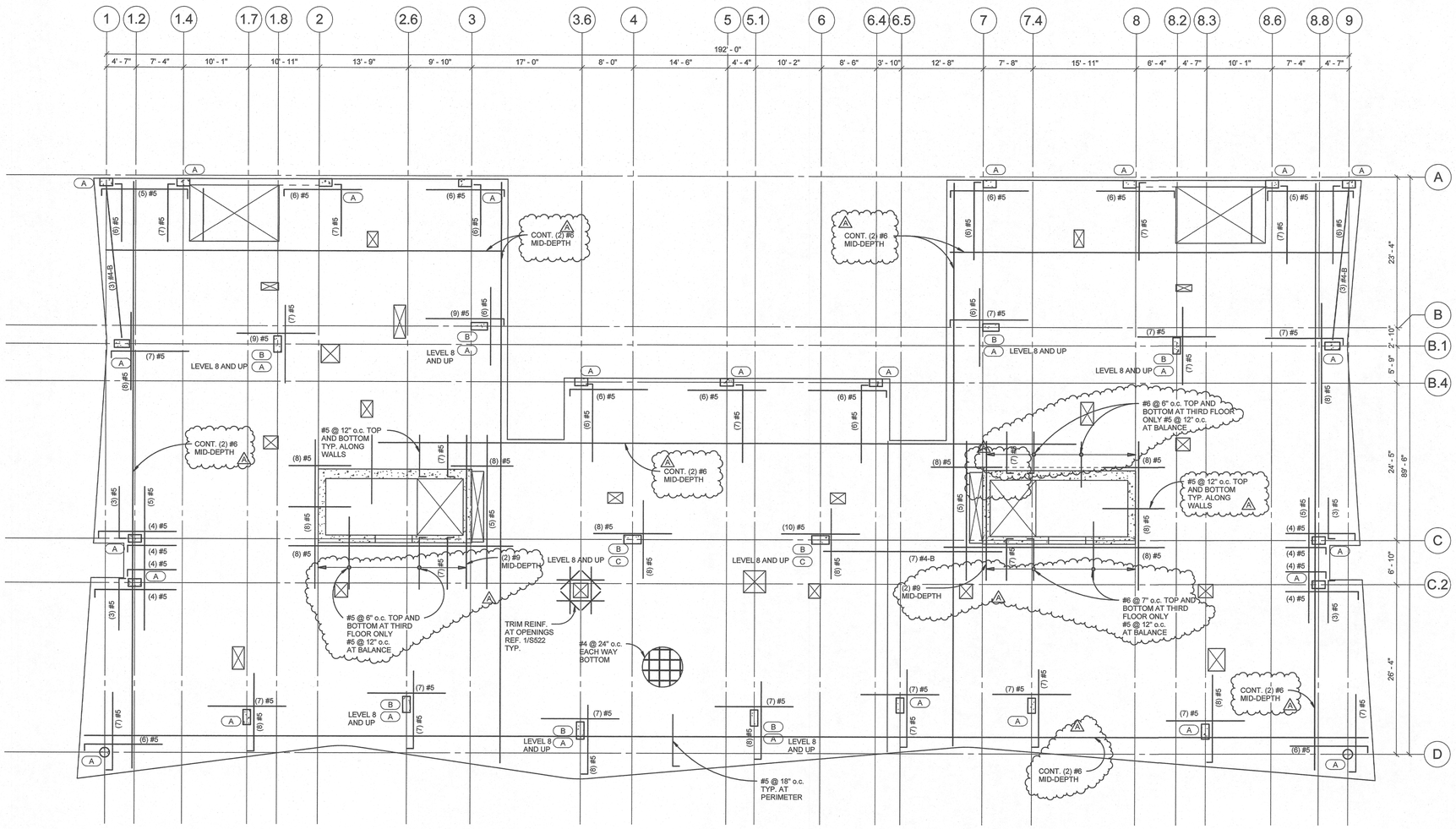

1 THIRD - TWELFTH FLOOR REINFORCING PLAN
1/8" = 1'-0"

REINFORCING PLAN NOTES:

1. REF. SHEETS S002 AND S003 FOR GENERAL STRUCTURAL NOTES.
2. REF. SHEETS S520 THRU S523 FOR TYPICAL CONCRETE DETAILS.
3. REF. MEP DRAWINGS FOR PIPE AND CONDUIT. NOTIFY EOR OF ANY OPENINGS NOT CONFORMING TO TYPICAL DETAILS.
4. REF. S401 FOR COLUMN SCHEDULE.
5. (X) #X — INDICATES NUMBER OF REINFORCING. PLACED AT TOP OF SLAB U.N.O. REF. DETAIL 1/S521 AT COLUMNS.
6. (X)#X-B — INDICATES NUMBER OF ADDITIONAL REINFORCING PLACED AT BOTTOM OF SLAB DISTRIBUTE PER 1/S521.
7. ALL TOP REINF. MUST EXTEND 1/3 SPAN BEYOND SUPPORT U.N.O.
8. (X) — INDICATES STUD RAIL TYPE WHERE REQUIRED AT COLUMNS REF. S522 FOR DETAILS.
9. REF. 9/S521 FOR ADDITIONAL REINF. AT CONCRETE WALLS.
10. REF. 5/S521 THRU 7/S521 FOR TYP. REINF. AT SLAB CORNERS.
11. REF. 2/S520 AND 3/S520 FOR REINF. AT TENDON ANCHORAGE.
12. REF. SLAB PLAN FOR ADDITIONAL INFORMATION AND DETAIL REFERENCES.

LRS ARCHITECTS
720 NW Davis 503.221.1121
Suite 300 503.221.2077
Portland OR 97209 www.lrsarchitects.com

STRUCTURAL REGISTERED PROFESSIONAL ENGINEER 79476PE OREGON JUNE 13, 2003 JOSHUA P. RICHARDS
EXPIRES 12-31-18

LEVERARCHITECTURE
4713 N ALBINA AVE, PDX OR 97217
T 503 928 6040
www.leverarchitecture.com

CONSULTANT:

kpff
111 SW Fifth Ave., Suite 2500
Portland, OR 97204
O: 503.227.3251
F: 503.227.7980
www.kpff.com

PROJECT NUMBER: 1600385-R17

GRAND AVENUE APARTMENTS

1010 NE GRAND AVE. PORTLAND, OR 97232

SHEET TITLE:
THIRD - TWELFTH FLOOR REINFORCING PLAN

DRAWN BY: BJS
DATE CREATED: 08-10-2017

A	Plan Check Review	09.01.2017

City of Portland REVIEWED FOR CODE COMPLIANCE DEC 22 2017 Permit Number

RECEIVED SEP 06 2017 BDS DOCUMENT SERVICES

SHEET:
S203R
ADDENDUM #1
08-10-2017

LRS Architects, Inc. ©2017

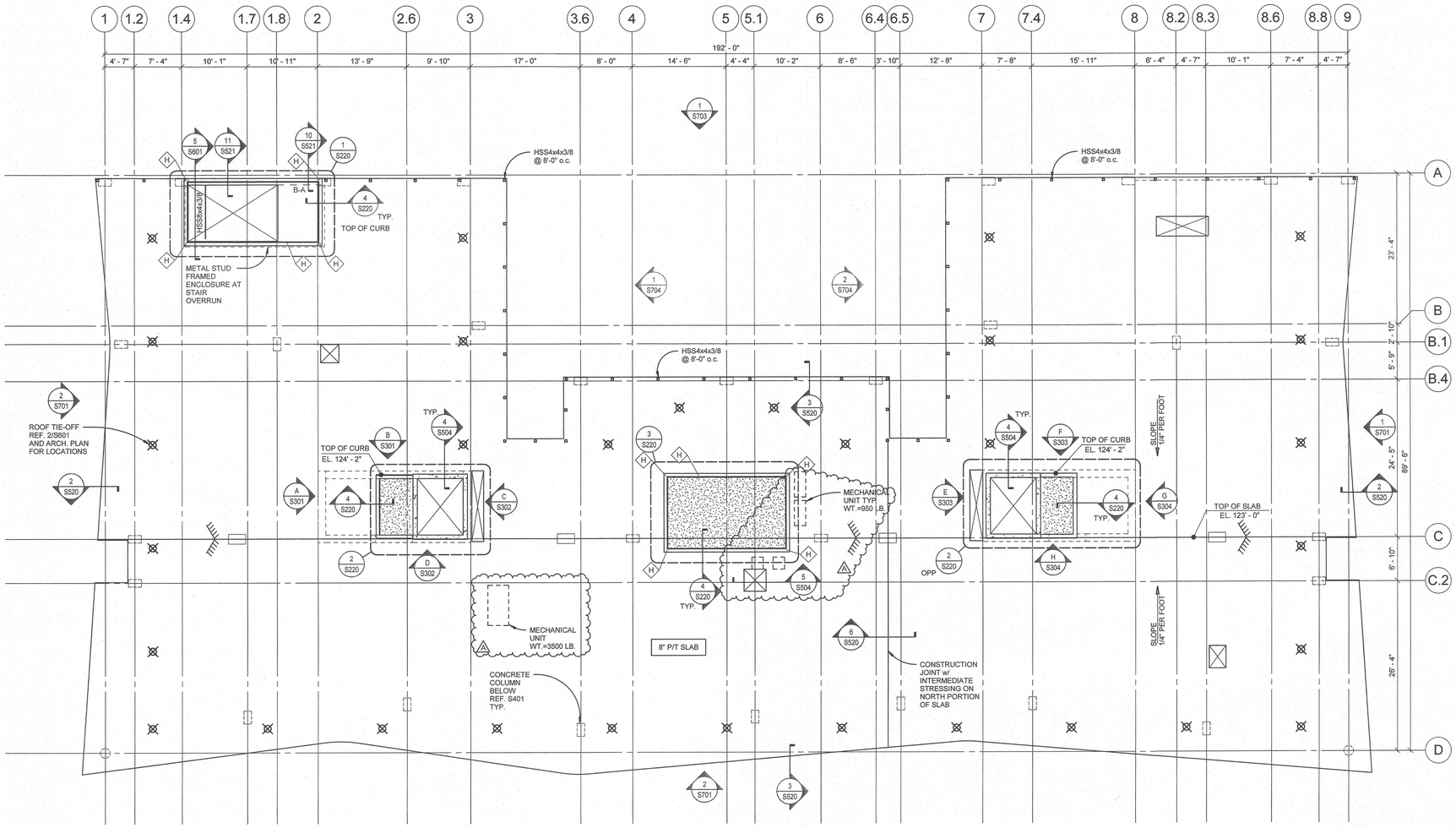

1 ROOF PLAN
1/8" = 1'-0"

NOTES:

1. REF. S002 THROUGH S004 FOR GENERAL STRUCTURAL NOTES.
2. EL. XXX'-XX" INDICATES TOP OF SLAB ELEVATION.
3. INDICATES CMU WALL. REF. ARCH. FOR DIMENSIONS AND GENERAL STRUCTURAL NOTES FOR REINFORCING.
4. INDICATES CONCRETE WALL. REF. ELEVATIONS FOR SIZE AND REINFORCING.
5. REF. SHEETS S301 THROUGH S305 FOR SHEAR WALL ELEVATION AND DETAILS.
6. REF. SHEETS S401 AND S402 FOR CONCRETE COLUMN SCHEDULE AND DETAILS.
7. REF. SHEETS S501 AND S502 FOR FOUNDATION DETAILS.
8. REF. SHEETS S503 AND S504 FOR TYPICAL CONCRETE DETAILS.
9. REF. SHEETS S520 AND S521 FOR POST-TENSIONING DETAILS.
10. REF. SHEETS S530 FOR MASONRY DETAILS.
11. REF. S701 THROUGH S705 FOR EXTERIOR FACADE FRAMING DETAILS.
12. REF. ARCHITECTURAL, MECHANICAL AND ELECTRICAL DRAWINGS FOR SLEEVES BLOCKOUTS, AND OTHER ITEMS TO BE COORDINATED WITH THE STRUCTURAL DRAWINGS.
13. COORDINATE LOCATION OF ELEVATOR GUIDERAIL SUPPORTS WITH THE MANUFACTURER.
14. SURVEY SLAB FOR PT TENDON AND MILD REINFORCING LOCATIONS PRIOR TO DRILLING ANY POST-INSTALLED ANCHOR OVER 3/4" EMBEDMENT.
15. B-X INDICATES BEAM TYPE REF. S521 FOR BEAM SCHEDULE AND TYPICAL DETAILS.
16. COLUMNS ALIGN w/ CENTER OF COLUMN AT LEVEL BELOW U.N.O. REF. S401 FOR COLUMN SCHEDULE.
17. REF. ARCH. SLAB PLANS FOR SLAB EDGE AND OPENING DIMENSIONS.
18. REF. REINFORCING PLAN AND POST TENSION PLAN FOR ADDITIONAL INFORMATION.
19. INDICATES 4" HOUSEKEEPING PAD REF. 2/S504.

LRS ARCHITECTS
720 NW Davis 503.221.1121
Suite 300 503.221.2077
Portland OR 97209 www.lrsarchitects.com

STRUCTURAL REGISTERED PROFESSIONAL ENGINEER 79472PE OREGON JOSHUA P. RICHARDS
EXPIRES 12-31-18

LEVERARCHITECTURE
4713 N ALBINA AVE, PDX OR 97217
T 503 928 6040
www.leverarchitecture.com

CONSULTANT:

kpff
111 SW Fifth Ave., Suite 2500
Portland, OR 97204
O: 503.227.3251
F: 503.227.7980
www.kpff.com

PROJECT NUMBER: *1600385-R17*

GRAND AVENUE APARTMENTS

1010 NE GRAND AVE. PORTLAND, OR 97232

SHEET TITLE:
ROOF PLAN

DRAWN BY: *BJS*
DATE CREATED: *08-10-2017*

A	Plan Check Review	09.01.2017

City of Portland REVIEWED FOR CODE COMPLIANCE DEC 22 2017 Permit Number:

RECEIVED SEP 06 2017 BDS DOCUMENT SERVICES

SHEET:
S213
ADDENDUM #1
08-10-2017

LRS Architects, Inc. ©2017

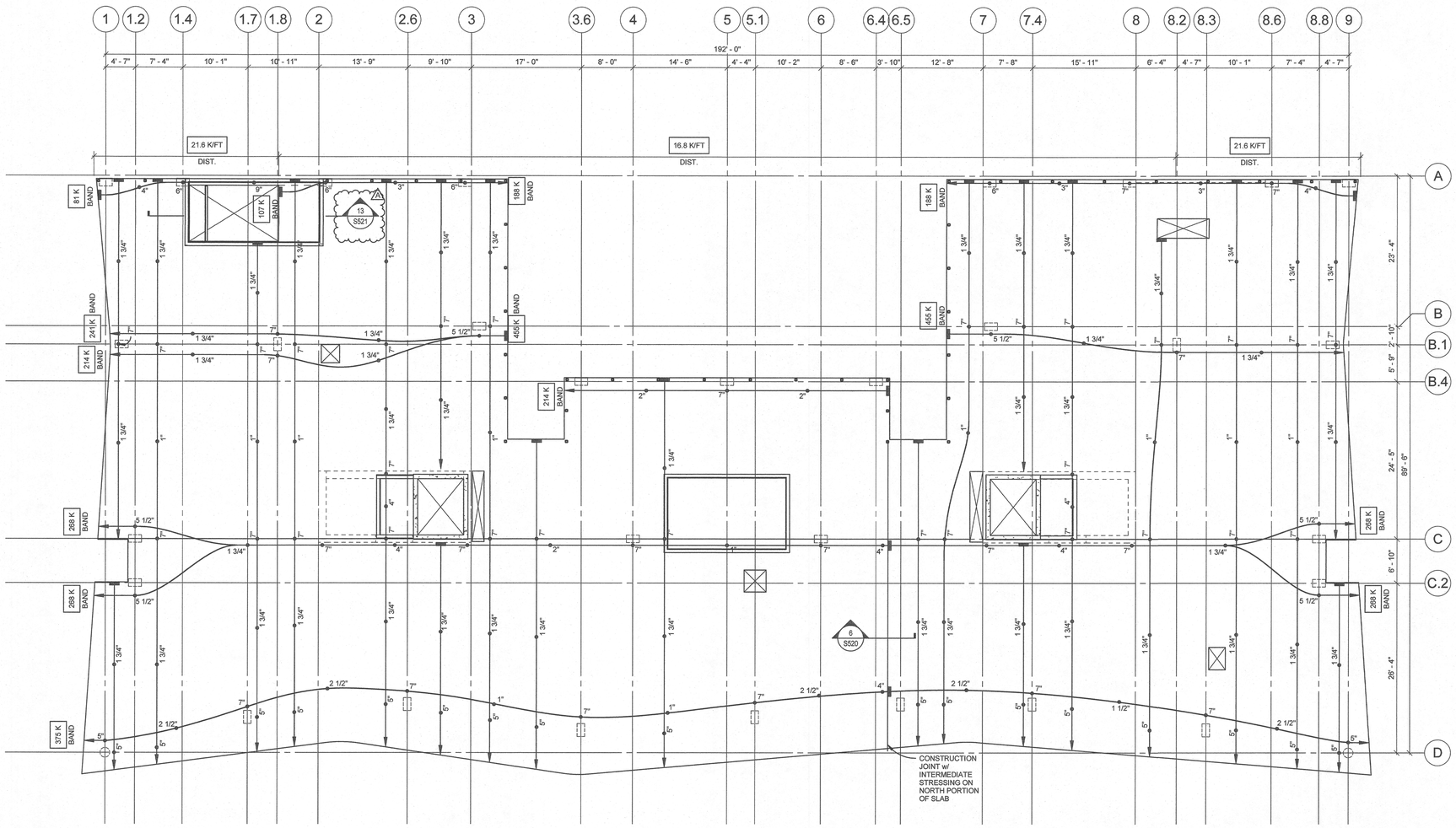

1 ROOF POST-TENSIONING PLAN

1/8" = 1'-0"

POST TENSIONING PLAN NOTES:

1. REF. SHEET S002 AND S003 FOR GENERAL STRUCTURAL NOTES.
2. REF. SHEETS S520 AND S521 FOR TYPICAL POST TENSION DETAILS.
3. REF. SLAB PLAN FOR ADDITIONAL INFORMATION.
4. INDICATES POST TENSIONED DEAD END.
5. INDICATES POST TENSIONED STRESSING END.
6. X" — INDICATES DISTANCE FROM BOTTOM OF SLAB TO CENTER OF GRAVITY OF POST TENSIONED TENDONS.
7. INDICATES INTERMEDIATE STRESSING ANCHORAGE LOCATE AT CENTER OF GRAVITY OF SLAB.
8. REF. MECH. AND ELECT. DRAWINGS FOR PIPE AND CONDUIT LOCATIONS. NOTIFY EOR OF ANY OPENINGS NOT CONFORMING TO TYPICAL DETAILS.
9. XXX K — INDICATES EFFECTIVE FORCE FOR CONTINUOUS BANDED POST TENSIONED TENDONS (KIPS).
10. XXX K/FT — INDICATES EFFECTIVE FORCE FOR DISTRIBUTED BANDED POST TENSIONED TENDONS (KIPS/FT.).
11. X"-B — INDICATES DISTANCE FROM BOTTOM OF BEAM TO CENTER OF GRAVITY OF POST TENSIONED TENDONS.

LRS ARCHITECTS
720 NW Davis 503.221.1121
Suite 300 503.221.2077
Portland OR 97209 www.lrsarchitects.com

REGISTERED PROFESSIONAL ENGINEER — 79476PE — OREGON — JOSHUA P. RICHARDS — EXPIRES 12-31-18

LEVERARCHITECTURE
4713 N ALBINA AVE, PDX OR 97217
T 503 928 6040
www.leverarchitecture.com

CONSULTANT:

kpff
111 SW Fifth Ave., Suite 2500
Portland, OR 97204
O: 503.227.3251
F: 503.227.7980
www.kpff.com

PROJECT NUMBER: 1600385-R17

GRAND AVENUE APARTMENTS

1010 NE GRAND AVE. PORTLAND, OR 97232

SHEET TITLE:
ROOF POST-TENSIONING PLAN

DRAWN BY: BJS
DATE CREATED: 08-10-2017

A	Plan Check Review	09.01.2017

City of Portland REVIEWED FOR CODE COMPLIANCE DEC 22 2017 Permit Number

RECEIVED SEP 06 2017 BDS DOCUMENT SERVICES

SHEET:
S213P
ADDENDUM #1
08-10-2017

LRS Architects, Inc ©2017

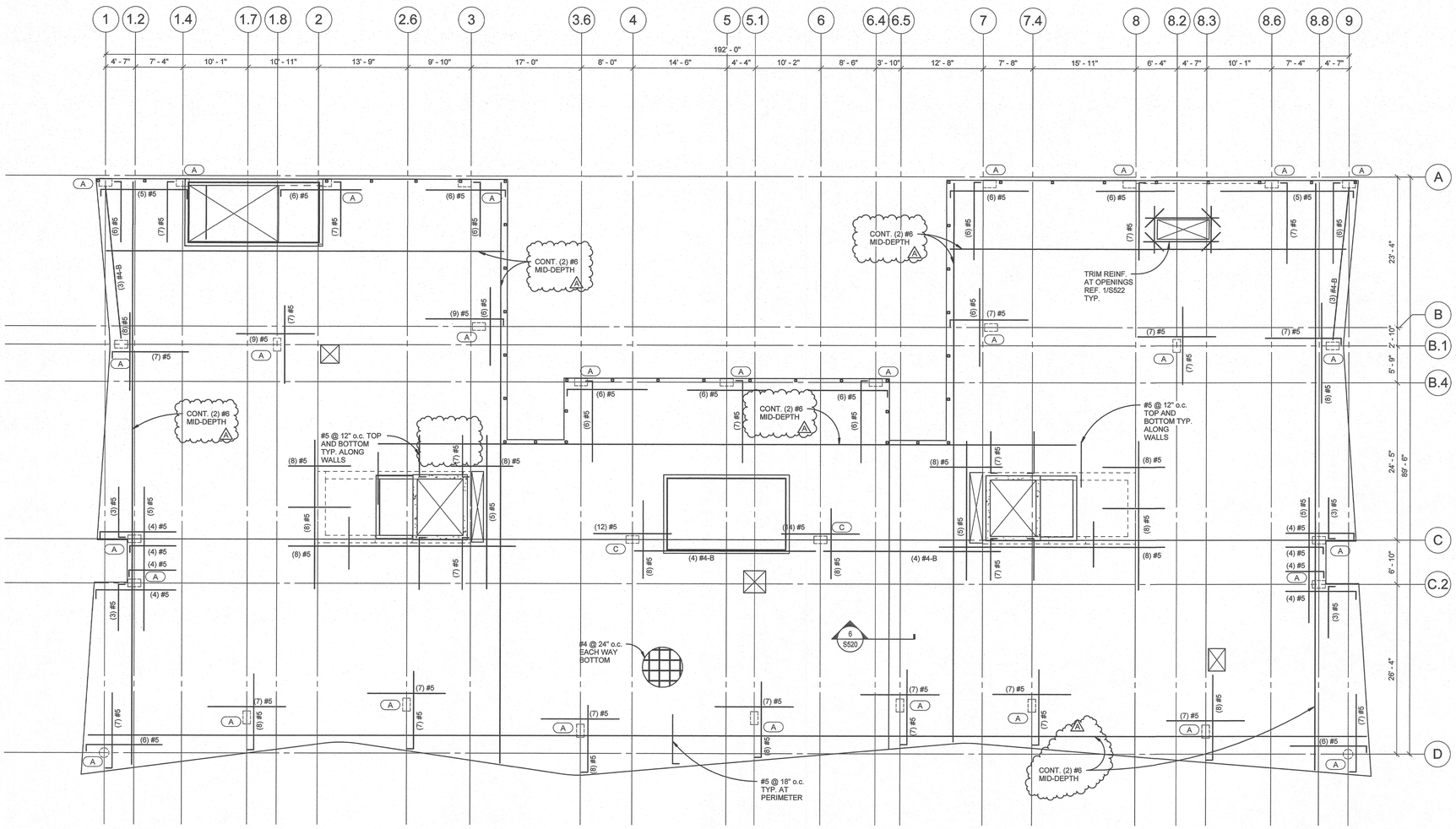

1 ROOF REINFORCING PLAN

1/8" = 1'-0"

REINFORCING PLAN NOTES:

1. REF. SHEETS S002 AND S003 FOR GENERAL STRUCTURAL NOTES.
2. REF. SHEETS S520 THRU S523 FOR TYPICAL CONCRETE DETAILS.
3. REF. MEP DRAWINGS FOR PIPE AND CONDUIT. NOTIFY EOR OF ANY OPENINGS NOT CONFORMING TO TYPICAL DETAILS.
4. REF. S401 FOR COLUMN SCHEDULE.
5. (X) #X — INDICATES NUMBER OF REINFORCING. PLACED AT TOP OF SLAB U.N.O. REF. DETAIL 1/S521 AT COLUMNS.
6. (X)#X-B — INDICATES NUMBER OF ADDITIONAL REINFORCING PLACED AT BOTTOM OF SLAB DISTRIBUTE PER 1/S521.
7. ALL TOP REINF. MUST EXTEND 1/3 SPAN BEYOND SUPPORT U.N.O.
8. (X) — INDICATES STUD RAIL TYPE WHERE REQUIRED AT COLUMNS REF. S522 FOR DETAILS.
9. REF. 9/S521 FOR ADDITIONAL REINF. AT CONCRETE WALLS.
10. REF. 5/S521 THRU 7/S521 FOR TYP. REINF. AT SLAB CORNERS.
11. REF. 2/S520 AND 3/S520 FOR REINF. AT TENDON ANCHORAGE.
12. REF. SLAB PLAN FOR ADDITIONAL INFORMATION AND DETAIL REFERENCES.

LRS ARCHITECTS
720 NW Davis 503.221.1121
Suite 300 503.221.2077
Portland OR 97209 www.lrsarchitects.com

STRUCTURAL ENGINEER
REGISTERED PROFESSIONAL ENGINEER
79476PE
OREGON
DEC. 13 2005
JOSHUA P. RICHARDS
EXPIRES 12-31-18

LEVERARCHITECTURE
4713 N ALBINA AVE, PDX OR 97217
T 503 928 6040
www.leverarchitecture.com

CONSULTANT:

kpff
111 SW Fifth Ave., Suite 2500
Portland, OR 97204
O: 503.227.3251
F: 503.227.7980
www.kpff.com

PROJECT NUMBER: *1600385-R17*

GRAND AVENUE APARTMENTS

1010 NE GRAND AVE. PORTLAND, OR 97232

SHEET TITLE:
ROOF REINFORCING PLAN

DRAWN BY: *BJS*
DATE CREATED: *08-10-2017*

A	Plan Check Review	09.01.2017

City of Portland REVIEWED FOR CODE COMPLIANCE DEC 22 2017 Permit Number

RECEIVED SEP 06 2017 BDS DOCUMENT SERVICES

SHEET:
S213R
ADDENDUM #1
08-10-2017

LRS Architects, Inc. ©2017

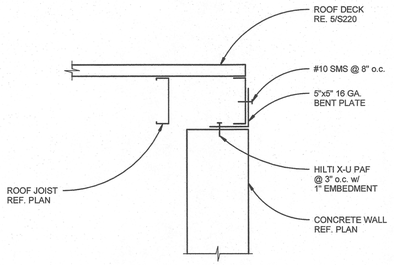

NOTE:
AT INTERIOR CONCRETE WALL TRACK
MAY BE CENTERED ON WALL AND FASTENED
DIRECTLY AT CONTRACTOR'S OPTION.

8 TYPICAL ROOF JOIST PARALLEL TO CONCRETE WALL
1 1/2" = 1'-0"

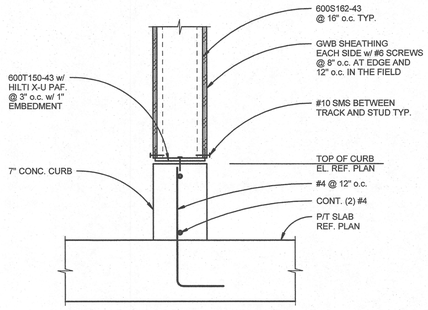

NOTE:

1. PROVIDE DOUBLE STUD AT DOOR JAMB.
2. PROVIDE FLAT STRAP BLOCKING AT HORIZ. JOINTS IN SHEATHING REF. 10/S220.

4 PENTHOUSE WALL AT CURB
1 1/2" = 1'-0"

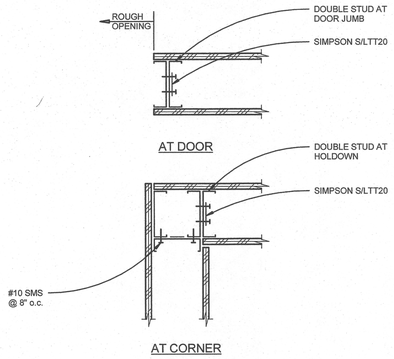

9 TYPICAL WALL HOLDOWN
1 1/2" = 1'-0"

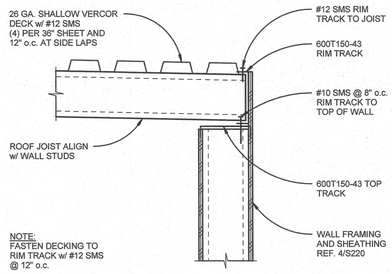

NOTE:
FASTEN DECKING TO
RIM TRACK w/ #12 SMS
@ 12" o.c.

5 TYPICAL ROOF JOIST PERPENDICULAR TO WALL
1 1/2" = 1'-0"

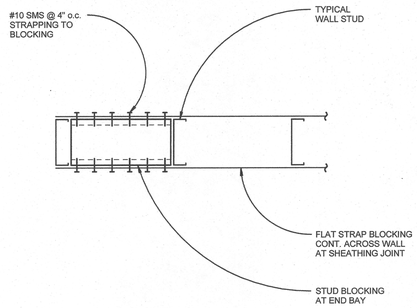

10 TYPICAL SHEAR WALL STRAP BLOCKING
1 1/2" = 1'-0"

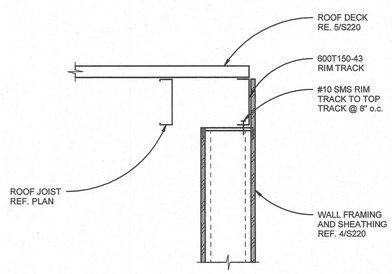

6 TYPICAL ROOF JOIST PARALLEL TO WALL
1 1/2" = 1'-0"

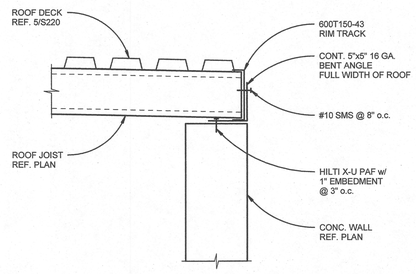

7 TYPICAL ROOF JOIST PERPENDICULAR TO CONCRETE WALL
1 1/2" = 1'-0"

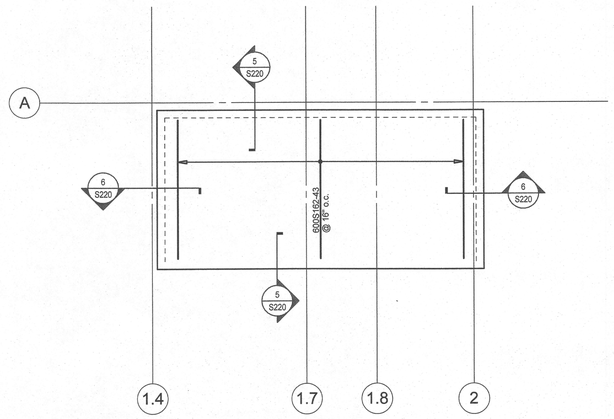

NOTE:
COORDINATE BOTTOM OF DECK ELEVATION WITH ARCH.

1 STAIR 2 OVERRUN
1/4" = 1'-0"

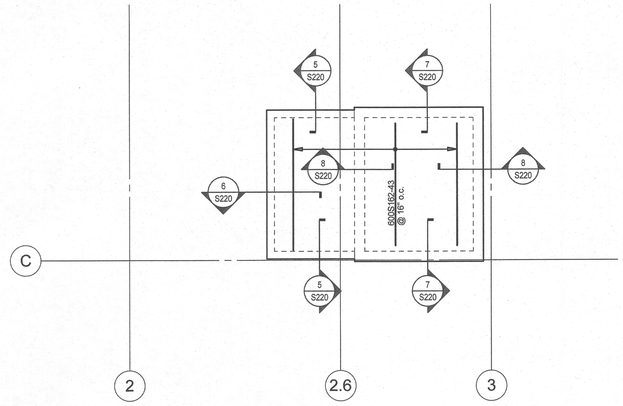

NOTE:
COORDINATE BOTTOM OF DECK ELEVATION WITH ARCH.

2 ELEVATOR MACHINE ROOM
1/4" = 1'-0"

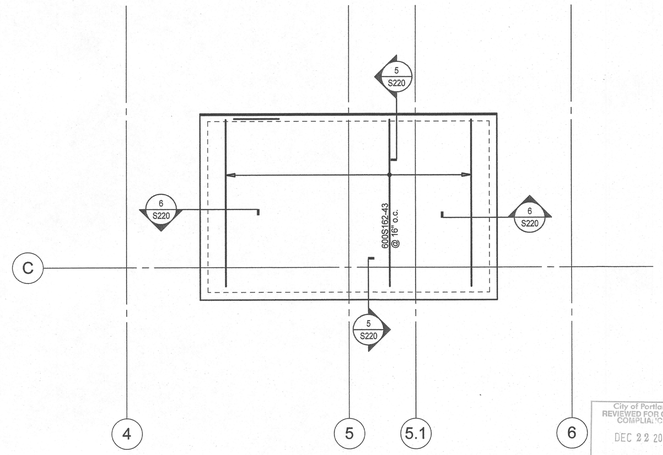

NOTE:
COORDINATE BOTTOM OF DECK ELEVATION WITH ARCH.

3 MECHANICAL PENTHOUSE
1/4" = 1'-0"

City of Portland
REVIEWED FOR CODE COMPLIANCE
DEC 22 2017
Permit Number

LRS ARCHITECTS
720 NW Davis 503.221.1121
Suite 300 503.221.2077
Portland OR 97209 www.lrsarchitects.com

STRUCTURAL
REGISTERED PROFESSIONAL ENGINEER
79478PE
OREGON
JOSHUA P. RICHARDS
EXPIRES 12-31-18

LEVERARCHITECTURE
4713 N ALBINA AVE, PDX OR 97217
T 503 928 6040
www.leverarchitecture.com

CONSULTANT:

kpff
111 SW Fifth Ave., Suite 2500
Portland, OR 97204
O: 503.227.3251
F: 503.227.7980
www.kpff.com

PROJECT NUMBER: 1600385-R17

GRAND AVENUE APARTMENTS

1010 NE GRAND AVE. PORTLAND, OR 97232

SHEET TITLE:
PENTHOUSE FRAMING PLANS AND DETAILS

DRAWN BY: BJS
DATE CREATED: 07-14-2017

SHEET:
S220
PERMIT SET
07-14-2017

LRS Architects, Inc. ©2017

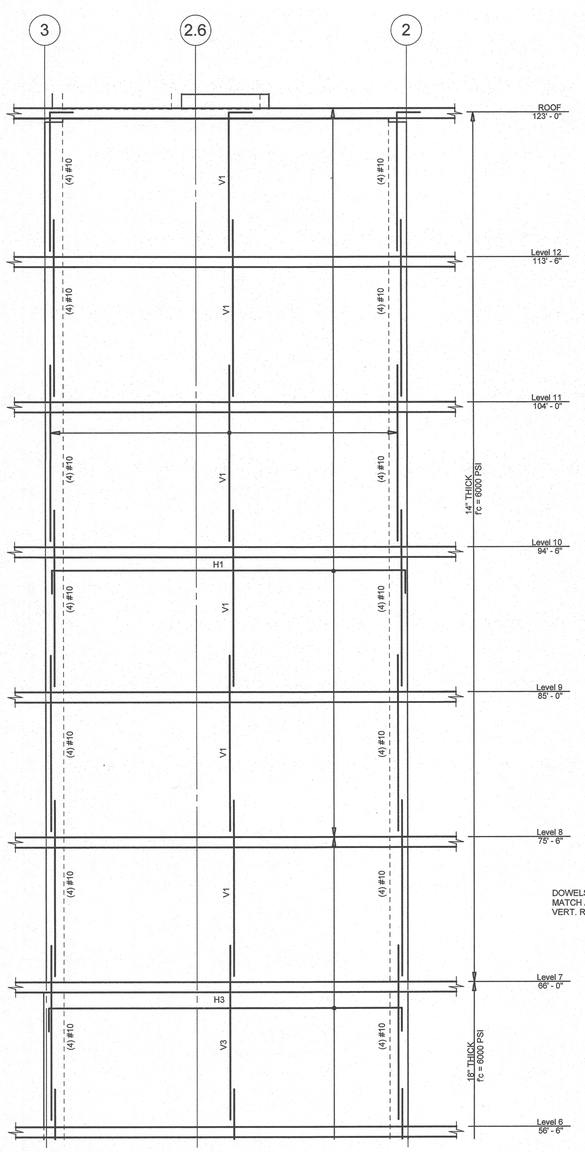

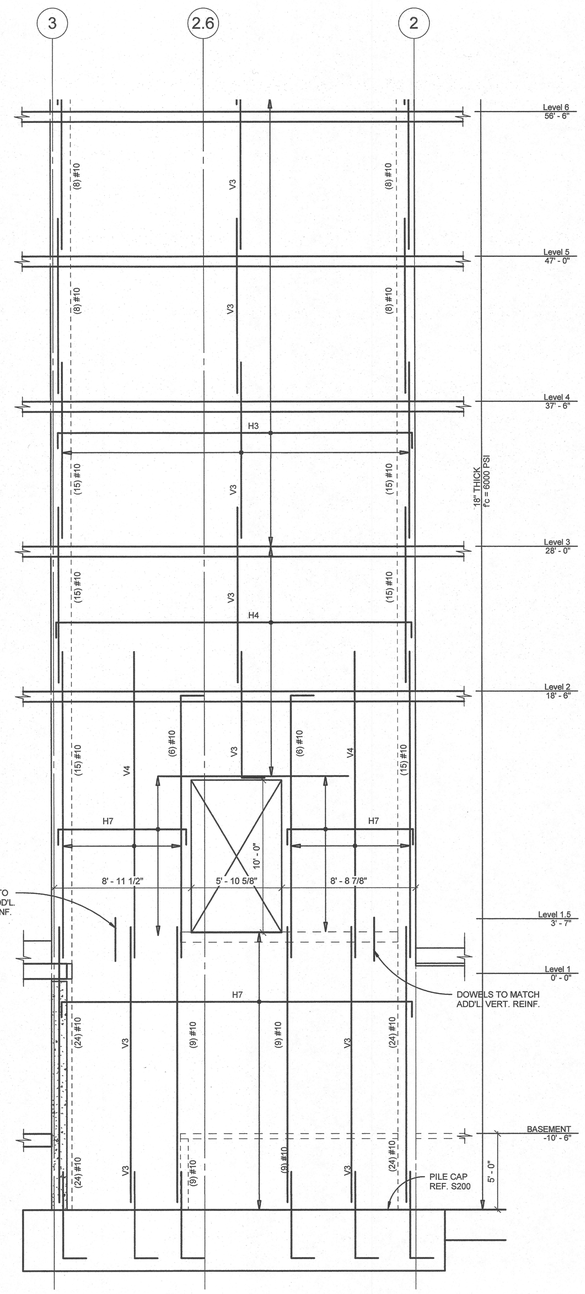

B SHEAR WALL ELEVATION
1/4" = 1'-0"

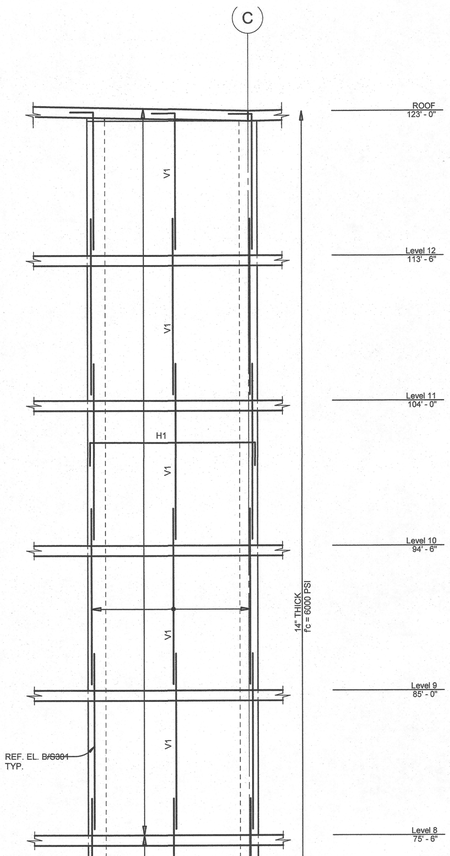

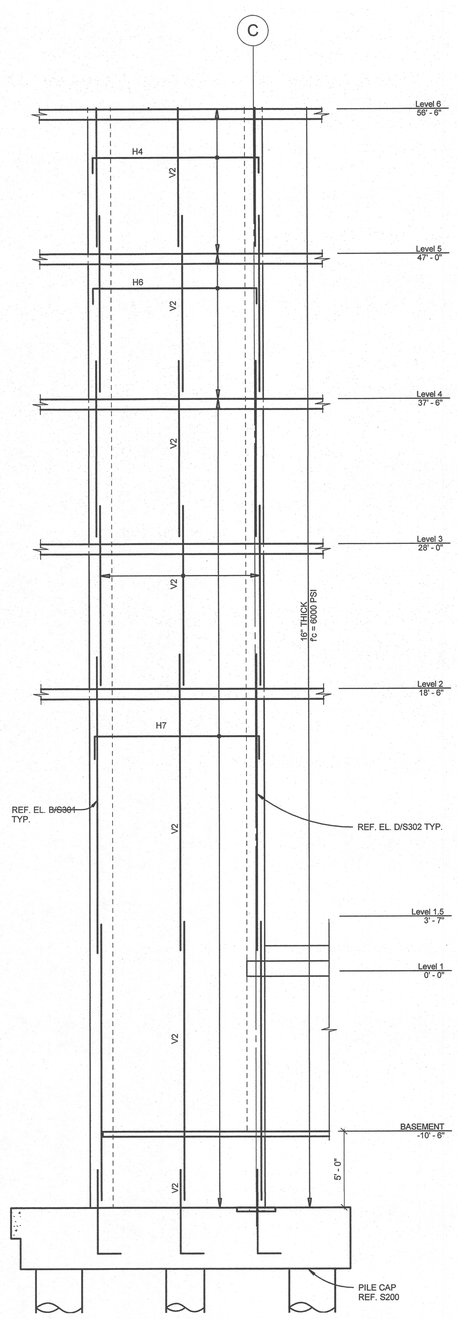

A SHEAR WALL ELEVATION
1/4" = 1'-0"

TABLE NOTES:

1. REF. S002 AND S003 FOR GENERAL STRUCTURAL NOTES.
2. CONCRETE SHEAR WALLS ARE PART OF THE SEISMIC LOAD RESISTING SYSTEM (SLRS).
3. REINFORCING TO BE ASTM A706, GRADE 60 DEFORMED BARS.
4. MINIMUM CLEAR COVER AND SPACING TO BE PROVIDED. FOR CENTER-TO-CENTER SPACING LESS THAN 4db MULTIPLY LAP LENGTHS ABOVE BY 1.3.
5. ALL CONFINED VERTICAL REINFORCING BARS AT WALL ENDS ARE CONSIDERED BOUNDARY BARS.
6. LOCATE AND COORDINATE ALL CONCRETE EMBEDMENTS, SLEEVES AND PENETRATIONS PRIOR TO POUR. OPENINGS NOT SPECIFICALLY SHOWN ON THIS ELEVATION SHALL BE APPROVED BY KPFF PRIOR TO THE START OF CONSTRUCTION.
7. HX, VX INDICATES WALL VERTICAL AND HORIZONTAL REINFORCING. REF. SCHEDULE ON 1/S301.
8. HOOK ALL VERTICAL AND HORIZONTAL WALL BARS INTERRUPTED BY OPENINGS OR PROVIDE "U" CAP BARS.
9. REF. 1/S305 FOR LOCATION OF BOUNDARY ELEMENTS.
10. PROVIDE (2) #5x4'-0" DIAGONALLY AT CORNERS OF ALL OPENINGS AND (2) #5 BARS OVER, UNDER AND AT THE SIDES OF THE OPENINGS REF. S002.
11. 0'-0" PROJECT ELEVATION EQUALS 125.83' TYP.

REINFORCING NOTES:
FOR TYPICAL GRAVITY RESISTING ELEMENTS, REBAR LAP SPLICES SHALL BE PER THE GENERAL STRUCTURAL NOTES, U.N.O.
FOR SHEAR LATERAL RESISTING SYSTEMS (SLRS), MINIMUM REBAR LAP SPLICES SHALL BE AS FOLLOWS, U.N.O.:

SHEAR WALLS LAP SPLICE LENGTH SCHEDULE (IN.)

f'c = 6,000 PSI

BAR SIZE	VERTICAL BARS	HORIZ. BARS	BOUNDARY BARS
#3	12	12	12
#4	14	20	16
#5	16	30	20
#6	22	40	24
#7	36	64	36
#8	44	80	44
#9	54	96	56
#10	66	116	68
#11	78	136	80

SHEAR WALL VERTICAL REINFORCING SCHEDULE

MARK	REINFORCING
V1	#5 @ 16" o.c. EACH FACE
V2	#5 @ 14" o.c. EACH FACE
V3	#5 @ 12" o.c. EACH FACE
V4	#5 @ 6" o.c. EACH FACE

SHEAR WALL HORIZONTAL REINFORCING SCHEDULE

MARK	REINFORCING
H1	#5 @ 16" o.c. EACH FACE
H2	#5 @ 14" o.c. EACH FACE
H3	#5 @ 12" o.c. EACH FACE
H4	#5 @ 10" o.c. EACH FACE
H5	#5 @ 9" o.c. EACH FACE
H6	#5 @ 8" o.c. EACH FACE
H7	#5 @ 6" o.c. EACH FACE

1 SHEAR WALL REINFORCING SCHEDULE
N.T.S.

City of Portland
REVIEWED FOR CODE COMPLIANCE
DEC 22 2017
Permit Number

LRS ARCHITECTS
720 NW Davis 503.221.1121
Suite 300 503.221.2077
Portland OR 97209 www.lrsarchitects.com

STRUCTURAL REGISTERED PROFESSIONAL ENGINEER 79476PE OREGON JOSHUA P. RICHARDS
EXPIRES 12-31-18

LEVERARCHITECTURE
4713 N ALBINA AVE, PDX OR 97217
T 503 928 6040
www.leverarchitecture.com

CONSULTANT:

kpff
111 SW Fifth Ave., Suite 2500
Portland, OR 97204
O: 503.227.3251
F: 503.227.7980
www.kpff.com

PROJECT NUMBER: *1600385-R17*

GRAND AVENUE APARTMENTS

1010 NE GRAND AVE. PORTLAND, OR 97232

SHEET TITLE:
SHEAR WALL ELEVATIONS

DRAWN BY: *BJS*
DATE CREATED: *07-14-2017*

SHEET:
S301
PERMIT SET
07-14-2017

LRS Architects, Inc ©2017

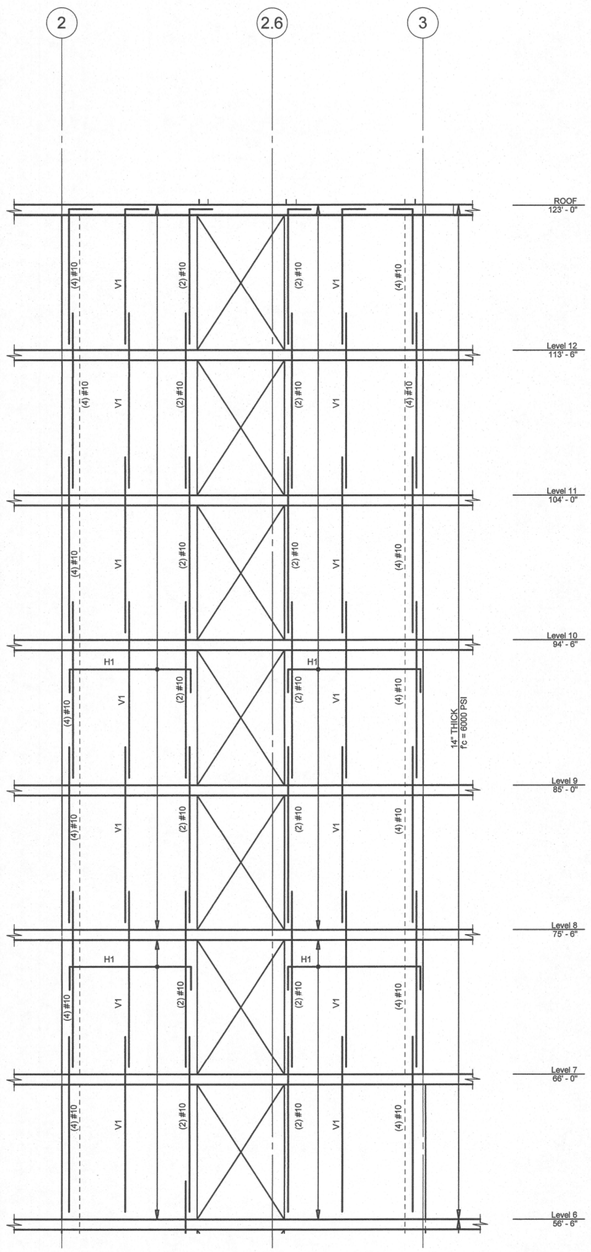

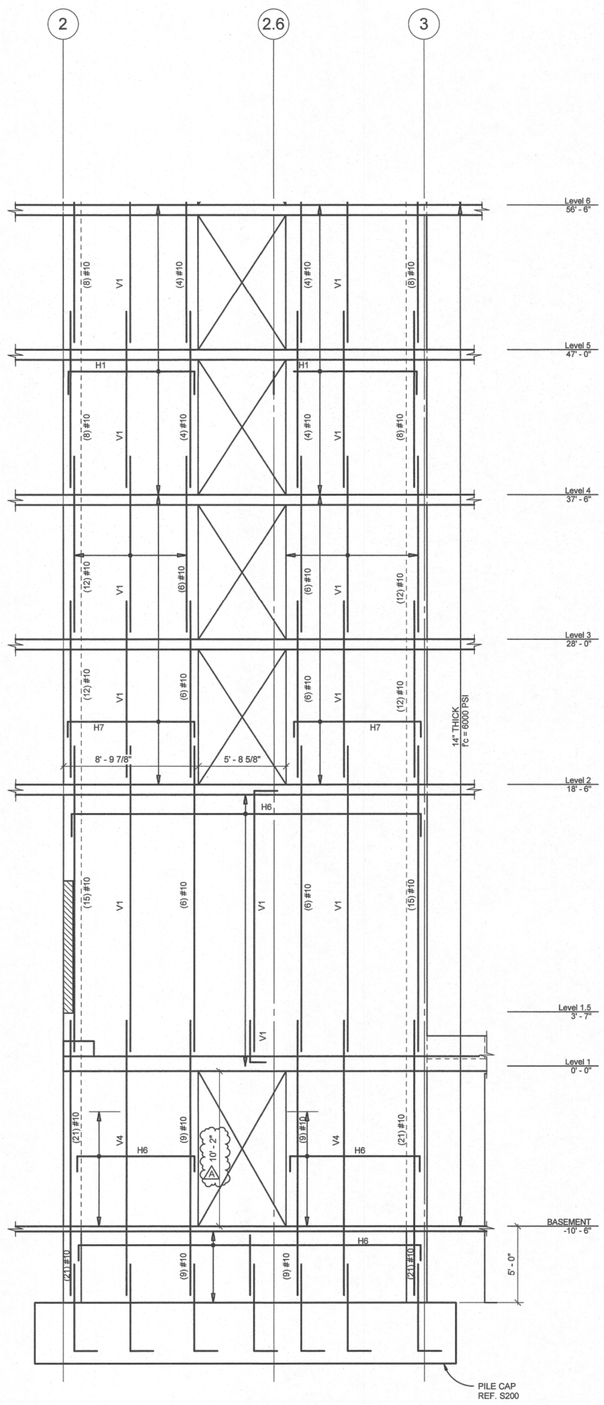

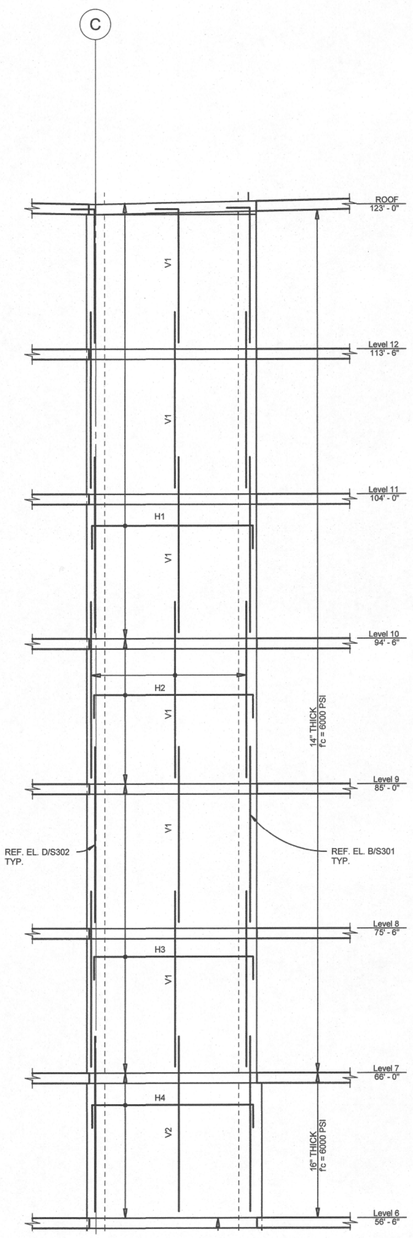

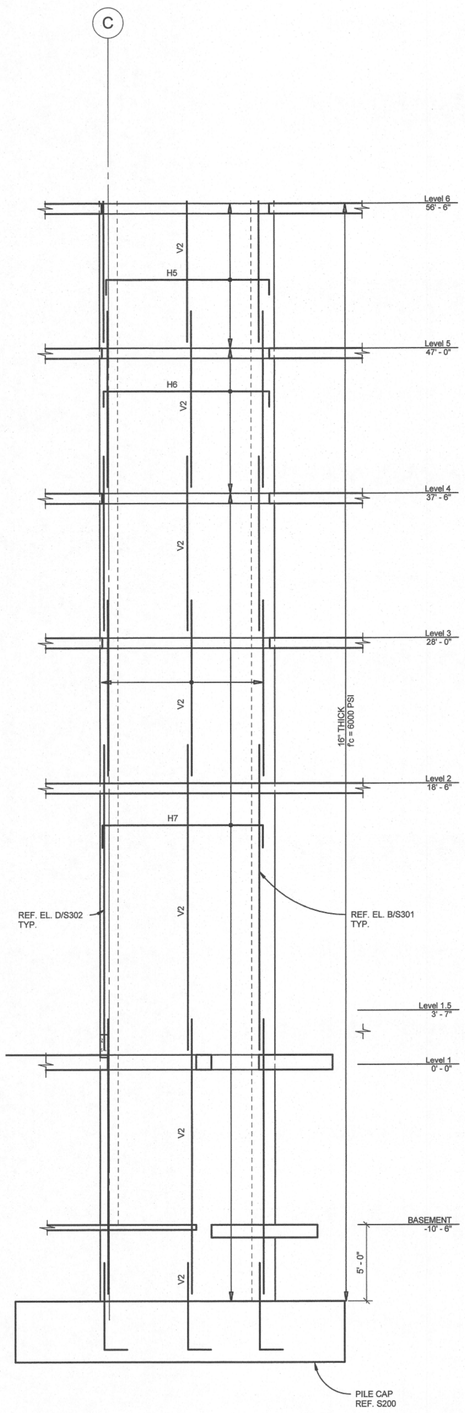

D SHEAR WALL ELEVATION
1/4" = 1'-0"

NOTE:
REF. S301 FOR ELEVATION NOTES.

C SHEAR WALL ELEVATION
1/4" = 1'-0"

LRS ARCHITECTS
720 NW Davis 503.221.1121
Suite 300 503.221.2077
Portland OR 97209 www.lrsarchitects.com

STRUCTURAL REGISTERED PROFESSIONAL ENGINEER 79476PE OREGON JOSHUA P. RICHARDS
EXPIRES 12-31-18

LEVERARCHITECTURE
4713 N ALBINA AVE, PDX OR 97217
T 503 928 6040
www.leverarchitecture.com

CONSULTANT:

kpff
111 SW Fifth Ave., Suite 2500
Portland, OR 97204
O: 503.227.3251
F: 503.227.7980
www.kpff.com

PROJECT NUMBER: *1600385-R17*

GRAND AVENUE APARTMENTS

1010 NE GRAND AVE. PORTLAND, OR 97232

SHEET TITLE:
SHEAR WALL ELEVATIONS

DRAWN BY: *BJS*
DATE CREATED: *08-10-2017*

A	Plan Check Review	09.01.2017

City of Portland REVIEWED FOR CODE COMPLIANCE DEC 22 2017 Permit Number

RECEIVED SEP 06 2017 BDS DOCUMENT SERVICES

SHEET:
S302
ADDENDUM #1
08-10-2017

LRS Architects, Inc. ©2017

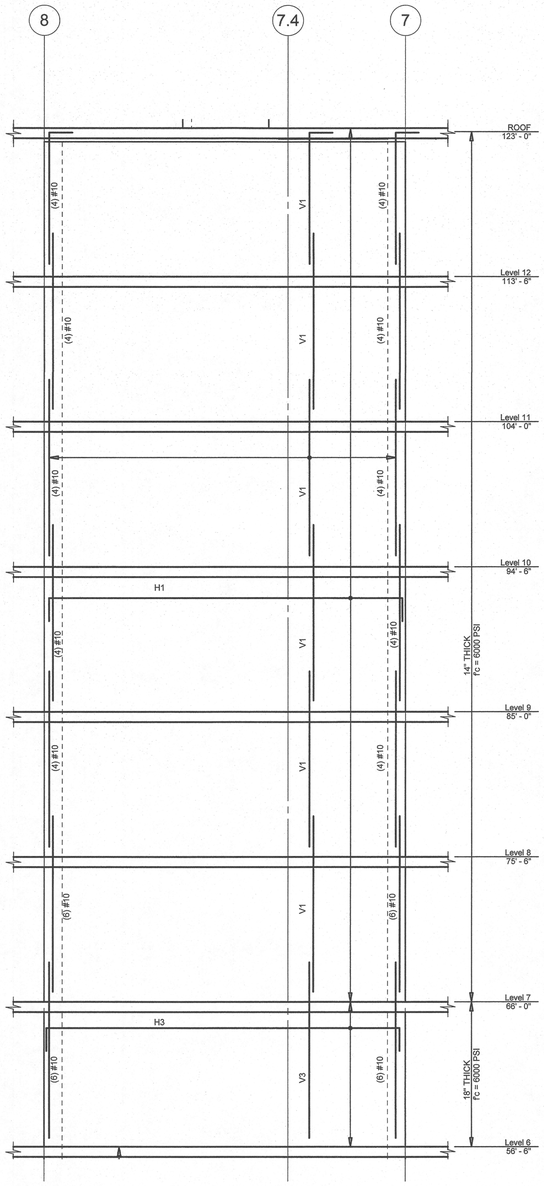

F SHEAR WALL ELEVATION

1/4" = 1'-0"

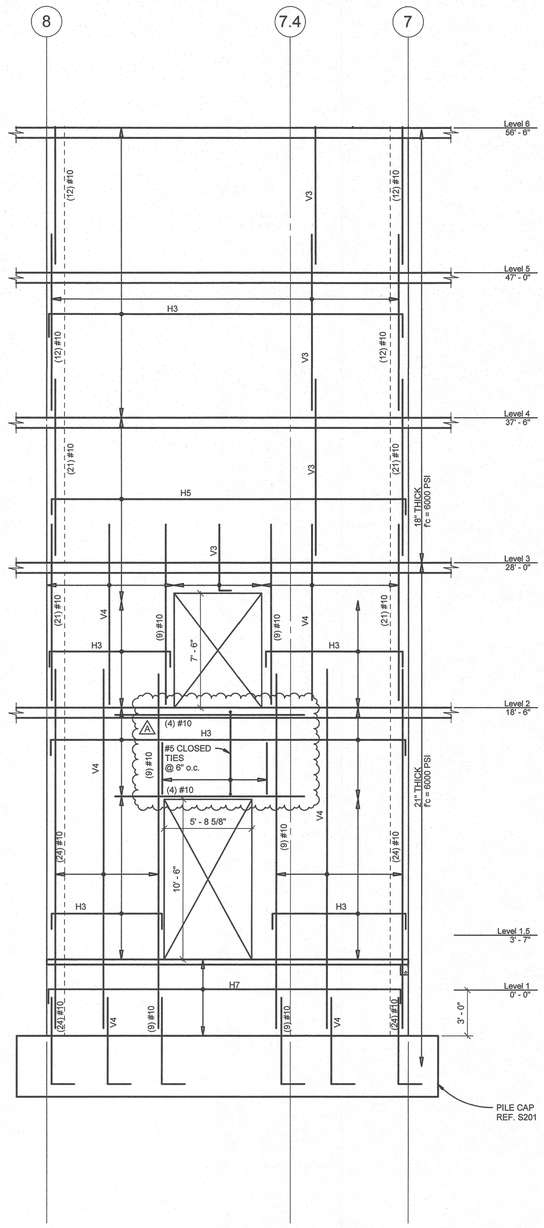

NOTE:
REF. S301 FOR ELEVATION NOTES.

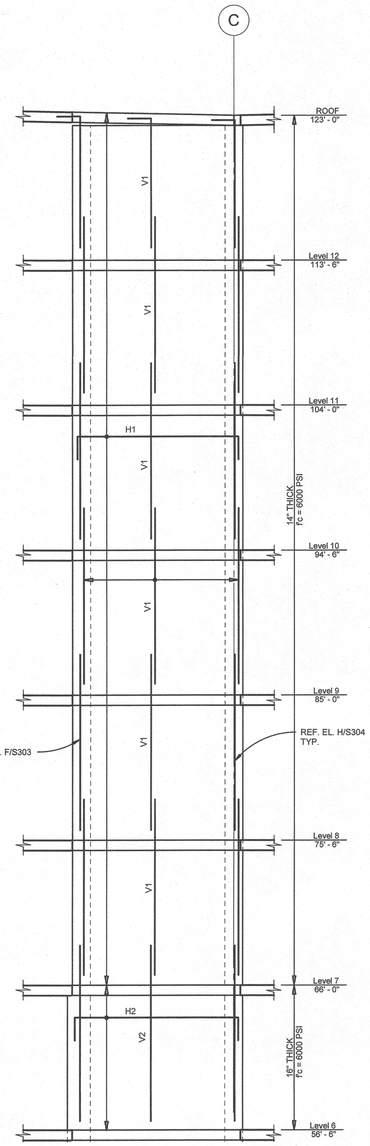

E SHEAR WALL ELEVATION

1/4" = 1'-0"

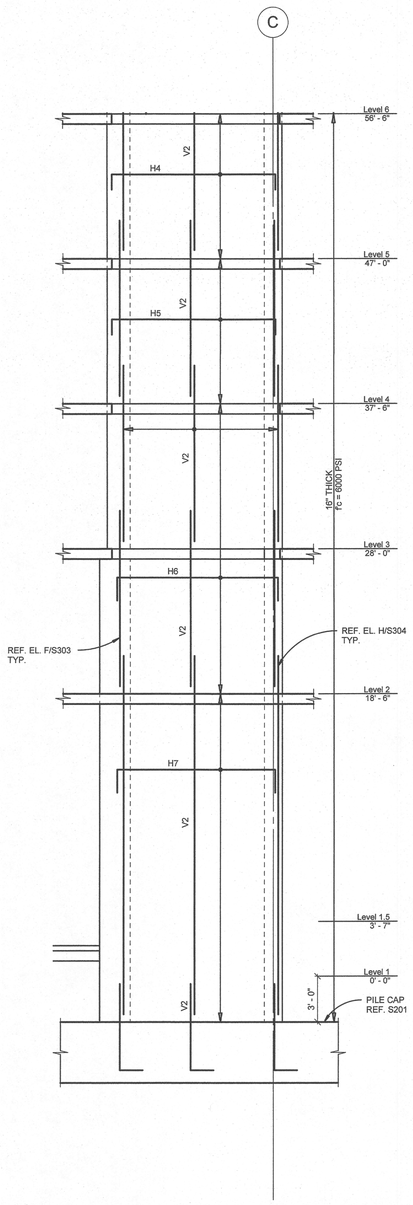

LRS ARCHITECTS
720 NW Davis 503.221.1121
Suite 300 503.221.2077
Portland OR 97209 www.lrsarchitects.com

STRUCTURAL
REGISTERED PROFESSIONAL ENGINEER
79476PE
OREGON
JAN. 13, 2006
JOSHUA P. RICHARDS
EXPIRES 12-31-18

LEVERARCHITECTURE
4713 N ALBINA AVE, PDX OR 97217
T 503 928 6040
www.leverarchitecture.com

CONSULTANT:

kpff
111 SW Fifth Ave., Suite 2500
Portland, OR 97204
O: 503.227.3251
F: 503.227.7980
www.kpff.com

PROJECT NUMBER: *1600385-R17*

GRAND AVENUE APARTMENTS

1010 NE GRAND AVE. PORTLAND, OR 97232

SHEET TITLE:
SHEAR WALL ELEVATIONS

DRAWN BY: *BJS*
DATE CREATED: *08-10-2017*

A	Plan Check Review	09.01.2017

City of Portland
REVIEWED FOR CODE COMPLIANCE
DEC 22 2017
Permit Number

RECEIVED
SEP 06 2017
BDS
DOCUMENT SERVICES

SHEET:
S303
ADDENDUM #1
08-10-2017

LRS Architects, Inc. ©2017

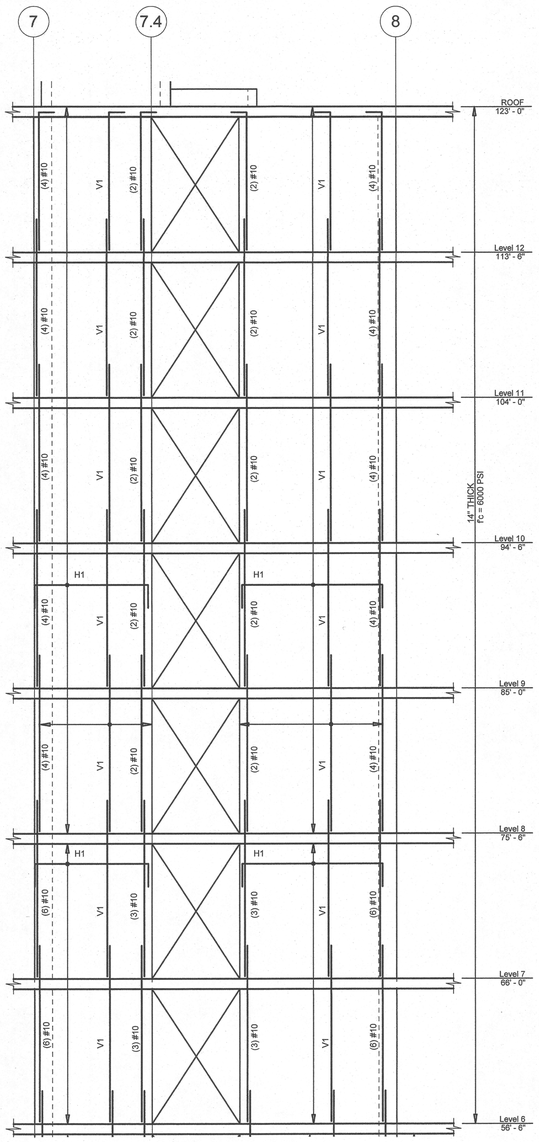

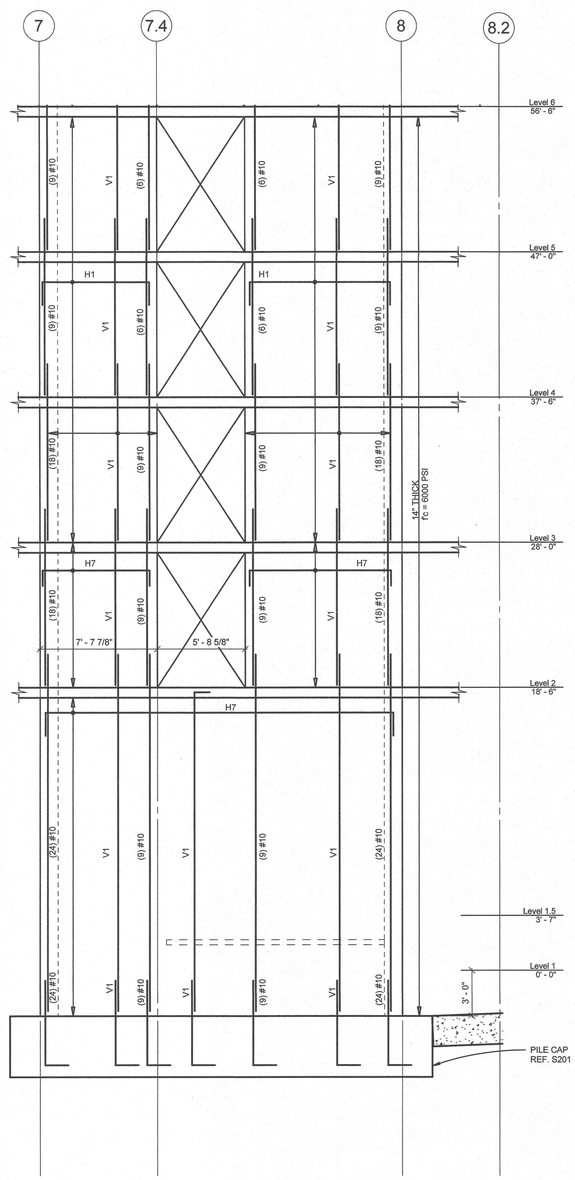

H SHEAR WALL ELEVATION

1/4" = 1'-0"

NOTE:
REF. S301 FOR ELEVATION NOTES.

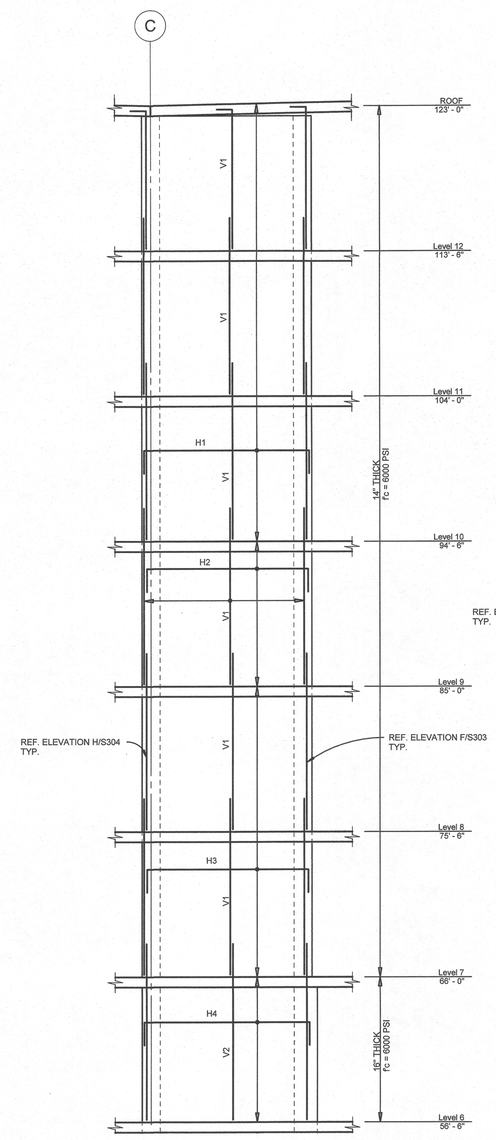

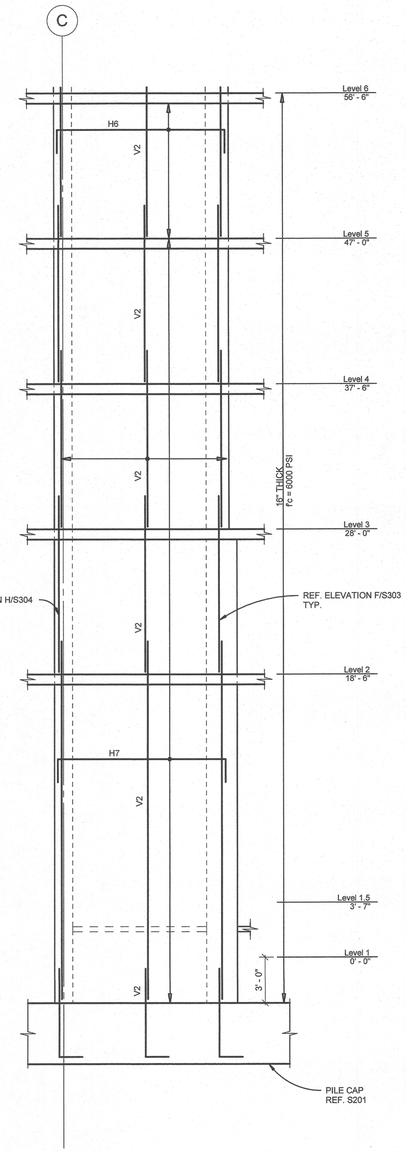

G SHEAR WALL ELEVATION

1/4" = 1'-0"

LRS ARCHITECTS
720 NW Davis 503.221.1121
Suite 300 503.221.2077
Portland OR 97209 www.lrsarchitects.com

STRUCTURAL
REGISTERED PROFESSIONAL ENGINEER
79478PE
OREGON
DEC. 11, 2012
JOSHUA P. RYCHARDS
EXPIRES 12-31-18

LEVERARCHITECTURE
4713 N ALBINA AVE, PDX OR 97217
T 503 928 6040
www.leverarchitecture.com

CONSULTANT:

kpff
111 SW Fifth Ave., Suite 2500
Portland, OR 97204
O: 503.227.3251
F: 503.227.7980
www.kpff.com

PROJECT NUMBER: 1600385-R17

GRAND AVENUE APARTMENTS

1010 NE GRAND AVE. PORTLAND, OR 97232

SHEET TITLE:
SHEAR WALL ELEVATIONS

DRAWN BY: BJS
DATE CREATED: 07-14-2017

City of Portland
REVIEWED FOR CODE COMPLIANCE
DEC 22 2017
Permit Number

SHEET:
S304
PERMIT SET
07-14-2017

LRS Architects, Inc. ©2017

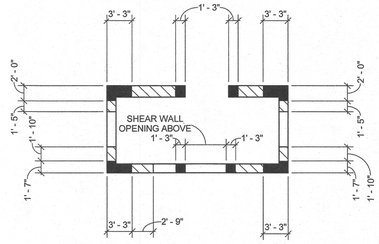

SOUTH CORE - GROUND FLOOR

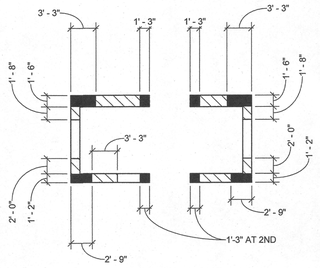

SOUTH CORE - SECOND FLOOR

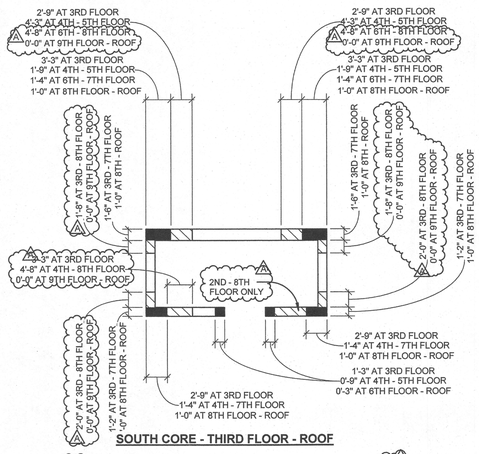

SOUTH CORE - THIRD FLOOR - ROOF

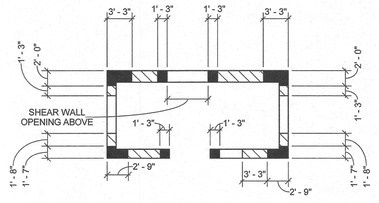

NORTH CORE - FOUNDATION

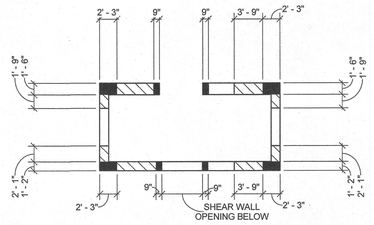

NORTH CORE - GROUND FLOOR

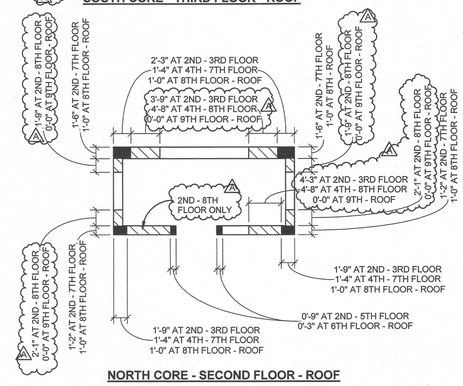

NORTH CORE - SECOND FLOOR - ROOF

NOTES:

1. INDICATES EXTENTS OF TIED BOUNDARY ELEMENT VERTICALS REF. DETAILS 2 AND 3 ON DRAWING S305
2. INDICATES EXTENTS OF TIED FIELD REINFORCEMENT. REF. 4/S305

1 BOUNDARY ELEMENT EXTENTS

1/8" = 1'-0"

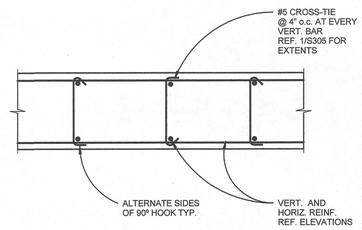

4 TIED FIELD REINF. DETAIL

1" = 1'-0"

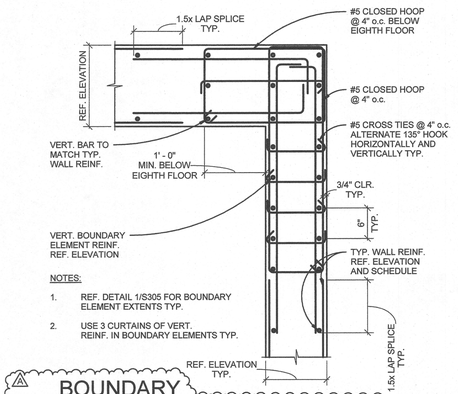

NOTES:

1. REF. DETAIL 1/S305 FOR BOUNDARY ELEMENT EXTENTS TYP.
2. USE 3 CURTAINS OF VERT. REINF. IN BOUNDARY ELEMENTS TYP.

2 BOUNDARY ELEMENT AT WALL CORNER

1" = 1'-0"

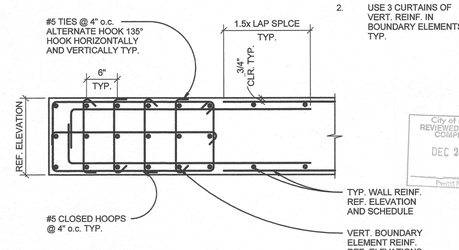

NOTES:

1. REF. DETAIL 1/S305 FOR BOUNDARY ELEMENT EXTENTS TYP.
2. USE 3 CURTAINS OF VERT. REINF. IN BOUNDARY ELEMENTS TYP.

3 BOUNDARY ELEMENT AT WALL END

1" = 1'-0"

LRS ARCHITECTS
720 NW Davis 503.221.1121
Suite 300 503.221.2077
Portland OR 97209 www.lrsarchitects.com

STRUCTURAL ENGINEER 79476PE OREGON RENEWS: 12-31-18 JOSHUA P. RICHARDS
EXPIRES 12-31-18

LEVERARCHITECTURE
4713 N ALBINA AVE, PDX OR 97217
T 503 928 6040
www.leverarchitecture.com

CONSULTANT:

kpff
111 SW Fifth Ave., Suite 2500
Portland, OR 97204
O: 503.227.3251
F: 503.227.7980
www.kpff.com

PROJECT NUMBER: *1600385-R17*

GRAND AVENUE APARTMENTS

1010 NE GRAND AVE. PORTLAND, OR 97232

SHEET TITLE:

BOUNDARY ELEMENTS

DRAWN BY: *BJS*
DATE CREATED: *08-10-2017*

A	Plan Check Review	09.01.2017

City of Portland REVIEWED FOR CODE COMPLIANCE DEC 22 2017 Permit Number

RECEIVED SEP 06 2017 BDS DOCUMENT SERVICES

SHEET:

S305

ADDENDUM #1 08-10-2017

LRS Architects, Inc. ©2017

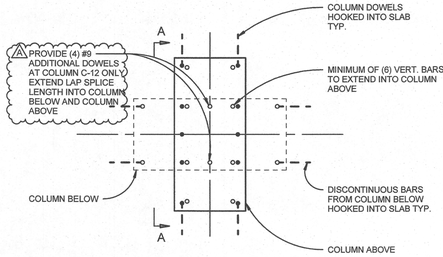

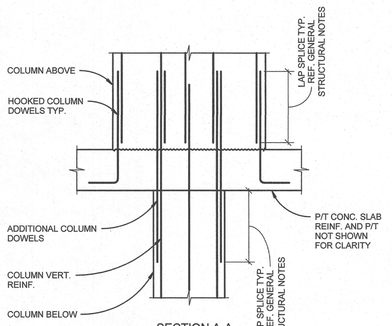

SECTION A-A

NOTES:

1. REF. COLUMN SCHEDULE FOR COLUMN DIMENSIONS, TIE SIZE AND SPACING AND LONGITUDINAL REINFORCING.
2. ● INDICATES LONGITUDINAL REINFORCING ABOVE.
3. ○ INDICATES LONGITUDINAL REINFORCING OR COLUMN DOWELS BELOW.
4. COLUMN TIES NOT SHOWN FOR CLARITY.

7 DETAIL AT COLUMN ORIENTATION TRANSITION

1" = 1'-0"

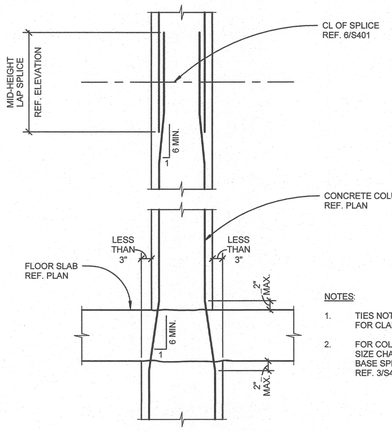

NOTES:

1. TIES NOT SHOWN FOR CLARITY.
2. FOR COLUMN SIZE CHANGE AT BASE SPLICE. REF. 3/S401.

5 COLUMN SIZE CHANGE AT MID-HEIGHT SPLICE LOCATIONS

1" = 1'-0"

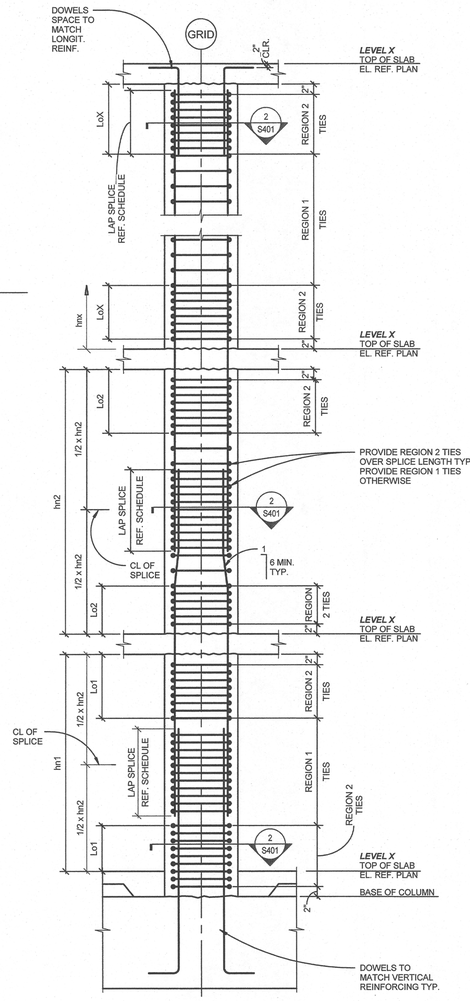

NOTE:

FOR EACH STORY OF COLUMN, Lox SHALL BE THE GREATER OF:
A) MAX. CROSS-SECTIONAL COLUMN DIMENSION.
B) hnx/6
C) 18"

6 CONCRETE COLUMN ELEVATION

N.T.S.

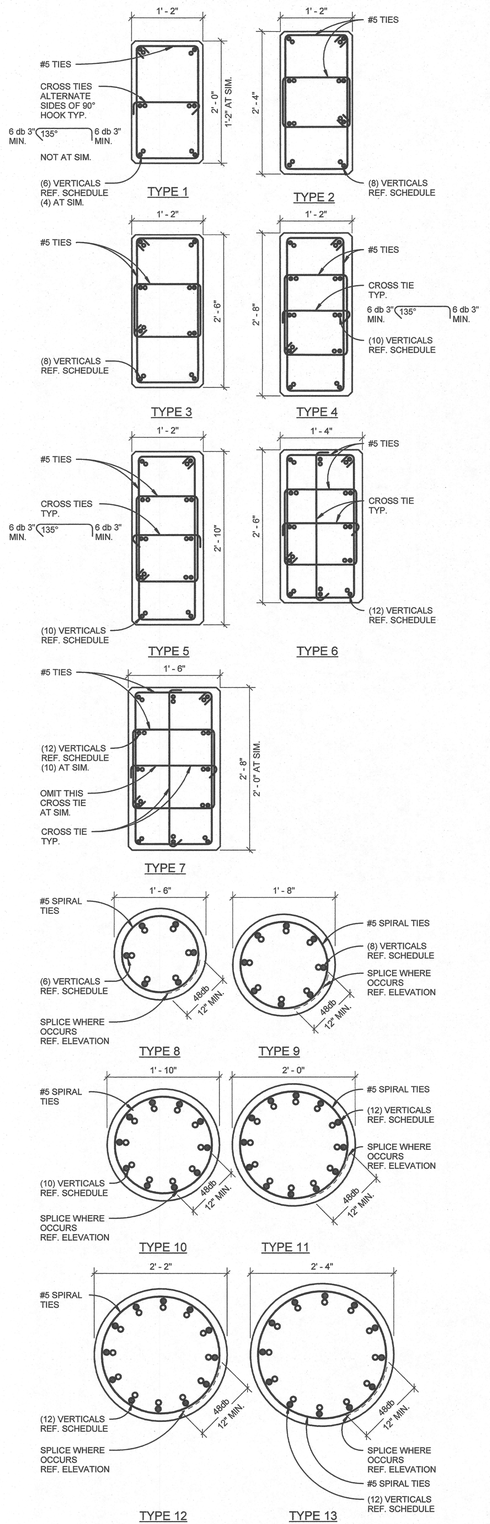

NOTES:

1. REF. CONCRETE COLUMN SCHEDULE FOR COLUMN DIMENSIONS, TIE SIZE AND SPACING AND LONGITUDINAL REINFORCING LONGITUDINAL BARS ARE TO BE EQUALLY SPACED.
2. ● INDICATES LONGITUDINAL REINFORCING ABOVE
3. ● INDICATES LONGITUDINAL REINFORCING OR COLUMN DOWELS BELOW.

2 COLUMN TYPES

1" = 1'-0"

	C-1	C-2	C-3	C-4	C-5	C-6	C-7	C-8	C-9	C-10	C-11	C-12	C-13
ROOF													
COLUMN SIZE	14x24	14x24	14x24	14x24	14x24	18Ø	14x24	14x24	14x24	14x24	14x24	14x24	
COLUMN TYPE	1	1	1	1	1	8	1	1	1	1	1	1	
TIES SPACING "REGION 2"	3 1/4	3 1/4	3 1/4	3 1/4	3 1/4	4 1/2	3 1/4	3 1/4	3 1/4	3 1/4	3 1/4	3 1/4	
TIES SPACING "REGION 1"	6	6	6	6	6	6	6	6	6	6	6	6	
f'c (PSI)	6,000	6,000	6,000	6,000	6,000	6,000	6,000	6,000	6,000	6,000	6,000	6,000	
LEVEL 12	(6) #8	(8) #8	(6) #8	(6) #8	(6) #8	(6) #8	(6) #8	(6) #8	(6) #8	(6) #8	(6) #8	(6) #8	
COLUMN SIZE	14x24	14x24	14x24	14x24	14x24	18Ø	14x24	14x24	14x24	14x24	14x24	14x24	
COLUMN TYPE	1	1	1	1	1	8	1	1	1	1	1	1	
TIES SPACING "REGION 2"	3 1/4	3 1/4	3 1/4	3 1/4	3 1/4	4 1/2	3 1/4	3 1/4	3 1/4	3 1/4	3 1/4	3 1/4	
TIES SPACING "REGION 1"	6	6	6	6	6	6	6	6	6	6	6	6	
f'c (PSI)	6,000	6,000	6,000	6,000	6,000	6,000	6,000	6,000	6,000	6,000	6,000	6,000	
LEVEL 11	(6) #8	(8) #8	(6) #8	(6) #8	(6) #8	(6) #8	(6) #8	(6) #8	(6) #8	(6) #8	(6) #8	(6) #8	
COLUMN SIZE	14x24	14x24	14x24	14x24	14x24	18Ø	14x24	14x24	14x24	14x24	14x24	14x24	
COLUMN TYPE	1	1	1	1	1	8	1	1	1	1	1	1	
TIES SPACING "REGION 2"	3 1/4	3 1/4	3 1/4	3 1/4	3 1/4	4 1/2	3 1/4	3 1/4	3 1/4	3 1/4	3 1/4	3 1/4	
TIES SPACING "REGION 1"	6	6	6	6	6	6	6	6	6	6	6	6	
f'c (PSI)	6,000	6,000	6,000	6,000	6,000	6,000	6,000	6,000	6,000	6,000	6,000	6,000	
LEVEL 10	(6) #8	(6) #8	(6) #8	(6) #8	(6) #8	(6) #8	(6) #8	(6) #8	(6) #8	(6) #8	(6) #8	(6) #8	
COLUMN SIZE	14x24	14x24	14x24	14x24	14x24	18Ø	14x24	14x24	14x24	14x24	14x24	14x24	
COLUMN TYPE	1	1	1	1	1	8	1	1	1	1	1	1	
TIES SPACING "REGION 2"	3 1/4	3 1/4	3 1/4	3 1/4	3 1/4	4 1/2	3 1/4	3 1/4	3 1/4	3 1/4	3 1/4	3 1/4	
TIES SPACING "REGION 1"	6	6	6	6	6	6	6	6	6	6	6	6	
f'c (PSI)	6,000	6,000	6,000	6,000	6,000	6,000	6,000	6,000	6,000	6,000	6,000	6,000	
LEVEL 9	(6) #8	(6) #8	(6) #8	(6) #8	(6) #8	(6) #8	(6) #8	(6) #8	(6) #8	(6) #8	(6) #8	(6) #8	
COLUMN SIZE	14x24	14x24	14x24	14x24	14x24	18Ø	14x24	14x24	14x24	14x24	14x24	14x24	
COLUMN TYPE	1	1	1	1	1	8	1	1	1	1	1	1	
TIES SPACING "REGION 2"	3 1/4	3 1/4	3 1/4	3 1/4	3 1/4	4 1/2	3 1/4	3 1/4	3 1/4	3 1/4	3 1/4	3 1/4	
TIES SPACING "REGION 1"	6	6	6	6	6	6	6	6	6	6	6	6	
f'c (PSI)	6,000	6,000	6,000	6,000	6,000	6,000	6,000	6,000	6,000	6,000	6,000	6,000	
LEVEL 8	(6) #8	(6) #8	(6) #8	(6) #8	(6) #8	(6) #8	(6) #8	(6) #8	(6) #8	(6) #8	(6) #8	(6) #8	
COLUMN SIZE	14x24	14x24	14x24	14x24	14x24	18Ø	14x24	14x24	14x24	14x24	14x24	14x24	
COLUMN TYPE	1	1	1	1	1	8	1	1	1	1	1	1	
TIES SPACING "REGION 2"	3 1/4	3 1/4	3 1/4	3 1/4	3 1/4	4 1/2	3 1/4	3 1/4	3 1/4	3 1/4	3 1/4	3 1/4	
TIES SPACING "REGION 1"	6	6	6	6	6	6	6	6	6	6	6	6	
f'c (PSI)	6,000	6,000	6,000	6,000	6,000	6,000	6,000	6,000	6,000	6,000	6,000	6,000	
LEVEL 7	(6) #8	(8) #8	(6) #8	(6) #8	(6) #8	(6) #8	(6) #8	(6) #8	(10) #8	(6) #8	(10) #8	(8) #8	
COLUMN SIZE	14x24	14x30	14x24	14x28	18Ø	18Ø	14x28	14x30	14x32	14x30	18x32	14x30	
COLUMN TYPE	1	3	1	2	8	8	2	3	4	3	7	3	
TIES SPACING "REGION 2"	3 1/4	3 1/4	3 1/4	3 1/2	4 1/2	4 1/2	3 1/2	3 1/4	3 1/4	3 1/4	4	3 1/4	
TIES SPACING "REGION 1"	6	6	6	6	6	6	6	6	6	6	6	6	
f'c (PSI)	6,000	6,000	6,000	6,000	6,000	6,000	6,000	6,000	6,000	6,000	6,000	6,000	
LEVEL 6	(6) #8	(8) #8	(6) #8	(6) #8	(6) #8	(6) #8	(6) #8	(6) #8	(10) #8	(6) #8	(10) #8	(8) #8	
COLUMN SIZE	14x24	14x30	14x24	14x28	18Ø	18Ø	14x28	14x30	14x32	14x30	18x32	14x30	
COLUMN TYPE	1	3	1	2	8	8	2	3	4	3	7	3	
TIES SPACING "REGION 2"	3 1/4	3 1/4	3 1/4	3 1/2	4 1/2	4 1/2	3 1/2	3 1/4	3 1/4	3 1/4	4	3 1/4	
TIES SPACING "REGION 1"	6	6	6	6	6	6	6	6	6	6	6	6	
f'c (PSI)	6,000	6,000	6,000	6,000	6,000	6,000	6,000	6,000	6,000	6,000	6,000	6,000	
LEVEL 5	(6) #8	(8) #8	(6) #8	(6) #8	(6) #8	(6) #8	(6) #8	(6) #8	(10) #8	(6) #8	(10) #8	(8) #8	
COLUMN SIZE	14x24	14x30	14x24	14x28	18Ø	18Ø	14x28	14x30	14x32	14x30	18x32	14x30	
COLUMN TYPE	1	3	1	2	8	8	2	3	4	3	7	3	
TIES SPACING "REGION 2"	3 1/4	3 1/4	3 1/4	3 1/2	4 1/2	4 1/2	3 1/2	3 1/4	3 1/4	3 1/4	4	3 1/4	
TIES SPACING "REGION 1"	6	6	6	6	6	6	6	6	6	6	6	6	
f'c (PSI)	6,000	6,000	6,000	6,000	6,000	6,000	6,000	6,000	6,000	6,000	6,000	6,000	
LEVEL 4	(6) #8	(8) #8	(6) #8	(6) #8	(6) #8	(6) #8	(6) #8	(6) #8	(10) #8	(6) #8	(10) #8	(8) #8	
COLUMN SIZE	14x24	14x30	14x24	14x24	14x28	18Ø	14x28	14x30	14x32	14x30	18x32	14x30	
COLUMN TYPE	1	3	1	1	2	8	2	3	4	3	7	3	
TIES SPACING "REGION 2"	3 1/4	3 1/4	3 1/4	3 1/4	3 1/2	4 1/2	3 1/2	3 1/4	3 1/4	3 1/4	4	3 1/4	
TIES SPACING "REGION 1"	6	6	6	6	6	6	6	6	6	6	6	6	
f'c (PSI)	6,000	6,000	6,000	6,000	6,000	6,000	6,000	6,000	6,000	6,000	6,000	6,000	
LEVEL 3	(6) #8	(8) #8	(6) #8	(6) #8	(6) #8	(6) #8	(6) #8	(6) #8	(10) #8	(6) #8	(10) #8	(8) #8	
COLUMN SIZE	14x24	14x30	14x24	14x24	14x28	18Ø	14x28	14x30	14x32	14x30	18x32	14x30	
COLUMN TYPE	1	3	1	1	2	8	2	3	4	3	7	3	
TIES SPACING "REGION 2"	3 1/4	3 1/4	3 1/4	3 1/4	3 1/2	4 1/2	3 1/2	3 1/4	3 1/4	3 1/4	4	3 1/4	
TIES SPACING "REGION 1"	6	6	6	6	6	6	6	6	6	6	6	6	
f'c (PSI)	6,000	6,000	6,000	6,000	6,000	6,000	6,000	6,000	6,000	6,000	6,000	6,000	
LEVEL 2	(8) #8	(10) #8	(6) #8	(10) #10	(10) #8	(8) #8	(8) #8	(12) #8	(12) #8	(12) #8	(14) #8	(10) #8	
COLUMN SIZE	14x24	14x30	18Ø	22Ø	14x28	20Ø	24Ø	26Ø	26Ø	16x30	28Ø	14x34	
COLUMN TYPE	1	18x24 @ SIM 3/7@SIM	8	10	2	9	11	12	12	6	13	5	
TIES SPACING "REGION 2"	3 1/4	3 1/4	4 1/2	5 1/4	3 1/2	5	4 3/4	4 1/2	4 1/2	4	4	3	
TIES SPACING "REGION 1"	6	6	6	6	6	6	6	6	6	6	6	6	
f'c (PSI)	6,000	6,000	6,000	6,000	6,000	6,000	6,000	6,000	6,000	6,000	6,000	6,000	
GROUND	(8) #8	(10) #8	(8) #8	(10) #10	(10) #8	(8) #8	(12) #8	(12) #8	(12) #8	(12) #8	(14) #8	(10) #8	
COLUMN SIZE												14x14 1 SIM.	
COLUMN TYPE												6	
TIES SPACING "REGION 2"												6	
TIES SPACING "REGION 1"												6,000	
f'c (PSI)												(4) #8	
BASEMENT												(4) #8	

SPLICE ALLOWED AT TOP OF FND. AT CONTRACTOR'S OPTION THIS COLUMN ONLY

1 CONCRETE COLUMN SCHEDULE

1" = 1'-0"

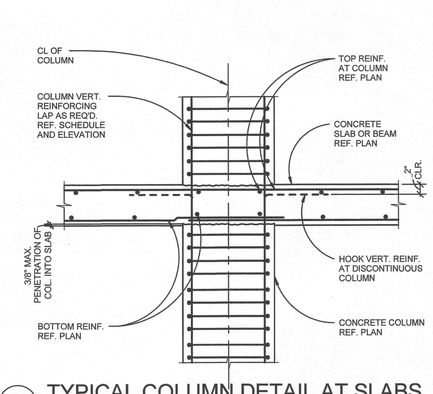

4 TYPICAL COLUMN DETAIL AT SLABS

1" = 1'-0"

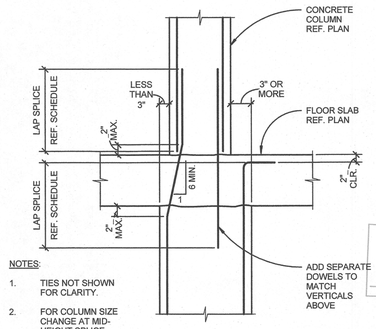

NOTES:

1. TIES NOT SHOWN FOR CLARITY.
2. FOR COLUMN SIZE CHANGE AT MID-HEIGHT SPLICE REF. S/S401.

3 COLUMN SIZE CHANGE AT BASE SPLICE LOCATIONS

1" = 1'-0"

City of Portland REVIEWED FOR CODE COMPLIANCE DEC 22 2017 Permit Number
RECEIVED SEP 06 2017 BDS DOCUMENT SERVICES

LRS ARCHITECTS
720 NW Davis 503.221.1121
Suite 300 503.221.2077
Portland OR 97209 www.lrsarchitects.com

STRUCTURAL REGISTERED PROFESSIONAL ENGINEER 79478PE OREGON JULY 15, 2005 JUDITHA P. RICHARDS
EXPIRES 12-31-18

LEVERARCHITECTURE
4713 N ALBINA AVE, PDX OR 97217
T 503 928 6040
www.leverarchitecture.com

CONSULTANT:

kpff
111 SW Fifth Ave., Suite 2500
Portland, OR 97204
O: 503.227.3251
F: 503.227.7980
www.kpff.com

PROJECT NUMBER: *1600385-R17*

GRAND AVENUE APARTMENTS

1010 NE GRAND AVE. PORTLAND, OR 97232

SHEET TITLE:

CONCRETE COLUMN SCHEDULE AND DETAILS

DRAWN BY: *BJS*
DATE CREATED: *08-10-2017*

A	Plan Check Review	09.01.2017

SHEET:

S401

ADDENDUM #1
08-10-2017

LRS Architects, Inc. ©2017

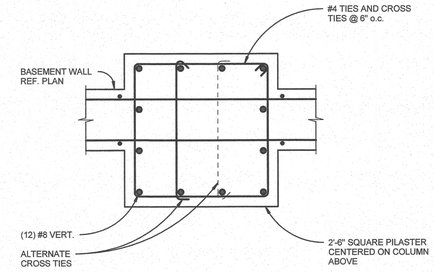

1 PILASTER AT BASEMENT WALL
1" = 1'-0"

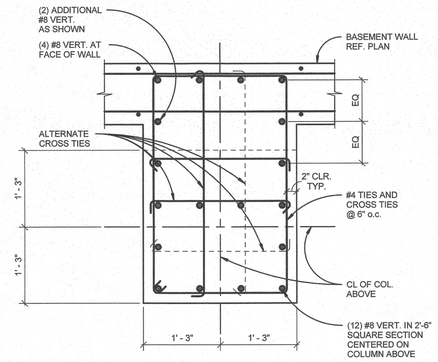

2 PILASTER AT BASEMENT WALL
1" = 1'-0"

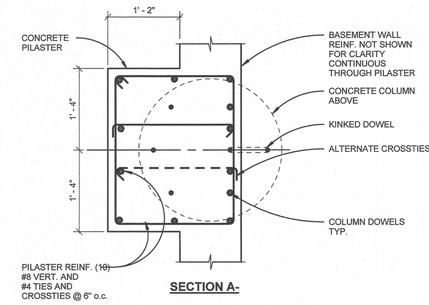

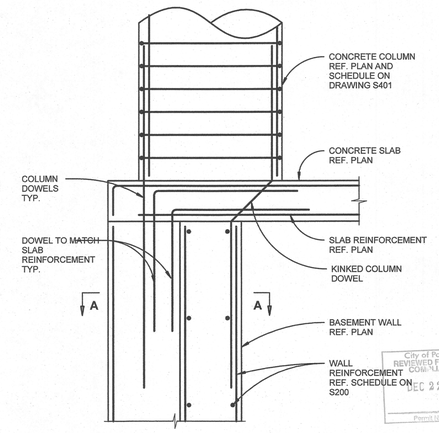

3 PILASTER AT AT GRID 2.6
1" = 1'-0"

LRS ARCHITECTS
720 NW Davis 503.221.1121
Suite 300 503.221.2077
Portland OR 97209 www.lrsarchitects.com

REGISTERED PROFESSIONAL ENGINEER
OREGON
DEC 31, 2001
JOSHUA P. RICHARDS
EXPIRES 12-31-18

LEVERARCHITECTURE
4713 N ALBINA AVE, PDX OR 97217
T 503 928 6040
www.leverarchitecture.com

CONSULTANT:

kpff
111 SW Fifth Ave., Suite 2500
Portland, OR 97204
O: 503.227.3251
F: 503.227.7980
www.kpff.com

PROJECT NUMBER: 1600385-R17

GRAND AVENUE APARTMENTS

1010 NE GRAND AVE. PORTLAND, OR 97232

SHEET TITLE:
PILASTER DETAILS

DRAWN BY: BJS
DATE CREATED: 07-14-2017

SHEET:
S402
PERMIT SET
07-14-2017

LRS Architects, Inc. ©2017

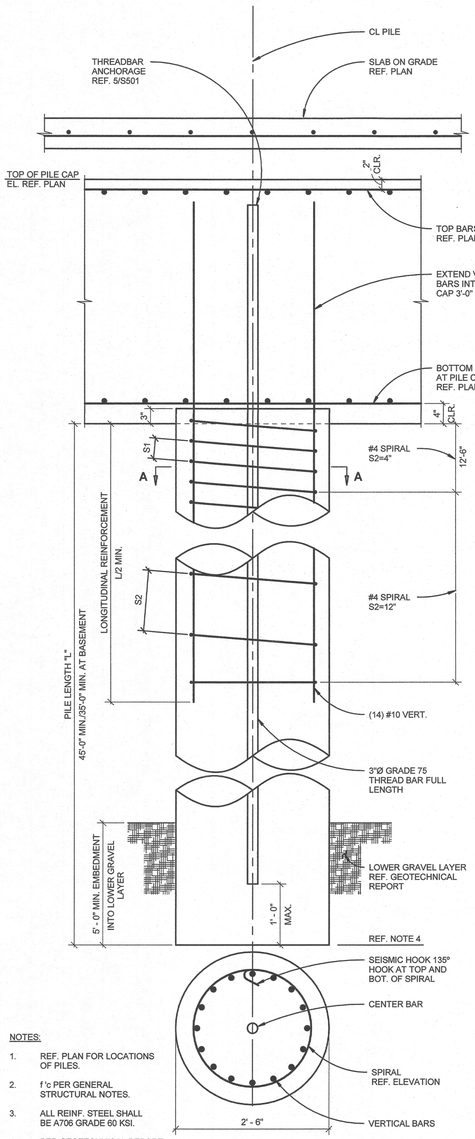

NOTES:

1. REF. PLAN FOR LOCATIONS OF PILES.
2. f'c PER GENERAL STRUCTURAL NOTES.
3. ALL REINF. STEEL SHALL BE A706 GRADE 60 KSI.
4. PER GEOTECHNICAL REPORT THE ESTIMATED ELEVATION OF THE LOWER GRAVEL LAYER IS APPROXIMATELY 55'-0" RELATIVE TO CITY OF PORTLAND DATUM ELEVATION.
5. ✳ BUILDING ELEVATION 0'-0" = 125'-10" RELATIVE CITY OF PORTLAND DATUM ELEVATION.

SECTION A-A

4 AUGER-CAST PILE P4

1" = 1'-0"

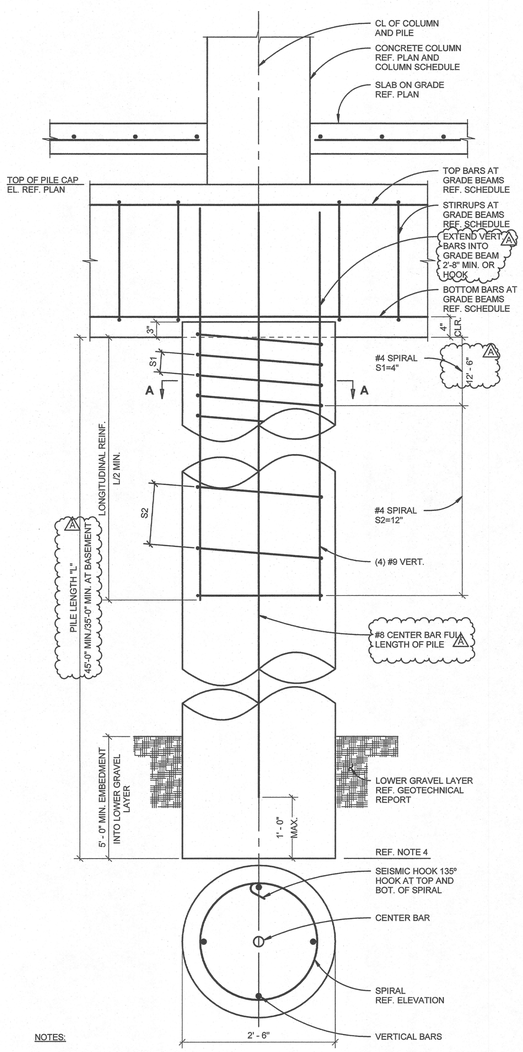

NOTES:

1. REF. PLAN FOR LOCATIONS OF PILES.
2. f'c PER GENERAL STRUCTURAL NOTES
3. ALL REINF. STEEL SHALL BE A706 GRADE 60 KSI.
4. PER GEOTECHNICAL REPORT THE ESTIMATED ELEVATION OF THE LOWER GRAVEL LAYER IS APPROXIMATELY 55'-0" RELATIVE TO CITY OF PORTLAND DATUM ELEVATION.
5. ✳ BUILDING ELEVATION 0'-0" = 125'-10" RELATIVE CITY OF PORTLAND DATUM ELEVATION.

SECTION A-A

3 AUGER-CAST PILE P3

1" = 1'-0"

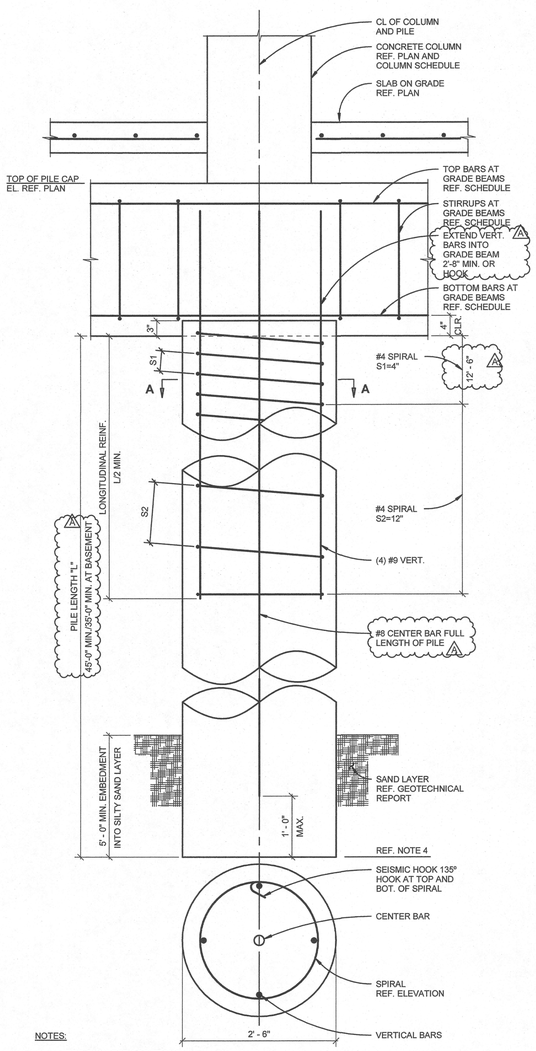

NOTES:

1. REF. PLAN FOR LOCATIONS OF PILES.
2. f'c PER GENERAL STRUCTURAL NOTES
3. ALL REINF. STEEL SHALL BE A706 GRADE 60 KSI.
4. PER GEOTECHNICAL REPORT THE ESTIMATED ELEVATION OF THE SAND LAYER IS APPROXIMATELY 74'-0" RELATIVE TO CITY OF PORTLAND DATUM ELEVATION.
5. ✳ BUILDING ELEVATION 0'-0" = 125'-10" RELATIVE CITY OF PORTLAND DATUM ELEVATION.

SECTION A-A

2 AUGER-CAST PILE P2

1" = 1'-0"

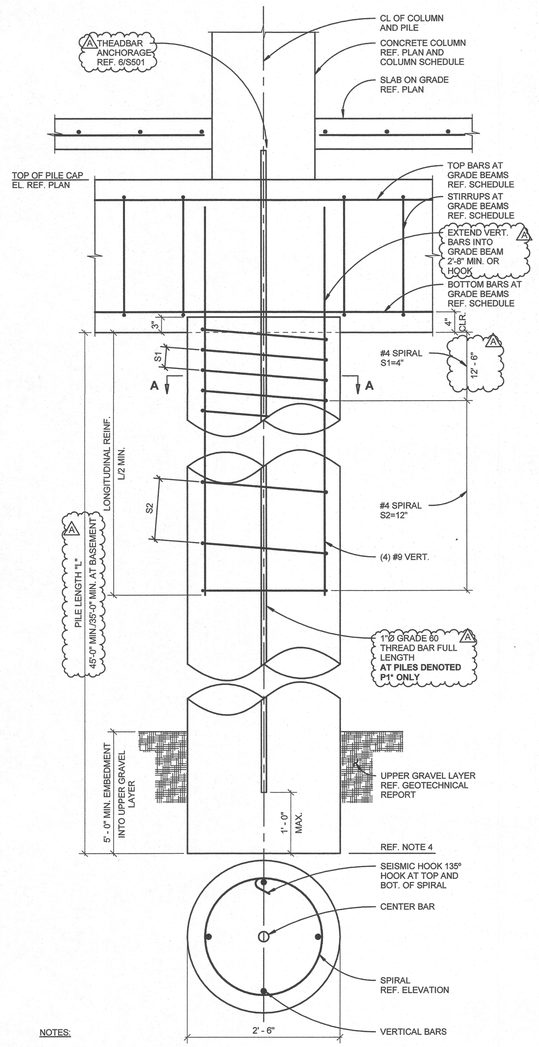

NOTES:

1. REF. PLAN FOR LOCATIONS OF PILES.
2. f'c PER GENERAL STRUCTURAL NOTES
3. ALL REINF. STEEL SHALL BE A706 GRADE 60 KSI.
4. PER GEOTECHNICAL REPORT THE ESTIMATED ELEVATION OF THE UPPER GRAVEL LAYER IS APPROXIMATELY 84'-0" RELATIVE TO CITY OF PORTLAND DATUM ELEVATION.
5. ✳ BUILDING ELEVATION 0'-0" = 125'-10" RELATIVE CITY OF PORTLAND DATUM ELEVATION.

SECTION A-A

1 AUGER-CAST PILE P1

1" = 1'-0"

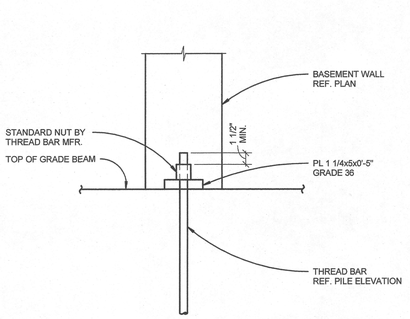

6 THREAD BAR ANCHORAGE AT GRADE BEAM

1 1/2" = 1'-0"

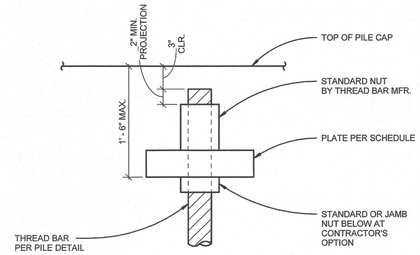

THREAD BAR	STEEL PLATE	STEEL GRADE
3"Ø GR. 150	3 1/2"x14"x1'-2"	A572 GRADE 50
3"Ø GR. 75	2 3/4"x12"x1'-0"	A36

5 THREAD BAR ANCHORAGE IN PILE CAP

1 1/2" = 1'-0"

LRS ARCHITECTS
720 NW Davis 503.221.1121
Suite 300 503.221.2077
Portland OR 97209 www.lrsarchitects.com

STRUCTURAL REGISTERED PROFESSIONAL ENGINEER 79478PE OREGON JULY 13, 2005 JOANNA P. RICHARDS EXPIRES: 12-31-18

LEVERARCHITECTURE
4713 N ALBINA AVE, PDX OR 97217
T 503 928 6040
www.leverarchitecture.com

CONSULTANT:

kpff
111 SW Fifth Ave., Suite 2500
Portland, OR 97204
O: 503.227.3251
F: 503.227.7980
www.kpff.com

PROJECT NUMBER: *1600385-R17*

GRAND AVENUE APARTMENTS

1010 NE GRAND AVE. PORTLAND, OR 97232

SHEET TITLE:

AUGER-CAST PILE DETAILS

DRAWN BY:		*BJS*
DATE CREATED:		*08-10-2017*
A	Plan Check Review	09.01.2017

City of Portland REVIEWED FOR CODE COMPLIANCE DEC 22 2017 Permit Number

RECEIVED SEP 06 2017 BDS DOCUMENT SERVICES

SHEET:

S501

ADDENDUM #1 08-10-2017

LRS Architects, Inc. ©2017

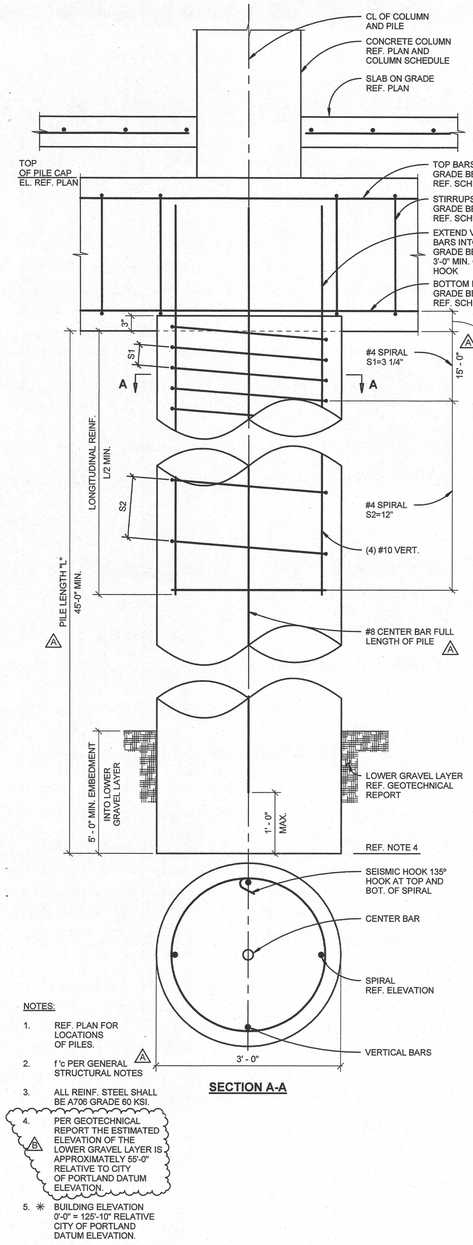

NOTES:

1. REF. PLAN FOR LOCATIONS OF PILES.
2. f'c PER GENERAL STRUCTURAL NOTES
3. ALL REINF. STEEL SHALL BE A706 GRADE 60 KSI.
4. PER GEOTECHNICAL REPORT THE ESTIMATED ELEVATION OF THE LOWER GRAVEL LAYER IS APPROXIMATELY 55'-0" RELATIVE TO CITY OF PORTLAND DATUM ELEVATION.
5. ✳ BUILDING ELEVATION 0'-0" = 125'-10" RELATIVE CITY OF PORTLAND DATUM ELEVATION.

SECTION A-A

8 AUGER-CAST PILE P5

1" = 1'-0"

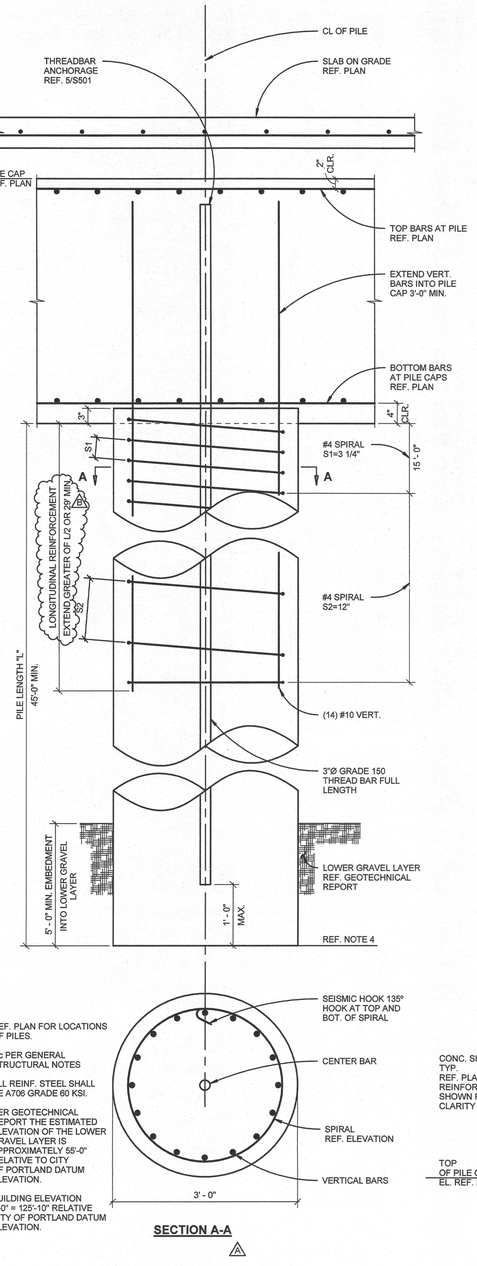

NOTES:

1. REF. PLAN FOR LOCATIONS OF PILES.
2. f'c PER GENERAL STRUCTURAL NOTES
3. ALL REINF. STEEL SHALL BE A706 GRADE 60 KSI.
4. PER GEOTECHNICAL REPORT THE ESTIMATED ELEVATION OF THE LOWER GRAVEL LAYER IS APPROXIMATELY 55'-0" RELATIVE TO CITY OF PORTLAND DATUM ELEVATION.
5. ✳ BUILDING ELEVATION 0'-0" = 125'-10" RELATIVE CITY OF PORTLAND DATUM ELEVATION.

SECTION A-A

7 AUGER-CAST PILE P6

1" = 1'-0"

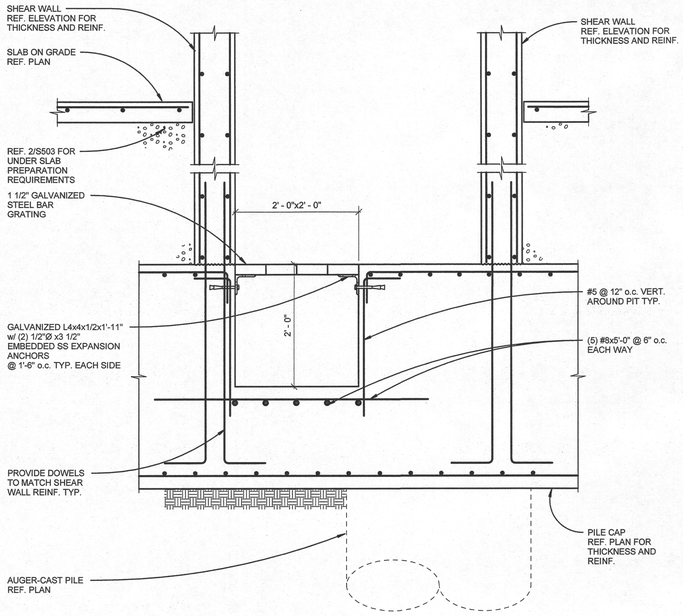

5 ELEVATOR PIT SECTION

1" = 1'-0"

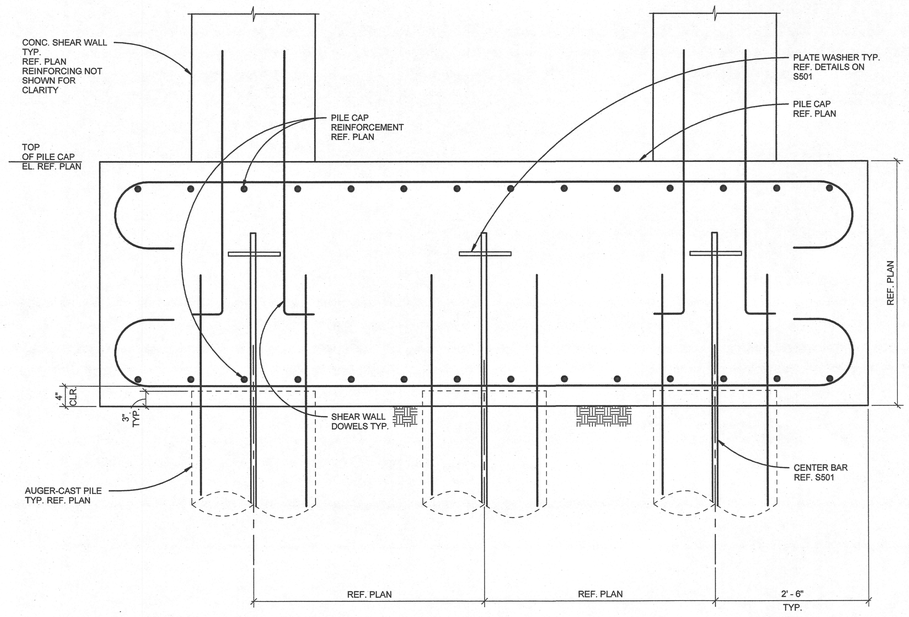

6 SHEAR WALL PILE CAP

1" = 1'-0"

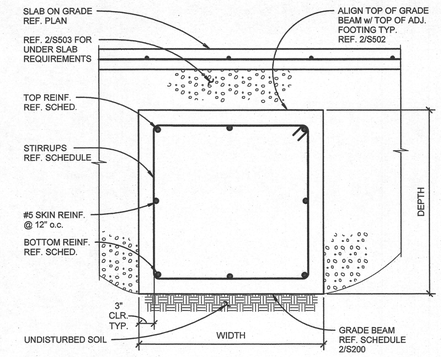

1 TYP. GRADE BEAM DETAIL

1" = 1'-0"

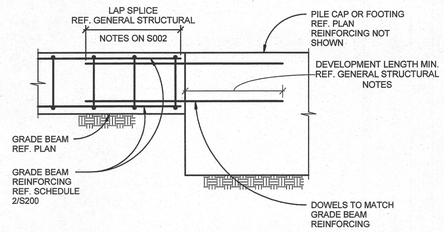

2 GRADE BEAM AT FOOTING

1" = 1'-0"

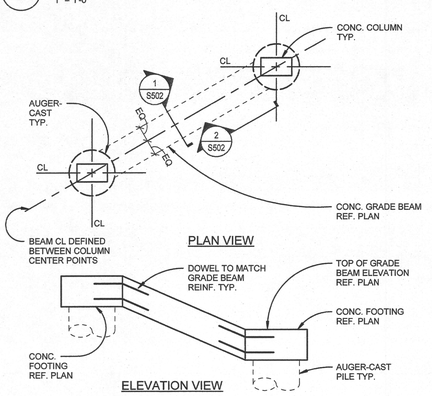

3 GRADE BEAM LOCATION DETAIL

1/4" = 1'-0"

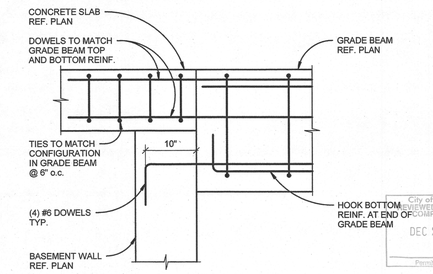

4 GRADE BEAM AT BASEMENT

1" = 1'-0"

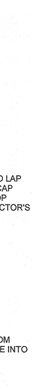

9 PILE CAP EXTENSION AT TANK WALL

1" = 1'-0"

LRS ARCHITECTS
720 NW Davis 503.221.1121
Suite 300 503.221.2077
Portland OR 97209 www.lrsarchitects.com

STRUCTURAL REGISTERED PROFESSIONAL ENGINEER 79476PE OREGON MAR. 11 1992 JOSHUA P. RICHARDS EXPIRES 12-31-18

LEVERARCHITECTURE
4713 N ALBINA AVE, PDX OR 97217
T 503 928 6040
www.leverarchitecture.com

CONSULTANT:

kpff
111 SW Fifth Ave., Suite 2500
Portland, OR 97204
O: 503.227.3251
F: 503.227.7980
www.kpff.com

PROJECT NUMBER: 1600385-R17

GRAND AVENUE APARTMENTS

1010 NE GRAND AVE. PORTLAND, OR 97232

SHEET TITLE:

AUGER-CAST PILE, GRADE BEAM AND PILE CAP DETAILS

DRAWN BY:		BJS
DATE CREATED:		08-10-2017
A	Plan Check Review	09.01.2017
B	Plan Check #02	09.22.2017

City of Portland REVIEWED FOR CODE COMPLIANCE DEC 22 2017 Permit Number

RECEIVED OCT 10 2017 BDS DOCUMENT SERVICES

SHEET: **S502**

ADDENDUM #1 08-10-2017

LRS Architects, Inc. ©2017

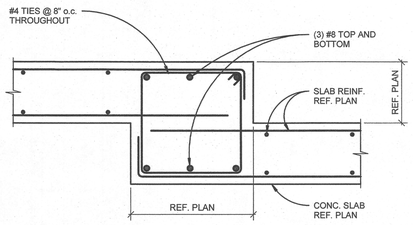

17 SECTION AT ELEVATED SLAB STEP
1" = 1'-0"

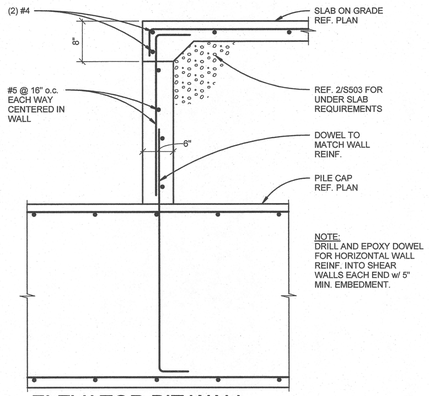

13 ELEVATOR PIT WALL
1" = 1'-0"

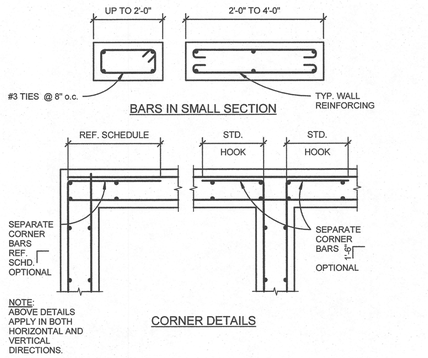

9 WALL DETAILS - DOUBLE LAYER REINFORCING
1" = 1'-0"

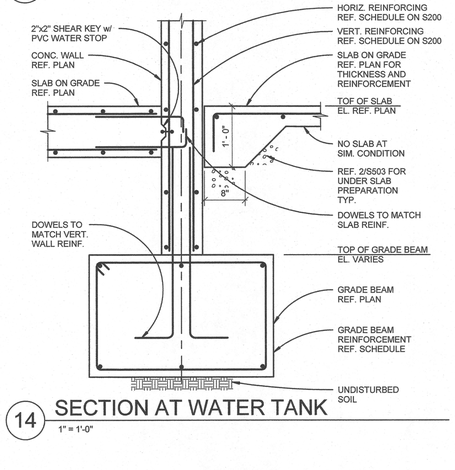

14 SECTION AT WATER TANK
1" = 1'-0"

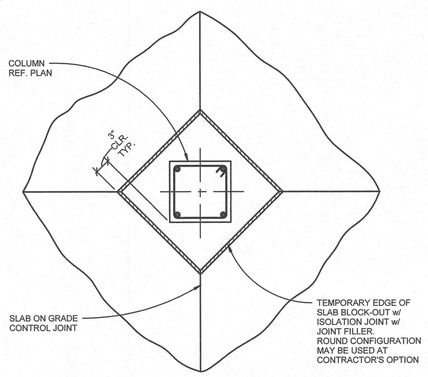

10 ISOLATION JOINT AT COLUMN
1" = 1'-0"

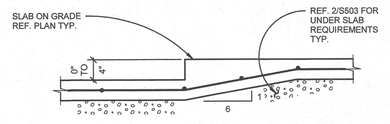

TYPICAL STEP IN SLAB ON GRADE DETAILS
1" = 1'-0"

5

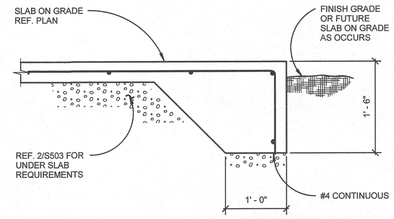

THICKENED SLAB ON GRADE EDGE DETAIL
1" = 1'-0"

6

THICKENED SLAB AT STAIR STRINGER
1" = 1'-0"

7

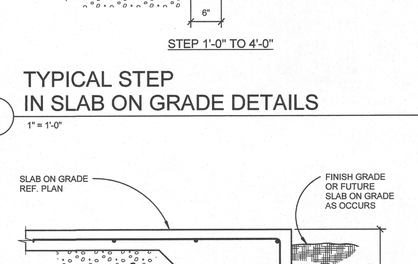

HOUSEKEEPING PAD AT SLAB ON GRADE
1" = 1'-0"

8

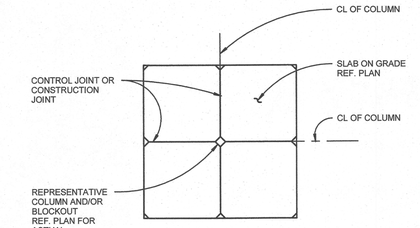

1 JOINTS AT SLAB ON GRADE
1" = 1'-0"

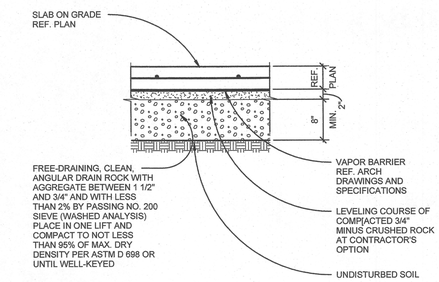

UNDER SLAB PREPARATION AT SLAB ON GRADE
1" = 1'-0"

2

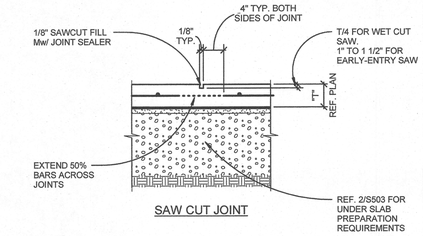

CONTROL JOINTS IN SLAB ON GRADE
1" = 1'-0"

3

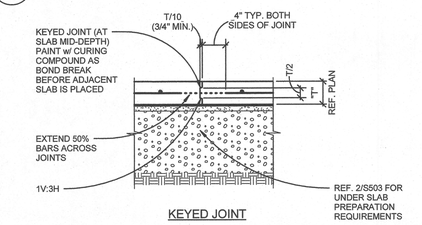

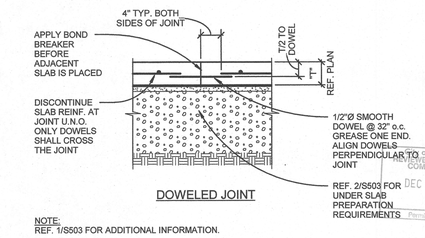

CONSTRUCTION JOINTS AT SLAB ON GRADE
1" = 1'-0"

4

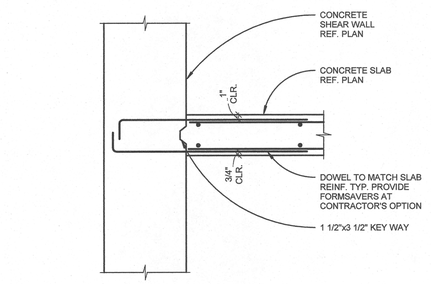

15 SLAB AT SHEAR WALL
1" = 1'-0"

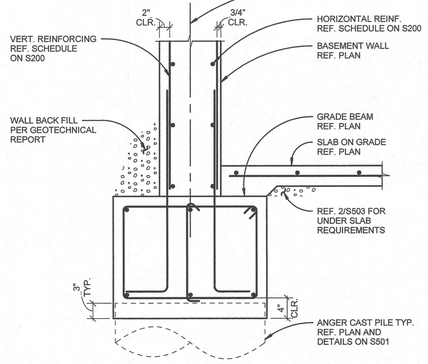

11 BASEMENT WALL AT GRADE BEAM
1" = 1'-0"

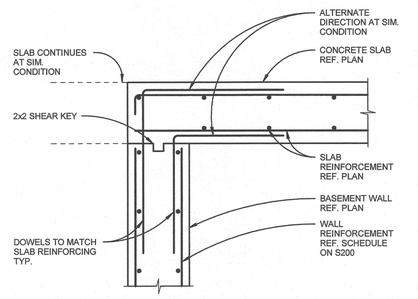

16 SECTION AT TOP OF BASEMENT WALL
1" = 1'-0"

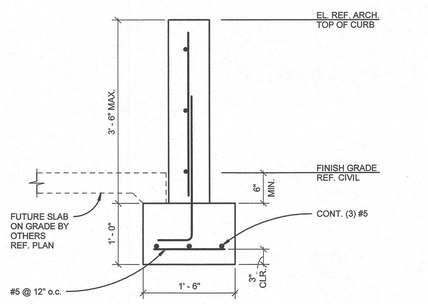

12 SECTION AT FUTURE SLAB ON GRADE
1" = 1'-0"

LRS ARCHITECTS
720 NW Davis 503.221.1121
Suite 300 503.221.2077
Portland OR 97209 www.lrsarchitects.com

STRUCTURAL REGISTERED PROFESSIONAL ENGINEER 79476PE OREGON RENEWS: 06/30/2019 JOSHUA P. RICHARDS
EXPIRES 12-31-18

LEVERARCHITECTURE
4713 N ALBINA AVE, PDX OR 97217
T 503 928 6040
www.leverarchitecture.com

CONSULTANT:

kpff
111 SW Fifth Ave., Suite 2500
Portland, OR 97204
O: 503.227.3251
F: 503.227.7980
www.kpff.com

PROJECT NUMBER: *1600385-R17*

GRAND AVENUE APARTMENTS

1010 NE GRAND AVE. PORTLAND, OR 97232

SHEET TITLE:
CONCRETE DETAILS

DRAWN BY:		*BJS*
DATE CREATED:		*08-10-2017*
1	Addendum #01	08.11.2017

RECEIVED
SEP 06 2017
BDS
DOCUMENT SERVICES

City of Portland
REVIEWED FOR CODE COMPLIANCE
DEC 22 2017
Permit Number

SHEET:
S503
ADDENDUM #1
08-10-2017

LRS Architects, Inc. ©2017

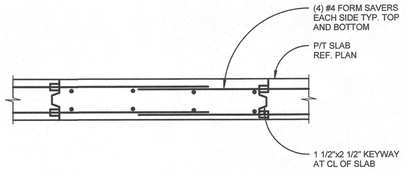

5 PLACING BOOM SLAB INFILL
1" = 1'-0"

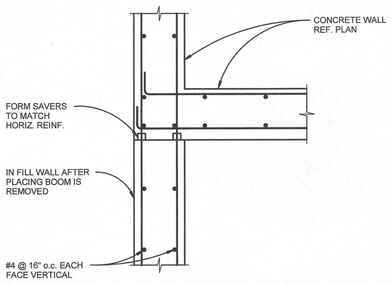

6 WALL INFILL AT PLACING BOOM
1" = 1'-0"

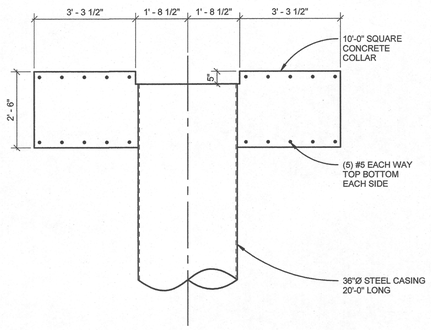

7 PLACING BOOM BASE
1/2" = 1'-0"

NOTES:

1. MIN. W=4"
2. MAX. H=30" AT W=5" MAX. H=36" AT W=6" MAX. H=42" AT W>7"
3. CONTRACTOR'S OPTION TO CAST HOOKED DOWELS w/ 6" EMBED IN LIEU OF EPOXY DOWELS. DO NOT DAMAGE P/T OR REINF.
4. AT CONC. SLAB OVER METAL DECK, LOCATE DOWELS IN LOW FLUTES.

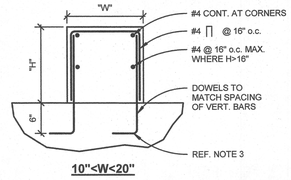

10"<W<20"

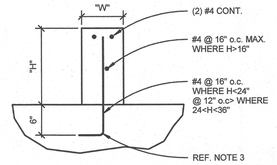

W<10"

1 TYP. CONC. CURB
1" = 1'-0"

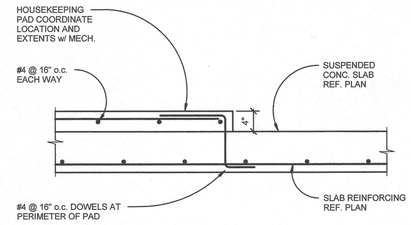

NOTES:

1. FOR HOUSEKEEPING PADS THICKER THAN 8" REF. 5/S504.
2. AT CONTRACTOR'S OPTION DRILL AND EPOXY w/ 4" EMBEDMENT IN LIEU OF DOWELS.
3. DO NOT DAMAGE P/T OR REINFORCING.

2 HOUSEKEEPING PAD AT SUSPENDED CONCRETE SLAB
1" = 1'-0"

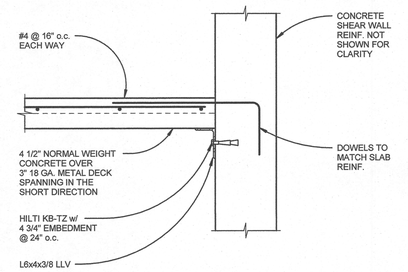

3 SECTION AT STAIR ENCLOSURE
1" = 1'-0"

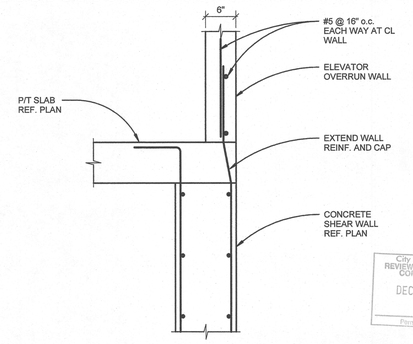

4 ELEVATOR OVERRUN
1" = 1'-0"

LRS ARCHITECTS
720 NW Davis 503.221.1121
Suite 300 503.221.2077
Portland OR 97209 www.lrsarchitects.com

STRUCTURAL REGISTERED PROFESSIONAL ENGINEER 79479PE OREGON JULY 15, 1982 VIRGINIA P. RICHARDS
EXPIRES 12-31-18

LEVERARCHITECTURE
4713 N ALBINA AVE, PDX OR 97217
T 503 928 6040
www.leverarchitecture.com

CONSULTANT:

kpff
111 SW Fifth Ave., Suite 2500
Portland, OR 97204
O: 503.227.3251
F: 503.227.7980
www.kpff.com

PROJECT NUMBER: *1600385-R17*

GRAND AVENUE APARTMENTS

1010 NE GRAND AVE. PORTLAND, OR 97232

SHEET TITLE:

CONCRETE DETAILS

DRAWN BY: *BJS*
DATE CREATED: *08-10-2017*

A	Plan Check Review	09.01.2017

City of Portland REVIEWED FOR CODE COMPLIANCE DEC 22 2017 Permit Number

RECEIVED SEP 06 2017 BDS DOCUMENT SERVICES

SHEET:

S504

ADDENDUM #1 08-10-2017

LRS Architects, Inc. ©2017

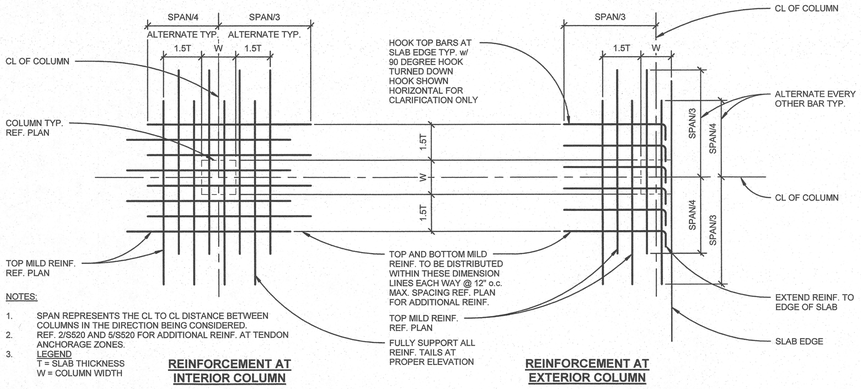

NOTES:

1. SPAN REPRESENTS THE CL TO CL DISTANCE BETWEEN COLUMNS IN THE DIRECTION BEING CONSIDERED.
2. REF. 2/S520 AND 5/S520 FOR ADDITIONAL REINF. AT TENDON ANCHORAGE ZONES.
3. LEGEND
   T = SLAB THICKNESS
   W = COLUMN WIDTH

REINFORCEMENT AT INTERIOR COLUMN

REINFORCEMENT AT EXTERIOR COLUMN

10 TYPICAL REINFORCING LAYOUT AT COLUMN DETAIL

1" = 1'-0"

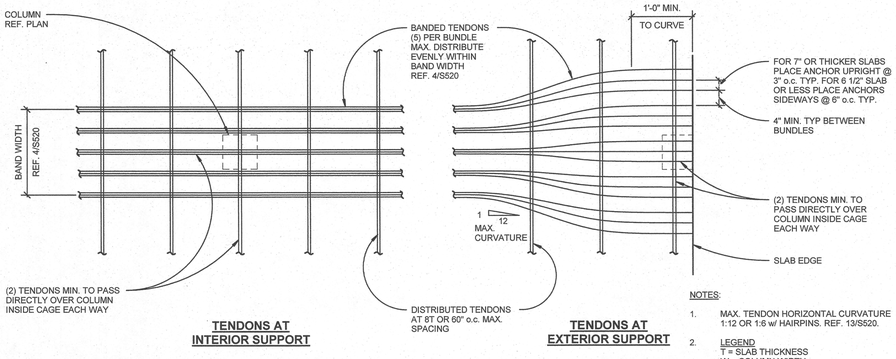

TENDONS AT INTERIOR SUPPORT

TENDONS AT EXTERIOR SUPPORT

NOTES:

1. MAX. TENDON HORIZONTAL CURVATURE 1:12 OR 1:6 w/ HAIRPINS. REF. 13/S520.
2. LEGEND
   T = SLAB THICKNESS
   W = COLUMN WIDTH

11 TYPICAL BANDED TENDON LAYOUT AT COLUMN DETAIL

1" = 1'-0"

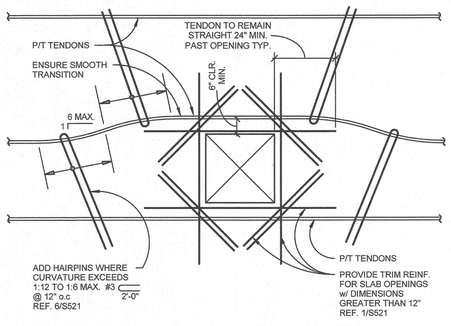

NOTE:
REF. 2/S521 FOR REQUIREMENTS AT MULTIPLE OPENINGS.

14 TYPICAL TENDON LAYOUT AT BLOCK OUTS

1" = 1'-0"

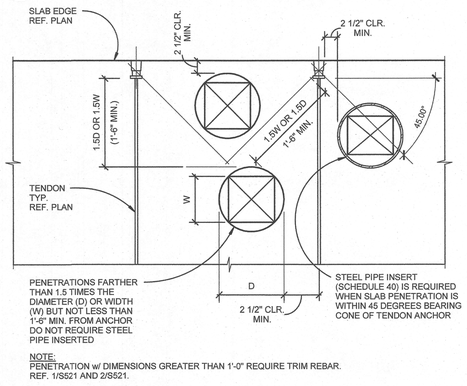

NOTE:
PENETRATION w/ DIMENSIONS GREATER THAN 1'-0" REQUIRE TRIM REBAR.
REF. 1/S521 AND 2/S521.

15 OPENING AT P/T ANCHORAGE

1" = 1'-0"

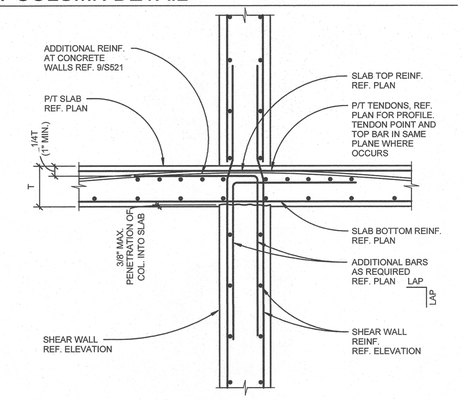

12 SECTION AT SHEAR WALL

1" = 1'-0"

NOTE:
1. DETAIL APPLIES WHERE TENDON SWEEP IS GREATER THAN 1:12.
2. KEEP TENDONS MIN. 2" APART AT TURN.
3. PLACE HAIRPIN AROUND EACH BUNDLE AS SHOWN.

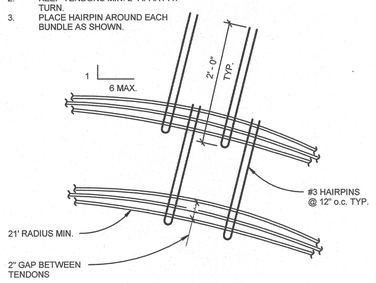

13 TENDON PLACEMENT FOR SWEEPS >1:12

1" = 1'-0"

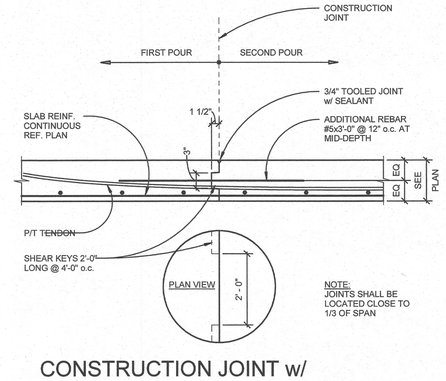

NOTE:
JOINTS SHALL BE LOCATED CLOSE TO 1/3 OF SPAN

CONSTRUCTION JOINT w/ NO INTERMEDIATE STRESSING

1" = 1'-0"

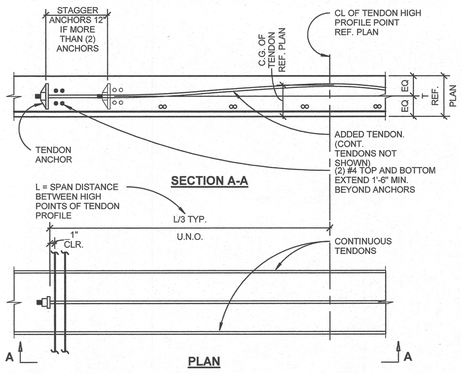

8 TYPICAL ADDED TENDONS

1" = 1'-0"

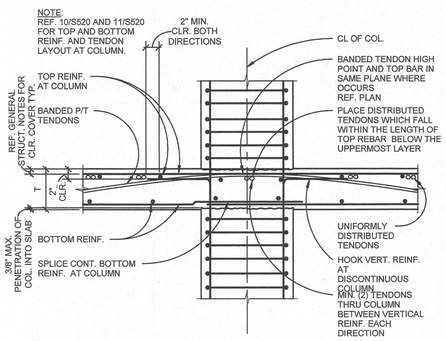

9 TYPICAL LAYOUT OF TENDONS AND REINFORCING AT COLUMN

1" = 1'-0"

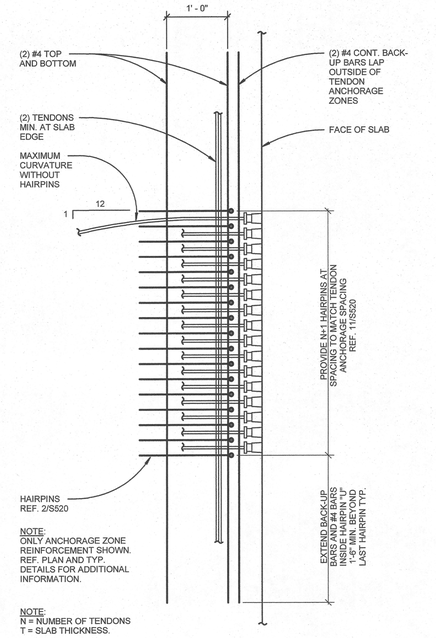

NOTE:
ONLY ANCHORAGE ZONE REINFORCEMENT SHOWN. REF. PLAN AND TYP. DETAILS FOR ADDITIONAL INFORMATION.

NOTE:
N = NUMBER OF TENDONS
T = SLAB THICKNESS.

5 TYPICAL TENDON ANCHORAGE PLAN AT BANDED TENDONS

1" = 1'-0"

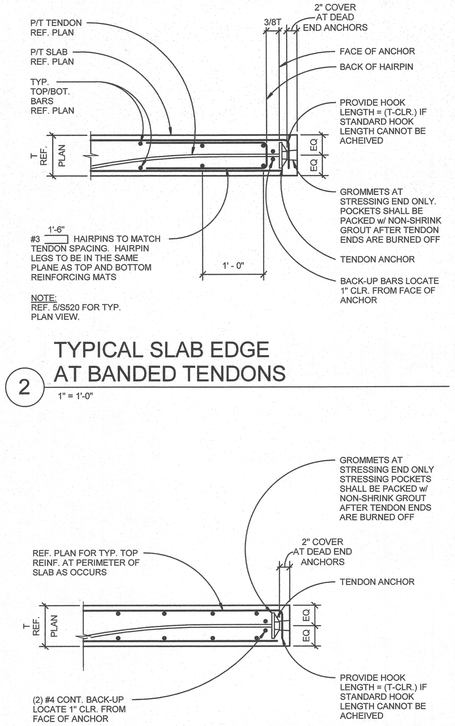

NOTE:
SHORE FIRST SLAB UNTIL SECOND SLAB IS STRESSED.

6 TYPICAL CONSTRUCTION JOINT w/ INTERMEDIATE STRESSING ANCHOR

1" = 1'-0"

NOTE:
REF. 5/S520 FOR TYP. PLAN VIEW.

2 TYPICAL SLAB EDGE AT BANDED TENDONS

1" = 1'-0"

3 TYPICAL SLAB EDGE AT DISTRIBUTED TENDONS

1" = 1'-0"

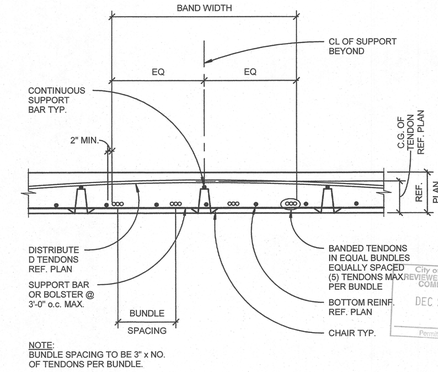

NOTE:
BUNDLE SPACING TO BE 3" x NO. OF TENDONS PER BUNDLE.

4 TYPICAL BANDED TENDONS

1" = 1'-0"

LRS ARCHITECTS
720 NW Davis 503.221.1121
Suite 300 503.221.2077
Portland OR 97209 www.lrsarchitects.com

STRUCTURAL ENGINEERED PROFESSIONAL ENGINEER 79478PE OREGON JUNE 11, 2004 JOSHUA P. RICHARDS EXPIRES 12-31-18

LEVERARCHITECTURE
4713 N ALBINA AVE, PDX OR 97217
T 503 928 6040
www.leverarchitecture.com

CONSULTANT:

kpff
111 SW Fifth Ave., Suite 2500
Portland, OR 97204
O: 503.227.3251
F: 503.227.7980
www.kpff.com

PROJECT NUMBER: 1600385-R17

GRAND AVENUE APARTMENTS

1010 NE GRAND AVE. PORTLAND, OR 97232

SHEET TITLE:
POST TENSIONING DETAILS

DRAWN BY: BJS
DATE CREATED: 07-14-2017

City of Portland REVIEWED FOR CODE COMPLIANCE DEC 22 2017 Permit Number

SHEET:
S520
PERMIT SET 07-14-2017

LRS Architects, Inc. ©2017

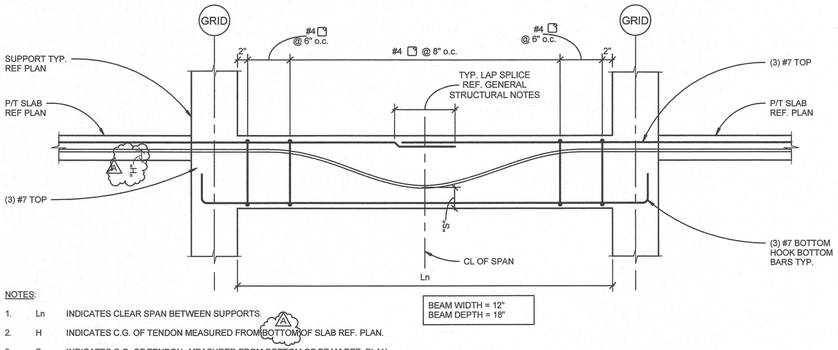

NOTES:

1. Ln INDICATES CLEAR SPAN BETWEEN SUPPORTS.
2. H INDICATES C.G. OF TENDON MEASURED FROM BOTTOM OF SLAB REF. PLAN.
3. S INDICATES C.G. OF TENDON MEASURED FROM BOTTOM OF BEAM REF. PLAN.
4. EXTEND TOP REINF. INTO SLAB FOR GREATER OF SLAB L/3 OR 3'-0".

13 P/T BEAM ELEVATION - ONE SPAN
1" = 1'-0"

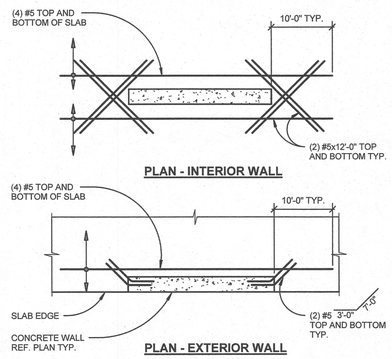

9 ADD'L. REINFORCEMENT AT CONCRETE WALLS
1" = 1'-0"

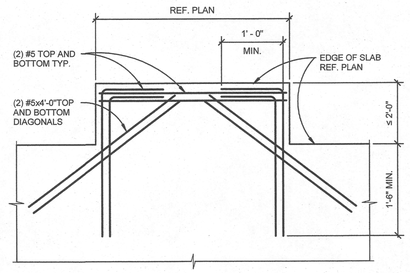

5 TRIM BARS AT CANTILEVERED SLAB
1" = 1'-0"

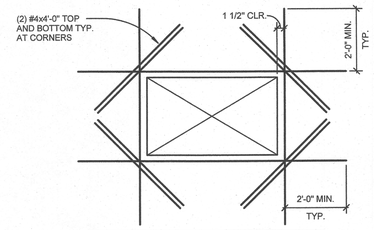

MAX. DIMENSION	REINFORCING
1'-0" TO 1'-6"	(2) #4 EACH SIDE AT CL OF SLAB
1'-6" TO 2'-0"	(2) #4 TOP AND BOT. EACH SIDE

NOTES:

1. ALL OPENINGS LARGER THAN 1'-0" SHALL BE TRIMMED AS SHOWN.
2. THESE BARS ARE IN ADDITION TO REBAR SHOWN ON PLANS.
3. REF. 2/S521 FOR MULTIPLE OPENINGS.
4. OPENINGS LARGER THAN 2'-0"x2'-0" NOT SHOWN ON PLAN ARE NOT ALLOWED WITHOUT APPROVAL FROM ENGINEER OF RECORD.
5. REF. 3/S521 FOR LIMITATIONS ON SLEEVES AND OPENINGS AT COLUMNS.

1 TRIM BARS FOR INTERIOR OPENING IN SLAB
1" = 1'-0"

CONCRETE BEAM SCHEDULE				
MARK	WIDTH	DEPTH	REINFORCING	STIRRUPS
B - A	1'-0"	1'-6"	REF. 13/S521	REF. 13/S521

14 BEAM SCHEDULE
N.T.S.

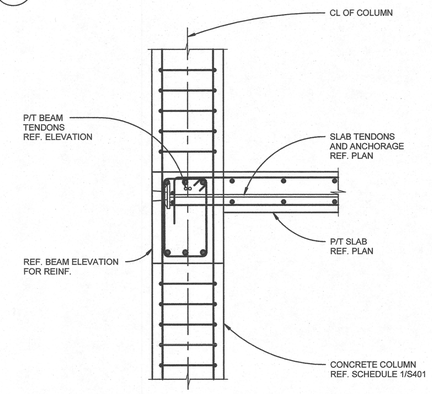

10 P/T BEAM AT COLUMN
1" = 1'-0"

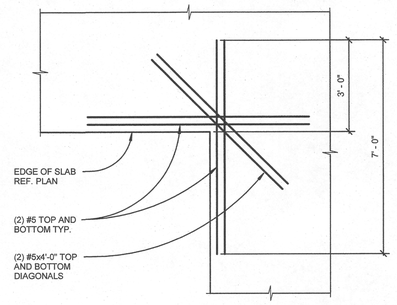

6 TRIM BARS AT RE-ENTRANT CORNERS
1/2" = 1'-0"

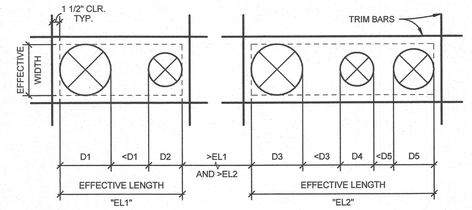

NOTES:

1. OPENINGS WHICH ARE CLOSER TO ONE ANOTHER THAN THE DIAMETER OF THE LARGER OF THE TWO ARE CONSIDERED TO FORM A COMBINED OPENING.
2. IF THE COMBINED OPENING IS LESS THAN 1'-0", NO TRIM BARS ARE REQUIRED. IF THE COMBINED OPENING IS MORE THAN 1'-0", BUT LESS THAN 2'-0", PROVIDE REINFORCING PER 1/S521.
3. DIAGONAL BARS NOT REQUIRED.
4. COMBINED OPENINGS WITH EFFECTIVE LENGTH LARGER THAN 2'-0" NOT SHOWN ON PLAN ARE NOT ALLOWED WITHOUT APPROVAL FROM ENGINEER OF RECORD.
5. REF. 3/S521 FOR LIMITATIONS ON SLEEVES AND OPENINGS AT COLUMNS.

2 TRIM BARS FOR MULTIPLE OPENINGS
1" = 1'-0"

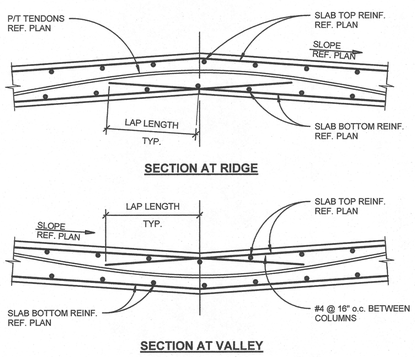

15 VALLEY/RIDGE DETAIL
1" = 1'-0"

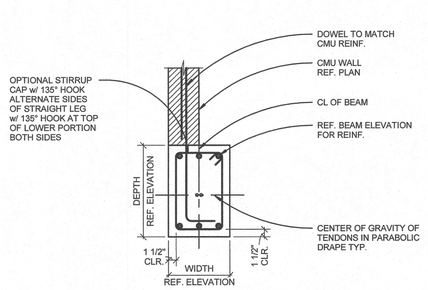

NOTE:
REF. 2/S530 FOR TOP OF CMU WALL DETAIL.

11 P/T BEAM DETAIL
1" = 1'-0"

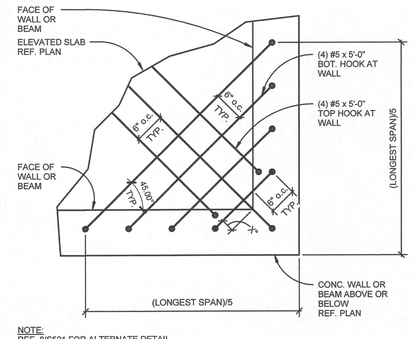

NOTE:
REF. 8/S521 FOR ALTERNATE DETAIL.

7 TYP. SLAB AT CORNER
3/4" = 1'-0"

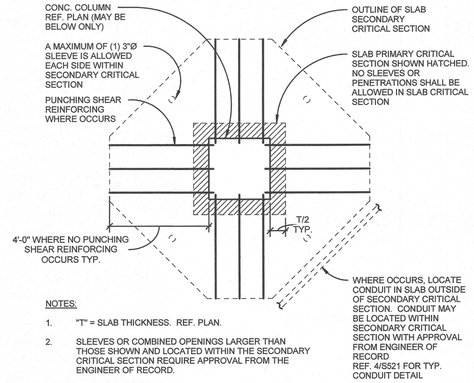

NOTES:

1. "T" = SLAB THICKNESS. REF. PLAN.
2. SLEEVES OR COMBINED OPENINGS LARGER THAN THOSE SHOWN AND LOCATED WITHIN THE SECONDARY CRITICAL SECTION REQUIRE APPROVAL FROM THE ENGINEER OF RECORD.

3 OPENING RESTRICTIONS AT COLUMNS
1/2" = 1'-0"

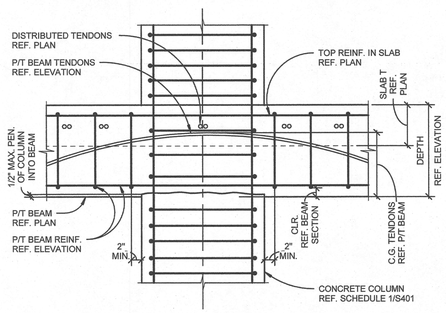

12 TYPICAL BEAM - COLUMN CONNECTION
1" = 1'-0"

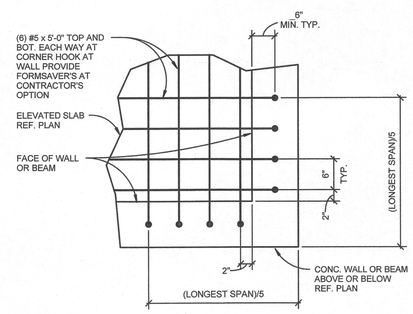

NOTE:
BARS ARE IN ADDITION TO TYP. SLAB BARS.

8 SLAB AT CORNER - ALT. DETAIL
3/4" = 1'-0"

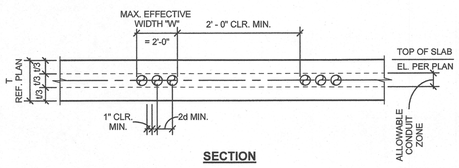

SECTION

NOTES:

1. PROVIDE 2" MIN CLEAR BETWEEN CONDUITS AND TENDONS.
2. TENDON AND MILD REINFORCING LOCATIONS TAKE PRECEDENCE OVER CONDUIT LOCATIONS.
3. STACKING OF CONDUIT IS PROHIBITED.
4. CONDUITS SHALL CROSS AT AN ANGLE NO LESS THAN 45 DEGREES. THE COMBINED DIAMETER SHALL NOT EXCEED 1/3 THE SLAB DEPTH.
5. REF. 3/S521 FOR RESTRICTIONS AT COLUMNS.

4 CONDUITS IN PT SLAB
1" = 1'-0"

LRS ARCHITECTS
720 NW Davis 503.221.1121
Suite 300 503.221.2077
Portland OR 97209 www.lrsarchitects.com

STRUCTURAL REGISTERED PROFESSIONAL ENGINEER 79478PE OREGON JULY 19, 1991 JOSHUA P. RICHARDS
EXPIRES: 12-31-18

LEVERARCHITECTURE
4713 N ALBINA AVE, PDX OR 97217
T 503 928 6040
www.leverarchitecture.com

CONSULTANT:

kpff
111 SW Fifth Ave., Suite 2500
Portland, OR 97204
O: 503.227.3251
F: 503.227.7980
www.kpff.com

PROJECT NUMBER: 1600385-R17

GRAND AVENUE APARTMENTS

1010 NE GRAND AVE. PORTLAND, OR 97232

SHEET TITLE:
POST TENSIONING DETAILS

DRAWN BY:	BJS
DATE CREATED:	08-10-2017
A Plan Check Review	09.01.2017

City of Portland REVIEWED FOR CODE COMPLIANCE DEC 22 2017 Permit Is Valid

RECEIVED SEP 06 2017 BDS DOCUMENT SERVICES

SHEET:
S521
ADDENDUM #1
08-10-2017

LRS Architects, Inc. ©2017

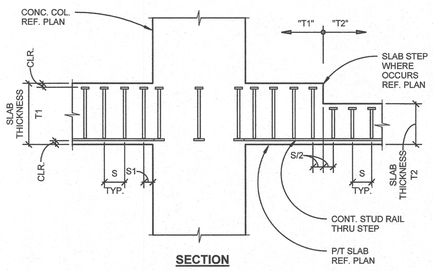

SECTION

NOTES:

1. REF. 1/S522 FOR STUD RAIL INFORMATION NOT SHOWN.
2. UNLESS NOTED OTHERWISE, PROVIDE STUDS OF DIAMETER AND SPACING REQUIRED FOR LESSER SLAB THICKNESS T2 THROUGHOUT.

2 SHEAR STUD REINFORCMENT AT SLAB STEP

1" = 1'-0"

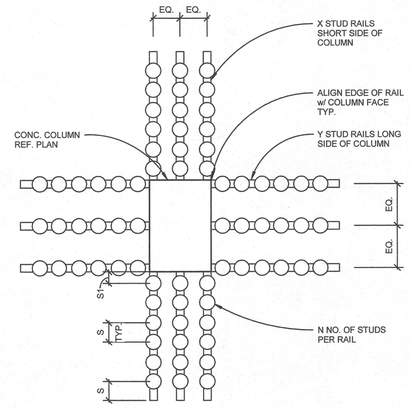

INTERIOR COLUMN

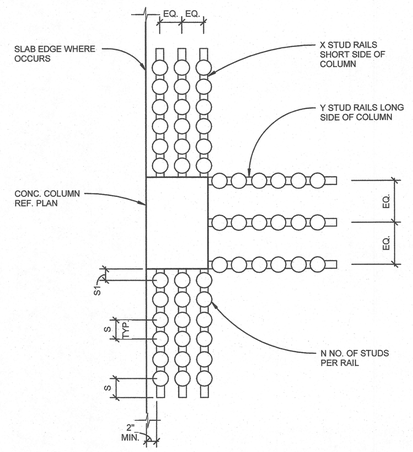

EDGE COLUMN

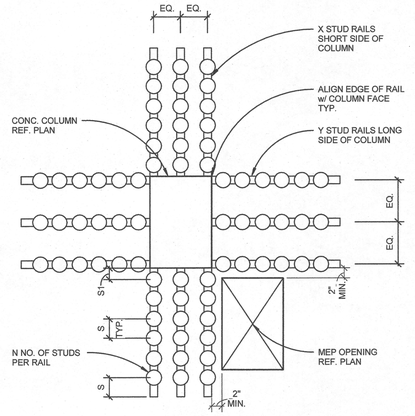

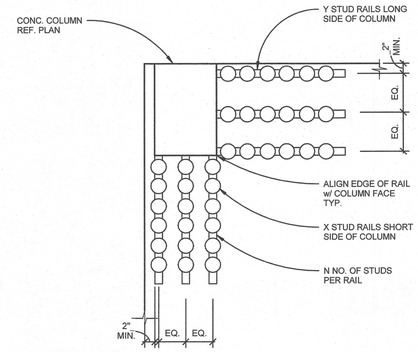

INTERIOR COLUMN WITH ADJACENT OPENING

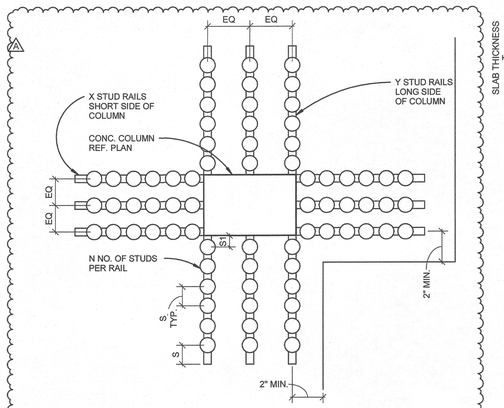

COLUMN AT SLAB NOTCH

CORNER COLUMN

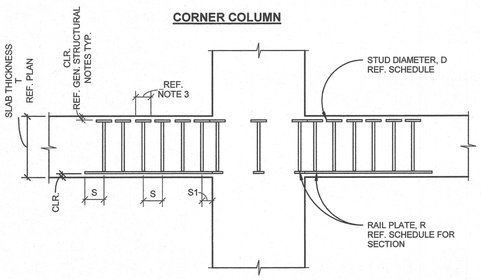

SECTION

NOTES:

1. STUDS SHALL MEET THE REQUIREMENTS OF ASTM A108 GRADES 1010 THRU 1020.
2. STUD HEIGHTS SHALL BE DETERMINED BY THE SLAB THICKNESS AND REQUIRED CONCRETE COVER SHOWN.
3. DIAMETER OF STUD HEAD SHALL BE >3.2x DIAMETER OF STUD.
4. STUDS SHALL BE FULLY WELDED TO RAIL PLATE, TYP.
5. STUDRAILS SHALL BE SPACED EVENLY ALONG COLUMN FACE. SEE DETAILS FOR ADDITIONAL SPACING REQUIREMENTS ADJACENT TO SLAB EDGES.
6. REF. 2/S523 FOR CONFIGURATION AT SLAB STEPS.
7. REF. 3/S522 FOR ACCEPTABLE OPENING LOCATIONS AT COLUMN.
8. FOR ROUND COLUMNS PLACE RAILS RADIALLY AT EQUAL SPACING AROUND COLUMN AT CONRACTORS OPTION.
9. AT EDGE AND CORNER COLUMNS PROVIDE STUDS TO FILL SPACE FROM FACE OF COLUMN TO EDGE OF SLAB WHERE CLEAR DIMENSION IS GREATER THAN 8".
10. STUD RAILS NOT REQUIRED AT FACE OF COLUMN WHERE BEAM OCCURS.

STUD RAIL SCHEDULE

MARK	D (IN)	N (STUDS/RAIL)	X (RAILS/SIDE)	Y (RAILS/SIDE)	S1 (IN)	S (IN)	R (INxIN)
A	1/2	10	3	3	2 1/2	3 1/2	1/4"x1 1/2"
B	1/2	10	3	4	2 1/2	3 1/2	1/4"x1 1/2"
C	1/2	14	3	3	2 1/2	2 1/2	1/4"x1 1/2"
D	1/2	12	2	2	3 1/2	4 1/2	1/4"x1 1/2"

1 TYPICAL SHEAR STUD REINFORCING DETAILS AND SCHEDULE

1" = 1'-0"

LRS ARCHITECTS
720 NW Davis 503.221.1121
Suite 300 503.221.2077
Portland OR 97209 www.lrsarchitects.com

STRUCTURAL REGISTERED PROFESSIONAL ENGINEER 78478PE OREGON DEC. 13, 2005 JOSHUA P. RICHARDS
EXPIRES 12-31-18

LEVERARCHITECTURE
4713 N ALBINA AVE, PDX OR 97217
T 503 928 6040
www.leverarchitecture.com

CONSULTANT:

kpff
111 SW Fifth Ave., Suite 2500
Portland, OR 97204
O: 503.227.3251
F: 503.227.7980
www.kpff.com

PROJECT NUMBER: *1600385-R17*

GRAND AVENUE APARTMENTS

1010 NE GRAND AVE. PORTLAND, OR 97232

SHEET TITLE:

STUD RAIL DETAILS

DRAWN BY: *BJS*
DATE CREATED: *08-10-2017*

A	Plan Check Review	09.01.2017

City of Portland REVIEWED FOR CODE COMPLIANCE DEC 22 2017 Permit Number

RECEIVED SEP 06 2017 BDS DOCUMENT SERVICES

SHEET:

S522

ADDENDUM #1 08-10-2017

LRS Architects, Inc. ©2017

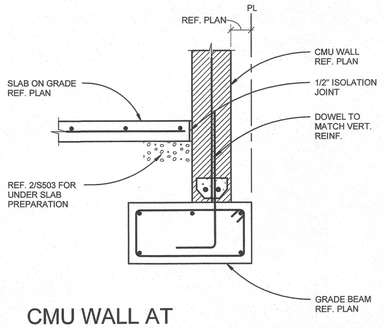

CMU WALL AT GRADE BEAM-ALTERNATE

5 1" = 1'-0"

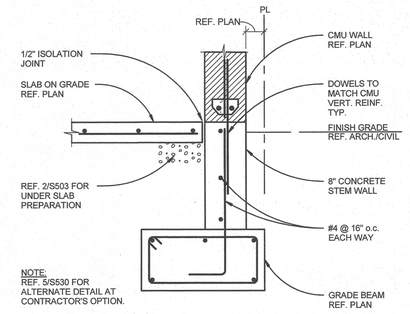

CMU WALL AT GRADE BEAM

1 1" = 1'-0"

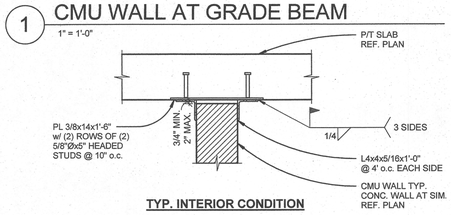

TYP. INTERIOR CONDITION

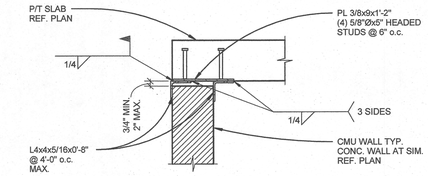

TYP. EXTERIOR CONDITION

TYPICAL TOP OF CMU WALL DETAIL

2 1" = 1'-0"

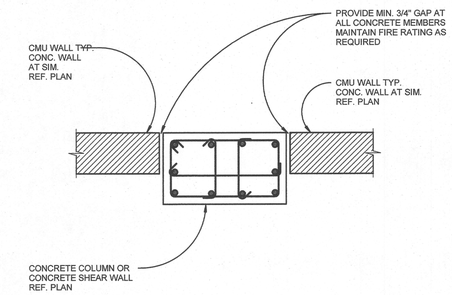

CMU WALL AT CONCRETE COLUMN OR WALL

3 1" = 1'-0"

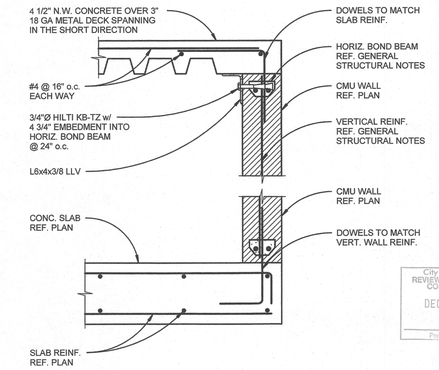

SECTION AT STAIR ENCLOSURE

4 1" = 1'-0"

LRS ARCHITECTS
720 NW Davis 503.221.1121
Suite 300 503.221.2077
Portland OR 97209 www.lrsarchitects.com

STRUCTURAL
REGISTERED PROFESSIONAL ENGINEER
79476PE
OREGON
RENEWAL: 12-31-18
JOSHUA P. RICHARDS
EXPIRES 12-31-18

LEVERARCHITECTURE
4713 N ALBINA AVE, PDX OR 97217
T 503 928 6040
www.leverarchitecture.com

CONSULTANT:

kpff
111 SW Fifth Ave., Suite 2500
Portland, OR 97204
O: 503.227.3251
F: 503.227.7980
www.kpff.com

PROJECT NUMBER: *1600385-R17*

GRAND AVENUE APARTMENTS

1010 NE GRAND AVE. PORTLAND, OR 97232

SHEET TITLE:

MASONRY DETAILS

DRAWN BY: *BJS*
DATE CREATED: *07-14-2017*

City of Portland
REVIEWED FOR CODE COMPLIANCE
DEC 22 2017
Permit Number

SHEET:
S530
PERMIT SET
07-14-2017

LRS Architects, Inc. ©2017

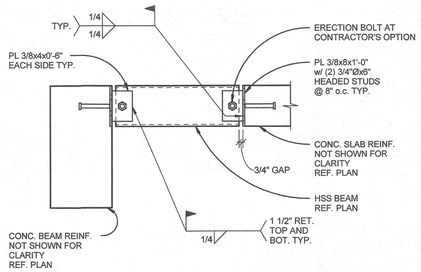

5 SECTION AT STAIR PRESSURIZATION SHAFT

1" = 1'-0"

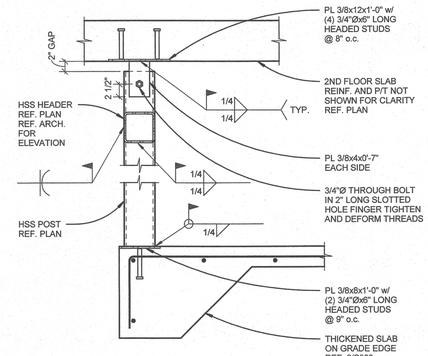

1 SECTION AT GARAGE DOOR

1" = 1'-0"

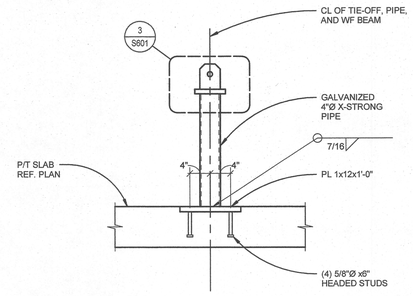

NOTE:
DESIGN BASED ON 5000 LBS.
ULTIMATE LOAD IN ANY DIRECTION.

2 OSHA ROOF TIE-OFF DETAIL

1" = 1'-0"

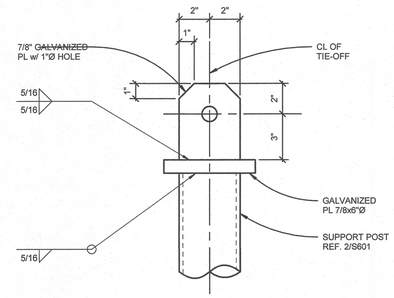

NOTE:
DESIGN BASED ON 5000 LBS.
ULTIMATE LOAD IN ANY DIRECTION.

3 OSHA ROOF TIE-OFF DETAIL

3" = 1'-0"

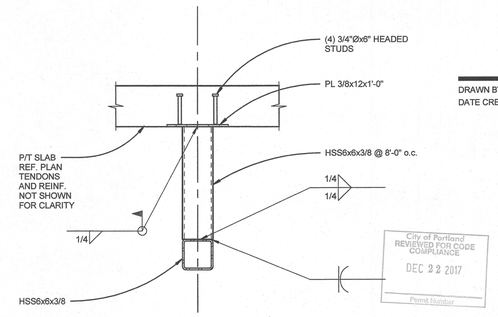

4 SLIDING GATE SUPPORT

1" = 1'-0"

LRS ARCHITECTS
720 NW Davis 503.221.1121
Suite 300 503.221.2077
Portland OR 97209 www.lrsarchitects.com

STRUCTURAL REGISTERED PROFESSIONAL ENGINEER 79472PE OREGON JOSHUA P. RICHARDS
EXPIRES 12-31-18

LEVERARCHITECTURE
4713 N ALBINA AVE, PDX OR 97217
T 503 928 6040
www.leverarchitecture.com

CONSULTANT:

kpff
111 SW Fifth Ave., Suite 2500
Portland, OR 97204
O: 503.227.3251
F: 503.227.7980
www.kpff.com

PROJECT NUMBER: *1600385-R17*

GRAND AVENUE APARTMENTS

1010 NE GRAND AVE. PORTLAND, OR 97232

SHEET TITLE:
STEEL DETAILS

DRAWN BY: *BJS*
DATE CREATED: *07-14-2017*

SHEET:
S601
PERMIT SET
07-14-2017

LRS Architects, Inc. ©2017

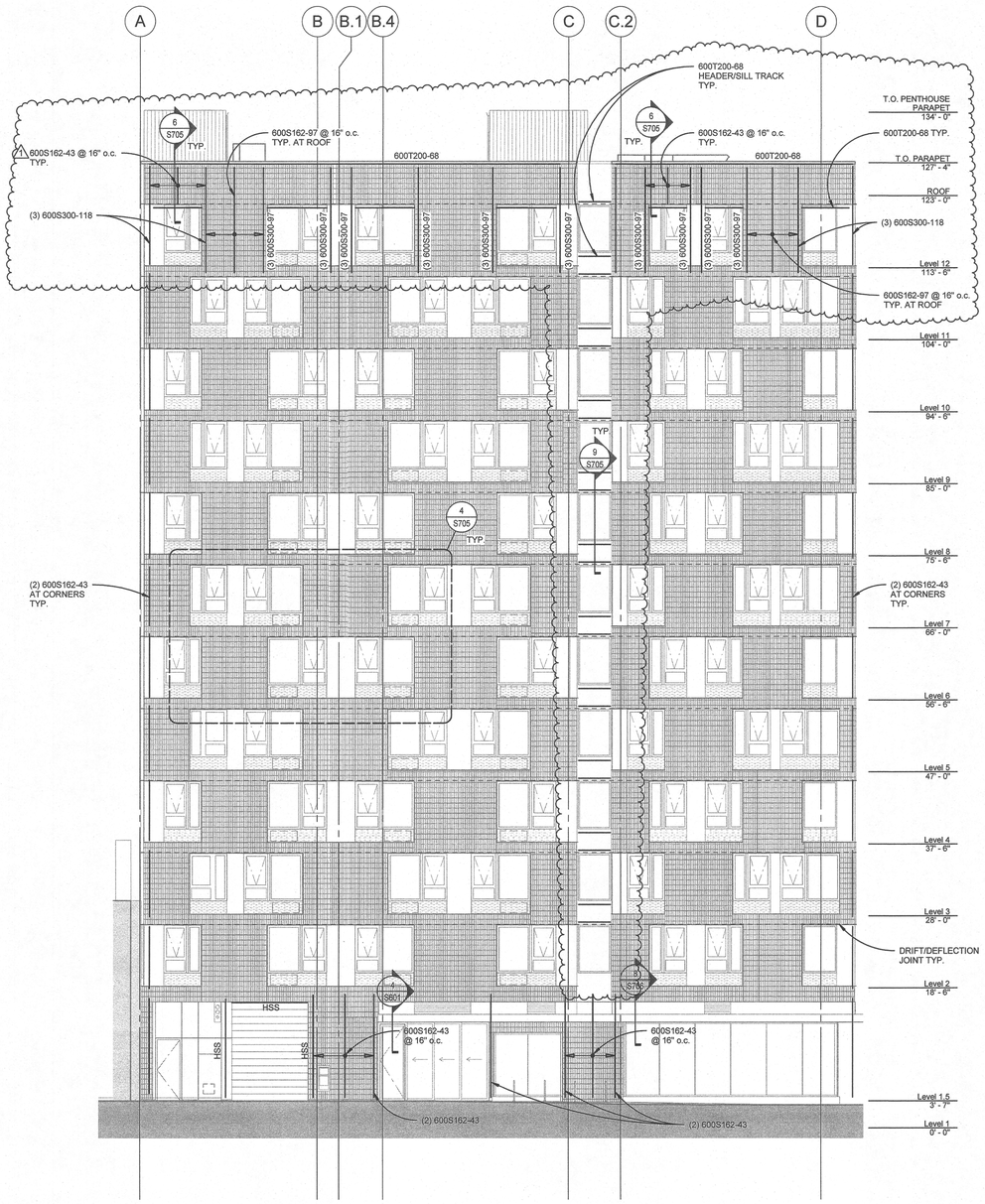

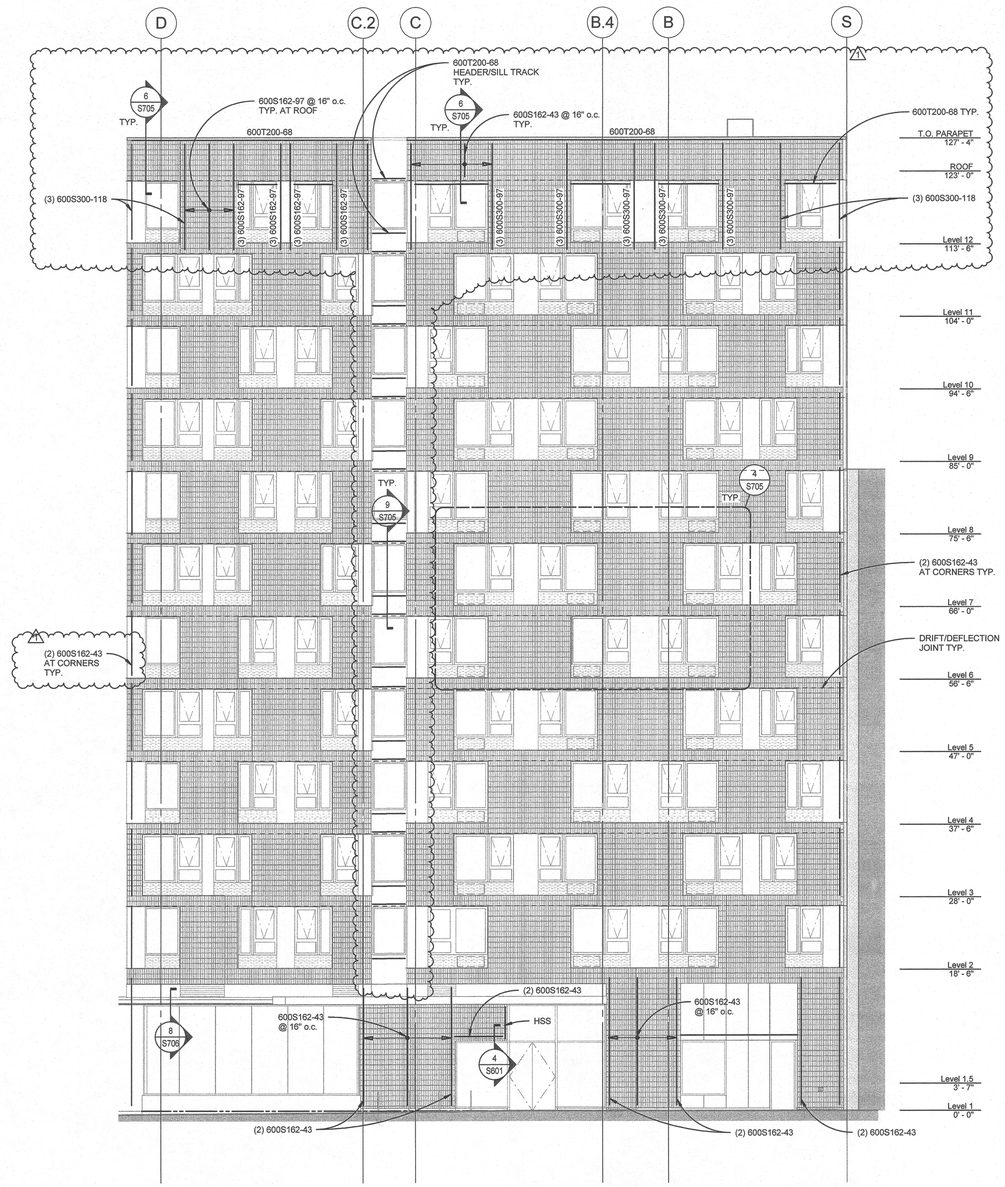

NOTES:

1. REF. S705 AND S706 FOR METAL STUD FRAMING DETAILS.
2. WHERE BOTH FACES OF STUDS ARE NOT FULLY SHEATHED, PROVIDE BRIDGING PER 6/S706 OR BLOCKING PER 7/S706.
3. COORDINATE STUD FRAMING AND DIMENSIONS WITH ARCHITECTURAL DRAWINGS.
4. ⟷ INDICATES DRIFT / DEFLECTION JOINT.
5. STUD FRAMING TO BE 600S162-43 @ 16" o.c. U.N.O.

2 NORTH ELEVATION
1/8" = 1'-0"

1 SOUTH ELEVATION
1/8" = 1'-0"

LRS ARCHITECTS
720 NW Davis 503.221.1121
Suite 300 503.221.2077
Portland OR 97209 www.lrsarchitects.com

JOSHUA P. RICHARDS
REGISTERED PROFESSIONAL ENGINEER
79476PE
OREGON
RENEWAL 12 31 18
EXPIRES 12-31-18

LEVERARCHITECTURE
4713 N ALBINA AVE, PDX OR 97217
T 503 928 6040
www.leverarchitecture.com

CONSULTANT:

kpff
111 SW Fifth Ave., Suite 2500
Portland, OR 97204
O: 503.227.3251
F: 503.227.7980
www.kpff.com

PROJECT NUMBER: *1600385-R17*

GRAND AVENUE APARTMENTS

1010 NE GRAND AVE. PORTLAND, OR 97232

SHEET TITLE:
EXTERIOR FRAMING ELEVATIONS

DRAWN BY: *BJS*
DATE CREATED: *08-10-2017*

1	Addendum #01	08.11.2017

City of Portland REVIEWED FOR CODE COMPLIANCE DEC 22 2017 Permit Number
RECEIVED SEP 06 2017 BDS DOCUMENT SERVICES

SHEET:
S701
ADDENDUM #1
08-10-2017

LRS Architects, Inc. ©2017

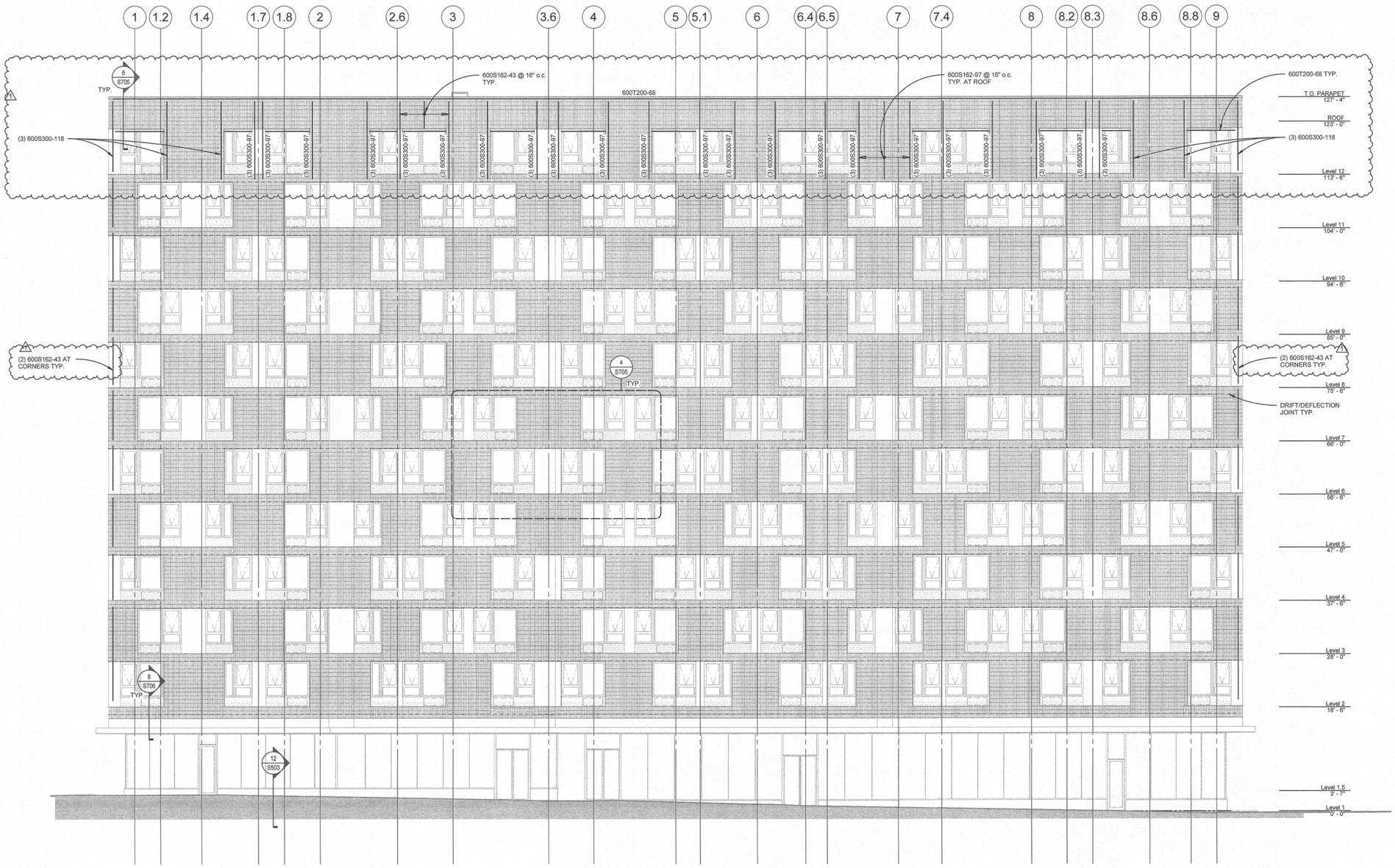

NOTES:

1. REF. S705 AND S706 FOR METAL STUD FRAMING DETAILS.
2. WHERE BOTH FACES OF STUDS ARE NOT FULLY SHEATHED, PROVIDE BRIDGING PER 6/S706 OR BLOCKING PER 7/S706.
3. COORDINATE STUD FRAMING AND DIMENSIONS WITH ARCHITECTURAL DRAWINGS.
4. ⟷ INDICATES DRIFT / DEFLECTION JOINT.
5. STUD FRAMING TO BE 600S162-43 @ 16" o.c. U.N.O.

1 WEST ELEVATION

1/8" = 1'-0"

LRS ARCHITECTS
720 NW Davis 503.221.1121
Suite 300 503.221.2077
Portland OR 97209 www.lrsarchitects.com

STRUCTURAL
REGISTERED PROFESSIONAL ENGINEER
7947EPE
OREGON
JOSHUA P. RICHARDS
EXPIRES 12-31-18

LEVERARCHITECTURE
4713 N ALBINA AVE, PDX OR 97217
T 503 928 6040
www.leverarchitecture.com

CONSULTANT:

kpff
111 SW Fifth Ave., Suite 2500
Portland, OR 97204
O: 503.227.3251
F: 503.227.7980
www.kpff.com

PROJECT NUMBER: *1600385-R17*

GRAND AVENUE APARTMENTS

1010 NE GRAND AVE. PORTLAND, OR 97232

SHEET TITLE:

EXTERIOR FRAMING ELEVATIONS

DRAWN BY: *BJS*
DATE CREATED: *08-10-2017*

1	Addendum #01	08.11.2017

City of Portland
REVIEWED FOR CODE COMPLIANCE
DEC 22 2017
Permit Number

RECEIVED
SEP 06 2017
BDS
DOCUMENT SERVICES

SHEET:
S702
ADDENDUM #1
08-10-2017

LRS Architects, Inc. ©2017

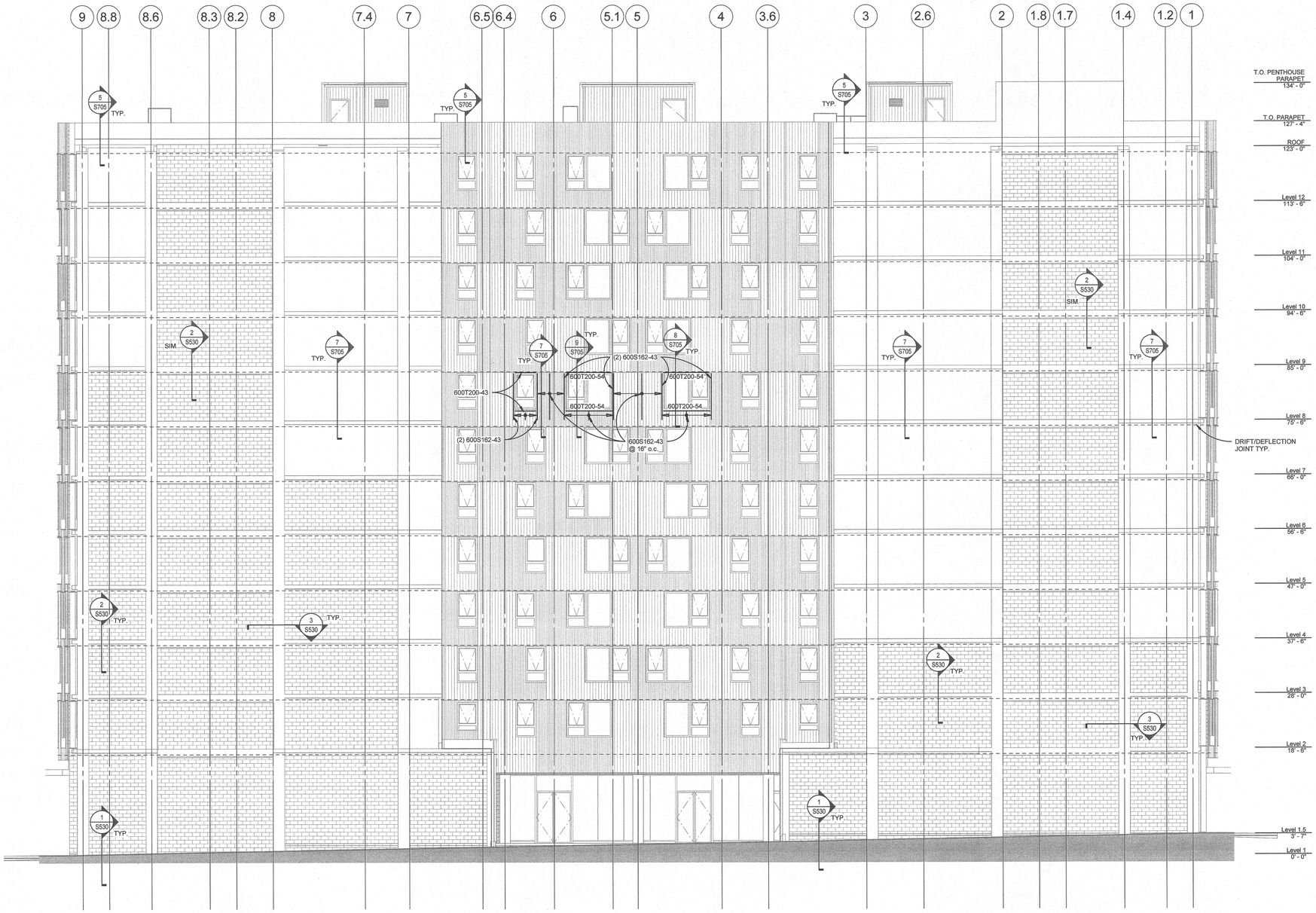

NOTES:

1. REF. S705 AND S706 FOR METAL STUD FRAMING DETAILS.
2. WHERE BOTH FACES OF STUDS ARE NOT FULLY SHEATHED, PROVIDE BRIDGING PER 6/S706 OR BLOCKING PER 7/S706.
3. COORDINATE STUD FRAMING AND DIMENSIONS WITH ARCHITECTURAL DRAWINGS.
4. INDICATES DRIFT / DEFLECTION JOINT.
5. STUD FRAMING TO BE 600S162-43 @ 16" o.c. U.N.O.

NOTE:
FRAMING SHOWN IS TYPICAL ACROSS ELEVATION.

1 EAST ELEVATION
1/8" = 1'-0"

LRS ARCHITECTS
720 NW Davis 503.221.1121
Suite 300 503.221.2077
Portland OR 97209 www.lrsarchitects.com

STRUCTURAL REGISTERED PROFESSIONAL ENGINEER 79476PE OREGON MAR 13 2007 YOSHUA P. RICHARDS
EXPIRES 12-31-18

LEVERARCHITECTURE
4713 N ALBINA AVE, PDX OR 97217
T 503 928 6040
www.leverarchitecture.com

CONSULTANT:

kpff
111 SW Fifth Ave., Suite 2500
Portland, OR 97204
O: 503.227.3251
F: 503.227.7980
www.kpff.com

PROJECT NUMBER: 1600385-R17

GRAND AVENUE APARTMENTS

1010 NE GRAND AVE. PORTLAND, OR 97232

SHEET TITLE:

EXTERIOR FRAMING ELEVATIONS

DRAWN BY: BJS
DATE CREATED: 07-14-2017

City of Portland REVIEWED FOR CODE COMPLIANCE
DEC 22 2017
Permit Number

SHEET:

S703

PERMIT SET
07-14-2017

LRS Architects, Inc. ©2017

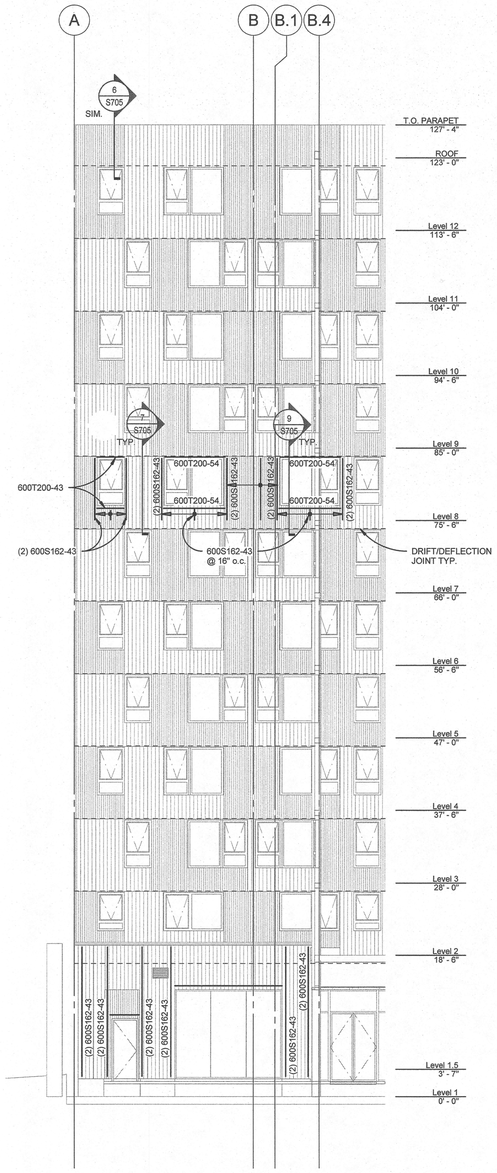

2 COURTYARD NORTH ELEVATION
1/8" = 1'-0"

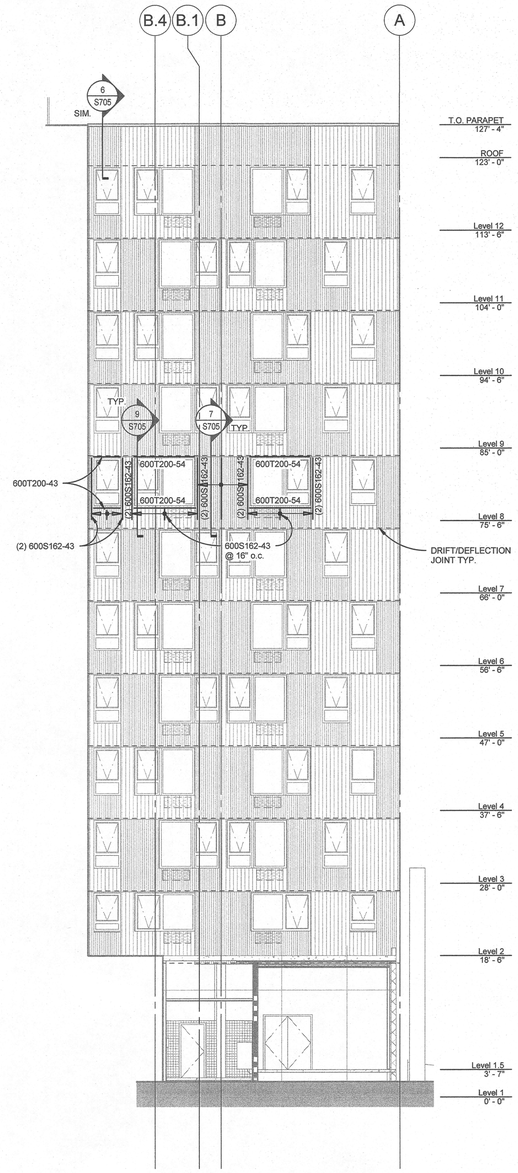

1 COURTYARD SOUTH ELEVATION
1/8" = 1'-0"

NOTES:

1. REF. S705 AND S706 FOR METAL STUD FRAMING DETAILS.
2. WHERE BOTH FACES OF STUDS ARE NOT FULLY SHEATHED, PROVIDE BRIDGING PER 6/S706 OR BLOCKING PER 7/S706.
3. COORDINATE STUD FRAMING AND DIMENSIONS WITH ARCHITECTURAL DRAWINGS.
4. INDICATES DRIFT / DEFLECTION JOINT.
5. STUD FRAMING TO BE 600S162-43 @ 16" o.c. U.N.O.

NOTE:
FRAMING SHOWN IS TYPICAL ACROSS ELEVATION.

LRS ARCHITECTS
720 NW Davis 503.221.1121
Suite 300 503.221.2077
Portland OR 97209 www.lrsarchitects.com

STRUCTURAL REGISTERED PROFESSIONAL ENGINEER 79476PE OREGON MAR 12 2007 JOSHUA P. RICHARDS
EXPIRES 12-31-18

LEVERARCHITECTURE
4713 N ALBINA AVE, PDX OR 97217
T 503 928 6040
www.leverarchitecture.com

CONSULTANT:

kpff
111 SW Fifth Ave., Suite 2500
Portland, OR 97204
O: 503.227.3251
F: 503.227.7980
www.kpff.com

PROJECT NUMBER: 1600385-R17

GRAND AVENUE APARTMENTS

1010 NE GRAND AVE. PORTLAND, OR 97232

SHEET TITLE:

EXTERIOR FRAMING ELEVATIONS

DRAWN BY: BJS
DATE CREATED: 07-14-2017

City of Portland
REVIEWED FOR CODE COMPLIANCE
DEC 22 2017
Permit Number

SHEET:
S704
PERMIT SET
07-14-2017

LRS Architects, Inc. ©2017

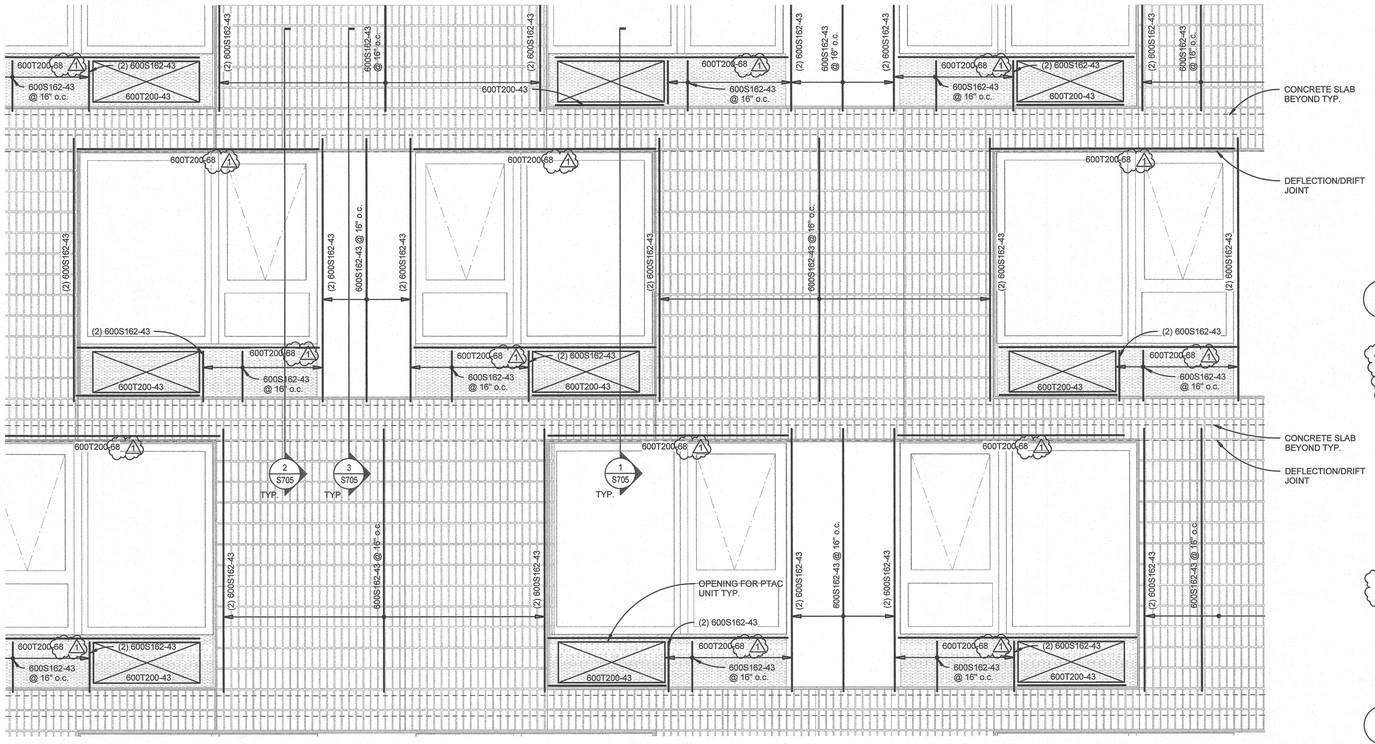

4 PARTIAL ELEVATION
1/2" = 1'-0"

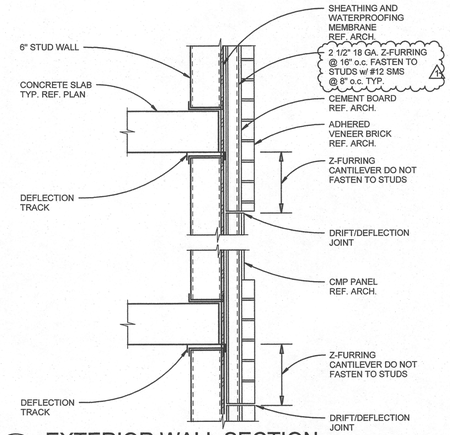

3 EXTERIOR WALL SECTION
1" = 1'-0"

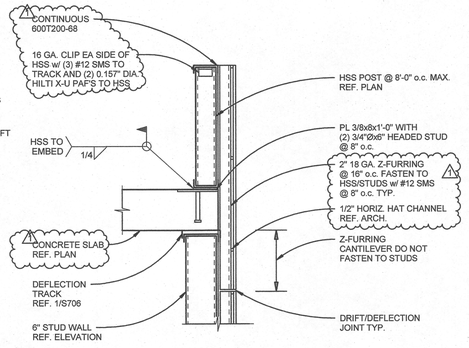

5 SECTION AT PARAPET
1" = 1'-0"

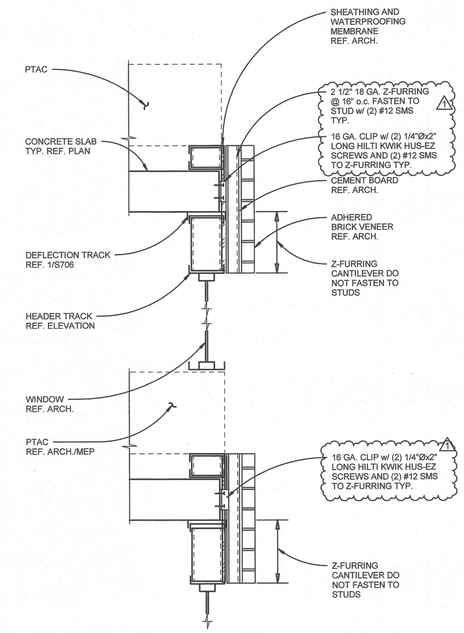

1 EXTERIOR WALL SECTION AT PTAC
1" = 1'-0"

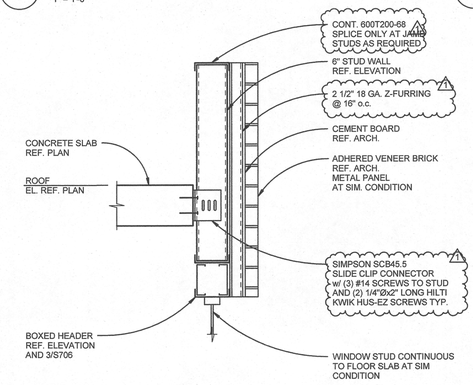

6 SECTION AT PARAPET
1" = 1'-0"

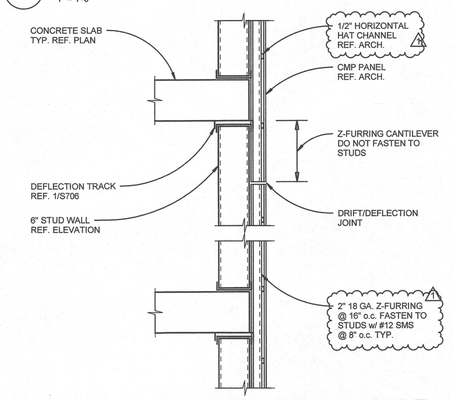

7 SECTION AT METAL PANEL FACADE
1" = 1'-0"

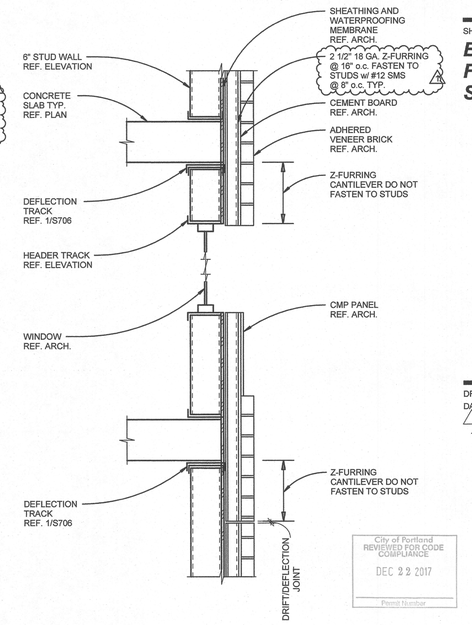

2 EXTERIOR WALL SECTION AT WINDOW
1" = 1'-0"

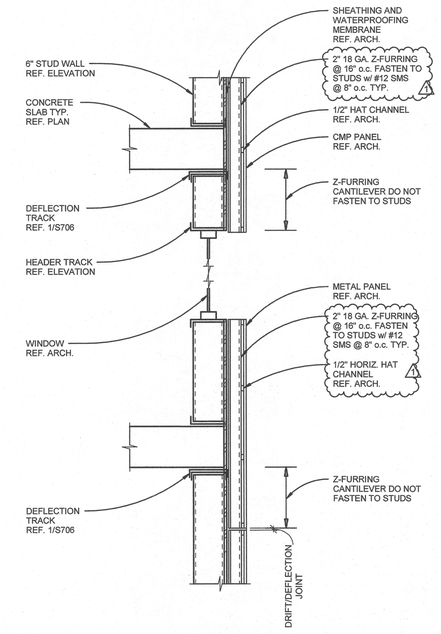

9 EXTERIOR WALL SECTION AT WINDOW
1" = 1'-0"

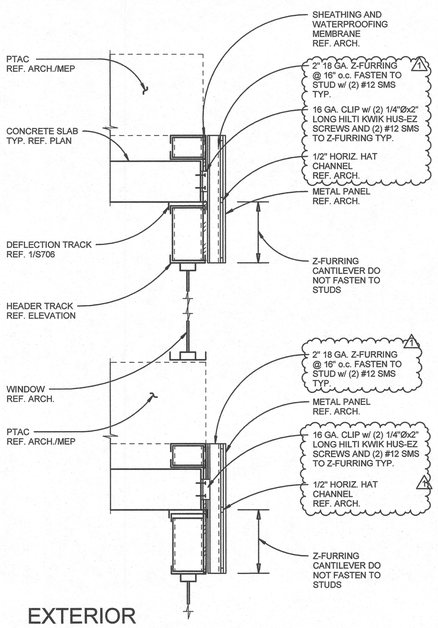

8 EXTERIOR WALL SECTION AT PTAC
1" = 1'-0"

LRS ARCHITECTS
720 NW Davis 503.221.1121
Suite 300 503.221.2077
Portland OR 97209 www.lrsarchitects.com

STRUCTURAL ENGINEER REGISTERED PROFESSIONAL 7947PE OREGON RENEWS: 12-31-2018 JOSHUA P. RICHARDS
EXPIRES: 12-31-18

LEVERARCHITECTURE
4713 N ALBINA AVE, PDX OR 97217
T 503 928 6040
www.leverarchitecture.com

CONSULTANT:

kpff
111 SW Fifth Ave., Suite 2500
Portland, OR 97204
O: 503.227.3251
F: 503.227.7980
www.kpff.com

PROJECT NUMBER: *1600385-R17*

GRAND AVENUE APARTMENTS

1010 NE GRAND AVE. PORTLAND, OR 97232

SHEET TITLE:
EXTERIOR FRAMING SECTIONS

DRAWN BY: *BJS*
DATE CREATED: *08-10-2017*

1	Addendum #01	08.11.2017

City of Portland REVIEWED FOR CODE COMPLIANCE DEC 22 2017 Permit Number

RECEIVED SEP 06 2017 BDS DOCUMENT SERVICES

SHEET:
S705
ADDENDUM #1 08-10-2017

LRS Architects, Inc. ©2017

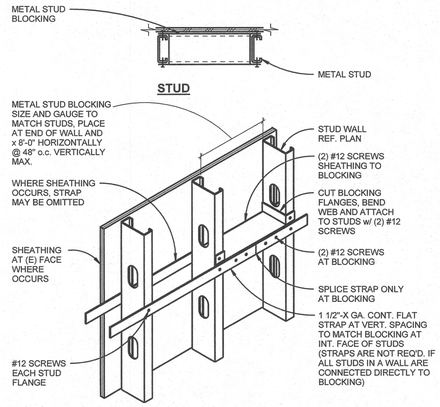

7 TYP. BLOCKING DETAIL
1" = 1'-0"

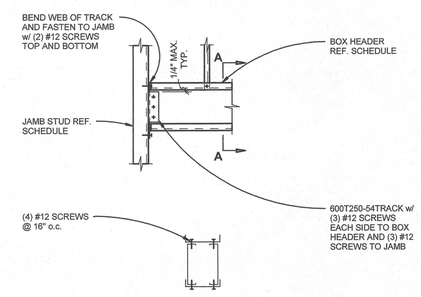

SECTION A-

3 TYP. WALL HEADER DETAIL
1" = 1'-0"

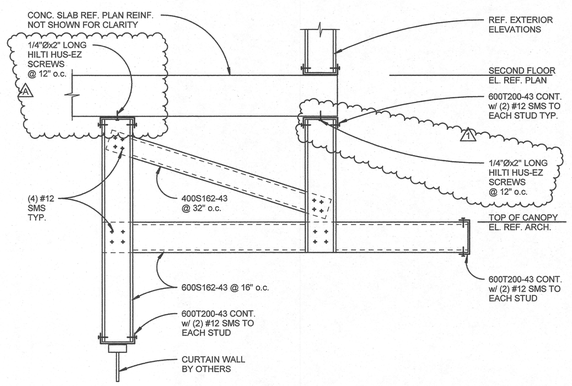

8 SECTION AT CANOPY
1" = 1'-0"

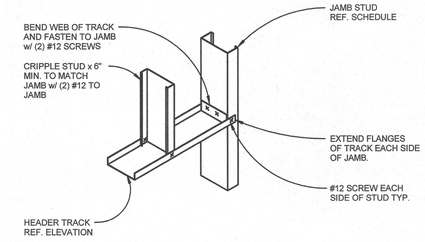

4 TYP. HEADER/SILL TO JAMB DETAIL
1" = 1'-0"

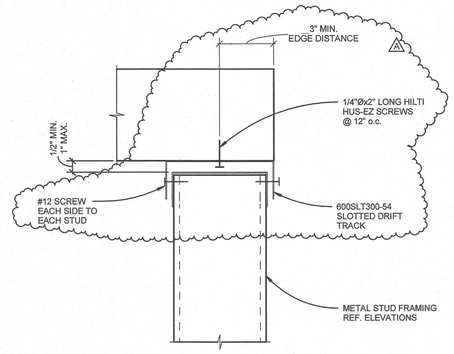

CONCRETE

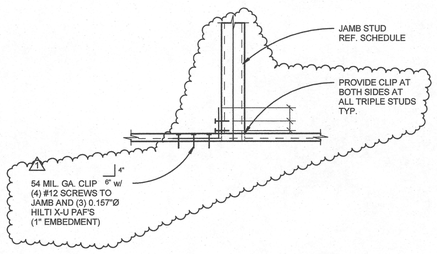

5 TYP. BASE OF JAMB CONNECTION
1 1/2" = 1'-0"

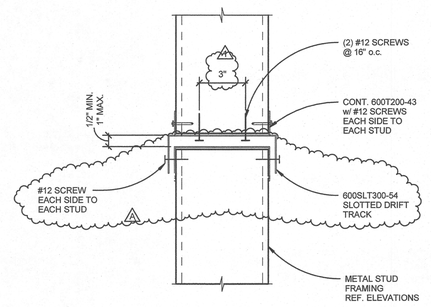

LIGHT GAGE

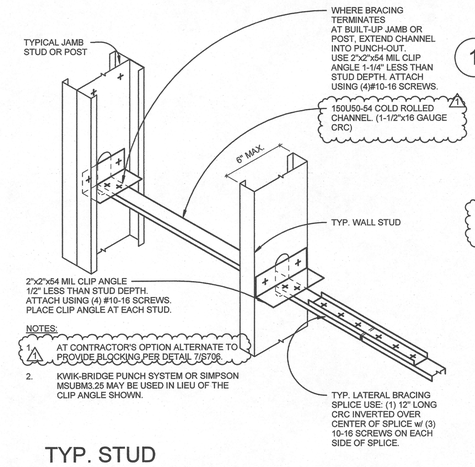

6 TYP. STUD LATERAL BRACING DETAIL
1" = 1'-0"

1 SLOTTED TRACK DETAIL
3" = 1'-0"

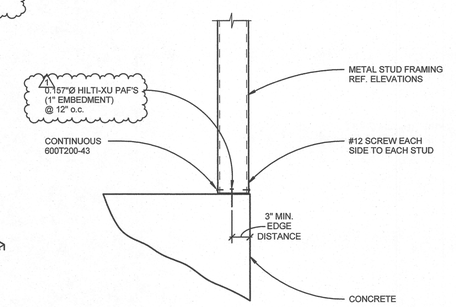

2 STUD TO CONCRETE CONNECTION
1" = 1'-0"

LRS ARCHITECTS
720 NW Davis 503.221.1121
Suite 300 503.221.2077
Portland OR 97209 www.lrsarchitects.com

STRUCTURAL REGISTERED PROFESSIONAL ENGINEER 79476PE OREGON JAN. 19, 2005 JOSHUA P. RICHARDS
EXPIRES 12-31-18

LEVERARCHITECTURE
4713 N ALBINA AVE, PDX OR 97217
T 503 928 6040
www.leverarchitecture.com

CONSULTANT:

kpff
111 SW Fifth Ave., Suite 2500
Portland, OR 97204
O: 503.227.3251
F: 503.227.7980
www.kpff.com

PROJECT NUMBER: *1600385-R17*

GRAND AVENUE APARTMENTS

1010 NE GRAND AVE. PORTLAND, OR 97232

SHEET TITLE:
TYPICAL CLADDING DETAILS

DRAWN BY: *BJS*
DATE CREATED: *08-10-2017*

1	Addendum #01	08.11.2017
A	Plan Check Review	09.01.2017

RECEIVED SEP 06 2017 BDS DOCUMENT SERVICES

SHEET:
S706
ADDENDUM #1 08-10-2017

LRS Architects, Inc. ©2017

ELECTRICAL DEVICES

- BUS DUCT
- BUS PLUG
- CEILING FAN
- ELECTRICAL EQUIPMENT CONNECTION
- ELECTRICAL CONNECTION -M&P SCHEDULED MOTOR
- EPO
- GROUND BAR
- J-BOX - CEILING
- J-BOX - FLOOR
- J-BOX - WALL
- RECEPTACLE - CEILING - DOUBLE DUPLEX
- RECEPTACLE - CEILING - DUPLEX
- RECEPTACLE - CEILING - SPECIALTY
- RECEPTACLE - FLOOR -DOUBLE DUPLEX
- RECEPTACLE - FLOOR - DUPLEX
- RECEPTACLE - WALL - DOUBLE DUPLEX
- RECEPTACLE - WALL - DUPLEX
- RECEPTACLE - WALL - SIMPLEX
- RECEPTACLE - WALL - SPECIALTY
- RECEPTACLE - WALL - DUPLEX - HALF SWITCHED
- WALL HEATER
- WIRE MOLD - WALL

FIRE ALARM DEVICES

- BELL - WALL
- SMOKE DETECTOR - DUCT
- HEAT DETECTOR - CEILING
- IONIZATION DETECTOR - CEILING
- IONIZATION DETECTOR W/ HORN/STROBE - CEILING
- PHOTOELECTRIC DETECTOR - CEILING
- PHOTOELECTRIC DETECTOR W/ HORN/STROBE - CEILING
- FIRE ALARM PULL STATION - WALL
- FIRE ALARM STROBE - WALL
- HEAT DETECTOR - WALL
- IONIZATION DETECTOR - WALL
- PHOTOELECTRIC SMOKE DETECTOR - WALL
- FAC P — FIRE ALARM CONTROL PANEL - WALL
- KNOX BOX - 3200 SERIES
- FIRE ALARM W/ HORN/STROBE - CEILING
- INTERCOM HORN - CEILING
- FIRE ALARM W/ HORN/STROBE - WALL
- INTERCOM HORN - WALL
- ALARM MODULE
- BEAM DETECTOR RECEIVER
- BEAM DETECTOR TRANSMITTER
- CONTROL MODULE
- FIRE DOOR RELEASE
- MAGNETIC DOOR HOLDER
- SPRINKLER FLOW SWITCH
- SPRINKLER TAMPER SWITCH

LIGHTING DEVICES

- CONTROL PANEL - WALL
- OS — OCCUPANCY SYMBOL - CEILING
- PP — POWER PACK - CEILING
- R — RELAY - CEILING
- SP — SLAVE PACK - CEILING
- $ — SWITCH
- $2 — TWO-WAY SWITCH
- $3 — THREE-WAY SWITCH
- $4 — FOUR-WAY SWITCH
- $C — DIMMER SWITCH
- $K — KEY-OPERATED SWITCH
- $LV — LOW-VOLTAGE SWITCH
- $OS — OCCUPANCY SENSOR - CEILING
- $PL — PILOT LIGHT
- $T — THERMAL SWITCH
- $TS — TIMER SWITCH
- $WP — WEATHER-PROOF SWITCH

LIGHTING FIXTURES

- BOLLARD
- CONCEALED EGRESS LIGHT
- CONTINUOUS LINEAR LED
- EMERGENCY BUG EYES - WALL
- EXIT LIGHT - CEILING
- EXIT LIGHT - PERPENDICULAR TO WALL
- EXIT LIGHT - SURFACE MOUNTED
- LINEAR TROFFER - CEILING
- LINEAR STRIP
- LINEAR PENDANT - SUSPENDED
- LINEAR STRIP - WALL
- MULTI-ADJUSTABLE LIGHT - CEILING
- ROUND LIGHT - ADJUSTABLE - CEILING
- ROUND LIGHT - DOWNLIGHT - CEILING
- ROUND LIGHT - SURFACE CAN - CEILING
- ROUND LIGHT - WALL WASH - CEILING
- ROUND LIGHT - IN-GRADE
- ROUND LIGHT - PENDANT
- ROUND LIGHT - WALL
- SQUARE LIGHT - SITE - WALL
- LIGHT -SITE POLE
- LIGHT -TRACK
- LIGHT -TRACK HEAD

SECURITY DEVICES

- CAMERA - CEILING
- J — MISC. DEVICE - CEILING
- CR — CARD READER

DATA DEVICES

- CABLE RUNWAY ELEVATION (PLAN, FRONT, RIGHT)
- MISC. DEVICE - WALL
- AP — OUTLET - CEILING - ACCESS POINT
- Z — OUTLET - CEILING - ZIGBEE
- OUTLET - FLOOR - COMBO
- OUTLET - FLOOR - DATA
- OUTLET - FLOOR - VOICE
- OUTLET - WALL - COMBO
- OUTLET - WALL - DATA
- OUTLET - WALL - VOICE
- TERMINATION BOARD
- COMBINATION RF COAX AND DATA OUTLET

ELECTRICAL EQUIPMENT

- ELECTRICAL EQUIPMENT
- DRY-TYPE TRANSFORMER
- PANELBOARD - RECESSED
- PANELBOARD - SURFACE
- ELECTRICAL CLEARANCE
- T — UTILITY TRANSFORMER
- UTILITY VAULT - PRECAST (OLD CASTLE)

RISER SYMBOLS

- AUTOMATIC TRANSFER SWITCH
- BUS TAP
- SWITCH, CIRCUIT BREAKER
- CURRENT TRANSFORMER
- F C VFD — DISCONNECT - FUSED, ENCLOSED, VFD
- DIST. PNL. H2D1 800A — DISTRIBUTION PANEL
- 200AA — FEEDER TAG
- FUSED BREAKER
- G — GENERATOR
- GROUND
- METER, UTILITY METER
- MOTOR
- PNL. L2P1 200A — PANELBOARD
- T — UTILITY TRANSFORMER - WITH VAULT
- T — UTILITY TRANSFORMER
- T — TRANSFORMER

EQUIPMENT NAMING CONVENTION

EXAMPLES

SWBD	L	1	A	1	
PNL	E	L	1A	B	2
EQUIPMENT TYPE	VOLTAGE		SERVICE		
	POWER TYPE	FLOOR	ORDER		

EQUIPMENT TYPE
SUB - UNIT SUBSTATION
SWBD - SWITCHBOARD
SWGR- SWITCHGEAR
DP - DISTRIBUTION PANEL
PNL - BRANCH PANEL
ATS - AUTOMATIC TRANSFER SWITCH
XFMR - TRANSFORMER

TYPE OF POWER
BLANK - NORMAL LOADS
E - EMERGENCY POWER
S - STANDBY POWER
U - UNINTERRUPTABLE POWER (UPS)

VOLTAGE
H - 480/277 V
L - 208/120 V
MV - MEDIUM VOLTAGE

FLOOR
B - BASEMENT
1 - FIRST FLOOR
M - MEZZANINE
R - ROOF

DRAWING INDEX

SHEET NO.	SHEET NAME	CURRENT REVISION NO.	DESCRIPTION	DATE
E000	ELECTRICAL LEGEND AND ABBREVIATIONS			
E001	ELECTRICAL SCHEDULES			
E002	LUMINAIRE SCHEDULE			
E101	ELECTRICAL SITE PLAN			
E300	BASEMENT ELECTRICAL FLOOR PLAN			
E301	LEVEL 1 ELECTRICAL FLOOR PLAN			
E302	LEVEL 2-6, 8-10 ELECTRICAL FLOOR PLAN			
E307	LEVEL 7 ELECTRICAL FLOOR PLAN			
E311	LEVEL 11 ELECTRICAL FLOOR PLAN			
E312	LEVEL 12 ELECTRICAL FLOOR PLAN			
E313	ROOF ELECTRICAL PLAN			
E401	ENLARGED ELECTRICAL PLANS			
E501	TYPICAL ENLARGED UNIT PLANS			
E502	TYPICAL ENLARGED UNIT PLANS			
E503	TYPICAL ENLARGED UNIT PLANS			
E601	ELECTRICAL SINGLE-LINE DIAGRAM			
E602	ELECTRICAL GROUNDING RISER			
E701	PANEL SCHEDULES			
E702	PANEL SCHEDULES			
E901	ELECTRICAL DETAILS			

LRS ARCHITECTS
720 NW Davis 503.221.1121
Suite 300 503.221.2077
Portland OR 97209 www.lrsarchitects.com

REGISTERED PROFESSIONAL ENGINEER #74350 OREGON JUNE 2, 2010 JENNIFER K. STREB
EXP. DATE: 6/30/2018

LEVERARCHITECTURE
4713 N ALBINA AVE, PDX OR 97217
T 503 928 6040
www.leverarchitecture.com

CONSULTANT:

SAMATA CONSULTING ENGINEERS LLC

PROJECT NUMBER: 215349

GRAND AVENUE APARTMENTS

1010 NE GRAND AVE. PORTLAND, OR 97232

SHEET TITLE:
ELECTRICAL LEGEND AND ABBREVIATIONS

DRAWN BY: -
DATE CREATED: -

SHEET:
E000
PERMIT SET
07-14-2017

LRS Architects, Inc. ©2017

ALUMINUM/COPPER WIRE AND CONDUIT SCHEDULE

(3) WIRE		(4) WIRE		(2) WIRE	
SYMBOL	(3) WIRE & GROUND, CONDUIT	SYMBOL	(4) WIRE & GROUND, CONDUIT	SYMBOL	(2) AND (5) WIRE & GROUND, CONDUIT
3W15	3 #14 CU & 1 #14 CU G, 3/4"C	4W15	4 #14 CU & 1 #14 CU G, 3/4"C	2W15	2 #14 CU & 1 #14 CU G, 3/4"C
3W20	3 #12 CU & 1 #12 CU G, 3/4"C	4W20	4 #12 CU & 1 #12 CU G, 3/4"C	2W20	2 #12 CU & 1 #12 CU G, 3/4"C
3W30	3 #10 CU & 1 #10 CU G, 3/4"C	4W30	4 #10 CU & 1 #10 CU G, 3/4"C	2W30	2 #10 CU & 1 #10 CU G, 3/4"C
3W35	3 #8 CU & 1 #10 CU G, 3/4"C	4W35	4 #8 CU & 1 #10 CU G, 3/4"C	2W35	2 #8 CU & 1 #10 CU G, 3/4"C
3W40	3 #8 CU & 1 #10 CU G, 3/4"C	4W40	4 #8 CU & 1 #10 CU G, 3/4"C	2W40	2 #8 CU & 1 #10 CU G, 3/4"C
3W45	3 #6 CU & 1 #10 CU G, 3/4"C	4W45	4 #6 CU & 1 #10 CU G, 1"C	2W45	2 #6 CU & 1 #10 CU G, 3/4"C
3W50	3 #6 CU & 1 #10 CU G, 3/4"C	4W50	4 #6 CU & 1 #10 CU G, 1"C	2W50	2 #6 CU & 1 #10 CU G, 3/4"C
3W60	3 #4 CU & 1 #10 CU G, 1 1/4"C	4W60	4 #4 CU & 1 #10 CU G, 1 1/4"C	2W60	2 #4 CU & 1 #10 CU G, 3/4"C
3W70	3 #4 CU & 1 #8 CU G, 1 1/4"C	4W70	4 #4 CU & 1 #8 CU G, 1 1/4"C	2W70	2 #4 CU & 1 #8 CU G, 1"C
3W80	3 #3 CU & 1 #8 CU G, 1 1/4"C	4W80	4 #3 CU & 1 #8 CU G, 1 1/4"C	2W80	4 #3 CU & 1 #8 CU G, 1 1/2"C
3W90	3 #2 CU & 1 #8 CU G, 1 1/4"C	4W90	4 #2 CU & 1 #8 CU G, 1 1/4"C	2W90	4 #2 CU & 1 #8 CU G, 1 1/2"C
3W100	3 #1/0 AL & 1 #6 AL G, 1 1/2"C	4W100	4 #1/0 AL & 1 #6 AL G, 2"C	2W100	2 #1/0 AL & 1 #6 AL G, 1 1/4"C
3W110	3 #1/0 AL & 1 #4 AL G, 1 1/2"C	4W110	4 #1/0 AL & 1 #4 AL G, 2"C		
3W125	3 #1/0 AL & 1 #4 AL G, 1 1/2"C	4W125	4 #1/0 AL & 1 #4 AL G, 2"C		
3W150	3 #3/0 AL & 1 #4 AL G, 2"C	4W150	4 #3/0 AL & 1 #4 AL G, 2"C		
3W175	3 #4/0 AL & 1 #4 AL G, 2"C	4W175	4 #4/0 AL & 1 #4 AL G, 2 1/2"C		
3W200	3 #250KCM AL & 1 #4 AL G, 2"C	4W200	4 #250KCM AL & 1 #4 AL G, 2 1/2"C		
3W225	3 #300KCM AL & 1 #2 AL G, 2 1/2"C	4W225	4 #300KCM AL & 1 #2 AL G, 3"C		
3W250	3 #350KCM AL & 1 #2 AL G, 2 1/2"C	4W250	4 #350KCM AL & 1 #2 AL G, 3"C		
3W300	3 #500KCM AL & 1 #2 AL G, 3"C	4W300	4 #500KCM AL & 1 #2 AL G, 3 1/2"C		
3W350	(2) 3 #4/0 AL & 1 #1 AL G, 2"C	4W350	(2) 4 #4/0 AL & 1 #1 AL G, 2 1/2"C		
3W400	(2) 3 #250KCM AL & 1 #1 AL G, 2 1/2"C	4W400	(2) 4 #250KCM AL & 1 #1 AL G, 2 1/2"C		
3W450	(2) 3 #300KCM AL & 1 #1/0 AL G, 2 1/2"C	4W450	(2) 4 #300KCM AL & 1 #1/0 AL G, 3"C		
3W500	(2) 3 #350KCM AL & 1 #1/0 AL G, 2 1/2"C	4W500	(2) 4 #350KCM AL & 1 #1/0 AL G, 3"C		
3W600	(2) 3 #500KCM AL & 1 #2/0 AL G, 3"C	4W600	(2) 4 #500KCM AL & 1 #2/0 AL G, 3 1/2"C		
3W700	(3) 3 #300KCM AL & 1 #3/0 AL G, 2 1/2"C	4W700	(3) 4 #300KCM AL & 1 #3/0 AL G, 3"C		
3W800	(3) 3 #400KCM AL & 1 #3/0 AL G, 3"C	4W800	(3) 4 #400KCM AL & 1 #3/0 AL G, 3"C		
3W900	(3) 3 #500KCM AL & 1 #4/0 AL G, 3"C	4W900	(3) 4 #500KCM AL & 1 #4/0 AL G, 3 1/2"C		
3W1000	(4) 3 #350KCM AL & 1 #4/0 AL G, 3"C	4W1000	(4) 4 #350KCM AL & 1 #4/0 AL G, 3"C		
3W1200	(4) 3 #500KCM AL & 1 #250KCM AL G, 3"C	4W1200	(4) 4 #500KCM AL & 1 #250KCM AL G, 3 1/2"C		
3W1600	(5) 3 #500KCM AL & 1 #350KCM AL G, 3"C	4W1600	(5) 4 #500KCM AL & 1 #350KCM AL G, 3 1/2"C		
3W2000	(7) 3 #500KCM AL & 1 #400KCM AL G, 3"C	4W2000	(7) 4 #500KCM AL & 1 #400KCM AL G, 3 1/2"C		
3W2500	(8) 3 #500KCM AL & 2 #300KCM AL G, 3 1/2"C	4W2500	(8) 4 #500KCM AL & 2 #300KCM AL G, 3 1/2"C		
3W3000	(10) 3 #500KCM AL & 2 #300KCM AL G, 3 1/2"C	4W3000	(10) 4 #500KCM AL & 2 #300KCM AL G, 3 1/2"C		
3W4000	(13) 3 #500KCM AL & 2 #400KCM AL G, 3 1/2"C	4W4000	(13) 4 #500KCM AL & 2 #400KCM AL G, 4"C		

TRANSFORMER SCHEDULE

KVA	480 V PRIMARY		208/120 V SECONDARY		CU GROUND ELECTRODE CONDUCTOR (AWG)
	CB	FEEDER	CB	FEEDER (NON K-RATED)	
15	30/3	3 #10 & 1 #10G, 3/4"C	50/3	4 #6 & 1 #6G, 1"C	#8
30	50/3	3 #6 & 1 #10G, 1"C	100/3	4 #1 & 1 #6G, 2"C	#6
45	70/3	3 #4 & 1 #8G, 1-1/4"C	150/3	4 #1/0 & 1 #6G, 2"C	#6
75	125/3	3 #1/0 & 1 #6G, 2"C	225/3	4 #4/0 & 1 #2G, 2-1/2"C	#2
112.5	175/3	3 #2/0 & 1 #6G, 2"C	400/3	4 #500KCM & 1 #1/0G, 3-1/2"C	1/0
150	225/3	3 #4/0 & 1 #4G, 2-1/2"C	500/3	(2) 4 #250KCM & 1 #2G, 3"C	2/0
225	350/3	3 #500KCM & 1 #2G, 3-1/2"C	800/3	(2) 4 #500KCM & 1 #1/0G, 4"C	2/0
300	500/3	(2) 3 #250KCM & 1 #2G, (2) 2-1/2"C	1000/3	(3) 4 #500KCM & 1 #2/0G, 4"C	3/0
500	800/3	(2) 3 #500KCM & 1 #1/0 G, 3-1/2"C	1600/3	(5) 4 #500KCM & 1 #4/0 G, 4"C	3/0
750	1200/3	(4) 3 #350KCM & 1 #3/0 G, 3"C	2000/3	(6) 4 #500KCM & 1 #250KCM G, 4"C	3/0
1000	1600/3	(5) 3 #500KCM & 1 #4/0 G, 3-1/2"C	4000/3	(11) 4 #500KCM & 1 #500KCM G, 4"C	3/0

MECHANICAL AND PLUMBING EQUIPMENT - ELECTRICAL CONNECTION SCHEDULE

EQUIPMENT CALLOUT			LOAD					CIRCUITING INFORMATION						DISCONNECT		STARTER		
TAG	#	DESCRIPTION	HP	KVA	FLA	LOAD TYPE	VOLTAGE	PANEL	CIRCUIT	OCP	POLES	ALTERNATE POWER (Y/N)	FEEDER SIZE	DIVISION	TYPE	DIVISION	TYPE	LEVEL
BEF	1	BATHROOM EXHAUST FAN	0.00 hp	0.0	0.3 A	C	120 V	PNL-LBA1	51	20 A	1	No	2W20	DIV 26	SWITCH	N/A	N/A	Level 1,5
BEF	1	BATHROOM EXHAUST FAN	0.00 hp	0.0	0.3 A	C	120 V	PNL-LBA1	53	20 A	1	No	2W20	DIV 26	SWITCH	N/A	N/A	Level 1,5
BEF	2	BATHROOM EXHAUST FAN	0.00 hp	0.1	0.4 A	C	120 V	PNL-LBA1	27	20 A	1	No	2W20	DIV 26	SWITCH	N/A	N/A	Level 1,5
BEF	2	BATHROOM EXHAUST FAN	0.00 hp	0.1	0.4 A	C	120 V	PNL-LBA1	38	20 A	1	No	2W20	DIV 26	SWITCH	N/A	N/A	Level 1,5
CP	1	CIRC PUMP	0.13 hp	0.0	1.1 A	M	120 V	PNL L11A	13	20 A	1	No	2W20	DIV 26	SWITCH	DIV 23	SWITCH	Roof
CP	2	CIRC PUMP	0.04 hp	0.0	0.8 A	M	120 V	PNL L11A	15	20 A	1	No	2W20	DIV 26	SWITCH	DIV 23	SWITCH	Roof
CP	3	CIRC PUMP	0.04 hp	0.0	1.0 A	M	120 V	PNL L11A	8	20 A	1	No	2W20	DIV 26	SWITCH	DIV 23	SWITCH	Level 7
ECH	1	ELECTRIC WALL HEATER	0.00 hp	2.0	9.6 A	M	208 V	PNL-LBA1	43,45	20 A	2	No	2W20	DIV 26	SWITCH	N/A	N/A	BASEMENT
EF	1	EXHAUST FAN	0.75 hp	1.7	1.6 A	M	480 V	PNL-SH11A	21,23,25	20 A	3	No	3W20	DIV 23	VFD	DIV 23	VFD	Roof
EF	1	EXHAUST FAN	0.75 hp	1.7	1.6 A	M	480 V	PNL-SH11A	27,29,31	20 A	3	No	3W20	DIV 23	VFD	DIV 23	VFD	Roof
EF	1	EXHAUST FAN	0.75 hp	1.7	1.6 A	M	480 V	PNL-SH11A	27,29,31	20 A	3	No	3W20	DIV 23	VFD	DIV 23	VFD	Roof
EF	1	EXHAUST FAN	0.75 hp	1.7	1.6 A	M	480 V	PNL-SH11A	26,28,30	20 A	3	No	3W20	DIV 23	VFD	DIV 23	VFD	Roof
EF	1	EXHAUST FAN	0.75 hp	1.7	1.6 A	M	480 V	PNL-SH11A	26,28,30	20 A	3	No	3W20	DIV 23	VFD	DIV 23	VFD	Roof
EF	1	EXHAUST FAN	0.75 hp	1.7	1.6 A	M	480 V	PNL-SH11A	26,28,30	20 A	3	No	3W20	DIV 23	VFD	DIV 23	VFD	Roof
EF	1	EXHAUST FAN	0.75 hp	1.7	1.6 A	M	480 V	PNL-SH11A	26,28,30	20 A	3	No	3W20	DIV 23	VFD	DIV 23	VFD	Roof
EF	2	EXHAUST FAN	0.50 hp	0.8	1.1 A	M	480 V	PNL-SH11A	21,23,25	20 A	3	No	3W20	DIV 23	VFD	DIV 23	VFD	Roof
EF	2	EXHAUST FAN	0.50 hp	0.8	1.0 A	M	480 V	PNL-SH11A	27,29,31	20 A	3	No	3W20	DIV 23	VFD	DIV 23	VFD	Roof
EF	2	EXHAUST FAN	0.50 hp	0.8	1.1 A	M	480 V	PNL-SH11A	33,35,37	20 A	3	No	3W20	DIV 23	VFD	DIV 23	VFD	Roof
EF	2	EXHAUST FAN	0.50 hp	0.8	1.1 A	M	480 V	PNL-SH11A	33,35,37	20 A	3	No	3W20	DIV 23	VFD	DIV 23	VFD	Roof
EF	2	EXHAUST FAN	0.50 hp	0.8	1.1 A	M	480 V	PNL-SH11A	33,35,37	20 A	3	No	3W20	DIV 23	VFD	DIV 23	VFD	Roof
EF	2	EXHAUST FAN	0.50 hp	0.8	1.1 A	M	480 V	PNL-SH11A	26,28,30	20 A	3	No	3W20	DIV 23	VFD	DIV 23	VFD	Roof
EF	3	EXHAUST FAN	0.25 hp	0.5	1.0 A	M	480 V	PNL-SH11A	21,23,25	20 A	3	No	3W20	DIV 23	VFD	DIV 23	VFD	Roof
EF	3	EXHAUST FAN	0.25 hp	0.5	1.0 A	M	480 V	PNL-SH11A	21,23,25	20 A	3	No	3W20	DIV 23	VFD	DIV 23	VFD	Roof
EF	4	EXHAUST FAN	0.33 hp	0.5	1.0 A	M	480 V	PNL-SH11A	21,23,25	20 A	3	No	3W20	DIV 23	VFD	DIV 23	VFD	Roof
EF	5	EXHAUST FAN	0.75 hp	1.7	1.6 A	M	480 V	PNL-SH11A	21,23,25	20 A	3	No	3W20	DIV 23	VFD	DIV 23	VFD	Roof
EF	6	EXHAUST FAN	0.10 hp	0.5	4.0 A	M	120 V	PNL-SL11A	15	20 A	1	No	2W20	DIV 23	VFD	DIV 23	VFD	Roof
EF	7	EXHAUST FAN	0.75 hp	0.0	1.6 A	M	120 V	PNL-LBA1	40	20 A	1	No	2W20	DIV 23	VFD	DIV 23	VFD	Level 1,5
EF	8	EXHAUST FAN	0.75 hp	0.2	1.6 A	M	120 V	L3A	10	20 A	1	No	2W20	DIV 23	VFD	DIV 23	VFD	Level 1
EF	9	EXHAUST FAN	0.75 hp	0.0	1.6 A	M	120 V	L3A	12	20 A	1	No	2W20	DIV 23	FUSED	DIV 23	THERMOSTAT	BASEMENT
EF	10	EXHAUST FAN	0.75 hp	1.7	1.6 A	M	480 V	PNL-SH11A	33,35,37	20 A	3	No	3W20	DIV 23	VFD	DIV 23	VFD	Roof
EF	X	EXHAUST FAN	0.75 hp	1.7	1.6 A	M	480 V	PNL-SH11A	27,29,31	20 A	3	No	3W20	DIV 23	VFD	DIV 23	VFD	Roof
EHWH	1	ELECTRIC HOT WATER HEATER	0.00 hp	18.0	21.6 A	C	480 V	PNL-H11A	1,3,5	30 A	3	No	3W30	DIV 26	FUSED	N/A	N/A	Level 7
EPF	1	ELEVATOR PRESSURIZATION FAN	10.00 hp	11.6	14.0 A	M	480 V	PNL-SH11A	7,9,11	25 A	3	Yes	3W30	DIV 23	VFD	DIV 23	VFD	Roof
EPF	2	ELEVATOR PRESSURIZATION FAN	10.00 hp	11.6	14.0 A	M	480 V	PNL-SH11A	2,4,6	25 A	3	Yes	3W30	DIV 23	VFD	DIV 23	VFD	Roof
EWH	1	ELECTRIC WALL HEATER	0.00 hp	1.2	9.6 A	C	120 V	PNL-LBA1	2	20 A	1	No	2W20	DIV 26	SWITCH	N/A	N/A	BASEMENT
EWH	1	ELECTRIC WALL HEATER	0.00 hp	1.2	9.6 A	C	120 V	PNL-LBA1	1	20 A	1	No	2W20	DIV 26	SWITCH	N/A	N/A	Level 1
EWH	1	ELECTRIC WALL HEATER	0.00 hp	1.2	9.6 A	C	120 V	PNL-LBA1	10	20 A	1	No	2W20	DIV 26	SWITCH	N/A	N/A	Level 1
EWH	1	ELECTRIC WALL HEATER	0.00 hp	1.2	9.6 A	C	120 V	PNL-LBA1	47	20 A	1	No	2W20	DIV 26	SWITCH	N/A	N/A	BASEMENT
EWH	1	ELECTRIC WALL HEATER	0.00 hp	1.2	9.6 A	C	120 V	PNL-LBA1	44	20 A	1	No	2W20	DIV 26	SWITCH	N/A	N/A	Level 1,5
EWH	1	ELECTRIC WALL HEATER	0.00 hp	1.2	9.6 A	C	120 V	PNL-LBA1	46	20 A	1	No	2W20	DIV 26	SWITCH	N/A	N/A	Level 1,5
EWH	1	ELECTRIC WALL HEATER	0.00 hp	1.2	9.6 A	C	120 V	PNL-LBA1	48	20 A	1	No	2W20	DIV 26	SWITCH	N/A	N/A	Level 1,5
EWH	1	ELECTRIC WALL HEATER	0.00 hp	1.2	9.6 A	C	120 V	L3A	14	20 A	1	No	2W20	DIV 26	SWITCH	N/A	N/A	Level 1
EWH	1	ELECTRIC WALL HEATER	0.00 hp	1.2	9.6 A	C	120 V	L3A	16	20 A	1	No	2W20	DIV 26	SWITCH	N/A	N/A	Level 1
EWH	2	ELECTRIC WALL HEATER	0.00 hp	0.5	4.2 A	C	120 V	PNL-LBA1	5	20 A	1	No	2W20	DIV 26	SWITCH	N/A	N/A	Level 1
EWH	2	ELECTRIC WALL HEATER	0.00 hp	0.5	4.2 A	C	120 V	PNL-LBA1	3	20 A	1	No	2W20	DIV 26	SWITCH	N/A	N/A	Level 1
EWH	2	ELECTRIC WALL HEATER	0.00 hp	0.5	4.2 A	C	120 V	PNL-LBA1	8	20 A	1	No	2W20	DIV 26	SWITCH	N/A	N/A	Level 1
EWH	2	ELECTRIC WALL HEATER	0.00 hp	0.5	4.2 A	C	120 V	PNL-LBA1	6	20 A	1	No	2W20	DIV 26	SWITCH	N/A	N/A	Level 1,5
EWH	2	ELECTRIC WALL HEATER	0.00 hp	0.5	4.2 A	C	120 V	PNL-LBA1	49	20 A	1	No	2W20	DIV 26	SWITCH	N/A	N/A	Level 1,5
FCU	1,1	FAN COIL UNIT	0.00 hp	0.2	0.0 A	M	208 V	L3A	1,3	15 A	2	No	2W15	DIV 23	FUSED	DIV 23	THERMOSTAT	Level 1
FCU	1,2	FAN COIL UNIT	0.00 hp	0.2	0.0 A	M	208 V	L3A	5,7	15 A	2	No	2W15	DIV 23	FUSED	DIV 23	THERMOSTAT	Level 1
FCU	1,3	FAN COIL UNIT	0.00 hp	0.2	0.0 A	M	208 V	L3A	5,7	15 A	2	No	2W15	DIV 23	FUSED	DIV 23	THERMOSTAT	Level 1
FCU	1,4	FAN COIL UNIT	0.00 hp	0.2	0.0 A	M	208 V	L3A	1,3	15 A	2	No	2W15	DIV 23	FUSED	DIV 23	THERMOSTAT	Level 1
FCU	1,5	FAN COIL UNIT	0.00 hp	0.2	0.0 A	M	208 V	L3A	1,3	15 A	2	No	2W15	DIV 23	FUSED	DIV 23	THERMOSTAT	Level 1
FCU	1,6	FAN COIL UNIT	0.00 hp	0.2	0.0 A	M	208 V	L3A	2,4	15 A	2	No	2W15	DIV 23	FUSED	DIV 23	THERMOSTAT	BASEMENT
FCU	1,7	FAN COIL UNIT	0.00 hp	0.2	0.0 A	M	208 V	L3A	2,4	15 A	2	No	2W15	DIV 23	FUSED	DIV 23	THERMOSTAT	BASEMENT
FCU	1,8	FAN COIL UNIT	0.00 hp	0.2	0.0 A	M	208 V	L3A	2,4	15 A	2	No	2W15	DIV 23	FUSED	DIV 23	THERMOSTAT	BASEMENT
FCU	1,9	FAN COIL UNIT	0.00 hp	0.2	0.0 A	M	208 V	L3A	6,8	15 A	2	No	2W15	DIV 23	FUSED	DIV 23	THERMOSTAT	Level 2
FCU	1,10	FAN COIL UNIT	0.00 hp	0.2	0.0 A	M	208 V	L3A	6,8	15 A	2	No	2W15	DIV 23	FUSED	DIV 23	THERMOSTAT	Level 2
FCU	1,11	FAN COIL UNIT	0.00 hp	0.2	0.0 A	M	208 V	PNL L11A	33,35	15 A	2	No	2W15	DIV 23	FUSED	DIV 23	THERMOSTAT	Level 12
FOFS	1	FUEL OIL SUPPLY	0.00 hp	0.6	5.0 A	N	120 V	PNL-SL11A	14	20 A	1	Yes	2W20	DIV 26	SWITCH	DIV 26	SWITCH	Level 1
HP	1	HEAT PUMP	0.00 hp	1.7	13.2 A	M	208 V	PNL L11A	33,35	20 A	2	No	2W20	DIV 23	VFD	DIV 23	VFD	Roof
MAU	1	MAKE UP AIR UNIT	0.00 hp	9.4	11.4 A	M	480 V	PNL-H11A	13,15,17	20 A	3	No	3W20	DIV 23	INTEGRAL FUSED	DIV 23	FACTORY INSTALLED	Roof
PBP	1	PRESS BOOSTER PUMP	0.00 hp	20.7	25.0 A	M	480 V	PNL-HBA1	1,3,5	40 A	3	No	3W40	DIV 26	FUSED	DIV 26	FVNR	BASEMENT
SP	1	ELEVATOR SUMP PUMP	0.50 hp	1.2	10.3 A	M	120 V	PNL-LBA1	4	20 A	1	No	2W20	DIV 26	SWITCH	DIV 26	SWITCH	BASEMENT
SP	1	ELEVATOR SUMP PUMP	0.50 hp	1.2	10.3 A	M	120 V	L3A	19	20 A	1	No	2W20	DIV 26	SWITCH	DIV 26	SWITCH	Level 1,5
SPF	1	STAIR PRESSURIZATION FAN	10.00 hp	11.6	14.0 A	M	480 V	PNL-SH11A	1,3,5	25 A	3	Yes	3W30	DIV 23	VFD	DIV 23	VFD	Roof
SPF	2	STAIR PRESSURIZATION FAN	10.00 hp	11.6	14.0 A	M	480 V	PNL-SH11A	8,10,12	25 A	3	Yes	3W30	DIV 23	VFD	DIV 23	VFD	Roof
VRF	1	HEAT PUMP	0.00 hp	17.8	50.0 A	N	208 V	PNL L11A	2,4,6	70 A	3	No	3W70	DIV 23	FUSED	DIV 23		Roof

MECHANICAL AND PLUMBING EQUIPMENT - ELECTRICAL CONNECTION SCHEDULE- UNITS

EQUIPMENT CALLOUT			LOAD				CIRCUITING INFORMATION			DISCONNECT		STARTER		
TAG	#	DESCRIPTION	KVA	FLA	LOAD TYPE	VOLTAGE	OCP	POLES	FEEDER SIZE	DIVISION	TYPE	DIVISION	TYPE	NOTES
BEF	1		0	0 A	M	120 V	20	1	2W20	DIV 26	SWITCH	DIV 26	SWITCH	
PTHP	1		3	16 A	M	208 V	20	2	3W20	DIV 26	LOCKABLE BREAKER	DIV 23	THERMOSTAT	
RWH	1		1	4 A	M	208 V	20	2	3W20	DIV 26	LOCKABLE BREAKER	DIV 23	THERMOSTAT	

LRS ARCHITECTS
720 NW Davis 503.221.1121
Suite 300 503.221.2077
Portland OR 97209 www.lrsarchitects.com

LEVERARCHITECTURE
4713 N ALBINA AVE, PDX OR 97217
T 503 928 6040
www.leverarchitecture.com

CONSULTANT:

SAMATA
CONSULTING ENGINEERS LLC

PROJECT NUMBER: 215349

GRAND AVENUE APARTMENTS

1010 NE GRAND AVE. PORTLAND, OR 97232

SHEET TITLE:
ELECTRICAL SCHEDULES

DRAWN BY: -
DATE CREATED: -

1	Addendum 1	8/11/17
A	Plan Check Review	09.01.20 17

RECEIVED
SEP 06 2017
BDS
DOCUMENT SERVICES

SHEET:
E001
PERMIT SET
07-14-2017

LRS Architects, Inc. ©2017

LIGHTING CONTROL SCHEDULE - DIMMING

RELAY ZONE	DESCRIPTION	OS	VS	TC ON	TC OFF	PC ON	PC OFF	DIMMING	OVERRIDE SWITCH	NOTES
-	SPARE									
R2	RETAIL ENTRANCE					X	X	X	X	
R3	EXTERIOR ALLEY					X	X	X	X	
E1	EMERGENCY LIGHTING STAIR 1	X						X		1,2,3
E2	EMERGENCY LIGHTING STAIR 2	X						X		1,2
E3	EMERGENCY NORTH AND SOUTH ENTRANCE					X	X	X	X	1
E4	EMERGENCY EXTERIOR ALLEY					X	X	X	X	1
E5	EMERGENCY LOBBY DAYLIGHTING					X	X	X	X	1

NOTES:

1. PROVIDE UL 924 DEVICE FOR CONTROL OF ALL EMERGENCY FIXTURES ON THIS RELAY.

2. DETECTION BY ANY OCCUPANCY SENSOR IN THIS STAIRWELL WILL BRING THE LIGHTING ON THIS RELAY TO FULL OUTPUT. AFTER 10 MINUTES WITHOUT DETECTION, THE LIGHTING WILL DIM TO 10% OUTPUT.

3. PROVIDE PHYSICAL BARRIER BETWEEN NORMAL AND EMERGENCY RELAYS.

BASIS OF DESIGN IS GREENGATE CONTROLKEEPER 4A. NETWORK PANELS TOGETHER TO PROVIDE QUANTITY OF CONTROL RELAYS SHOWN.

LIGHTING CONTROL SCHEDULE - NON-DIMMING

RELAY ZONE	DESCRIPTION	OS	VS	TC ON	TC OFF	PC ON	PC OFF	DIMMING	OVERRIDE SWITCH	NOTES
R4	SITE TYPE 'E1'					X	X		X	
R5	LOBBY			X	X				X	
R6	SITE TYPE 'E3'					X	X		X	
R7	SITE TYPE 'E4'					X	X		X	
-	SPARE									
-	SPARE									
R8	MAIL ROOM			X	X				X	2
E7	EMERGENCY BASEMENT CORRIDOR	X							X	1

NOTES:

1. PROVIDE UL 924 DEVICE FOR CONTROL OF ALL EMERGENCY FIXTURES ON THIS RELAY.

2. PROVIDE PHYSICAL BARRIER BETWEEN NORMAL AND EMERGENCY RELAYS.

BASIS OF DESIGN IS GREENGATE CONTROLKEEPER 4. NETWORK PANELS TOGETHER TO PROVIDE QUANTITY OF CONTROL RELAYS SHOWN.

LUMINAIRE SCHEDULE

TAG	SIZE/DESCRIPTION	FINISH	LAMP INFORMATION			DIMMABLE	BALLAST DESCRIPTION	TOTAL VA	MANUFACTURER/CATALOG NUMBER	VOLT	MOUNTING	RECESS DEPTH	LUMINAIRE REMARKS
			TYPE	QTY.	LAMP								
DECORATIVE LIGHTING													
D1	NOM. 10" DIA X 8" TALL DECORATIVE PENDANT, 5 PENDANTS FROM A SINGLE CANOPY, WITH 35#' LONG CORD, WITH CEILING MOUNTING CUP, ALUMINUM HOUSING, POLYCARBONATE LENS	CPA	LED	EACH	1000 LUMENS, 927 SERIES	YES, TRIAC	INTEGRAL DIMMABLE DRIVER	20	FLOS AIM SERIES OR APPROVED EQUAL	120	SUSPENDED, HEIGHT TBD		
INTERIOR LIGHTING													
A	NOM. 5" DIA ROUND SURFACE MOUNTED DOWNLIGHT, ONE PIECE INJECTION MOLDED PLASTIC FLANGE, HIGH TRANSMITTANCE LENS, REFER TO CUTSHEET FOR COMPATIBLE J-BOX FOR MOUNTING	CPA	LED		650 LUMENS, 830 SERIES	NO	NON-DIMMING DRIVER	10	PHILIPS SLIM SURFACE SSR SERIES OR APPROVED EQUAL	MVOLT	CEILING		
B2	STEEL RECTILINEAR LED FIXTURE WITH ROUND FROSTED ACRYLIC LENS	CPA	LED		1180 LUMENS, 84 CRI 3000K	NO	NON-DIMMING DRIVER	10	BARTCO BLT210 SERIES OR APPROVED EQUAL	MVOLT	WALL / SURFACE		
L1	NOM. 3" WIDE X 3" TALL X 4' LONG STRIP, STEEL HOUSING, WITH ROUND ACRYLIC LENS, WITH CHAIN SUSPENSION KIT IF/WHERE NECESSARY	WHITE	LED		3000 LUMENS, 830 SERIES	YES, 0-10V	INTEGRAL DIMMABLE DRIVER	33	LITHONIA ZLTD SERIES OR APPROVED EQUAL	MVOLT	SURFACE / SUSPENDED		
L1.8	NOM. 3" WIDE X 3" TALL X 8' LONG STRIP, STEEL HOUSING, WITH ROUND ACRYLIC LENS, WITH CHAIN SUSPENSION KIT IF/WHERE NECESSARY	WHITE	LED		3000 LUMENS, 830 SERIES	YES, 0-10V	INTEGRAL DIMMABLE DRIVER	33	LITHONIA ZLTD SERIES OR APPROVED EQUAL	MVOLT	SURFACE / SUSPENDED		
L2	NOM. 4" DEEP X 5" TALL X 48" LONG STAIR LIGHT, STEEL HOUSING, HIGH PERFORMANCE RIBBED LENS, DIE-CAST ENDCAPS	WHITE	LED		4000 LUMENS, 830 SERIES	YES, 0-10V	INTEGRAL DIMMABLE DRIVER	40	LITHONIA WL4-40L MVOLT SERIES OR APPROVED EQUAL	MVOLT	WALL / CEILING		
L3	NOM. 5" DIA ROUND SURFACE MOUNTED DOWNLIGHT, ONE PIECE INJECTION MOLDED PLASTIC FLANGE, HIGH TRANSMITTANCE LENS, REFER TO CUTSHEET FOR COMPATIBLE J-BOX FOR MOUNTING	CPA	LED		650 LUMENS, 830 SERIES	YES, ELV	INTEGRAL DIMMABLE DRIVER	10	PHILIPS SLIM SURFACE SSR SERIES OR APPROVED EQUAL	MVOLT	CEILING		
L4	NOM. 8" WIDE X 2" TALL DIRECT INDIRECT PENDANT, 75% UP, 25% DOWN. STEEL HOUSING, RECTANGULAR SHAPE. RECTANGULAR ENDCAPS, HIGH PERFORMANCE ACRYLIC LENS, ADJUSTABLE AC CABLES, SINGLE CIRCUIT, LENGTH PER DRAWINGS	CPA	LED	PER 4 FT	6000 LUMENS, 830 SERIES	YES, 0-10V	INTEGRAL DIMMABLE DRIVER	50	LEDALITE 24-GS-L SERIES LEDALITE ESSLV	MVOLT	SUSPENDED, 8' AFF		
L5	NOM. 4.5" WIDE X 1" TALL UNDERCABINET LIGHT, ALUMINUM HOUSING, ACRYLIC LENS, WITH INTEGRAL ROCKER SWITCH, ADDITIONAL ACCESSORIES PER CONTRACTOR, LENGTH PER DRAWINGS, LINKABLE END TO END UP TO 450W TOTAL LOAD	CPA	LED	PER FT	300 LUMENS, 930 SERIES	YES, ELV	INTEGRAL DIMMABLE DRIVER	5	HALO HU10 SERIES OR APPROVED EQUAL	120	UNDERCABINET		
L6	NOM. 4" WIDE X 2" TALL INDIRECT ASYMMETRIC COVE, STEEL HOUSING, WITH 12" MAX ADJUSTABLE LENGTH SECTION ON EACH END OF RUN, SINGLE CIRCUIT, LENGTH PER DRAWINGS, IN 2FT MULTIPLES, VERY HIGH OUTPUT	WHITE	LED	PER FT	500 LUMENS, 830 SERIES	YES, 0-10V	INTEGRAL DIMMABLE DRIVER	5	FINELITE S11-LED-MP SERIES OR APPROVED EQUAL	MVOLT	SURFACE, SEE DETAIL		
L7	NOM. 60" WIDE X 28" TALL X 2" DEEP ILLUMINATED MIRROR AT PUBLIC BATHROOM, 3 VERTICAL LIGHT STRIPS BEHIND FROSTED GLASS	MIRROR	LED		3000K	YES	INTEGRAL DRIVER	32	IB MIRROR VERANO 60X28 SERIES OR APPROVED EQUAL	120	WALL, HEIGHT PER ELEVATIONS		
L7.1	NOM. 24" WIDE X 32" TALL X 2" DEEP ILLUMINATED MIRROR AT PUBLIC BATHROOM, 2 VERTICAL LIGHT STRIPS BEHIND FROSTED GLASS	MIRROR	LED		3000K	YES	INTEGRAL DRIVER	23	IB MIRROR VERANO 24X32 SERIES OR APPROVED EQUAL	120	WALL, HEIGHT PER ELEVATIONS		
L8	NOM. 2" DIA FIXED DOWNLIGHT, INSTALL FROM BELOW HOUSING, DIE-CAST ALUMINUM TRIM WITH SOFT ROUNDED EDGE, FLOOD 50 DEGREE SPOT BEAM, WITH SOLITE LENS	CPA	LED		1000 LUMENS, 930 SERIES	YES, TRIAC	REMOTE POWER SUPPLY CONNECTED TO HOUSING	19	LITELINE SIGMA 2 326031 SERIES OR APPROVED EQUAL	120	RECESSED	NOM. 6"	
L9	NOM. 3" TALL X 2" DIA DECORATIVE SOCKET PENDANT WITH FABRIC COVERED DECORATIVE CORD, WITH SURFACE MOUNTED CANOPY, WITH 6W MAX WATTAGE STICKER	CPA	LED	1	G-25 450 LUMENS, 2700K, GREEN CREATIVE	YES	SELF BALLASTED	6	NUD COLLECTION CLASSIC SERIES CORD COLOR PER ARCHITECT OR APPROVED EQUAL	120	SUSPENDED, HEIGHT TBD		
L10	NOM. 36" DIA X 4" TALL DECORATIVE DOWNLIGHT, SUSPENDED AT AN ANGLE, WITH FLAT SATINE LENS, MINIMAL PERIMETER EDGE, WITH ADJUSTABLE ANGLED AC CABLE SUSPENSION, WITH 5% UPLIGHT, WITH FLUSH CANOPY	CPA	LED			YES	SELF BALLASTED	77	DELTA	120			
L11	NOM. 6" DIA X 2.5" TALL DECORATIVE SURFACE MOUNT DOWN LIGHT, PRESSED GLASS SHADE. DIE-CAST BASE	CPA	LED		500 LUMENS, 830 SERIES	YES	INTEGRAL DIMMABLE DRIVER	12	TECH CIRQUE CEILING SMALL SERIES OR APPROVED EQUAL	MVOLT	CEILING		
X1	EXIT SIGN	DIE-CAST ALUMINUM	LED					1	SURE-LITES TPX SERIES OR APPROVED EQUAL	MVOLT	WALL/CEILING		
EXTERIOR LIGHTING													
E1	EXTERIOR TAPE, 7 DIODES PER INCH, CUTABLE EVERY INCH, IP67 RATED, WITH NOM. 3/4" WIDE X 1/2" TALL ALUMINUM CHANNEL, WITH WHITE LENS, LENGTH PER DRAWINGS	CPA	LED	PER FT	650 LUMENS, 930 SERIES	YES, UNIVERSAL	REMOTE DIMMABLE POWER SUPPLY	5	VOLT DV3K-RC-24V SERIES WITH VOLT CH-002-A SERIES CHANNEL OR APPROVED EQUAL	24	SURFACE, SEE DETAIL		
E2	EXTERIOR TAPE, 7 DIODES PER INCH, CUTABLE EVERY INCH, IP67 RATED, WITH NOM. 2.5" WIDE X 1.25" TALL ALUMINUM CHANNEL, WITH WHITE LENS, FIELD CUTABLE, LENGTH PER DRAWINGS	CPA	LED	PER FT	650 LUMENS, 930 SERIES	YES, UNIVERSAL	REMOTE DIMMABLE POWER SUPPLY	5	VOLT DV3K-RC-24V SERIES WITH VOLT CH-045-R-E SERIES CHANNEL OR APPROVED EQUAL	24	RECESSED	NOM. 1.5"	[1], [2]
E2.1	NOM. 6' LONG EXTERIOR TAPE, 7 DIODES PER INCH, CUTABLE EVERY INCH, IP67 RATED, WITH NOM. 2.5" WIDE X 1.25" TALL ALUMINUM CHANNEL, WITH WHITE LENS X 6' LONG, FIELD CUTABLE	CPA	LED	PER FT	650 LUMENS, 930 SERIES	YES, UNIVERSAL	REMOTE DIMMABLE POWER SUPPLY	5	VOLT DV3K-RC-24V SERIES WITH VOLT CH-045-R-E SERIES CHANNEL OR APPROVED EQUAL	24	RECESSED	NOM. 1.5"	[1]
E3	NOM. 3" DIA X 7' TALL LANDSCAPE FLOODLIGHT, GROUND MOUNTED ON 12" LONG LANDSCAPE MOUNTING STAKE. AIMABLE. IP65 RATED, ALUMINUM HOUSING, WIDE FLOOD 60 DEGREE BEAM, WITH HONEYCOMB BAFFLE, WITH "B" CAP / SNOOT	BLACK	LED	1	650 LUMENS, 840 SERIES	YES, TRIAC	INTEGRAL DIMMABLE POWER SUPPLY	12	BK LIGHTING DENALI DE-LED-X60-WFL / BK PPII SERIES ECOSENSE RISE F080-15-HO-40-B-60 W/ F080-LS-15-STK SERIES OR APPROVED EQUAL	24	WALL / SURFACE, SEE DETAIL		[3]
E4	NOM. 12" WIDE X 3" DEEP X 3" TALL FLOOD LIGHT, MOUNTING TBD, WITH ASYMMETRIC LOUVER, 70X70 BEAM, INDIVIDUAL UNITS, EXTERIOR IP66 RATED	BLACK / ANODIZE ALUMINUM	LED	PER FT	700 LUMENS, 840 SERIES	YES	INTEGRAL DIMMABLE POWER SUPPLY	8	ECOSENSE TROV L50-E-12-08 SERIES WITH ECOSENSE LV-L50-ASYM LOUVER SERIES OR APPROVED EQUAL	UNV	GROUND		
REMOTE DRIVERS AND TRANSFORMERS													
E1 / E2 / E2.1	VOLT LIGHTING UNIVERSAL POWER SUPPLY							96	VOLT ULV96 SERIES	120			
E3	NOM. 9" LONG X 4" WIDE X 3" TALL REMOTE JUNCTION BOX POWER SUPPLY, RECTANGULAR CAMLOCK CANOPY, DIMMABLE								BK PMQRM-CT-D12INC SERIES	277	SURFACE, SEE DETAIL		

GENERAL NOTES:

A. ALL FLUORESCENT LAMPS TO BE 3000 KELVIN COLOR TEMPERATURE, 80+ SERIES CRI UNLESS OTHERWISE NOTED

B. PRODUCT NUMBERS SHOWN ARE ASSOCIATED WITH THE FIRST MANUFACTURER LISTED ON THE LUMINAIRE SCHEDULE FOR EACH LUMINAIRE TYPE. ALL OTHER LISTED MANUFACTURERS ARE APPROVED, BUT MUST MEET ALL REQUIREMENTS OF SPECIFIED ITEM. CONTRACTOR TO SUBMIT CUTSHEETS OF ALTERNATE OR APPROVED MANUFACTURERS PRODUCT ALONG WITH CUTSHEETS OF SPECIFIED FOR REVIEW AND APPROVAL BY THE LIGHTING DESIGNER

C. CATALOG NUMBERS DO NOT INCLUDE HANGER BARS AND/OR OTHER REQUIRED MOUNTING ACCESSORIES. CONTRACTOR IS RESPONSIBLE FOR DETERMINING AND PROVIDING THESE AND ALL OTHER PARTS, INCLUDING LAMPS, BALLASTS, TRANSFORMERS, CABLES, ETC. NECESSARY FOR A COMPLETE, PROPER, AND CODE COMPLYING INSTALLATION

D. CONTRACTOR TO VERIFY CEILING THICKNESS AND PROVIDE REQUIRED LUMINAIRE MOUNTING BRACKETS AND TRIMS FOR ALL FIXTURE TYPES

E. CONTRACTOR TO VERIFY ALL VOLTAGE PRIOR TO ORDERING FIXTURES

F. X OR XX = OPTIONS PER CONTRACTOR OR AS DESCRIBED. CPA = COLOR PER ARCHITECT, QTY = QUANTITY, EC = ELECTRICAL CONTRACTOR, L=LED LUMINAIRE, F=FLUORESCENT LUMINAIRE, A=INCANDESCENT/HALOGEN LUMINAIRE, D=DECORATIVE LUMINAIRE, E=EXTERIOR LUMINAIRE

LUMINAIRE REMARKS:

[1] CONTRACTOR TO FIELD VERIFY DIMENSIONS PRIOR TO ORDERING AND PROVIDE APPROPRIATE FIXTURE AND EXTRUSION LENGTH

[2] ALUMINUM CHANNEL AVAILABLE IN 1M OR 2M LONG MODULES, CONTRACTOR TO ORDER APPROPRIATE LENGTH AND QTY AS NEEDED; CONTRACTOR TO VERIFY WITH FACTORY MAXIMUM RUN LENGTH OF TAPE PER A SINGLE DRIVER; IF TOTAL RUN LENGTH IS LONGER THAN MAXIMUM TAPE LENGTH THAT CAN BE POWERED BY A SINGLE DRIVER, SPLIT TOTAL RUN LENGTH IN TWO EQUAL SEGMENTS; IF TOTAL RUN CAN BE POWERED BY A SINGLE DRIVER, PROVIDE WITH SINGLE POWER SUPPLY; REFER TO SPEC SHEET CHART FOR POWER CONSUMPTION BASED ON TOTAL RUN LENGTH

[3] DESCRIPTION BASED ON FIRST NAME SPEC; BK FIXTURE REQUIRES A REMOTE TRANSFORMER; ECOSENSE FIXTURE IS UNIVERSAL VOLTAGE; CONTRACTOR TO ADVISE ON FINAL PRODUCT TO BE USED AND COORDINATE MOUNTING DETAIL WITH LIGHTING DESIGNER AND LANDSCAPE ARCHITECT; FOR BK FIXTURE, CONTRACTOR TO ORDER REQUIRED CONFIGURATION AND STABILITY FLANGE, IF REQUIRED; PROVIDE WITH SINGLE HOLE CAP AND DIMMABLE PWOER SUPPLY

LRS ARCHITECTS
720 NW Davis 503.221.1121
Suite 300 503.221.2077
Portland OR 97209 www.lrsarchitects.com

REGISTERED PROFESSIONAL ENGINEER #14350 JENNIFER K. STREB OREGON JUNE 2, 2010
EXP. DATE: 6/30/2018

LEVERARCHITECTURE
4713 N ALBINA AVE, PDX OR 97217
T 503 928 6040
www.leverarchitecture.com

CONSULTANT:

SAMATA CONSULTING ENGINEERS LLC

PROJECT NUMBER: *215349*

GRAND AVENUE APARTMENTS

1010 NE GRAND AVE. PORTLAND, OR 97232

SHEET TITLE:
LUMINAIRE SCHEDULE

DRAWN BY: *SCE*
DATE CREATED: *7/14/17*

SHEET:
E002
PERMIT SET
07-14-2017

LRS Architects, Inc. ©2017

GENERAL NOTES

1. REFER TO CIVIL DRAWINGS FOR EXACT LOCATION OF VAULT. CONFIRM REQUIREMENTS WITH PP&L.
2. REFER TO E002 FOR LIGHTING CONTROL SCHEDULE.
3. ALL SITE LUMINAIRES CIRCUITED TO PANEL HBA1.

SHEET NOTES (X)

1. PROVIDE (2) 4" CONDUITS FOR TELECOM SERVICE. EXTEND CONDUITS TO TELECOM VAULT. VERIFY VAULT LOCATION AND COORDINATE WORK WITH TELECOM UTILITY ENGINEERING DEPARTMENT.
2. PROVIDE (12) 6" CONDUITS PER PP&L REQUIREMENTS.
3. PROVIDE POWER SUPPLY FOR 24V LUMINAIRES. CIRCUIT NO MORE THAN 86W TO EACH POWER SUPPLY.
4. PROVIDE POWER PIPE INTEGRAL DRIVER AND CONNECT TO CONTROL RELAY AND CIRCUIT SHOWN. CONFIRM REQUIREMENTS WITH MANUFACTURER PRIOR TO ROUGHIN.

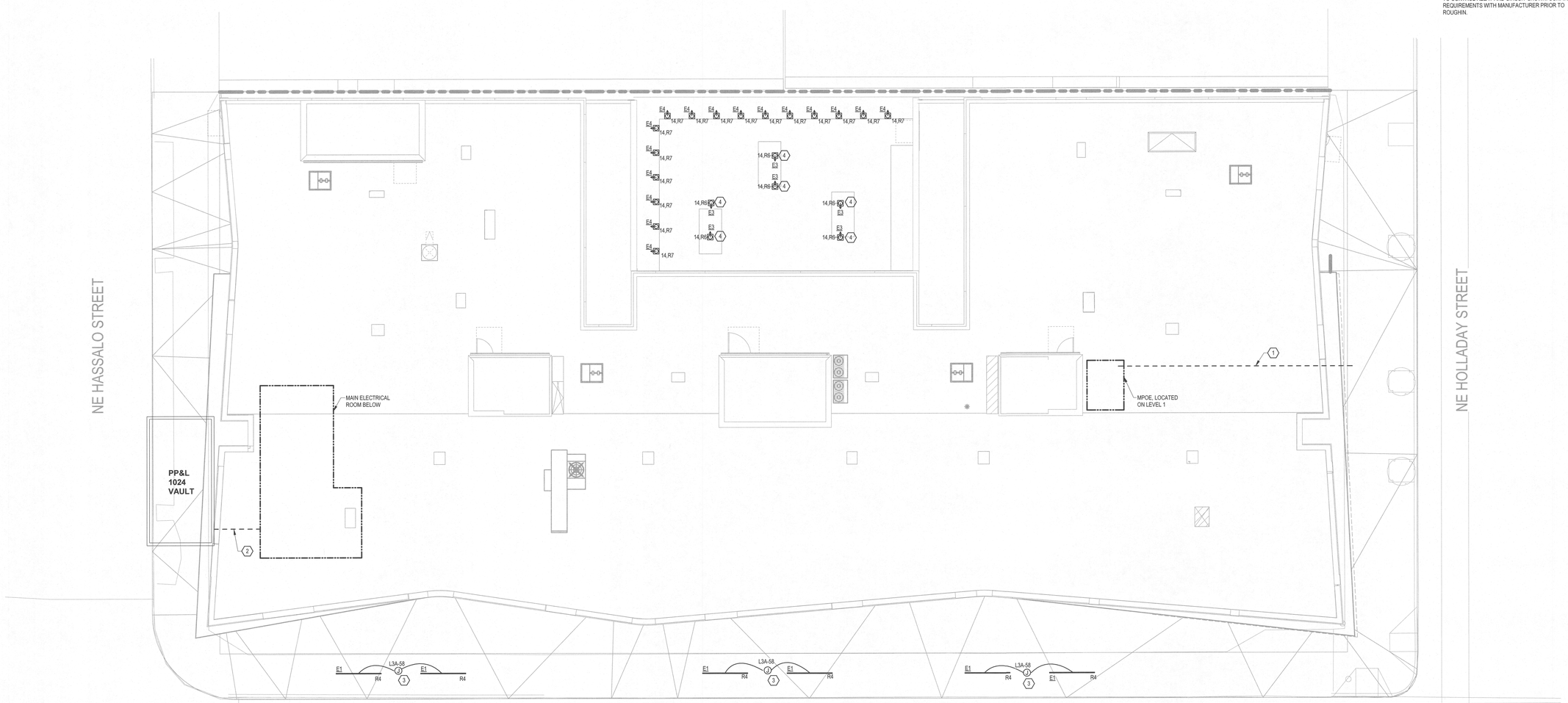

1 ELECTRICAL SITE PLAN
1/8" = 1'-0"

LRS ARCHITECTS
720 NW Davis 503.221.1121
Suite 300 503.221.2077
Portland OR 97209 www.lrsarchitects.com

REGISTERED PROFESSIONAL ENGINEER #74350 JENNIFER K. STEEB OREGON JUNE 2, 2010

EXP. DATE: 6/30/2018

LEVERARCHITECTURE
4713 N ALBINA AVE, PDX OR 97217
T 503 928 6040
www.leverarchitecture.com

CONSULTANT:

SAMATA CONSULTING ENGINEERS LLC

PROJECT NUMBER: *215349*

GRAND AVENUE APARTMENTS

1010 NE GRAND AVE. PORTLAND, OR 97232

SHEET TITLE:
ELECTRICAL SITE PLAN

DRAWN BY: *Author*
DATE CREATED: *03/16/17*

SHEET:
E101
PERMIT SET
07-14-2017

LRS Architects, Inc ©2017

GENERAL NOTES

A. CIRCUIT ALL FSD'S ON THIS LEVEL TO PNL-LBA1-13. PROVIDE NO MORE THAN 10 FSD'S PER CIRCUIT. REFERENCE MECHANICAL DRAWINGS FOR LOCATIONS.

B. ALL NORMAL LUMINAIRES ON THIS FLOOR CIRCUITED TO PANEL HBA1.

C. ALL EMERGENCY LUMINAIRES ON THIS FLOOR CIRCUITED TO PANEL EH1A.

D. COORDINATE TAMPER AND FLOW SWITCH LOCATIONS WITH FIRE PROTECTION CONTRACTOR PRIOR TO ROUGH-IN.

E. DIM STAIRWELL LUMINAIRES TO 10% BRIGHTNESS WHEN OCCUPANCY IS NOT DETECTED. TYPE L2 FIXTURES CONTROLLED VIA INTEGRAL OCCUPANCY SENSOR.

F. REFER TO E002 FOR LIGHTING CONTROL SCHEDULE.

G. ALL RECEPTACLES ON THIS LEVEL CIRCUITED TO PNL-LBA1 UNLESS OTHERWISE NOTED.

SHEET NOTES (X)

1. INSTALL FIRE PUMP CONTROLLER FURNISHED BY FIRE PROTECTION CONTRACTOR. CONNECT TO FIRE PUMP MOTOR. COORDINATE REQUIREMENTS WITH FIRE PROTECTION CONTRACTOR.
2. PROVIDE 2-WAY COMMUNICATION DEVICE. COORDINATE EXACT LOCATION WITH ARCHITECT PRIOR TO ROUGH-IN.
3. PROVIDE 120V, LED ENCLOSED LINEAR STRIP LIGHT. CONNECT PIT LIGHTING TO LINE SIDE OF GFCI RECEPTACLE.
4. MOUNT PIT LIGHT SWITCH ADJACENT TO LADDER AND USE ILLUMINATED HANDLE TYPE.

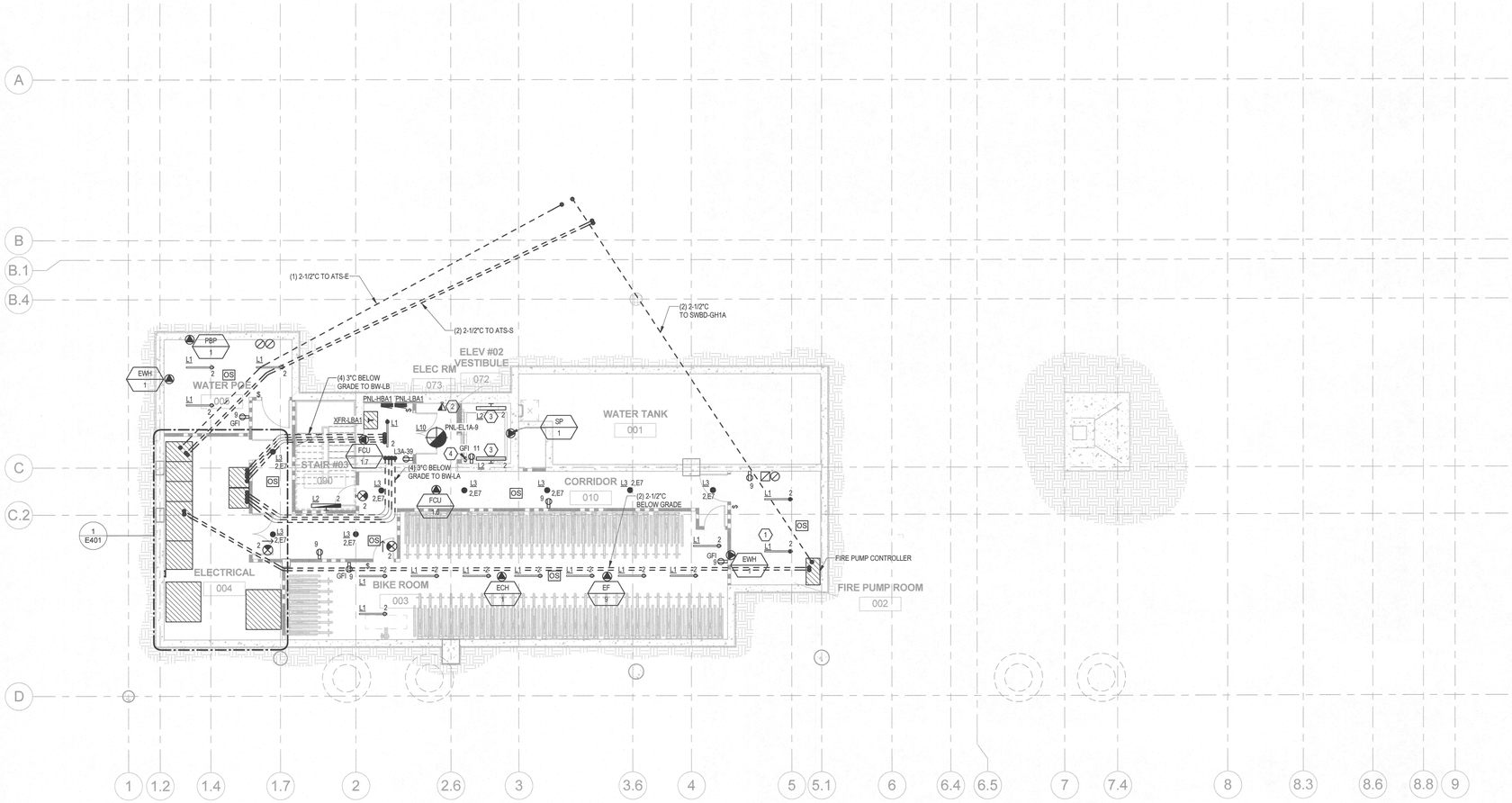

1 BASEMENT ELECTRICAL FLOOR PLAN
1/8" = 1'-0"

LRS ARCHITECTS
720 NW Davis 503.221.1121
Suite 300 503.221.2077
Portland OR 97209 www.lrsarchitects.com

REGISTERED PROFESSIONAL ENGINEER #74350 OREGON JUNE 2, 2010 JENNIFER K. STREB
EXP. DATE: 6/30/2018

LEVERARCHITECTURE
4713 N ALBINA AVE, PDX OR 97217
T 503 928 6040
www.leverarchitecture.com

CONSULTANT:

SAMATA CONSULTING ENGINEERS LLC

PROJECT NUMBER: 215349

GRAND AVENUE APARTMENTS

1010 NE GRAND AVE. PORTLAND, OR 97232

SHEET TITLE:

BASEMENT ELECTRICAL FLOOR PLAN

DRAWN BY: SCE
DATE CREATED: 06/21/17

SHEET:
E300
PERMIT SET
07-14-2017

LRS Architects, Inc. ©2017

BIM 360://NE Grand_Samata/Grand Ave Apts_Elec_V17.rvt
7/12/2017 8:27:03 PM

GENERAL NOTES

A. CIRCUIT ALL FSD'S ON THIS LEVEL TO PNL-LBA1-24. PROVIDE NO MORE THAN 10 FSD'S PER CIRCUIT. REFERENCE MECHANICAL DRAWINGS FOR LOCATIONS.

B. ALL NORMAL LUMINAIRES ON THIS FLOOR CIRCUITED TO PANEL HBA1 UON.

C. ALL EMERGENCY LUMINAIRES ON THIS FLOOR CIRCUITED TO PANEL EH1A UON.

D. COORDINATE TAMPER AND FLOW SWITCH LOCATIONS WITH FIRE PROTECTION CONTRACTOR PRIOR TO ROUGH-IN.

E. DIM STAIRWELL LUMINAIRES TO 10% BRIGHTNESS WHEN OCCUPANCY IS NOT DETECTED. TYPE L2 FIXTURES CONTROLLED VIA INTEGRAL OCCUPANCY SENSOR.

F. REFER TO E002 FOR LIGHTING CONTROL SCHEDULE.

G. ALL RECEPTACLES ON THIS LEVEL CIRCUITED TO PNL-LBA1 UNLESS OTHERWISE NOTED.

SHEET NOTES (X)

1. PROVIDE POWER FOR TRASH COMPACTOR. CONFIRM ELECTRICAL REQUIREMENTS WITH MANUFACTURER PRIOR TO ROUGH-IN.
2. PROVIDE POWER FOR TRASH CHUTE. INTERCONNECTS AND CONTROLS PROVIDED BY VENDOR.
3. PROVIDE POWER FOR SECTIONAL OVERHEAD DOOR FURNISHED AND INSTALLED BY OTHERS. CONFIRM ELECTRICAL REQUIREMENTS WITH MANUFACTURER PRIOR TO ROUGH-IN.
4. PROVIDE POWER FOR IRRIGATION CONTROLLER. CONFIRM LOCATION WITH LANDSCAPE ARCHITECT PRIOR TO ROUGH-IN.
5. PROVIDE OVERRIDE SWITCH FOR SITE LIGHTING.
6. PROVIDE 120V, LED ENCLOSED LINEAR STRIP LIGHT. CONNECT PIT LIGHTING TO LINE SIDE OF GFCI RECEPTACLE.
7. MOUNT PIT LIGHT SWITCH ADJACENT TO LADDER AND USE ILLUMINATED HANDLE TYPE.
8. UTILITY CABINETS BY SERVICE PROVIDER.
9. PROVIDE CODE REQUIRED "STUMBLE" LIGHTING THROUGHOUT RETAIL SPACE.
10. PROVIDE GREENGATE 0-10V DIMMER WALL STATION WBSD.
11. PROVIDE OVERRIDE SWITCH FOR LOBBY LIGHTING.
12. PROVIDE POWER SUPPLY FOR 24V LUMINAIRES. CIRCUIT NO MORE THAN 86W TO EACH POWER SUPPLY.

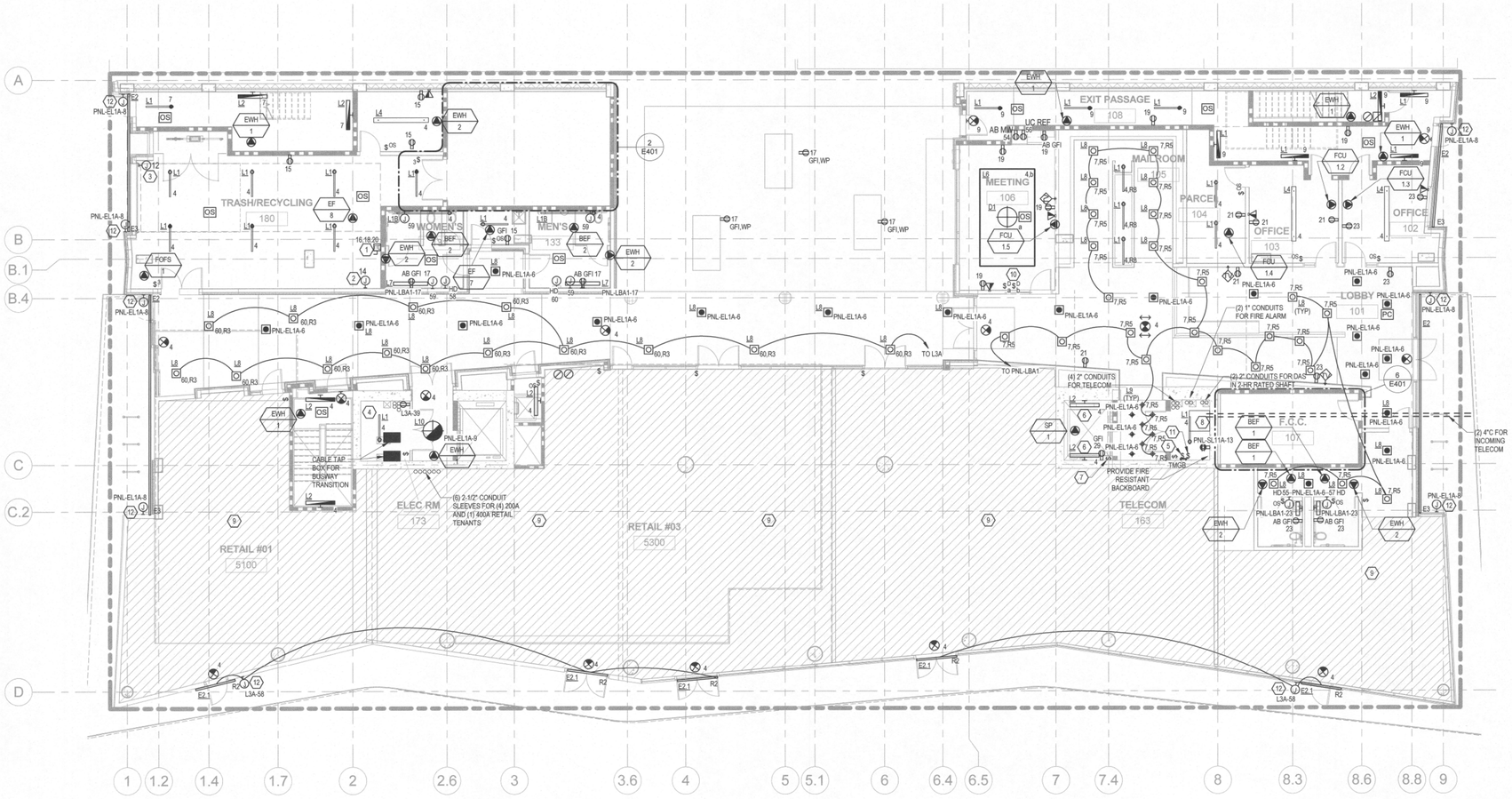

1 LEVEL 1 ELECTRICAL FLOOR PLAN
1/8" = 1'-0"

LRS ARCHITECTS
720 NW Davis 503.221.1121
Suite 300 503.221.2077
Portland OR 97209 www.lrsarchitects.com

REGISTERED PROFESSIONAL ENGINEER #74350 OREGON JUNE 2, 2010 JENNIFER K. STREB

EXP. DATE: 6/30/2018

LEVERARCHITECTURE

4713 N ALBINA AVE, PDX OR 97217
T 503 928 6040
www.leverarchitecture.com

CONSULTANT:

SAMATA CONSULTING ENGINEERS LLC

PROJECT NUMBER: 215349

GRAND AVENUE APARTMENTS

1010 NE GRAND AVE. PORTLAND, OR 97232

SHEET TITLE:

LEVEL 1 ELECTRICAL FLOOR PLAN

DRAWN BY: *Author*
DATE CREATED: *03/16/17*

SHEET:

E301

PERMIT SET 07-14-2017

LRS Architects, Inc. ©2017

BIM 360://NE Grand_Samata/Grand Ave Apts_Elec_V17.rvt
7/12/2017 8:27:04 PM

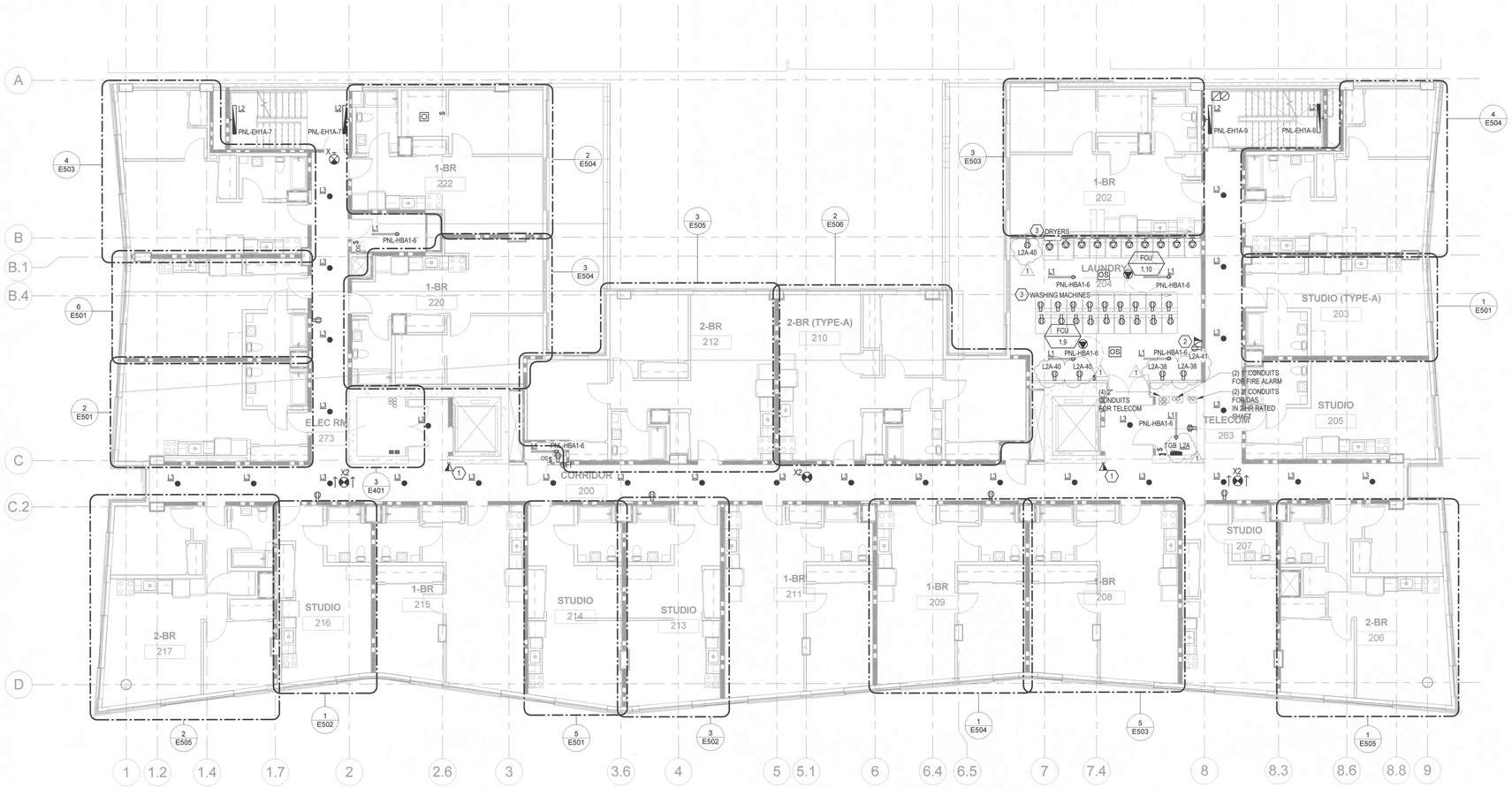

1 LEVEL 2-6, 8-10 ELECTRICAL FLOOR PLAN
1/8" = 1'-0"

GENERAL NOTES

A. PROVIDE NO MORE THAN 10 FSD'S PER CIRCUIT. REFERENCE MECHANICAL DRAWINGS FOR LOCATIONS. CIRCUIT FSD'S AS FOLLOWS:
   a. LEVEL 2: PNL-LBA1-26
   b. LEVEL 3: PNL-LBA1-28
   c. LEVEL 4: PNL-LBA1-30
   d. LEVEL 5: PNL-LBA1-32
   e. LEVEL 6: PNL-LBA1-34
   f. LEVEL 8: PNL-L11A-1
   g. LEVEL 9: PNL-L11A-3
   h. LEVEL 10: PNL-L11A-5

B. CIRCUIT CORRIDOR AND JANITOR ROOM RECEPTACLES AS FOLLOWS:
   a. LEVEL 2: PNL-LBA1-31
   b. LEVEL 3: PNL-LBA1-33
   c. LEVEL 4: PNL-LBA1-35
   d. LEVEL 5: PNL-LBA1-37
   e. LEVEL 6: PNL-LBA1-39
   f. LEVEL 8: PNL-L11A-10
   g. LEVEL 9: PNL-L11A-12
   h. LEVEL 10: PNL-L11A-14

C. THIS DRAWING IS INTENDED TO SHOW OVERALL COMMON AREA SCOPE OF WORK. REFER TO ENLARGED PLANS FOR TYPICAL UNIT SCOPE OF WORK.

D. CIRCUIT LIGHTING AND EXIT SIGNS AS FOLLOWS UON:
   a. LEVEL 2: PNL-EH1A-6
   b. LEVEL 3: PNL-EH1A-6
   c. LEVEL 4: PNL-EH1A-6
   d. LEVEL 5: PNL-EH1A-6
   e. LEVEL 6: PNL-EH11A-1
   f. LEVEL 8: PNL-EH11A-1
   g. LEVEL 9: PNL-EH11A-1
   h. LEVEL 10: PNL-EH11A-2

E. COORDINATE TAMPER AND FLOW SWITCH LOCATIONS WITH FIRE PROTECTION CONTRACTOR PRIOR TO ROUGH-IN.

F. DIM STAIRWELL LUMINAIRES TO 10% BRIGHTNESS WHEN OCCUPANCY IS NOT DETECTED. TYPE L2 FIXTURES CONTROLLED VIA INTEGRAL OCCUPANCY SENSOR.

G. CIRCUIT ELECTRICAL CLOSET RECEPTACLES TO L3A-39 ON LEVELS 2 THROUGH 6 AND TO L3A-41 ON LEVELS 8 THROUGH 10.

H. PROVIDE DEDICATED RECEPTACLE IN TELECOM ROOMS ON LEVELS 3, 5, AND 9 WITH CIRCUITING AS FOLLOWS:
   a. LEVEL 3: PNL-L3A-13
   b. LEVEL 5: PNL-L3A-15
   c. LEVEL 9: PNL-L11A-32

SHEET NOTES (X)

1. PROVIDE 2-WAY COMMUNICATION DEVICE. COORDINATE EXACT LOCATION WITH ARCHITECT PRIOR TO ROUGH-IN.
2. PROVIDE POWER AND DATA FOR ATM. CONFIRM POWER REQUIREMENTS WITH VENDOR PRIOR TO INSTALLATION.
3. LAUNDRY EQUIPMENT ON LEVEL 2 CIRCUITED TO PNL-L2A LOCATED IN LEVEL 2 TELECOM ROOM.

LRS ARCHITECTS
720 NW Davis 503.221.1121
Suite 300 503.221.2077
Portland OR 97209 www.lrsarchitects.com

EXPIRES: 6/30/18
REGISTERED PROFESSIONAL ENGINEER
74350
OREGON
JUNE 2, 2010
JENNIFER K. STREB

LEVERARCHITECTURE
4713 N ALBINA AVE, PDX OR 97217
T 503 928 6040
www.leverarchitecture.com

CONSULTANT:

SAMATA
CONSULTING ENGINEERS LLC

PROJECT NUMBER: *215349*

GRAND AVENUE APARTMENTS

1010 NE GRAND AVE. PORTLAND, OR 97232

SHEET TITLE:

LEVEL 2-6, 8-10 ELECTRICAL FLOOR PLAN

DRAWN BY: *Author*
DATE CREATED: *03/16/17*

1	Addendum 1	8/11/17

RECEIVED
SEP 06 2017
BDS
DOCUMENT SERVICES

SHEET:

E302

PERMIT SET
07-14-2017

LRS Architects, Inc. ©2017

GENERAL NOTES

A. CIRCUIT ALL FSD'S ON THIS LEVEL TO PNL-LBA1. PROVIDE NO MORE THAN 10 FSD'S PER CIRCUIT. REFERENCE MECHANICAL DRAWINGS FOR LOCATIONS.

B. THIS DRAWING IS INTENDED TO SHOW OVERALL COMMON AREA SCOPE OF WORK. REFER TO ENLARGED PLANS FOR TYPICAL UNIT SCOPE OF WORK.

C. ALL LIGHTING ON THIS FLOOR CIRCUITED TO PNL-EH11A UON.

D. COORDINATE TAMPER AND FLOW SWITCH LOCATIONS WITH FIRE PROTECTION CONTRACTOR PRIOR TO ROUGH-IN.

E. DIM STAIRWELL LUMINAIRES TO 10% BRIGHTNESS WHEN OCCUPANCY IS NOT DETECTED. TYPE L2 FIXTURES CONTROLLED VIA INTEGRAL OCCUPANCY SENSOR.

SHEET NOTES (X)

1. PROVIDE 2-WAY COMMUNICATION DEVICE. COORDINATE EXACT LOCATION WITH ARCHITECT PRIOR TO ROUGH-IN.



1 LEVEL 7 ELECTRICAL FLOOR PLAN
1/8" = 1'-0"

BIM 360://NE Grand_Samata/Grand Ave Apts_Elec_V17.rvt
8/10/2017 4:38:58 PM

LRS ARCHITECTS
720 NW Davis 503.221.1121
Suite 300 503.221.2077
Portland OR 97209 www.lrsarchitects.com

EXPIRES: 6/30/18

REGISTERED PROFESSIONAL ENGINEER 74350 OREGON JUNE 2, 2010 JENNIFER K. STREB

LEVERARCHITECTURE

4713 N ALBINA AVE, PDX OR 97217
T 503 928 6040
www.leverarchitecture.com

CONSULTANT:

SAMATA CONSULTING ENGINEERS LLC

PROJECT NUMBER: *215349*

GRAND AVENUE APARTMENTS

1010 NE GRAND AVE. PORTLAND, OR 97232

SHEET TITLE:

LEVEL 7 ELECTRICAL FLOOR PLAN

DRAWN BY: *Author*
DATE CREATED: *03/16/17*

1	Addendum 1	8/11/17

RECEIVED SEP 06 2017 BDS DOCUMENT SERVICES

SHEET:

E307

PERMIT SET 07-14-2017

LRS Architects, Inc. ©2017

GENERAL NOTES

A. CIRCUIT ALL F3D'S ON THIS LEVEL TO PNL-L11A. PROVIDE NO MORE THAN 10 F3D'S PER CIRCUIT. REFERENCE MECHANICAL DRAWINGS FOR LOCATIONS.

B. THIS DRAWING IS INTENDED TO SHOW OVERALL COMMON AREA SCOPE OF WORK. REFER TO ENLARGED PLANS FOR TYPICAL UNIT SCOPE OF WORK.

C. ALL LIGHTING ON THIS FLOOR CIRCUITED TO PNL-EH11A UON.

D. COORDINATE TAMPER AND FLOW SWITCH LOCATIONS WITH FIRE PROTECTION CONTRACTOR PRIOR TO ROUGH-IN.

E. DIM STAIRWELL LUMINAIRES TO 10% BRIGHTNESS WHEN OCCUPANCY IS NOT DETECTED. TYPE L2 FIXTURES CONTROLLED VIA INTEGRAL OCCUPANCY SENSOR.

SHEET NOTES (X)

1. PROVIDE 2-WAY COMMUNICATION DEVICE. COORDINATE EXACT LOCATION WITH ARCHITECT PRIOR TO ROUGH-IN.



1 LEVEL 11 ELECTRICAL FLOOR PLAN
1/8" = 1'-0"

LRS ARCHITECTS
720 NW Davis 503.221.1121
Suite 300 503.221.2077
Portland OR 97209 www.lrsarchitects.com

REGISTERED PROFESSIONAL ENGINEER #74350 OREGON JUNE 2, 2010 JENNIFER K. STREB

EXP. DATE: 6/30/2018

LEVERARCHITECTURE
4713 N ALBINA AVE, PDX OR 97217
T 503 928 6040
www.leverarchitecture.com

CONSULTANT:

SAMATA CONSULTING ENGINEERS LLC

PROJECT NUMBER: *215349*

GRAND AVENUE APARTMENTS

1010 NE GRAND AVE. PORTLAND, OR 97232

SHEET TITLE:

LEVEL 11 ELECTRICAL FLOOR PLAN

DRAWN BY: *Author*
DATE CREATED: *03/16/17*

SHEET:

E311

PERMIT SET 07-14-2017

LRS Architects, Inc. ©2017

BIM 360://NE Grand_Samata/Grand Ave Apts_Elec_V17.rvt
7/12/2017 8:27:07 PM

GENERAL NOTES

A. CIRCUIT ALL FSD'S ON THIS LEVEL TO L11A. PROVIDE NO MORE THAN 10 FSD'S PER CIRCUIT. REFERENCE MECHANICAL DRAWINGS FOR LOCATIONS.

B. THIS DRAWING IS INTENDED TO SHOW OVERALL COMMON AREA SCOPE OF WORK. REFER TO ENLARGED PLANS FOR TYPICAL UNIT SCOPE OF WORK.

C. ALL LIGHTING ON THIS FLOOR CIRCUITED TO PNL-EH11A UON.

D. COORDINATE TAMPER AND FLOW SWITCH LOCATIONS WITH FIRE PROTECTION CONTRACTOR PRIOR TO ROUGH-IN.

E. DIM STAIRWELL LUMINAIRES TO 10% BRIGHTNESS WHEN OCCUPANCY IS NOT DETECTED. TYPE L2 FIXTURES CONTROLLED VIA INTEGRAL OCCUPANCY SENSOR.

F. REFER TO E002 FOR LIGHTING CONTROL SCHEDULE.

SHEET NOTES (X)

1. PROVIDE 2-WAY COMMUNICATION DEVICE. COORDINATE EXACT LOCATION WITH ARCHITECT PRIOR TO ROUGH-IN.
2. PROVIDE CONNECTION TO FIRE ALARM SYSTEM FOR TRASH CHUTE.
3. PROVIDE GREENGATE 0-10V DIMMER WALL STATION WBSD.



1 LEVEL 12 ELECTRICAL FLOOR PLAN
1/8" = 1'-0"

LRS ARCHITECTS
720 NW Davis 503.221.1121
Suite 300 503.221.2077
Portland OR 97209 www.lrsarchitects.com

REGISTERED PROFESSIONAL ENGINEER #74350 OREGON JUNE 2, 2010 JENNIFER K. STREB
EXP. DATE: 6/30/2018

LEVERARCHITECTURE
4713 N ALBINA AVE, PDX OR 97217
T 503 928 6040
www.leverarchitecture.com

CONSULTANT:

SAMATA CONSULTING ENGINEERS LLC

PROJECT NUMBER: 215349

GRAND AVENUE APARTMENTS

1010 NE GRAND AVE. PORTLAND, OR 97232

SHEET TITLE:
LEVEL 12 ELECTRICAL FLOOR PLAN

DRAWN BY: *Author*
DATE CREATED: *03/16/17*

SHEET:
E312
PERMIT SET
07-14-2017

LRS Architects, Inc. ©2017

GENERAL NOTES

A. REFER TO MECHANICAL DRAWINGS FOR EQUIPMENT AND MOUNTING DETAILS.

B. RUN ALL HORIZONTAL CONDUIT BELOW ROOF.

C. ALL EXTERIOR MOUNTED EQUIPMENT AND CONDUIT SHALL BE WEATHERPROOF RATED, MINIMUM NEMA 3R.

D. THESE DRAWINGS ARE DIAGRAMMATIC. INSTALL ALL EQUIPMENT PER MANUFACTURER'S RECOMMENDATIONS AND INSTRUCTIONS.

E. CIRCUIT SIZES ARE INDICATED ON MECHANICAL EQUIPMENT SCHEDULE AND RESPECTIVE SCHEDULES.

F. ROUTE ALL CONDUITS UP THROUGH EQUIPMENT CURBS. COORDINATE LOCATION TO AVOID CONFLICTS AND ALLOW FOR CODE CLEARANCES AND MAINTENANCE ACCESS.

G. DIM STAIRWELL LUMINAIRES TO 10% BRIGHTNESS WHEN OCCUPANCY IS NOT DETECTED. TYPE L2 FIXTURES CONTROLLED VIA INTEGRAL OCCUPANCY SENSOR.

H. REFER TO E002 FOR LIGHTING CONTROL SCHEDULE.

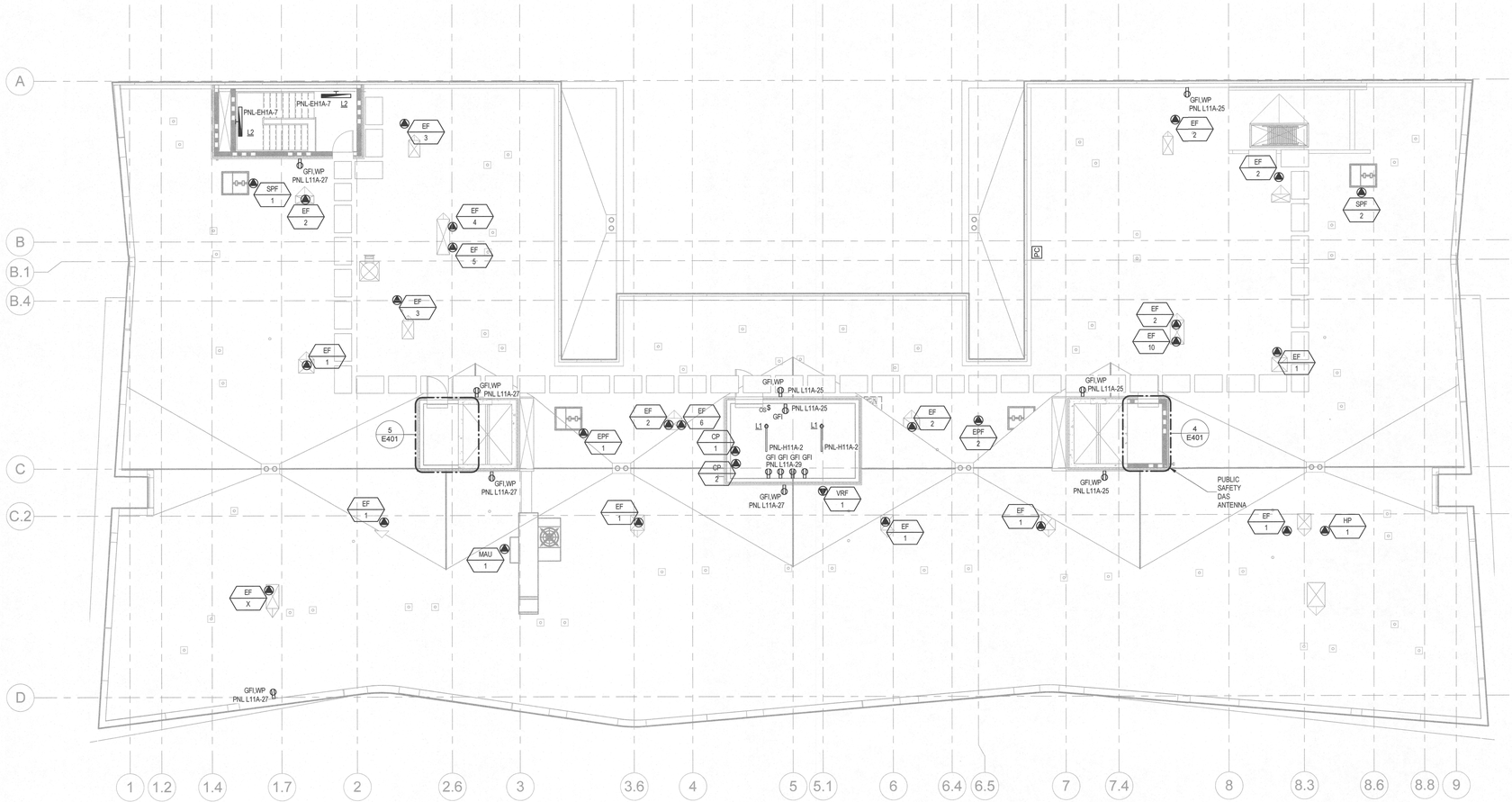

1 ROOF ELECTRICAL FLOOR PLAN
1/8" = 1'-0"

LRS ARCHITECTS
720 NW Davis 503.221.1121
Suite 300 503.221.2077
Portland OR 97209 www.lrsarchitects.com

REGISTERED PROFESSIONAL ENGINEER #74350 OREGON JUNE 2, 2010 JENNIFER K. STREB

EXP. DATE: 6/30/2018

LEVERARCHITECTURE
4713 N ALBINA AVE, PDX OR 97217
T 503 928 6040
www.leverarchitecture.com

CONSULTANT:

SAMATA
CONSULTING ENGINEERS LLC

PROJECT NUMBER: *215349*

GRAND AVENUE APARTMENTS

1010 NE GRAND AVE. PORTLAND, OR 97232

SHEET TITLE:
ROOF ELECTRICAL PLAN

DRAWN BY: *Author*
DATE CREATED: *03/16/17*

SHEET:
E313
PERMIT SET
07-14-2017

LRS Architects, Inc. ©2017