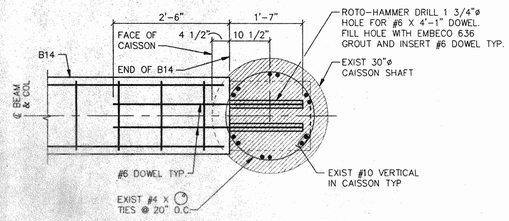

1 PLAN SECTION – TYPICAL
3/4" = 1'-0"
4559060

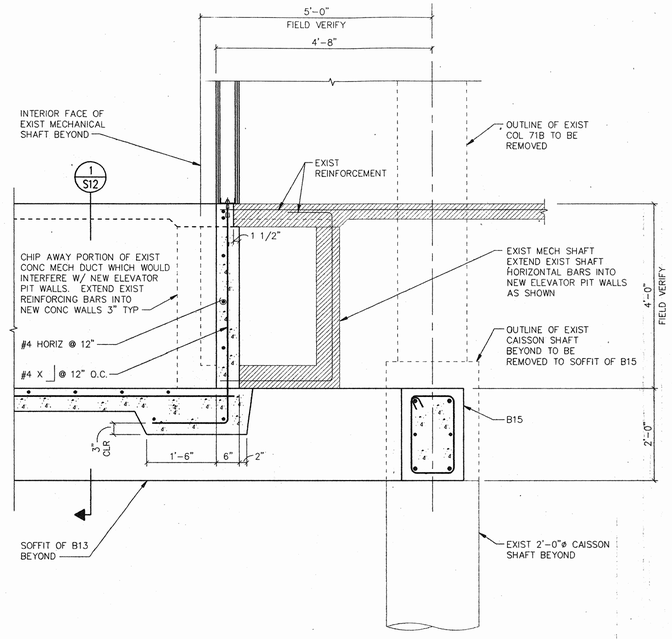

2 SECTION
3/4" = 1'-0"
4559061

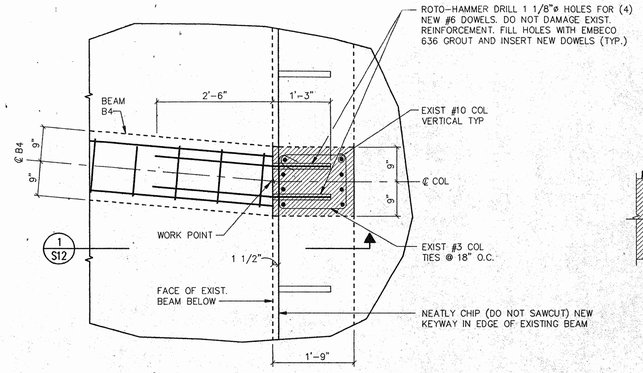

3 PLAN DETAIL – TYPICAL
3/4" = 1'-0"
4559058

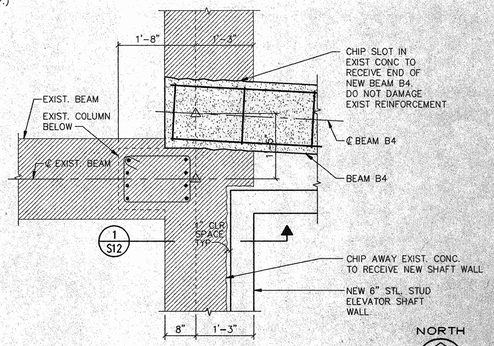

4 PLAN SECTION – TYPICAL
3/4" = 1'-0"
4559059

NORTH

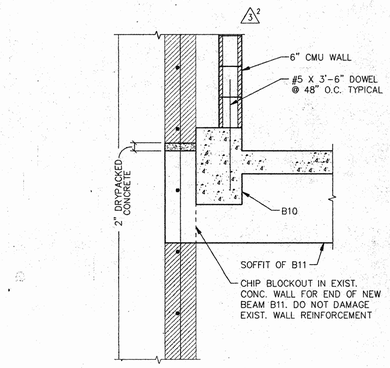

5 SECTION
3/4" = 1'-0"
4559068

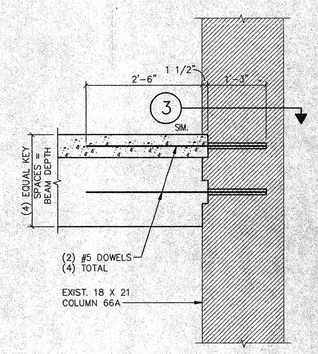

6 SECTION
3/4" = 1'-0"
4559069

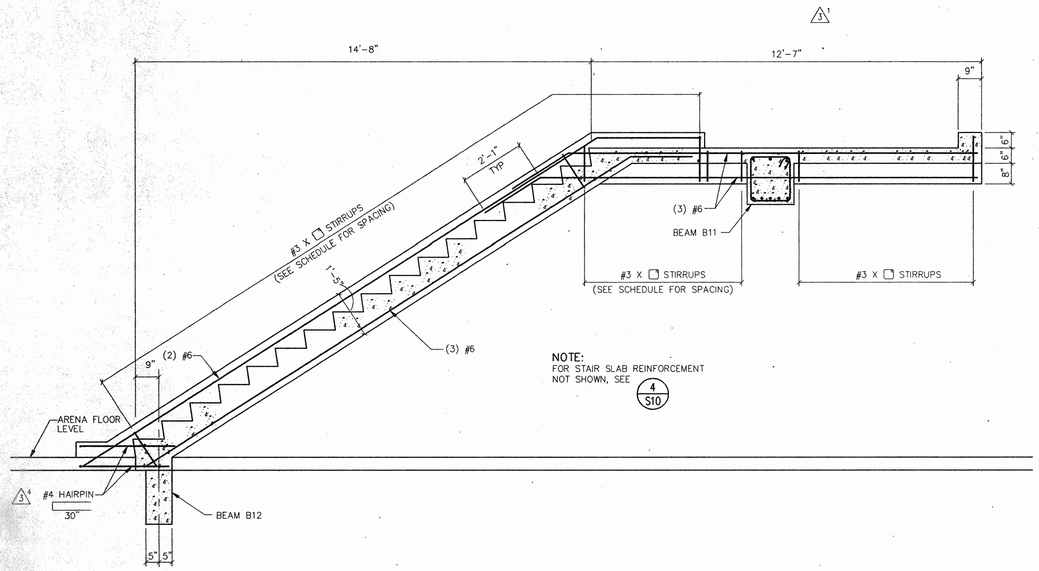

7 ELEVATION BEAM B9 (B10 IS SIMILAR)
1/2" = 1'-0"
4559066

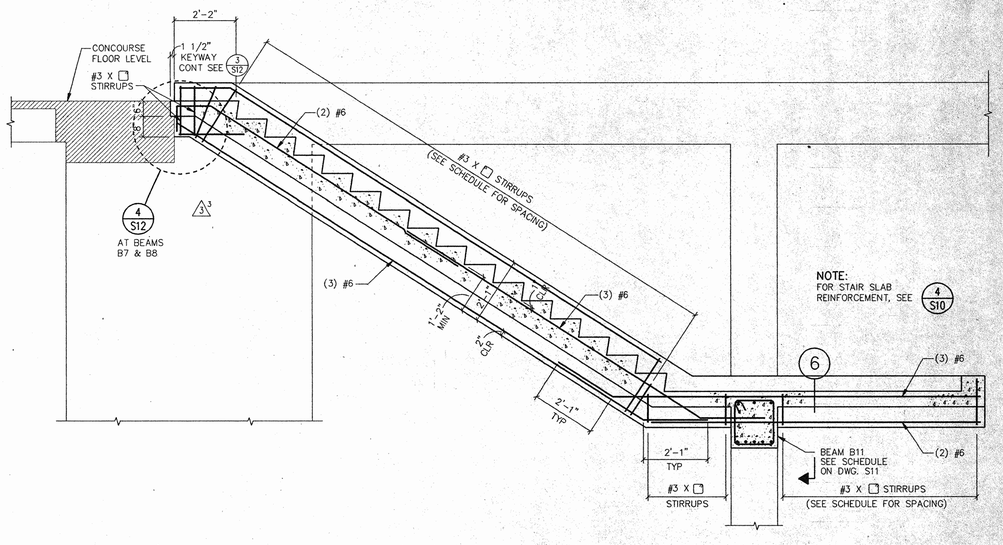

8 ELEVATION BEAMS B7 AND B8
1/2" = 1'-0"
4559067

RECORD DRAWING AS REPORTED

Documents have been revised based solely on Record Working Drawings supplied by the Contractor and the Contract Documents. They do not necessarily show all existing conditions and may not be accurate at all locations. Field verify existing and/or hidden conditions prior to commencement of new work.
DECEMBER 28, 1993

NO.	DATE	REVISIONS	NO.	DATE	REVISIONS
1	6/9/93	ISSUED FOR BUILDING PERMIT			
2	6/15/93	ISSUED FOR PROPOSALS			
3	9/8/93	SUPPLEMENT NO. 3			
4	12/28/93	RECORD SET			

MOFFATT NICHOL & BONNEY, INC.
Consulting Engineers/Planners
1845 Northeast Couch Street, Portland Oregon 97232
Telephone (503) 232-2117, Fax (503) 232-8023

PDC PORTLAND DEVELOPMENT COMMISSION

REGISTERED PROFESSIONAL ENGINEER 5945 OREGON JULY 14, 1967 JAMES R. McGREW

DESIGNED: DRL
DRAWN: DPR
CHECKED: RMB
ISSUED: 6/9/93
SCALE: AS SHOWN

SECTIONS AND DETAILS

MEMORIAL COLISEUM 1993 IMPROVEMENTS

PORTLAND, OREGON

PROJECT NO. P4559D

DRAWING NO. S13

K:\JOB\P4559D\V559S13 09:50 02/03/1994 EHG