Moore-Love, Karla

From: Hull Caballero, Mary
Sent: Wednesday, December 02, 2015 7:58 AM
To: Council Clerk – Testimony
Subject: FW: Comment to Proposed Accessory Structure Zoning Code Update

---

From: Jenny Seilo [mailto:jpritchard98@yahoo.com]
Sent: Tuesday, December 01, 2015 10:41 PM
To: Hull Caballero, Mary <Mary.HullCaballero@portlandoregon.gov>
Subject: Fw: Comment to Proposed Accessory Structure Zoning Code Update

Mary,

As it relates to Council Agenda Item 1229 at tomorrow's City Council meeting related to Accessory Structures Zoning Code Update Project, I urge you **to vote to approve Commissioner Fritz's Amendment proposed on 11/18 which would not allow Accessory Dwelling Units to be placed within the side and rear setbacks in the R7, R5 and R2.5 zones.** Without this amendment, ADUs, many of which are being built to be rented out via air bnb (mini neighborhood hotels) could be built with zero side and rear setbacks in residential neighborhoods, negatively impacting adjacent neighbors.

Below is the email I sent earlier to the Commissioners and Mayor regarding this topic.

Thank you for your consideration.

Jenny Seilo

----- Forwarded Message -----
From: Jenny Seilo <jpritchard98@yahoo.com>
To: "mayorhales@portlandoregon.gov" <mayorhales@portlandoregon.gov>; "nick@portlandoregon.gov" <nick@portlandoregon.gov>; Commissioner Fritz <amanda@portlandoregon.gov>; "dan@portlandoregon.gov" <dan@portlandoregon.gov>; Steve Novick <steve.novick@portlandoregon.gov>; "cctestimony@portlandoregon.gov" <cctestimony@portlandoregon.gov>
Cc: "andre.baugh@portlandoregon.gov" <andre.baugh@portlandoregon.gov>; Matt Grumm <matt.grumm@portlandoregon.gov>; "laura.hanson@portlandoregon.gov" <laura.hanson@portlandoregon.gov>; "Jillian.Detweiler@portlandoregon.gov" <Jillian.Detweiler@portlandoregon.gov>; Robert McCullough <robert@mresearch.com>; Rod Merrick <merrick_map@yahoo.com>; "clark@pbsenv.com" <clark@pbsenv.com>
Sent: Sunday, November 29, 2015 8:56 PM
Subject: Comment to Proposed Accessory Structure Zoning Code Update

Commissioners and Mayor,

My name is Jenny Seilo, a resident of the Eastmoreland neighborhood and I sent an email to this group on 10/5/15 voicing my concerns regarding potential safety concerns arising from allowing ADUs to be used as Air BnB rentals in residential neighborhoods. The email is attached below for your reference.

I am now writing to voice my concerns regarding the proposed amendments to the City of Portland's Building Code as it relates to ADUs to be voted on this Wednesday 12/2. I understand the proponents of ADUs (presumably Portland residents that have built or are planning to build one) have been vocal in their support of the proposed revised building code, however I am writing you as Portland resident who has recently been negatively impacted by an ADU built in my neighbor's backyard (and what feels like mine) with the intent to rent it out via Air BnB. Therefore, I ask you to consider the revised building code not only from the perspective of those that will benefit and profit from building ADUs, but also from those that may be negatively impacted and consider revising the proposed ADU Zoning Code as follows:

1) Permitting Process – Currently and as proposed, obtaining a permit to build an ADU is a separate and discreet process from obtaining a permit to use the structure as a short term rental. Permit for intended use (if required) comes after the ADU has been built. No notice is required to abutting neighbors including if ADU is to be built for the intended use as a short term rental (e.g. Air BnB) until after the ADU has been built and is ready to be put in operation.
** Recommended Revision – Disclosure of the intended use of a proposed ADU should be required as part of the building permit process and if an ADU is being built for income producing short term rental purposes (e.g. Air BnB), adjacent neighbors as well as the neighbourhood association should be given a comment period to voice their support or concern for the proposed development which should be taken into consideration. This would make the permitting process more in line with that for a proposed commercial development, which in essence an ADU for short term rental purpose is (income producing asset for the benefit of the owner of the property).

2) Setback - Current code requires min. 5' setback from the abutting property with Council considering an amendment to allow smaller dwelling structures (10' high walls, 24' long max) to be built with zero set back from property line.
**** Recommended Revision - Maintain the minimum 5' setback as not allowing for any setback encroaches upon the abutting properties (both visually and acoustically) and does not allow for sufficient space for the impacted neighbor(s) to be able to screen out the new structure. A zero setback is particularly problematic in Portland neighborhoods with small lots where the new ADU may end up being built just as close or closer to some of the abutting property homes as it is to the primary lot home.**

3) Height - Council is considering an amendment to increase max height of ADUs from 18' to 20' irrespective of the height of the primary lot home.
** Recommended Revision - Max height of ADU should be the lesser of 20' or height of primary lot home in order to maintain character of primary home, neighborhood and minimize impact on abutting neighbors.

4) Exterior Finish Materials – Code currently written and proposed so that finish materials on the detached covered accessory structure must "be the same or visually match in type, size and placement, the exterior finish material of the primary structure".
**Recommended Revision – Be more specific in defining "placement" so that visually the ADU must look the same as the primary structure when viewing the ADU and primary structure from the same direction. It is critical that as we increase our already dense neighborhoods, we do not take away from the aesthetic appeal of the neighborhood. In the example of the ADU being built in my neighbor's backyard, the primary structure is entirely cedar lap siding other than < 5% of the home being vertical beadboard (around the front door only) and concrete (on the bottom third of the front of the house). However the exterior of the ADU is less than 50% cedar lap siding with the rest being vertical beadboard and smooth concrete (e.g. stucco), making it so aesthetically the new ADU does not blend in with the character of the primary home or the neighborhood in general.

Lastly, given the significant increase in the number of ADUs that have been built in Portland since the City decided to waive SDC fees, the City should actively solicit feedback from neighbors adjacent to properties where ADUs have been built as well as the neighborhood associations to find out what is working and what is not from the perspective of the impacted neighbor.

Thank you for your consideration.

Sincerely,
Jenny Seilo

From: Jenny Seilo <jpritchard98@yahoo.com>
To: "mayorhales@portlandoregon.gov" <mayorhales@portlandoregon.gov>; "nick@portlandoregon.gov" <nick@portlandoregon.gov>; Commissioner Fritz <amanda@portlandoregon.gov>; "dan@portlandoregon.gov" <dan@portlandoregon.gov>; "commissioner-novick@portlandoregon.gov" <commissioner-novick@portlandoregon.gov>
Sent: Monday, October 5, 2015 9:34 PM
Subject: Air BnB Hotel Being Built in Neighbor's Backyard

187471

Mayor Hales and Commissioners Saltzman, Fritz, Fish, Novick,

My name is Jenny Seilo and I live in the Eastmoreland neighborhood. I am writing you regarding the neighbor abutting the north side of my property at 3622 SE Lambert Street who is building a 800 sf ADU in their backyard and also finishing off their basement in order to rent both out via Air BnB.

I have various issues related to the building of the ADU (e.g., lack of notification to neighbors – we found out when the lumber was being delivered last week; building permit issued irrespective of long-term intended use of structure; minimal 5 feet setback from back lot line regardless of lot sizes of abutting properties; etc.), but I am explicitly reaching out to you concerning the safety of my three children, ages 1, 4 and 7, who spend a significant portion of their day playing in our backyard, directly adjacent to where the new neighborhood "hotel" is located. Further, there are 12 children, 12-years or under directly surrounding the property where the hotel is being built.

Adding a hotel five feet from my property's backyard makes it so that I no longer feel safe letting my children play in our yard without being outside with them. Although I realize you run the risk when renting or buying any home that you don't know who your neighbors will be and if there will be safety concerns, but having a hotel in your backyard, in a residentially zoned area where conceivably there could be up to 365 different people staying there throughout the year, makes it obvious there is not any thoroughly vetted land use policy in place for ADUs, specifically being built for Air BnB purposes.

I am very disappointed that what I believe was a well intentioned policy to allow Air BnB rentals in Portland homes and ADUs in order for the City of Portland to capture some additional lodging tax revenue will have unintended consequences. However, I refuse to let that consequence be a safety issue that directly affects my family and neighborhood.

Therefore, I ask of you two things:
1) As my City of Portland elected Mayor and Commissioners, what can be done to alleviate my safety concerns from a policy standpoint?
2) Put yourself in my shoes and advise what you would do as a parent if you lived where I live to ensure that your family remained safe?

I appreciate your consideration and forthcoming response.

Jenny Seilo
Resident, City of Portland

187471

Moore-Love, Karla

From: David Posada <posada@pdx.edu>
Sent: Wednesday, December 02, 2015 4:31 AM
To: Council Clerk – Testimony; Commissioner Fritz; Finn, Brendan; Commissioner Fish; Grumm, Matt; Commissioner Novick; Hales, Mayor
Subject: Accessory Dwellings Code Amendment comment for Dec 2nd meeting

Honorable Council members,

I wish to state my opposition to the changes proposed by Commissioner Fritz to exclude smaller ADUs from being built within the 5' setback. The changes she has proposed reverses much of the extensive work the task force and public have done to promote smaller scale affordable housing that fits appropriately into Portland's residential fabric.

I understand and respect Commissioner's Fritz's and other's concern for privacy and quality of life when building new structures within the setback.

But allowing smaller ADU's to be built closer to the property lines does not in the end create the looming threat to privacy some critics assume.

Small outbuildings and garages built on the property line are a common occurrence in our city and part of our traditional building stock.

Many existing garages within setbacks have NOT been converted to ADU's as current code limits them to 200 sf, which is unsuitably small for most users. We need to allow these to be converted to reasonably small ADUs.

A smaller ADU built against a property line provides greater open space on the property being developed and encourages smaller accessory houses with stronger connections to their own site and open space.

That same ADU with its blank wall less than 24' long and 10' high on the property line provides a greater sense of privacy *for it's neighbor* than if it had been a larger ADU with windows and space for people to move set 5' back from the property line.

"Good fences make good neighbors." A smaller ADU on the property line makes a good fence.

Commissioner Fritz's commented that home-owners would still be allowed to file a Land Use Appeal if they wanted to build an ADU in the setback. This ignores the barrier a Type 3 Land Review process creates for homeowners already struggling to make a budget and schedule for building an ADU feasible. The ADU projects that have gone through the onerous adjustment/ appeals process show that ADU's on the property line do not threaten the neighbor's quality of life.

She said "smaller ADU's can still be built, just not within the setback." This removes a substantial incentive - making better use of the developed property's open space - by over-stating the impact on neighboring properties.

If the commission still objects to new, smaller ADU's being built within the setback I propose the amendment be modified so that:

1. EXISTING structures such as detached garages within the setbacks be allowed to be rebuilt and/ or expanded as ADU's if they meet the size limits (24' length, 10' height) that were proposed;
AND
2. New ADUs that meet the proposed size limits may have their setbacks reduced to 2 feet if a blank wall and a landscaping buffer is provided adjacent to the property line.

Otherwise, much of the thoughtful effort by many people to promote appropriately scaled, in-fill affordable housing will be lost.

Let's not throw out the baby with the bath water.

Respectfully submitted,

--
David Posada
Adjunct Professor
Portland State University School of Architecture
Registered Architect, LEED AP, CPHC
971-322-8936
posada@pdx.edu

187471

Moore-Love, Karla

From: Ray Culi <ray@rnbdesign.org>
Sent: Tuesday, December 01, 2015 6:43 PM
To: Council Clerk – Testimony; Hales, Mayor; Commissioner Fish; Novick, Steve; Commissioner Saltzman
Subject: Comment on Commissioner Fritz's amendment to Accessory Structures Zoning Code Updates

Dear City Council,

I disagree with Commissioner Fritz's amendment to the Accessory Structures Zoning Code Updates. Commissioner Fritz specifically pointed out the Zoning Code's intent of having setbacks for the purposes of access to air and light, and I fully agree with this code intent, especially with respect to living spaces. It may have, however, been overlooked that the proposed code change by Bureau of Planning and Sustainability (BPS) would still allow access to air and light because openings would still be allowed as long as upper walls are stepped back and away from the property line. This is really no different than what the code currently allows.

I believe BPS's proposed change to allow ADUs to be built in the setback will not only encourage more citizens to convert existing garages into much needed urban infill housing, but encourage them to do so with designs that provide light and air through clerestory and upper level openings that are set back from the property line.

I, therefore, respectfully oppose Commissioner Fritz's amendment and support BPS's proposed change to allow ADUs, as with other accessory structures, in the setback.

Respectfully,

Ray Culi, Co-Owner
R&B Design Studio LLC
70 NE Fremont St, Portland, OR 97212
phone: 971-570-5175
Design in rhythm & harmony with nature. www.rnbdesign.org

187471

Moore-Love, Karla

From: moontrout@gmail.com on behalf of nature boy <moontrout@cityrepair.org>
Sent: Tuesday, December 01, 2015 5:28 PM
To: Mark Lakeman
Cc: Council Clerk – Testimony; Commissioner Fritz; Hales, Mayor; Commissioner Fish; Novick, Steve; Commissioner Saltzman
Subject: Unfortunate ADU Amendment

Dear Mayor Hales and Esteemed Commissioners,

On behalf of the City Repair Project, I'm writing to state our **opposition** to the recent amendment to the "Accessory Structure Zoning Code Update" that would prohibit building new, modestly scaled ADU's within the side or rear yard setback. Instead, we feel that the Accessory Structure Zoning Code Update, as previously written, will work very well to support modest infill projects while taking better advantage of mostly under-utilized square footage in the setback.

We've never disagreed with Commissioner Fritz on policy before, and don't like to now. However, the proposed amendment will likely lose positive aspects on the related issues than it gains. On the other hand, allowing people to build within the setback while also limiting buildable area, is a smart and highly sustainable way to build habitable spaces. Just because the living area will be modest in scale doesn't mean that it will only be used for short term rentals. On the other hand, we do hope that we as a city can find an effective way to limit short term rentals, but we don't feel that the late proposed amendments will help on this issue.

We very much like the idea of using setback area for building, which can also result in more available open space in the center of a site, for other uses such as gardens or gathering places.

In summary, we feel the proposed changes to the zoning code, without the amendment, are already well digested. They clarify and simplify the code. Please vote no on the proposed amendment.

Thanks very much,

Mark Lakeman
For the Board of Directors, City Repair

Mark Lakeman, Co-Founder

The City Repair Project
Portland, Oregon | www.cityrepair.org
c: 503.381.5885 | moontrout@cityrepair.org

87471

Moore-Love, Karla

From: Taz Loomans <taz@communitecture.net>
Sent: Tuesday, December 01, 2015 5:00 PM
To: Hales, Mayor; Commissioner Fish; Commissioner Fritz; Novick, Steve; Commissioner Saltzman; Council Clerk – Testimony
Subject: Pass the ADU Zoning Code Update WITHOUT the amendment

Dear Mayor and Commissioners,

I would like to voice my opposition with Commissioner Amanda Fritz's amendment to the Accessory Structures Zoning Code update. Excluding Accessory Dwelling Units from structures that can be built within the setback cripples the zoning code update from the perspective of incentivizing people to build smaller, more affordable units. Currently garages within the setback are allowed to be converted into ADUs if they meet certain size restrictions. If this is already allowed, doesn't it make sense to allow people to build new ADUs within the setback to the same effect? Plus the *unamended* zoning update provides a great incentive to build smaller. Allowing smaller ADUs within the setback gives people more options in terms of size and location and therefore makes it easier for people to choose to build accessory dwelling units. Vancouver, BC has faced the same housing crisis that Portland is now facing and that city has found that ADUs have been a tremendously successful way of addressing the crisis. According to Alan Durning of the Sightline Institute, the city currently has ADUs on a full 43% of the single family lots, whereas Portland has ADUs on only 1% of single family lots. The zoning code update, *unamended*, will help get that number up so ADUs can become a real solution to the housing crisis, as they have in Vancouver, BC. Please pass the Accessory Structures Zoning Code update WITHOUT the amendment created by Commissioner Fritz.

Respectfully,

Taz Loomans, Project Architect, NCARB, LEED-ap
1639 SE 12th Ave | Portland, OR 97214 | t: 503.230.1293
c: 480.326.9662 | taz@communitecture.net

communitecture
ARCHITECTURE | PLANNING | DESIGN
gather round.

Moore-Love, Karla

From: Jon Perr <jon@perrspectives.com>
Sent: Tuesday, December 01, 2015 4:53 PM
To: Council Clerk – Testimony
Subject: For 12/2 Council Discussion of Fritz ADU Amendment (Item 1229)
Attachments: Perr_City_Council_on_ADU_Setbacks_120115.pdf

December 1, 2015

Subject: Agenda Item 1229 -- In Support of Fritz Amendment to 33.110.250 C.2.b Detached Accessory Structures

To the Council Clerk,

I am writing in support of the amendment proposed by Commissioner Amanda Fritz to prohibit accessory dwelling units (ADUs) within five (5) feet of residential property lines in R7, R5,
and R2.5 zones.

SUMMARY

In a nutshell, here are the reasons why:

1. Eliminating Setbacks Won't Help Housing Crisis...
Enabling garage conversions and new ADUs which tower over neighboring properties won't appreciably advance the laudable goals of increasing residential density and lowering rental prices.

2. ...But Will Create Real Conflict Between Neighbors...
Instead, the city of Portland will only succeed in pitting neighbor against neighbor as conflicts over privacy, noise and property devaluation increase in frequency and intensity. Neighbors will face new intrusions and even criminal trespassing from homeowner/ADU developers who will require access to their properties just to build and maintain the new or renovated structures.

3. ...While Eliminating Essential Safety Protections
Just as important, neighbors will lose the long-standing safety protections the 5-foot setbacks have provided for years. As a result, the very real risks from damaging water run-off and rapid spread of fire will be substantially increased.

4. Priority Number One Must Be Enforcement of Rules Against Short-Term Rentals
All the while, the one initiative which could make a large and immediate impact on the supply of rental housing—the strict enforcement of existing and new limitations on short-term vacation rentals by Airbnb, Homeaway, etc. hosts—remains untapped.

THE BACKGROUND

With the city already facing an affordable housing crisis and the prospect of roughly 250,000 new residents by 2035, new housing capacity is an urgent need. New options and incentives for apartment construction and multi-family housing as part of the Portland's Comprehensive Plan will surely help. But enabling homeowners to convert garages or build new accessory dwelling units on their neighbors' property lines won't.

For starters, there is little evidence to suggest that eliminating the 5 foot setbacks will incentivize marginally more ADU capacity. Most garage conversions are complete "tear downs" already, a charade abetted by the usually specious claim that "preexisting" walls or materials were used in construction. And if, as Commission Saltzman claims, that kind of housing for an "aging parent" or "older relatives" still "hasn't made it on its own yet," the problem surely isn't the setback distance. The economic and non-economic considerations in the decision to build an ADU won't change much by shrinking the setback distance.

That means Portland likely won't see that many more ADUs, only bigger ones which encroach on their neighbors' property and quality of life. But regardless of their ADU's size, Homeowners would simply be shift the sacrifice of land/property from themselves to their neighbors.

The implications for privacy, noise, aesthetics, safety and property values are significant, especially in Portland's current family-friendly neighborhoods. A home mid-block could find itself surrounded by up to four accessory dwelling units, blocking off views, limiting access to sunlight and dramatically reducing privacy. The risks from fire and water run-off, previously limited by 5 foot setbacks, will necessarily increase. Enclosed by others' walls on three sides, a non-ADU homeowner would face the decrease in his or her property value through no fault of his her own. These issues have already surfaced repeatedly in Southeast Portland garage conversions. As it turns out, good fences don't make good neighbors; five foot setbacks do. So much for the claim of one ADU developer that:

> Unlike speculative development being done by faceless corporations, developers of ADUs are primarily homeowner developers who have a vested interest in maintaining good, long term neighbor relations.

No, local experience shows that most ADU homeowner-developers have only a vested interest in their bottom line. And the cannibalization of hundreds of permanent rental units by impermissible short-stay services proves it.

A quick glance at Portland area listings on peer-to-peer rental services like Airbnb, Homeaway and VRBO (the latter two recently acquired by Expedia) shows the loss to available housing inventory. For example, a search of VRBO shows 409 properties in the Portland area, 150 of them houses. Virtually all of them are short-term stays of 1 to 5 days, despite Portland's requirement prohibiting rentals less than 30 days unless the owner lives in the house for at least 9 months a year. Similarly, a search of Homeaway reveals 394 short-term Portland properties, 147 of which are entire houses and 39 bungalows, cabins, cottages or studios. Worse still, the services have routinely failed to collect city taxes and display required permit numbers among other offenses. It's no wonder that Portland is suing Homeaway and VRBO for $2.5 million and eight smaller services for $1 million.

Meanwhile, ADU homeowners who are taking their properties of the long-term rental market in violation of city codes have faced few consequences to date. While some 130 homeowners have been warned and some 50 fined $500 or more, Portland's enforcement actions represent just a fraction of the inventory depletion.

For example, a search of Airbnb for "entire homes" accommodating between 2 and 4 people produces over 300 listings. Among these, roughly 90 are detached accessory structures. Another 200 or so are basement conversions (including "in-law apartments), with a smaller number of attic, attached garage or second story conversions. Once again, the majority are not rented in accordance with current zoning codes.

Adding insult to injury, the city of Portland is subsidizing some ADU-homeowners with taxpayer dollars. In these cases, the SDC waivers (which will continue through July 31, 2016) have only served to boost the vacation lodging options for out-of-town tourists, as opposed to increasing the supply of rental housing for Portland residents.

For all of these reasons, I urge the Portland City Council to vote for Commission Fritz's proposal "not allowing Accessory Dwelling Units to be placed within the side and rear setbacks in the R7, R5, and R2.5 zones."

Thank you for your consideration.

Sincerely,
Jon Perr

1733 SE 34th Avenue
Portland, OR 97214

187471

December 1, 2015

Subject: Agenda Item 1229 -- In Support of Fritz Amendment to 33.110.250 C.2.b Detached Accessory Structures

To the Council Clerk,

I am writing in support of the amendment proposed by Commissioner Amanda Fritz to prohibit accessory dwelling units (ADUs) within five (5) feet of residential property lines in R7, R5, and R2.5 zones.

SUMMARY

In a nutshell, here are the reasons why:

1. Eliminating Setbacks Won't Help Housing Crisis...
Enabling garage conversions and new ADUs which tower over neighboring properties won't appreciably advance the laudable goals of increasing residential density and lowering rental prices.

2. ...But Will Create Real Conflict Between Neighbors...
Instead, the city of Portland will only succeed in pitting neighbor against neighbor as conflicts over privacy, noise and property devaluation increase in frequency and intensity. Neighbors will face new intrusions and even criminal trespassing from homeowner/ADU developers who will require access to their properties just to build and maintain the new or renovated structures.

3. ...While Eliminating Essential Safety Protections
Just as important, neighbors will lose the long-standing safety protections the 5-foot setbacks have provided for years. As a result, the very real risks from damaging water run-off and rapid spread of fire will be substantially increased.

4. Priority Number One Must Be Enforcement of Rules Against Short-Term Rentals
All the while, the one initiative which could make a large and immediate impact on the supply of rental housing—the strict enforcement of existing and new limitations on short-term vacation rentals by Airbnb, Homeaway, etc. hosts—remains untapped.

THE BACKGROUND

With the city already facing an affordable housing crisis and the prospect of roughly 250,000 new residents by 2035, new housing capacity is an urgent need. New options and incentives for apartment construction and multi-family housing as part of the Portland's Comprehensive Plan will surely help. But enabling homeowners to convert garages or build new accessory dwelling units on their neighbors' property lines won't.

For starters, there is little evidence to suggest that eliminating the 5 foot setbacks will incentivize marginally more ADU capacity. Most garage conversions are complete "tear downs" already, a charade abetted by the usually specious claim that "preexisting" walls or materials were used in construction. And if, as Commission Saltzman claims, that kind of housing for an "aging parent" or "older relatives" still "hasn't made it on its own yet," the problem surely isn't the setback distance. The economic and non-economic considerations in the decision to build an ADU won't change much by shrinking the setback distance.

That means Portland likely won't see that many more ADUs, only bigger ones which encroach on their neighbors' property and quality of life. But regardless of their ADU's size, Homeowners would simply be shift the sacrifice of land/property from themselves to their neighbors.

The implications for privacy, noise, aesthetics, safety and property values are significant, especially in Portland's current family-friendly neighborhoods. A home mid-block could find itself surrounded by up to four accessory dwelling units, blocking off views, limiting access to sunlight and dramatically reducing privacy. The risks from fire and water run-off, previously limited by 5 foot setbacks, will necessarily increase. Enclosed by others' walls on three sides, a non-ADU homeowner would face the decrease in his or her property value through no fault of his her own. These issues have already surfaced repeatedly in Southeast Portland garage conversions. As it turns out, good fences don't make good neighbors; five foot setbacks do. So much for the claim of one ADU developer that:

> Unlike speculative development being done by faceless corporations, developers of ADUs are primarily homeowner developers who have a vested interest in maintaining good, long term neighbor relations.

No, local experience shows that most ADU homeowner-developers have only a vested interest in their bottom line. And the cannibalization of hundreds of permanent rental units by impermissible short-stay services proves it.

A quick glance at Portland area listings on peer-to-peer rental services like Airbnb, Homeaway and VRBO (the latter two recently acquired by Expedia) shows the loss to available housing inventory. For example, a search of VRBO shows 409 properties in the Portland area, 150 of them houses. Virtually all of them are short-term stays of 1 to 5 days, despite Portland's requirement prohibiting rentals less than 30 days unless the owner lives in the house for at least 9 months a year. Similarly, a search of Homeaway reveals 394 short-term Portland properties, 147 of which are entire houses and 39 bungalows, cabins, cottages or studios. Worse still, the services have routinely failed to collect city taxes and display required permit numbers among other offenses. It's no wonder that Portland is suing Homeaway and VRBO for $2.5 million and eight smaller services for $1 million.

Meanwhile, ADU homeowners who are taking their properties of the long-term rental market in violation of city codes have faced few consequences to date. While some 130 homeowners have been warned and some 50 fined $500 or more, Portland's enforcement actions represent just a fraction of the inventory depletion.

For example, a search of Airbnb for "entire homes" accommodating between 2 and 4 people produces over 300 listings. Among these, roughly 90 are detached accessory structures. Another 200 or so are basement conversions (including "in-law apartments), with a smaller number of attic, attached garage or second story conversions. Once again, the majority are not rented in accordance with current zoning codes.

Adding insult to injury, the city of Portland is subsidizing some ADU-homeowners with taxpayer dollars. In these cases, the SDC waivers (which will continue through July 31, 2016) have only served to boost the vacation lodging options for out-of-town tourists, as opposed to increasing the supply of rental housing for Portland residents.

For all of these reasons, I urge the Portland City Council to vote for Commission Fritz's proposal "not allowing Accessory Dwelling Units to be placed within the side and rear setbacks in the R7, R5, and R2.5 zones."

Thank you for your consideration.

Sincerely,
Jon Perr

1733 SE 34th Avenue
Portland, OR 97214

187471

Moore-Love, Karla

From: Patrick Donaldson <patrick@harkahq.com>
Sent: Monday, November 30, 2015 7:10 PM
To: Council Clerk – Testimony; Commissioner Fritz
Cc: Hales, Mayor; Commissioner Fish; Novick, Steve; Commissioner Saltzman
Subject: [User Approved] Last Minute ADU Amendment
Attachments: ADU Rules_15.11.30.pdf

Dear Commissioners:

My name is Patrick Donaldson, an architect of 18 years and a Portland resident of 12 years. I recently started a firm that focuses on low carbon design and life-styling. Data has shown that building small is the greatest way to lower one's carbon footprint. As a result, I am a huge proponent of ADUs in the city of Portland. I have designed over 13 ADUs in town as new construction, converted basements or converted garages. I listened to Commissioner Fritz's concerns and explanation for her proposed amendment and I would like express my disapproval.

The greatest challenge that faces home owners when trying to design an ADU is sifting through the zoning code rules. It is confusing and riddled with loopholes. I applaud the Planning Department's efforts to clarify and simplify the code, and I am in strong support of the new code as it is written (unamended).

The biggest loophole has to do with garage conversions on the property line. Every garage I have converted was not built to the standards to support a dwelling occupancy. So a game is played where we say we are going to upgrade the garage by saving one wall or we will prop up the walls and pour a proper footing, etc. Everyone knows that we will end up with a safer and more energy efficient product if we rebuild it. The proposed planning changes eliminate the need to dance around the rules and just do it right.

My clients that want an ADU in their backyard want to also minimize the impact on their yard. By allowing them to build on the property line they can maximize their yard space while being given an incentive to build a smaller unit. Without this incentive they usually maximize the 800sf as the economy of scale for building a 500sf unit v.s. an 800sf unit is almost nil. They will get a higher return on the 800sf unit through higher rents. The ability to push structures to the property line opens up yards to be more usable, sunny and airy. I would argue that in this particular case, the 5ft setback does not protect the light and air of the neighboring lots. Please see my attached sketch of the two scenarios.

Scenario 01 depicts an ADU on the property line that is maximized per the proposed changes. Scenario 02 shows a maximized two story ADU at the proposed 20ft limit while meeting the typical 5ft setback. The sun angles for Portland are shown at 12:00 noon on June 21, March/September 21, and December 21. As you can see, the shading effects are very similar in both cases. You will also notice that the two story unit which meets the setback is much more imposing to a person standing at their property line than the one story unit on the property line.

From a privacy standpoint, Scenario 01 is not allowed to have any windows looking into the neighbor's yard while Scenario 02 can have as many windows as they wish on both the first and the second floor, which will look directly into the neighbor's yard.

I find Commissioner Fritz's back property line situation to be very interesting because in my 12 years of working on residential projects in Portland, I cannot think of one time that I have encountered it. But I do think it is worth looking at:

Under the current rules and the proposed rules with her amendment, her neighbors could build two (2) story ADUs per Scenario 02. If maximized, there would be a 22ft wall (including her 4ft grade change) set back only 5ft. If they build them meeting the 5ft side yard setbacks they will provide a 10ft break in the middle of what I assume is a 50ft lot line. The proposed changes would allow her neighbors to build on 48ft of her rear property line (8ft more). However, the wall would be only 14ft (including her 4ft grade change). I would argue, per my sketches, that there would be little difference in the amount of shading her lot would experience, but there would be a significant difference in privacy, as the two story ADU would most definitely have windows looking into her yard. Furthermore, her amendment does not preclude her neighbors from building the same amount of accessory structure length along her property line as long as they are not ADUs.

I am not a proponent of short term rental because I think they eliminate any hope for true community building within and around a property. But short term renting is allowed by law and I fail to see how this amendment addresses the issue. If short term rentals are seen as a problem then you should deal with this issue directly and not slip in an amendment to the zoning code that will just introduce an opportunity for loopholes into the construction of ADUs.

My experience tells me that we will most certainly see some home owners build studios or detached bedroom units on their property line and rent them under air bnb. Some will build these accessory structures and then illegally convert them to ADUs after the fact. By the way, that will also be the result if you do not renew the SDC waiver and address the County's ridiculous property reassessment/tax nightmare.

I feel the proposed changes without the amendment are well thought out and provide a much needed clarification and simplification to the code. Please vote down this amendment which in my mind is not well thought through and does not actually solve any real issue.

Truly,

Patrick Donaldson, *LEED AP, CEM, CPHC*
Principal Architect
Patrick@HarkaHQ.com | c: 503.975.9471
107 SE Washington St, Ste 740 | Portland, OR 97214
HarkaHQ.com

HARKA

187471

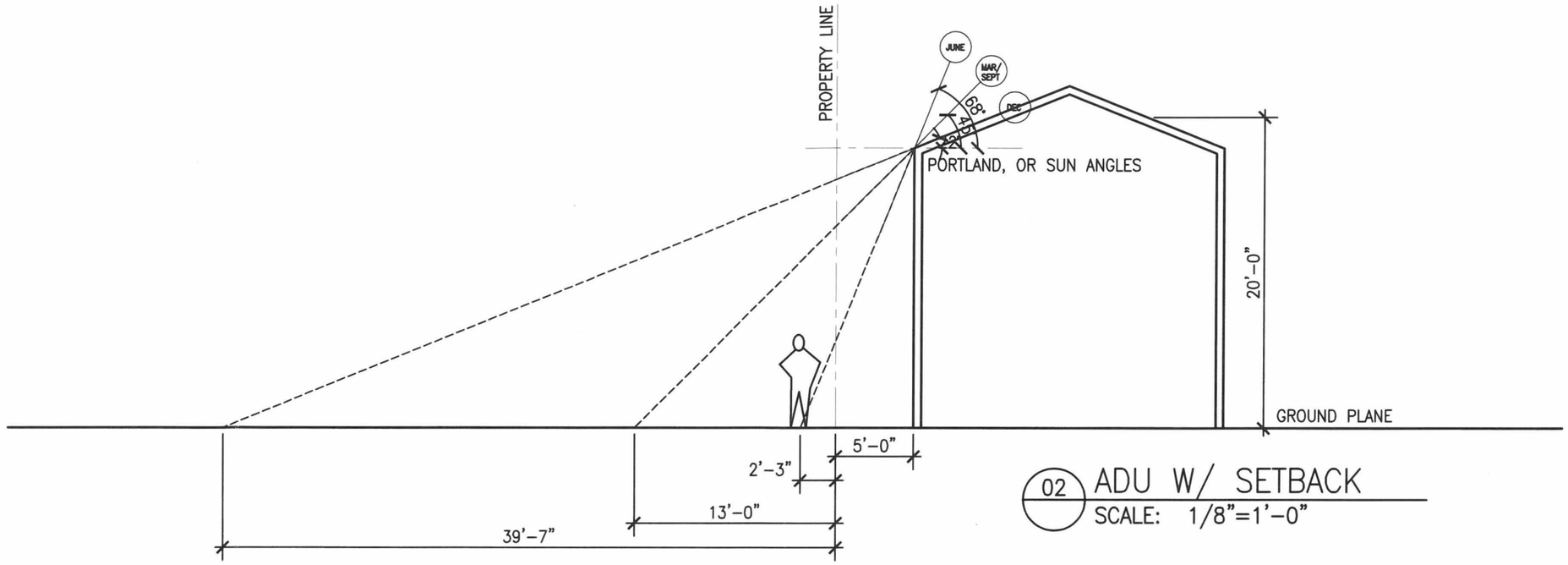

02 ADU W/ SETBACK
SCALE: 1/8"=1'-0"

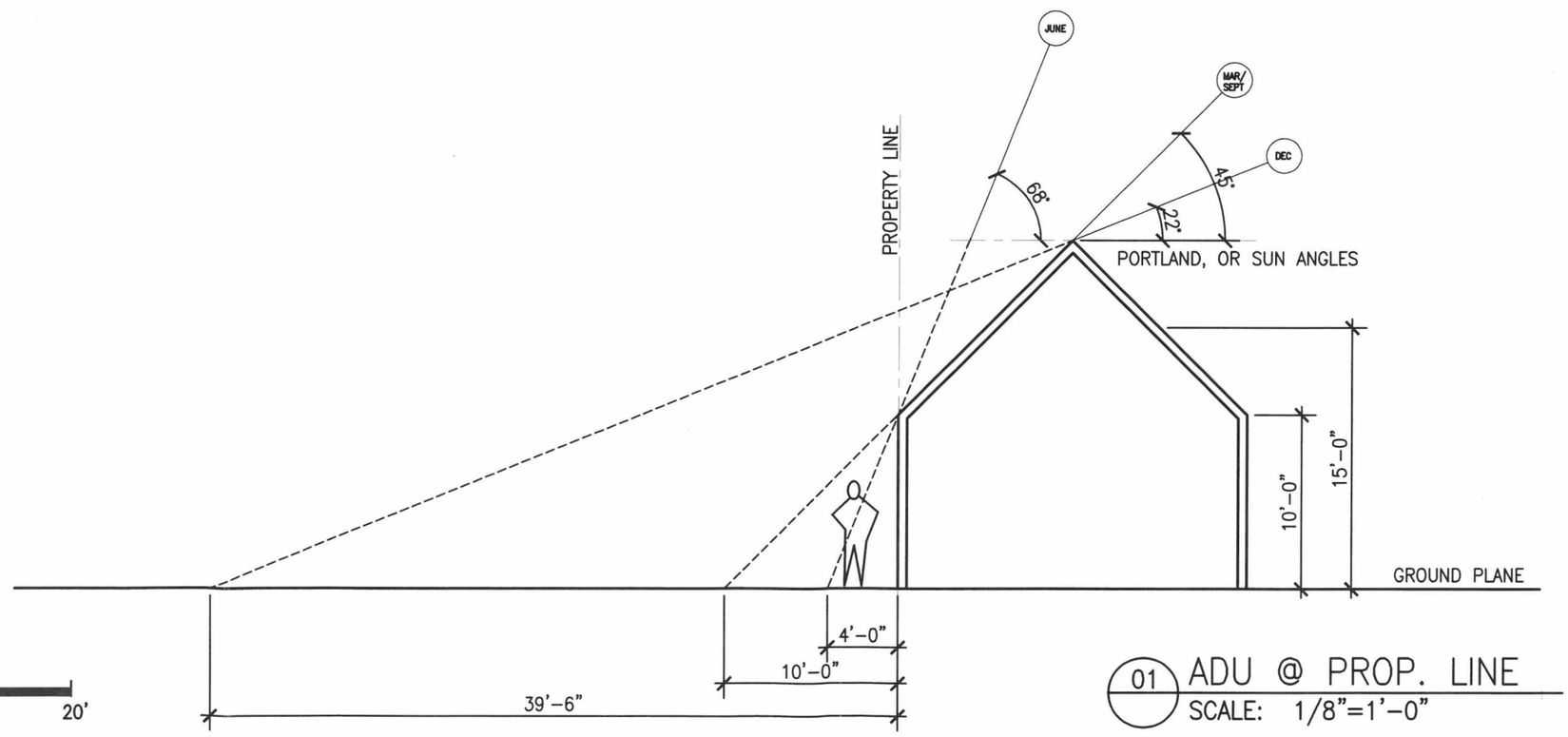

01 ADU @ PROP. LINE
SCALE: 1/8"=1'-0"

0 4' 8' 12' 20'

11.30.15

HARKA · LOW-CARBON ARCHITECTURE & LIFE

HARKA

107 SE WASHINGTON AVENUE, SUITE 740
PORTLAND, OR 97214 - HARKAHQ.COM

187471

Moore-Love, Karla

From: Dennis Whitworth <denway@comcast.net>
Sent: Monday, November 30, 2015 1:15 PM
To: Commissioner Fritz
Cc: Hales, Mayor; Commissioner Fish; Novick, Steve; Commissioner Saltzman; Council Clerk – Testimony
Subject: ADU

Commissioner Fritz,

Thank you for your 11th hour amendment to create a buffer/setback between properties for ADU's. It seems you have upset the http://accessorydwellings.org mind setters with some purely rational thinking.

Let's look at what could possibly happen if the ADU enthusiast's prevail. There is the possibility that four property owners could all build an ADU in the adjoining corner of their property. Roof eaves almost touching, no access between buildings for maintenance, and the too close for comfort possibility of a fire happening. Then there is the reality that there are people who own property who have no interest in building an ADU, who like the separation that they now have between their main house and the neighbor's main house. Basically building code setbacks established for safety and livability, today and yesteryear. The closer an ADU is built to the property line the more the no interest neighbor has to possibly being bombarded with noise/air pollution from the new ADU dweller. The argument from the accessory dwellings mind setters that on some properties where there currently is a garage within the setback and turning it into an ADU should be no big deal. They fail to state the one difference between the two, and that is that a garage is and always has been a non-habitable structure. But by converting it to a habitable structure, it now becomes, as I said above, a potential noise/air polluter, closer to the not interested neighbor. Keeping a 5'-0 setback makes perfect sense. The ADU builders can have their building, minus the 5'-0, and those who have no interest in building an ADU have more breathing room, not too much to ask.

One other thing I would like to mention. Another argument from the accessory dwellings mind setters that an ADU creates affordable housing. We already know that some of these ADU's that are being built are not being used for long term dwellers/renters. There being used as AirB&B money makers. Short term rentals. Not affordable housing. And since you cannot mandate how the ADU can be used, the stretch to call it affordable housing holds no water.

Hoping you will be joined by other council members,
Dennis Whitworth
1725 SE 34th Ave
Portland, Or 97214

187471

Moore-Love, Karla

From: Wendy Warren <wenwarr@live.com>
Sent: Monday, November 30, 2015 10:36 AM
To: Hales, Mayor; Commissioner Fish; Commissioner Fritz; Commissioner Saltzman; Novick, Steve; Council Clerk – Testimony
Subject: Proposed ADU Zoning Code Change

Greetings,

As long-time home owners in Portland, we believe the first priority for any community, however large or small, is to creat guidelines and boundaries that help people get along. If accepted, the proposed zoning change to ZERO set back for ADUs will fail utterly in this endeavor.

As ADUs pop up throughout our neighborhood, we are seeing that some people naturally act with respect for their neighbors; others, particularly those with profit-earning motives, appear to be struggling to consider the harmony of the neighborhood as a whole when making their decisions. It's understandable. It's an age-old conundrum, isn't it? We considered Air BNB as an additional income, but turning our historically family-focused neighborhood into a commercial area (and this IS what Air BNB is doing) is upsetting to the majority of our neighbors--and that's with a five-foot set back. As our city leaders, you carry the ability to guide us to more harmony or more dispute. PLEASE make the decision that leads and guides us to remain the true community a Portland neighborhood can be--caring, safe for our kids, courteous and respectful of all, not simply motivated by greed.

Tim and Wendy Blough

----- Forwarded Message -----
From: Jenny Seilo <jpritchard98@yahoo.com>
To: "mayorhales@portlandoregon.gov" <mayorhales@portlandoregon.gov>; "nick@portlandoregon.gov" <nick@portlandoregon.gov>; Commissioner Fritz <amanda@portlandoregon.gov>; "dan@portlandoregon.gov" <dan@portlandoregon.gov>; Steve Novick <steve.novick@portlandoregon.gov>; "cctestimony@portlandoregon.gov" <cctestimony@portlandoregon.gov>
Cc: "andre.baugh@portlandoregon.gov" <andre.baugh@portlandoregon.gov>; Matt Grumm <matt.grumm@portlandoregon.gov>; "laura.hanson@portlandoregon.gov" <laura.hanson@portlandoregon.gov>; "Jillian.Detweiler@portlandoregon.gov" <Jillian.Detweiler@portlandoregon.gov>; Robert McCullough <robert@mresearch.com>; Rod Merrick <merrick_map@yahoo.com>; "clark@pbsenv.com" <clark@pbsenv.com>
Sent: Sunday, November 29, 2015 8:56 PM
Subject: Comment to Proposed Accessory Structure Zoning Code Update

Commissioners and Mayor,

My name is Jenny Seilo, a resident of the Eastmoreland neighborhood and I sent an email to this group on 10/5/15 voicing my concerns regarding potential safety concerns arising from allowing ADUs to be used as Air BnB rentals in residential neighborhoods. The email is attached below for your reference.

I am now writing to voice my concerns regarding the proposed amendments to the City of Portland's Building Code as it relates to ADUs to be voted on this Wednesday 12/2. I understand the proponents of ADUs (presumably Portland residents that have built or are planning to build one) have been vocal in their support of the proposed revised building code, however I am writing you as Portland resident who has recently been negatively impacted by an ADU built in my neighbor's backyard (and what feels like mine) with the intent to rent it out via Air BnB. Therefore, I ask you to consider the revised building code not only from the perspective of those that will benefit and profit from building ADUs, but also from those that may be negatively impacted and consider revising the proposed ADU Zoning Code as follows:

1) Permitting Process – Currently and as proposed, obtaining a permit to build an ADU is a separate and discreet process from obtaining a permit to use the structure as a short term rental. Permit for intended use (if required) comes after the ADU has been built. No notice is required to abutting neighbors including if ADU is to be built for the intended use as a short term rental (e.g. Air BnB) until after the ADU has been built and is ready to be put in operation.
** Recommended Revision – Disclosure of the intended use of a proposed ADU should be required as part of the building permit process and if an ADU is being built for income producing short term rental purposes (e.g. Air BnB), adjacent neighbors as well as the neighbourhood association should be given a comment period to voice their support or concern for the proposed development which should be taken into consideration. This would make the permitting process more in line with that for a proposed commercial development, which in essence an ADU for short term rental purpose is (income producing asset for the benefit of the owner of the property).

2) Setback - Current code requires min. 5' setback from the abutting property with Council considering an amendment to allow smaller dwelling structures (10' high walls, 24' long max) to be built with zero set back from property line.
** Recommended Revision - Maintain the minimum 5' setback as not allowing for any setback encroaches upon the abutting properties (both visually and acoustically) and does not allow for sufficient space for the impacted neighbor(s) to be able to screen out the new structure. A zero setback is particularly problematic in Portland neighborhoods with small lots where the new ADU may end up being built just as close or closer to some of the abutting property homes as it is to the primary lot home.

3) Height - Council is considering an amendment to increase max height of ADUs from 18' to 20' irrespective of the height of the primary lot home.
** Recommended Revision - Max height of ADU should be the lesser of 20' or height of primary lot home in order to maintain character of primary home, neighborhood and minimize impact on abutting neighbors.

4) Exterior Finish Materials – Code currently written and proposed so that finish materials on the detached covered accessory structure must "be the same or visually match in type, size and placement, the exterior finish material of the primary structure".
**Recommended Revision – Be more specific in defining "placement" so that visually the ADU must look the same as the primary structure when viewing the ADU and primary structure from the same direction. It is critical that as we increase our already dense neighborhoods, we do not take away from the aesthetic appeal of the neighborhood. In the example of the ADU being built in my neighbor's backyard, the primary structure is entirely cedar lap siding other than < 5% of the home being vertical beadboard (around the front door only) and concrete (on the bottom third of the front of the house). However the exterior of the ADU is less than 50% cedar lap siding with the rest being vertical beadboard and smooth concrete (e.g. stucco), making it so aesthetically the new ADU does not blend in with the character of the primary home or the neighborhood in general.

Lastly, given the significant increase in the number of ADUs that have been built in Portland since the City decided to waive SDC fees, the City should actively solicit feedback from neighbors adjacent to properties where ADUs have been built as well as the neighborhood associations to find out what is working and what is not from the perspective of the impacted neighbor.

Thank you for your consideration.

Sincerely,
Jenny Seilo

From: Jenny Seilo <jpritchard98@yahoo.com>
To: "mayorhales@portlandoregon.gov" <mayorhales@portlandoregon.gov>; "nick@portlandoregon.gov" <nick@portlandoregon.gov>; Commissioner Fritz <amanda@portlandoregon.gov>; "dan@portlandoregon.gov" <dan@portlandoregon.gov>; "commissioner-novick@portlandoregon.gov" <commissioner-novick@portlandoregon.gov>
Sent: Monday, October 5, 2015 9:34 PM
Subject: Air BnB Hotel Being Built in Neighbor's Backyard

Mayor Hales and Commissioners Saltzman, Fritz, Fish, Novick,

My name is Jenny Seilo and I live in the Eastmoreland neighborhood. I am writing you regarding the neighbor abutting the north side of my property at 3622 SE Lambert Street who is building a 800 sf ADU in their backyard and also finishing off their basement in order to rent both out via Air BnB.

I have various issues related to the building of the ADU (e.g., lack of notification to neighbors – we found out when the lumber was being delivered last week; building permit issued irrespective of long-term intended use of structure; minimal 5 feet setback from back lot line regardless of lot sizes of abutting properties; etc.), but I am explicitly reaching out to you concerning the safety of my three children, ages 1, 4 and 7, who spend a significant portion of their day playing in our backyard, directly adjacent to where the new neighborhood "hotel" is located. Further, there are 12 children, 12-years or under directly surrounding the property where the hotel is being built.

Adding a hotel five feet from my property's backyard makes it so that I no longer feel safe letting my children play in our yard without being outside with them. Although I realize you run the risk when renting or buying any home that you don't know who your neighbors will be and if there will be safety concerns, but having a hotel in your backyard, in a residentially zoned area where conceivably there could be up to 365 different people staying there throughout the year, makes it obvious there is not any thoroughly vetted land use policy in place for ADUs, specifically being built for Air BnB purposes.

I am very disappointed that what I believe was a well intentioned policy to allow Air BnB rentals in Portland homes and ADUs in order for the City of Portland to capture some additional lodging tax revenue will have unintended consequences. However, I refuse to let that consequence be a safety issue that directly affects my family and neighborhood.

Therefore, I ask of you two things:
1) As my City of Portland elected Mayor and Commissioners, what can be done to alleviate my safety concerns from a policy standpoint?
2) Put yourself in my shoes and advise what you would do as a parent if you lived where I live to ensure that your family remained safe?

I appreciate your consideration and forthcoming response.

Jenny Seilo
Resident, City of Portland

Moore-Love, Karla

From: Jenny Seilo <jpritchard98@yahoo.com>
Sent: Sunday, November 29, 2015 8:56 PM
To: Hales, Mayor; Commissioner Fish; Commissioner Fritz; Commissioner Saltzman; Novick, Steve; Council Clerk – Testimony
Cc: Baugh, Andre; Grumm, Matt; Hanson, Laura; Detweiler, Jillian; McCullough, Robert; Rod Merrick; clark@pbsenv.com
Subject: Comment to Proposed Accessory Structure Zoning Code Update

Commissioners and Mayor,

My name is Jenny Seilo, a resident of the Eastmoreland neighborhood and I sent an email to this group on 10/5/15 voicing my concerns regarding potential safety concerns arising from allowing ADUs to be used as Air BnB rentals in residential neighborhoods. The email is attached below for your reference.

I am now writing to voice my concerns regarding the proposed amendments to the City of Portland's Building Code as it relates to ADUs to be voted on this Wednesday 12/2. I understand the proponents of ADUs (presumably Portland residents that have built or are planning to build one) have been vocal in their support of the proposed revised building code, however I am writing you as Portland resident who has recently been negatively impacted by an ADU built in my neighbor's backyard (and what feels like mine) with the intent to rent it out via Air BnB. Therefore, I ask you to consider the revised building code not only from the perspective of those that will benefit and profit from building ADUs, but also from those that may be negatively impacted and consider revising the proposed ADU Zoning Code as follows:

1) Permitting Process – Currently and as proposed, obtaining a permit to build an ADU is a separate and discreet process from obtaining a permit to use the structure as a short term rental. Permit for intended use (if required) comes after the ADU has been built. No notice is required to abutting neighbors including if ADU is to be built for the intended use as a short term rental (e.g. Air BnB) until after the ADU has been built and is ready to be put in operation.

** Recommended Revision – Disclosure of the intended use of a proposed ADU should be required as part of the building permit process and if an ADU is being built for income producing short term rental purposes (e.g. Air BnB), adjacent neighbors as well as the neighbourhood association should be given a comment period to voice their support or concern for the proposed development which should be taken into consideration. This would make the permitting process more in line with that for a proposed commercial development, which in essence an ADU for short term rental purpose is (income producing asset for the benefit of the owner of the property).

2) Setback - Current code requires min. 5' setback from the abutting property with Council considering an amendment to allow smaller dwelling structures (10' high walls, 24' long max) to be built with <u>zero</u> set back from property line.

** Recommended Revision - Maintain the minimum 5' setback as not allowing for any setback encroaches upon the abutting properties (both visually and acoustically) and does not allow for sufficient space for the impacted neighbor(s) to be able to screen out the new structure. A zero setback is particularly problematic in Portland neighborhoods with small lots where the new ADU may end up being built just as close or closer to some of the abutting property homes as it is to the primary lot home.

3) Height - Council is considering an amendment to increase max height of ADUs from 18' to 20' irrespective of the height of the primary lot home.

** Recommended Revision - Max height of ADU should be the lesser of 20' or height of primary lot home in order to maintain character of primary home, neighborhood and minimize impact on abutting neighbors.

4) Exterior Finish Materials – Code currently written and proposed so that finish materials on the detached covered accessory structure must "be the same or visually match in type, size and placement, the exterior finish material of the primary structure".

**Recommended Revision – Be more specific in defining "placement" so that visually the ADU must look the same as the primary structure when viewing the ADU and primary structure from the same direction. It is critical that as we increase our already dense neighborhoods, we do not take away from the aesthetic appeal of the neighborhood. In the example of the ADU being built in my neighbor's backyard, the primary structure is entirely cedar lap siding other than < 5% of the home being vertical beadboard (around the front door only) and concrete (on the bottom third of the front of the house). However the exterior of the ADU is less than 50% cedar lap siding with the rest being vertical beadboard and smooth concrete (e.g. stucco), making it so aesthetically the new ADU does not blend in with the character of the primary home or the neighborhood in general.

Lastly, given the significant increase in the number of ADUs that have been built in Portland since the City decided to waive SDC fees, the City should actively solicit feedback from neighbors adjacent to properties where ADUs have been built as well as the neighborhood associations to find out what is working and what is not from the perspective of the impacted neighbor.

Thank you for your consideration.

Sincerely,

Jenny Seilo

From: Jenny Seilo <jpritchard98@yahoo.com>
To: "mayorhales@portlandoregon.gov" <mayorhales@portlandoregon.gov>; "nick@portlandoregon.gov" <nick@portlandoregon.gov>; Commissioner Fritz <amanda@portlandoregon.gov>; "dan@portlandoregon.gov" <dan@portlandoregon.gov>; "commissioner-novick@portlandoregon.gov" <commissioner-novick@portlandoregon.gov>
Sent: Monday, October 5, 2015 9:34 PM
Subject: Air BnB Hotel Being Built in Neighbor's Backyard

Mayor Hales and Commissioners Saltzman, Fritz, Fish, Novick,

My name is Jenny Seilo and I live in the Eastmoreland neighborhood. I am writing you regarding the neighbor abutting the north side of my property at 3622 SE Lambert Street who is building a 800 sf ADU in their backyard and also finishing off their basement in order to rent both out via Air BnB.

I have various issues related to the building of the ADU (e.g., lack of notification to neighbors – we found out when the lumber was being delivered last week; building permit issued irrespective of long-term intended use of structure; minimal 5 feet setback from back lot line regardless of lot sizes of abutting properties; etc.), but I am explicitly reaching out to you concerning the safety of my three children, ages 1, 4 and 7, who spend a significant portion of their day playing in our backyard, directly adjacent to where the new neighborhood "hotel" is located. Further, there are 12 children, 12-years or under directly surrounding the property where the hotel is being built.

Adding a hotel five feet from my property's backyard makes it so that I no longer feel safe letting my children play in our yard without being outside with them. Although I realize you run the risk when renting or buying any home that you don't know who your neighbors will be and if there will be safety concerns, but having a hotel in your backyard, in a residentially zoned area where conceivably there could be up to 365 different people staying there throughout the year, makes it obvious there is not any thoroughly vetted land use policy in place for ADUs, specifically being built for Air BnB purposes.

I am very disappointed that what I believe was a well intentioned policy to allow Air BnB rentals in Portland homes and ADUs in order for the City of Portland to capture some additional lodging tax revenue will have unintended consequences. However, I refuse to let that consequence be a safety issue that directly affects my family and neighborhood.

Therefore, I ask of you two things:
1) As my City of Portland elected Mayor and Commissioners, what can be done to alleviate my safety concerns from a policy standpoint?

187471

2) Put yourself in my shoes and advise what you would do as a parent if you lived where I live to ensure that your family remained safe?

I appreciate your consideration and forthcoming response.

Jenny Seilo
Resident, City of Portland

187471

Moore-Love, Karla

From: Tristan Wagner <tristan.wagner@gmail.com>
Sent: Sunday, November 29, 2015 6:38 PM
To: Hales, Mayor; Commissioner Fish; Commissioner Fritz; Novick, Steve; Commissioner Saltzman; Council Clerk – Testimony
Subject: Accessory Structures Zoning Code Updates

Dear City Council Members,

As a Portland citizen and homeowner, I encourage you to pass the accessory structures zoning code updates -- **without** amendment.

Two of my neighbors have existing ADUs that provide additional housing in my neighborhood with minimal negative impact to me. I believe ADUs are one positive solution to some of the difficulties many Portlanders face finding housing these days.

I think the proposed efforts to simplify regulations related to ADUs are wonderful. It makes perfect sense to me that ADUs should receive at least the same treatment as garages and other similar structures.

Please consider Portland's future, and **do not amend** the proposed zoning code updates to give preferential treatment to garages over ADUs.

Thank you,

Tristan Wagner
3828 N Haight Ave
Portland, OR 97227
503-941-0216

187471

Moore-Love, Karla

From: Kol Peterson <kolpeterson@gmail.com>
Sent: Sunday, November 29, 2015 12:39 PM
To: Hales, Mayor; Commissioner Fish; Commissioner Fritz; Novick, Steve; Commissioner Saltzman; Council Clerk – Testimony
Subject: Accessory Structure Zoning Code Update testimony
Attachments: Accessory Structure Code Update testimony_11_29_2015.pdf

City Commissioners,

Attached, please find my written testimony for the upcoming City Council vote on the proposed code changes for detached accessory structures.

Thank you for your review and consideration.
-Kol

187471

November 29th, 2015
Portland City Council
1221 SW 4th Avenue
Portland, OR 97204

Re: Accessory Structure Zoning Code update – written testimony

Members of Portland's City Council,

I encourage City Council to pass the Accessory Structure Zoning Code update. I do not support the late amendment that disallows ADUs in small, 1-story detached structures in setbacks.

I've written two extensive blog posts about these updates and the late amendment, which you may wish to read if you have the time. In summary, these updates represent an incremental, dramatic improvement of the existing codes for accessory structures.

The current codes for accessory structures are confusing. I have taught approximately 1,000 Portland homeowners about them in monthly ADU classes and in on-site consultations. The updates help unify and simplify the codes for accessory structure types in a manner that will help citizens more easily navigate their way through the development process.

BPS/BDS have gone through an extensive public process with these proposals and the proposals have been extremely popular with those audiences. Having personally been a part of the focus group and attended some of the hearings, I'll also note that BPS has done a fantastic job writing the updates, and soliciting input and feedback. The updates have also been extremely popular amongst attendees of my classes and among the individual homeowners with whom I consult.

The late amendment targeting ADUs is not helpful in regards to simplifying and unifying the zoning code, and it would (unintentionally) make developing affordable housing in residential zones more difficult and more expensive.

Portland is now in the map nationally as the leader in ADUs. This is largely due to the SDC waiver passed by City Council in 2010 and due to our relatively good ADU codes. While the SDC waiver is set to lapse on July 31st, 2016, a fraction of homeowners will still choose to development (affordable) ADUs in spite of the disproportionately huge SDC fees that they will face ($17K). However, it is key to make the capital cost of ADU development of as affordable as possible because they are developed by amateur homeowner developers don't have access to tremendous amounts of capitol.

The new Accessory Structure Zoning codes will truly help people to afford staying in Portland if they wish, and the late amendment would be counterproductive.

Sincerely,

Kol Peterson
Organizer of City-wide ADU Tour
Owner of Accessory Dwelling Strategies LLC
Editor of AccessoryDwellings.org

187471

Moore-Love, Karla

From: PALMERI Jordan <PALMERI.Jordan@deq.state.or.us>
Sent: Wednesday, November 25, 2015 10:43 AM
To: Council Clerk – Testimony
Subject: FW: DEQ comments on Accessory Structure Code
Attachments: OregonDEQ_PDXCityCouncil_FINAL.pdf

From: PALMERI Jordan
Sent: Wednesday, November 25, 2015 9:54 AM
To: 'mayorcharliehales@portlandoregon.gov'; "mayorhales@portlandoregon.gov'; 'Nick@portlandoregon.gov'; 'amanda@portlandoregon.gov'; 'Steve.Novick@portlandoregon.gov'; 'dan@portlandoregon.gov'; 'novick@portlandoregon.gov'
Cc: 'matt.grumm@portlandoregon.gov'; 'Camille.Trummer@portlandoregon.gov'; 'jim.blackwood@portlandoregon.gov'; 'tim.crail@portlandoregon.gov'; 'katie.shriver@portlandoregon.gov'; 'Wood, Sandra'; 'Nameny, Phil'
Subject: DEQ comments on Accessory Structure Code

Hello Portland City Council Members,

Attached is a letter to help inform the discussion of the Accessory Structures Code Update next Wednesday, December 2nd.

Please let me know if you have any questions.

Thanks,
Jordan Palmeri

Jordan Palmeri
Green Building Program
Oregon Department of Environmental Quality
http://www.deq.state.or.us/lq/sw/wasteprevention/greenbuilding.htm

811 SW 6th Avenue, Portland, OR, 97204
503.229.6766 DIRECT
503.229.6977 FAX

187471

Oregon

Kate Brown, Governor

Department of Environmental Quality
Agency Headquarters
811 SW Sixth Avenue
Portland, OR 97204-1390
(503) 229-5696
FAX (503) 229-6124
TTY 711

November 25, 2015

Dear Portland City Council:

I am writing to provide information to help inform the December 2nd discussion of the Accessory Structures Zoning Code Update Project. DEQ supports increasing the supply and demand of smaller housing options like accessory dwelling units (ADUs) because of the substantial energy and materials savings realized by smaller housing options.

Based on DEQ survey research, I would like to clarify how ADUs are being used in the City of Portland and how the proposed zoning code updates, as originally approved by the Planning and Sustainability commission, directly address barriers to ADU development.

In the summer of 2013, Oregon DEQ along with partners from the City of Portland and Metro, designed and conducted the largest survey of ADU owners in the country. Specifically, this survey covered 673 ADU owners in Portland, 91 in Eugene, and 66 in Ashland, which comprised all permitted units through the end of 2012. Exactly 290 ADU owners in Portland completed the survey making the results representative of the population of Portland ADUs with a sampling error of +/- 4.38%. Thus, the results are a reliable representation of ADUs in the Portland market.

Survey results found that 80% of all ADUs in Portland were being used as long-term rental housing. Twenty percent of the long-term rental housing was being used as affordable housing that rents for less than $500/month. Approximately 10% of the ADUs were being used as office spaces or extensions of the main home's living space and about 5% were being used as short-term rentals.

The survey also showed that the 2 biggest barriers to ADU development are cost and design challenges. The Accessory Structures Code Update, as originally approved by the Planning and Sustainability Commission, directly addresses design challenges like setbacks, height limits, and matching criteria that many ADU owners reported through the DEQ survey. Below are links to the DEQ's raw survey data and interpretation report for ADUs for more information.

We encourage the City of Portland to continue to be a leader in ADU development. These units can contribute to more affordable and lower impact housing in Portland. Please let me know if you have any questions.

ADU Survey for Portland, Eugene, and Ashland, Oregon
September 2013 | http://www.deq.state.or.us/lq/sw/docs/ADUReportFRev.pdf

ADUs in Portland, Oregon: Evaluation and interpretation of a survey of ADU owners
June 2014 | http://www.deq.state.or.us/lq/sw/docs/SpaceEfficient/adusurveyinterpret.pdf

Sincerely,

Jordan Palmeri
Oregon Department of Environmental Quality
Green Building Program
Palmeri.jordan@deq.state.or.us | 503-229-6766

Moore-Love, Karla

From: Fritz, Amanda
Sent: Wednesday, November 18, 2015 12:00 PM
To: City Elected Officials Exec's; City Elected Officials; Nameny, Phil
Cc: Moore-Love, Karla
Subject: FW: Case file number: LU 14-248295 AD

Colleagues, I will be forwarding emails I have received in the past, regarding ADUs being built close to property lines.

Amanda

Amanda Fritz
Commissioner, City of Portland

The City of Portland is a fragrance free workplace. To help me and others be able to breathe, please avoid using added fragrances when visiting City offices.

To help ensure equal access to City programs, services and activities, the City of Portland will reasonably modify policies/procedures and provide auxiliary aids/services to persons with disabilities. Call 503-823-2036, TTY 503-823-6868 with such requests or visit http://www.portlandoregon.gov/bibs/article/454403

From: Linda Saward [mailto:tomlinda5555@comcast.net]
Sent: Thursday, January 29, 2015 5:37 PM
To: Fritz, Amanda <Amanda.Fritz@portlandoregon.gov>
Subject: Fwd: Case file number: LU 14-248295 AD

Dear Commissioner,

This is a copy of the email we sent to Mark Walhood following a telephone conversation with him regarding our neighbor's proposed (already underway) development.

From: Linda Saward <tomlinda5555@comcast.net>
Date: January 29, 2015 5:18:22 PM PST
To: Mark Walhood <Mark.Walhood@portlandoregon.gov>
Subject: Case file number: LU 14-248295 AD

Date: January 29, 2015

To: Mark Walhood, City Planner

From: Tom and Linda Saward

503-228-4081
3115 N.W. Wilson St.
Portland, OR 97210

Dear Mr. Walhood,

As we discussed with you on the telephone, we are opposed to Mark Larson's proposal, case file number LU 14-248295 AD, to develop an Accessory Dwelling Unit from the existing outbuilding in his yard at 3103 N.W. Wilson St. (built as a stained glass studio by the previous owners, the Wrenches). Our objections are numerous, including our previous complaints, which went unanswered. As Tom mentioned, much work has already been done, apparently without permit? Unfortunately we did not put our previous complaints into writing, and the city did not look into our complaints or reply as we were told they would.

Before Mr. Larson obtained his original deck permit (2003?), Lisa from city planning made an onsite visit, in which Lynn Jennings (no longer living with Mr. Larson) and I (Linda Saward) discussed the siting of the deck. I made it clear to Lisa that I wanted the building no closer than 2 feet from our property. She agreed that was reasonable and doable. Tom and I left town for a few weeks, and returned to find a 1foot variance had been granted. I spoke to someone from the city by telephone, who said they would look into Lisa's meeting notes and get back to me. That did not happen. Mr. Larson proceeded to build closer than the granted variance; the distance between our parallel gutters
is maybe 3, or 4 inches maximum. While Mr. Larson was building we had our property line surveyed, and made another complaint to the city, which was also ignored. The deck plans Mr. Larson filed showed some north to south separation of the deck and home. The deck was also overbuilt to the south, so there is an overlap, not a separation, of the home and deck N to S. Among the concerns cited on the permit were parking consideration, air circulation, safety access, etc. Upon completion of the deck Mr. Larson built a wooden platform extension from the new deck 12 feet into the driveway southward, full width. Now he is extending wide wooden stairs and platforming from the deck to his outbuilding. Every time he lights his barbeque our sunroom fills with smoke. A wooden gate has been built across the driveway, cutting off a 2nd offstreet parking space from the property. Also the parking strip in front of the house was landscaped with large boulders, to deter parking in front of the house. A neighbor, formerly friends with Lynn, confirmed to me this was done with that specific intent. We are concerned about the fire hazard of a wooden continuum from Mr. Larson's home to his deck to his outbuilding (which contains a wood stove), particularly with the deck structure too close to our home. The parking reduction is a lesser, but pertinent, concern. One neighbor rentor has sublet to at least 3 other parties, causing 4 vehicles from one dwelling vying for street parking. We would prefer to see no increase in what is already problematic parking.

Regarding the current application, we do not want a secondary dwelling (potentially a rental or otherwise occupiable structure) nextdoor. The outbuilding in question is about 3 1/2 feet from our property line. The outbuilding itself is only 50 1/2 inches from the eave to our retaining wall. Our retaining wall is built 8" INSIDE our property line.
Please, when your onsite visit is made, take into account the permit infringements already made, and do not permit Mr. Larson to create a plumbed "Accessory Dwelling Unit" which could become a rental or otherwise occupiable dwelling in our "Single-Dwelling Residential 5,000 base zone", and affect our property value as the very close deck structure has already done.

In summary, we are opposed to the said proposal for multiple reasons.

1) Fire safety

2) Siting (less than 5 ft. to our property line) violation.
3) Zoning (affecting property value) violation
4) Parking availability

Thank you for your consideration. Please return email me to confirm you have received, and read, and registered this objection.

Sincerely, Tom and Linda Saward

Moore-Love, Karla

From: Fritz, Amanda
Sent: Wednesday, November 18, 2015 12:09 PM
To: City Elected Officials Exec's; City Elected Officials; Nameny, Phil
Cc: Moore-Love, Karla
Subject: FW: Air BnB Hotel Being Built in Neighbor's Backyard

Note these concerns are even with a five foot setback.

Amanda

Amanda Fritz
Commissioner, City of Portland

The City of Portland is a fragrance free workplace. To help me and others be able to breathe, please avoid using added fragrances when visiting City offices.

To help ensure equal access to City programs, services and activities, the City of Portland will reasonably modify policies/procedures and provide auxiliary aids/services to persons with disabilities. Call 503-823-2036, TTY 503-823-6868 with such requests or visit http://www.portlandoregon.gov/bibs/article/454403

From: Jenny Seilo [mailto:jpritchard98@yahoo.com]
Sent: Monday, October 05, 2015 9:34 PM
To: Hales, Mayor <mayorcharliehales@portlandoregon.gov>; Commissioner Fish <nick@portlandoregon.gov>; Commissioner Fritz <amanda@portlandoregon.gov>; Commissioner Saltzman <dan@portlandoregongov.onmicrosoft.com>; commissioner-novick@portlandoregon.gov
Cc: Paul Seilo <paul.seilo@ch2m.com>; McCullough, Robert <Robert@mresearch.com>; merrick_map@yahoo.com; bob@southeastuplift.org; Heather Eldon <heathereldon@comcast.net>; Bobby Eldon <bobbyeldon@comcast.net>; Dave King <dking@xplane.com>; jen@shesawthings.com; bearto@gmail.com; aulicino@hevanet.com; Hillary Howarth <hillary_helm@yahoo.com>
Subject: Air BnB Hotel Being Built in Neighbor's Backyard

Mayor Hales and Commissioners Saltzman, Fritz, Fish, Novick,

My name is Jenny Seilo and I live in the Eastmoreland neighborhood. I am writing you regarding the neighbor abutting the north side of my property at 3622 SE Lambert Street who is building a 800 sf ADU in their backyard and also finishing off their basement in order to rent both out via Air BnB.

I have various issues related to the building of the ADU (e.g., lack of notification to neighbors – we found out when the lumber was being delivered last week; building permit issued irrespective of long-term intended use of structure; minimal 5 feet setback from back lot line regardless of lot sizes of abutting properties; etc.), but I am explicitly reaching out to you concerning the safety of my three children, ages 1, 4 and 7, who spend a significant portion of their day playing in our backyard, directly adjacent to where the new neighborhood "hotel" is located. Further, there are 12 children, 12-years or under directly surrounding the property where the hotel is being built.

Adding a hotel five feet from my property's backyard makes it so that I no longer feel safe letting my children play in our yard without being outside with them. Although I realize you run the risk when renting or buying any home that you don't know who your neighbors will be and if there will be safety concerns, but having a hotel in your backyard, in a residentially zoned area where conceivably there could be up to 365 different people staying there throughout the year, makes it obvious there is not any thoroughly vetted land use policy in place for ADUs, specifically being built for Air BnB purposes.

I am very disappointed that what I believe was a well intentioned policy to allow Air BnB rentals in Portland homes and ADUs in order for the City of Portland to capture some additional lodging tax revenue will have unintended consequences. However, I refuse to let that consequence be a safety issue that directly affects my family and neighborhood.

Therefore, I ask of you two things:
1) As my City of Portland elected Mayor and Commissioners, what can be done to alleviate my safety concerns from a policy standpoint?
2) Put yourself in my shoes and advise what you would do as a parent if you lived where I live to ensure that your family remained safe?

I appreciate your consideration and forthcoming response.

Jenny Seilo
Resident, City of Portland

187471

Agenda Item 1164 | TESTIMONY | 9:45 AM TIME CERTAIN

ACCESSORY STRUCTURES ZONING CODE UPDATE PROJECT

IF YOU WISH TO **SPEAK** TO CITY COUNCIL, **PRINT** YOUR **NAME, ADDRESS, AND EMAIL.**

NAME (print)	ADDRESS AND ZIP CODE	Email
✓ Kol Peterson	4227 NE 10th Ave, 97211	kolpeterson@gmail.com
✓ Eli Spevak	4757 NE Going St. 97218	eli@avacnet.com
yes ✓ ~~Dana Denny~~	~~1322 SE 60th Ave 97215~~	~~dennydana@gmail.com~~
✓ Susan Beal	3131 SE Woodward 97202	susan.beal@gmail.com
✓ ~~Joe Robertson~~	1973 SE Duncan Dr. Hillsboro 97123	JOE@SHELTER-SOLUTIONS.NET
✓ ELAINE BUDLONG	8311 NE GOING PL, PDX 97220	toyrecoveryinc@yahoo.com

Date 11-12-15

Page 1 of 1

187471

November 12, 2015

Portland City Council
1221 SW 4th Avenue
Portland, OR 97204

Re: Accessory Structures Project – Code Revision proposal

Mayor Hales and Members of Portland's City Council,

Kudos to Planning and Sustainability Commission staff for assembling and leading an effective focus group through the code update process for accessory structures in Portland. It was a pleasure to take part.

I fully support the recommendations that came out of this process and are now before you for final consideration and approval.

A few ideas generated in our group were not taken into consideration because they were deemed too tangential to the narrow focus of this code update or better matches for consideration as part of the upcoming neighborhood code update. With this code update now underway, I'd like to re-pitch a couple ideas that weren't included in the accessory structure draft recommendations that would require minimal actual code language changes to implement.

1. *Add 'duplex' to list of structure types to which an ADU can be added.* Duplexes fall into a grey area between single and multi-dwelling development patterns. In most instances, I think duplexes found in Portland's single dwelling zones tend to share more in character and traditional look with single homes than apartment buildings – such that adding an ADU to them would be very much like adding an ADU to a single dwelling residence.
2. *Allow one ADU per dwelling unit in single dwelling zones as part of planned development processes.* When a property is divided into multiple lots through a subdivision process, each lot can have a primary dwelling + ADU. This would mimic that situation in instances where a planned development process is used (so all homes are on the same lot). It would be appropriate to require a Planned Development proposal with ADUs go through a full Type III review process to ensure thorough public vetting.

Sincerely,

Eli Spevak
Orange Splot LLC

Moore-Love, Karla

From: Bonny McKnight <bonnymcknight@gmail.com>
Sent: Wednesday, November 11, 2015 9:39 PM
To: Moore-Love, Karla
Subject: Testimony for Thursday, November 12, 2015 City Council Meeting - Agenda Item 1164
Attachments: access structures codecouncil111215.pdf; ATT00001.htm

Karla

Please provide this to each member of the City Council on my behalf as part of the public record for the Thursday, November 12, 2015 Council Agenda Item 1164.

Thank you.

Bonny McKnight
bonnymcknight@gmail.com
503-919-4331

187471

November 12, 2015

Mayor Hales
Commissioner Saltzman
Commissioner Novick
Commissioner Fritz
Commissioner Fish

Re: Accessory Structures Zoning Code Update
November 12, 2015 Council Agenda Item 1164

Dear Members of City Council:

Adoption of this zoning code update is premature. Accept the proposal without adopting it.

Changing single family neighborhood code should be handled as part of larger policy directives being developed as part of the Comprehensive Plan work as well as work being done by the Residential Infill Committee. Both of these efforts are attempting to respect the fabric of different neighborhoods throughout the city, not set a single standard for how they change.

The danger in adopting this code is that it deals with form based changes to established single family residential areas. It also repeats the repudiated approach of one-size-fits-all despite the effort of larger planning efforts to build more cohesive systems of living in Portland by finding multiple ways of protecting neighborhood livability.

It should be clear by now that single family neighborhoods are made up by the people living near each other as a cooperative group, not by the size or shape of the structures in which they live. Otherwise dwelling design could build a neighborhood regardless of how the day to day life of living there took place.

Neighborhood livability must include emerging issues such as noise and environmental factors like the preservation of large trees. These and other issues need cooperative agreement rather than code inflexibility. That is how a single family neighborhood can function effectively and this code does not take that approach.

You may adopt this project but you cannot effectively implement it. More importantly, using this approach will generate more and more complaints that waste staff time and public money without any real chance of providing a real solution. It is time to stop generating opposition to change simply because of the way we seek to make it happen.

Instead refer this proposal to be part of the Comprehensive Plan processing and the Residential Infill Committee work in order to filter it through more complete policy considerations.

I ask that you accept this work but not adopt it.

Bonny McKnight
bonnymcknight@gmail.com
503-919-4331

187471

Parsons, Susan

From: J R Merrick <jrm@merrick-archplan.com>
Sent: Tuesday, November 10, 2015 4:41 PM
To: Council Clerk – Testimony
Subject: Re: Accessory Structures Zoning Code Update , Council Calendar November 12, 2015
Attachments: 2015.11.12 Auxiliary Dwelling revisions.pdf

Please distribute attached testimony

Rod Merrick, AIA NCARB
ENA Land Use
Portland, OR 503.771.7762

Subject: **Accessory Structures Zoning Code Update** , November 10, 2015

To: Council Clerk at CCTestmony@portlandoregon.gov

From: Rod Merrick, Co-chair land Use Committee, Eastmoreland NA

3627 SE Cooper Street Portland, OR

The "auxiliary dwelling unit" (ADU) a backyard or basement apartment of up to 800 SF was adopted following much public debate to provide options for owners to house multi-generational families, to downsize in place or provide apartments under their oversight. The Bureau of Planning and Sustainability has been frustrated with the slow acceptance of these units until recently recorded increases. That growth is directly enhanced by the elimination of *system development charges* for building permits and the growing realization that these ADUs can be used for temporary rentals (AIRBNB, for example). On the downside the County Assessor's Office is beginning to view these as a zone change effectively doubling density and raising land values.

Under pressure from developers of ADUs and planning staff, proposed regulatory changes on the November 12th Council Calendar will allow greater height, larger size (in many cases), reduced setbacks, and elimination of design standards with the idea of making the units more attractive to develop.

There is reason to be concerned about three provisions in particular:

- raising the height limit to 20 feet will allow full 2-story units with roof decks and accompanying high sidewalls within 3 feet of adjacent lots;
- removing design standards that require compatibility with the existing house paves the way for prefab or stock designs to proliferate without regard to the surroundings;
- larger units allowed on narrow, skinny, and corner lots further compromises lot and density standards. We have recently seen a corner lot in the R5 zone developed with attached houses with auxiliary units that appears to be and is in fact 4-unit apartment block.

Overall we expect that the proposal will lead to greater dissatisfaction from neighbors with this infill strategy and accelerated demolitions and replacement of single family housing stock that compromises the values expressed in the Comprehensive Plan.

While the ENA land use committee has supported existing auxiliary dwelling standards, we have seen *no testing or analysis of the likely impacts* of the latest proposal and recommend against adoption except through a land use process involving public process.

Thanks for your consideration.

187471

Moore-Love, Karla

From: Gabriele Hayden <gabriele.hayden@gmail.com>
Sent: Wednesday, September 30, 2015 12:47 PM
To: Council Clerk – Testimony

To whom it may concern:
I am writing in support of the proposed changes to the Accessory Structures code. During this rental state of emergency, any way that zoning codes can be amended to increase neighborhood density is fantastic. Without encroaching on neighbors any more than is currently done, this will allow homeowners to build small ADUs that still leave a usable backyard. Before this code change I was not interested in building an exterior ADU--now I'm seriously considering it, as I could build something inexpensive and modest more or less on the footprint of my old garage, but without being stuck with the exact dimensions of that garage--which is super old and falling down.

Also, as stated in the draft language, this makes things more even across types of accessory structures. One can easily imagine outdoor accessory buildings built to 30' that are being used as dwelling units despite the rules (which I think would be fine with proper regulation, since I'm all for density in whatever form, including bigger ADUs for larger families. . . but it isn't fair to people who do follow the rules)

I'd also like to say that it would be great if you could in the future allow 2 ADUs per lot (one interior and one exterior), since this would allow much greater density. Otherwise I think you'll see Portland going the way of Vancouver BC, where 3 story houses are divided up without permits into 2-3 units, plus sometimes a laneway house. Finally, I would love to see a waiver to allow people to have basement ADUs over 800 sq feet if that is the size of their existing basement and it's still less than 75% of the rest of the house.

Thanks, Portland, for leading the way on this, and consider this email one more vote for smoothing the way for density, density, density. I grew up in Boring, and miss my goats and my donkey and my pony. . . but I don't miss the 20 min walk to the bus stop AT ALL. There are plenty of beautiful towns in Oregon where one can live less densely. Let's make Portland affordable for those who want to squeeze together.

Sincerely,
Gabriele Hayden
1624 N Emerson St
Portland, OR 97217
(Overlook neighborhood)