City of Portland, Oregon
Bureau of Development Services
Land Use Services
FROM CONCEPT TO CONSTRUCTION

Carmen Rubio, Commissioner
David Kuhnhausen, Interim Director
Phone: (503) 823-7300
TTY: 711
www.portland.gov/bds

RECORDER
Please stamp the County Recorder's copy of the recording sheet and return with the attached decision to City of Portland, BDS 299/5000/BDS LUR

Multnomah County Official Records
J.D. Riddle, Deputy Clerk

2024-012645
03/05/2024 04:01:25 PM

NOT-NOT Pgs=10 Stn=61 ATJS
$50.00 $11.00 $10.00 $60.00

$131.00

Date: 2/9/24

To: Interested Person

From: Staci Monroe, Land Use Services
503-865-6516 / staci.monroe@portlandoregon.gov

NOTICE OF A TYPE II DECISION IN YOUR NEIGHBORHOOD

The Bureau of Development Services has approved a proposal in your neighborhood. The mailed copy of this document is only a summary of the decision. The reasons for the decision and responses to any public comments are included in the version located on the BDS website https://www.portland.gov/bds/zoning-land-use/news/notices. Enter the land use case file number in the keyword search. If you disagree with the decision, you can appeal. Information on how to appeal the decision is included at the end of this decision.

CASE FILE NUMBER: LU 23-103655 DZ

NEW 4-STORY BUILDING

GENERAL INFORMATION

Applicant: Cole Poland | Holst Architecture
123 NE 3rd Ave., Ste 310 | Portland, OR 97232
cpoland@holstarc.com | 503-233-9856

Owner/Agent Kate Piper | City of Portland | Portland Housing Bureau
1900 SW 4th Ave Ste 7007 | Portland, OR 97201

Party of Interest: James Lee | Community Development Partners
126 NE Alberta Street, Suite 202 | Portland, OR 97211

Site Address: 4947 N WILLIAMS AVE

Legal Description:	BLOCK 1 LOT 1, WILLIAMS AVE ADD 2; BLOCK 1 LOT 3 S 74.35' OF LOT 20, WILLIAMS AVE ADD 2; BLOCK 1 LOT 18, WILLIAMS AVE ADD 2; BLOCK 1 LOT 19, WILLIAMS AVE ADD 2; BLOCK 1 N 110.65' OF LOT 20, WILLIAMS AVE ADD 2; CANCEL ACCOUNT, WILLIAMS AVE ADD 2; CANCEL ACCOUNT, WILLIAMS AVE ADD 2; BLOCK 1 LOT 2, WILLIAMS AVE ADD 2
Tax Account No.:	R916500010, R916500050, R916500450, R916500480, R916500510, R916500451, R916500481, R916500030
State ID No.:	1N1E22AC 00100, 1N1E22AC 00300, 1N1E22AC 01200, 1N1E22AC 01100, 1N1E22AC 00200, 1N1E22AC 00101
Quarter Section:	2530
Neighborhood:	Humboldt, contact Peach Anderson at humboldtneighborhood@gmail.com
Business District:	Williams Vancouver Bus. Assoc., contact at info@williamsdistrict.com & Soul District Business Association, contact at info@nnebaportland.org
District Coalition:	Northeast Coalition of Neighborhoods, contact at info@necoalition.org
Plan District:	NONE
Other Designations:	NONE
Zoning:	CM2 (MU-U)d – Commercial Mixed Use 2 zone with a Design Overlay
Case Type:	DZ – Design Review
Procedure:	Type II, an administrative decision with appeal to the Design Commission.

Proposal:
The applicant requests Design Review approval for a 4-story building on the property at the southwest corner of the intersection of N Williams and NE Alberta. The building program consists of 75 units of affordable housing including one-bedroom, two-bedroom, and three-bedroom units. Ground floor use consists of a mixture of housing units, building lobby, property management offices, and community amenity spaces. The site consists of a courtyard amenity and 31 surface parking spaces accessed off NE Alberta west of the building. Exterior building materials consist of fiber cement panel and lap siding with accents of cedar siding (tongue and groove), stucco, vinyl windows and aluminum storefront systems. Areas for wall murals are identified on the northwest and southeast corners of the building.

Two approaches to address stormwater are proposed – onsite infiltration via drywells and flow-through planters with discharge to combined sewer. The former requires DEQ approval due to contamination on the site. In the event DEQ does not approve the on-site infiltration an alternative has been designed for the site.

Design Review is required for new development in the Design Overlay Zone that does not utilize the Design Standards in Section 33.420.050.

Relevant Approval Criteria:
In order to be approved, this proposal must comply with the approval criteria of Title 33, Portland Zoning Code, available online at https://www.portland.gov/code/33. The relevant criteria are:

- Portland Citywide Design Guidelines

CONCLUSIONS

The design review process implements the Design overlay zone, strengthening these areas as places designed for people. Design review supports development that builds on context, contributes to the public realm, and provides high quality and resilient buildings and public spaces. The proposal meets the applicable design guidelines and therefore warrants approval.

ADMINISTRATIVE DECISION

Approval of a new 4-story residential building and associated site improvements per the approved site plans, Exhibits C-1 through C-59, signed and dated 2/7/24, subject to the following conditions:

A. A finalized building permit must be obtained to document the approved project. As part of the application submittal, the following development-related conditions (B through E) must be noted on each of the site plans or included as a separate sheet. The sheet on which this information appears must be labeled "ZONING COMPLIANCE PAGE - Case File LU 23-103655 DZ." All requirements must be graphically represented on the site plan, landscape, or other required plan and must be labeled "REQUIRED."

B. At the time of permit submittal, a signed Certificate of Compliance form (https://www.portland.gov/bds/documents/certificate-compliance-design-and-historic-resource-review-approvals) must be submitted to ensure the permit plans comply with the Design/Historic Resource Review decision and approved exhibits.

C. The three art murals in the locations and sizes identified on Exhibits C5 and C6 must be approved through the City's Original Art Mural Program before the issuance of the Certificate of Occupancy for the building.

D. Evergreen shrubs that grow to the height of the transformer must be placed along its north and west sides and lower landscaping between the taller shrubs and sidewalk and west property line to provide a layer effect to soften the impact of the utility object.

E. No field changes allowed.

Staff Planner: Staci Monroe

Decision rendered by: _____ **on 2/7/24**
By authority of the Director of the Bureau of Development Services

Decision mailed: 2/9/24

Last date to Appeal: February 23, 2024 by 4:30 pm
Effective Date (if no appeal): February 26, 2024 Decision may be recorded on this date

Kimberly Tallant, Principal Planner

City of Portland
Bureau of Development Services
1900 SW Fourth Ave, #5000
Portland, OR 97201

Date: February 26, 2024

_____
Representative

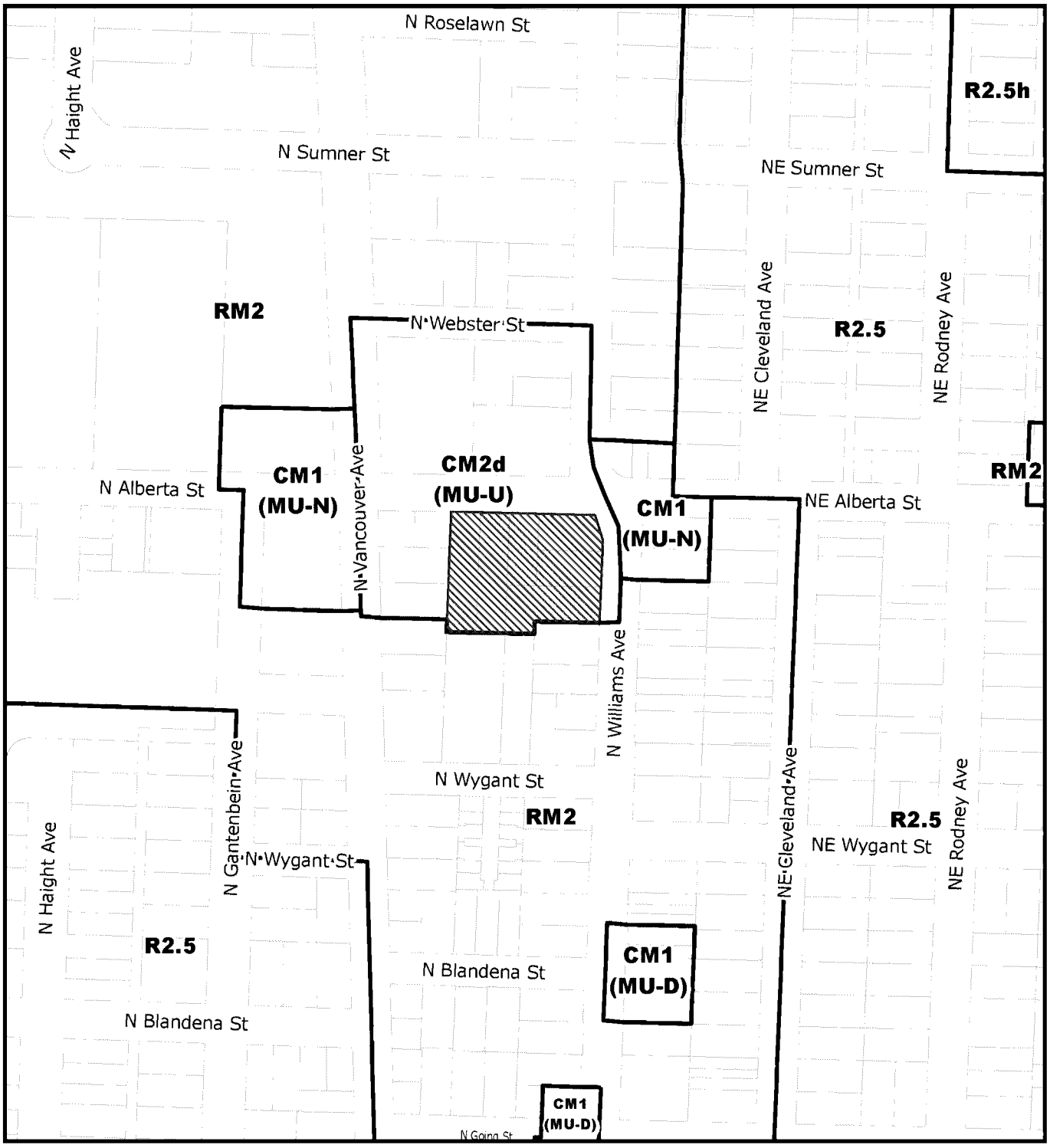

For Zoning Code in Effect Post October 1, 2022

ZONING

Site

File No. LU 23 - 103655 DZ
1/4 Section 2530
Scale 1 inch =200 feet
State ID 1N1E22AC 100
Exhibit B Nov 16, 2023

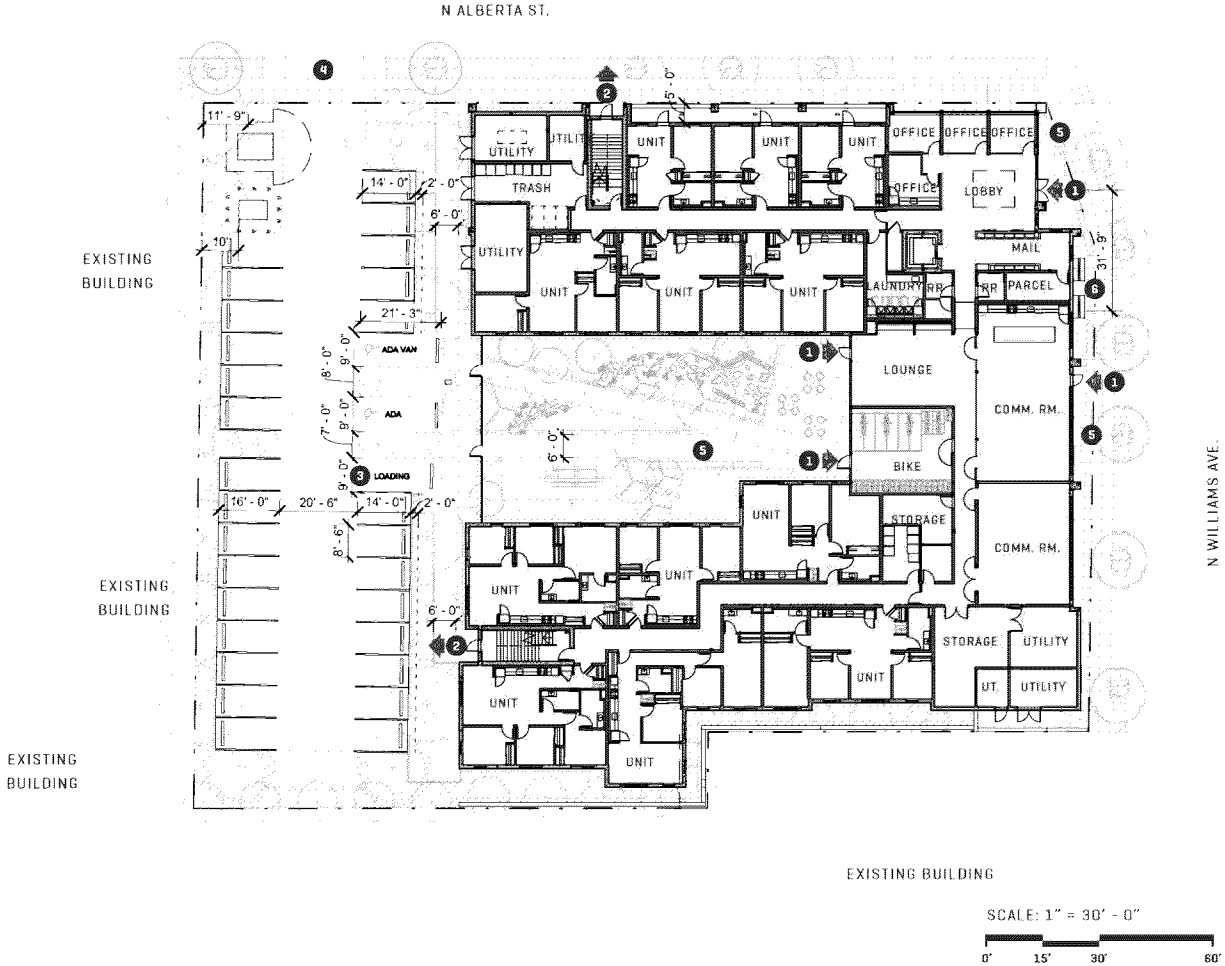

48' - 2", 4 STORY TYPE 5A CONSTRUCTION

SITE AREA: 41,210 SF

BUILDING FOOTPRINT: 20,920 SF

- —— - PROJECT PROPERTY LINE
1. BUILDING ENTRY
2. EXIT
3. LOADING
4. NEW CURB CUT, REF CIVIL
5. BENCH
6. SHORT-TERM BIKE PARKING (4)

SURFACE PARKING LOT MINIMUM PARKING SPACE DIMENSIONS
PER TABLE 266-4

	PROVIDED
90 DEGREE: 8'-6" WIDTH X 16'-0" DEPTH*	28
LOADING TYPE B: 9'-0" WIDTH X 19'-0" DEPTH	1
ACCESSIBLE: 9'-0" WIDTH X 20'-0" DEPTH	2
TOTAL PROVIDED	**31**

*33.266.130.F.4.a UP TO 2 FEET OF THE FRONT OF THE SPACE AS MEASURED FROM A LINE PARALLEL TO THE DIRECTION OF THE BUMPER OF A VEHICLE USING THE SPACE MAY BE LANDSCAPED AREA.

REQUIRED SHORT-TERM BIKE PARKING: 1 PER 20 UNITS 75 / 20 = 4
PROVIDED: 4

Approved
City of Portland
Bureau of Development Services
Planner
Date 02-07-2024
* This approval applies only to the reviews requested and is subject to all conditions of approval. Additional zoning requirements may apply.

HOLST

STRONG PROPERTY
4931-4947 N WILLIAMS AVE
PORTLAND, OR 97217

DESIGN REVIEW
01.30.2024

title : SITE PLAN
LU NO. LU 23-103655 DZ Exhibit C.1
sheet : C.4

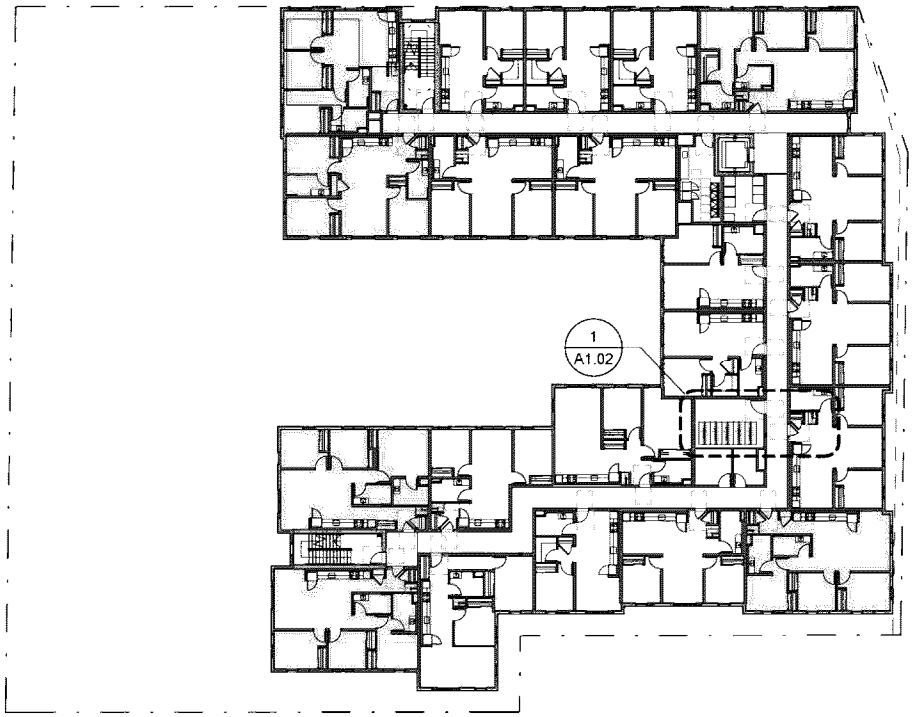

LEGEND

- 1-BEDROOM
- 2-BEDROOM
- 3-BEDROOM
- AMENITY SPACES
- OFFICE
- MECH / B.O.H. / CIRC.

SCALE: 1" = 30' - 0"

0' 15' 30' 60'

N

Approved
City of Portland
Bureau of Development Services

Planner _____

Date 02-07-2024

* This approval applies only to the reviews requested and is subject to all conditions of approval. Additional zoning requirements may apply.

HOLST

© 2023 HOLST ARCHITECTURE INC

STRONG PROPERTY
4931-4947 N WILLIAMS AVE
PORTLAND, OR 97217

DESIGN REVIEW
01.30.2024

title : LEVEL 01 FLOOR PLAN
LU NO. LU 23-103655 DZ Exhibit C.3
sheet : C.6

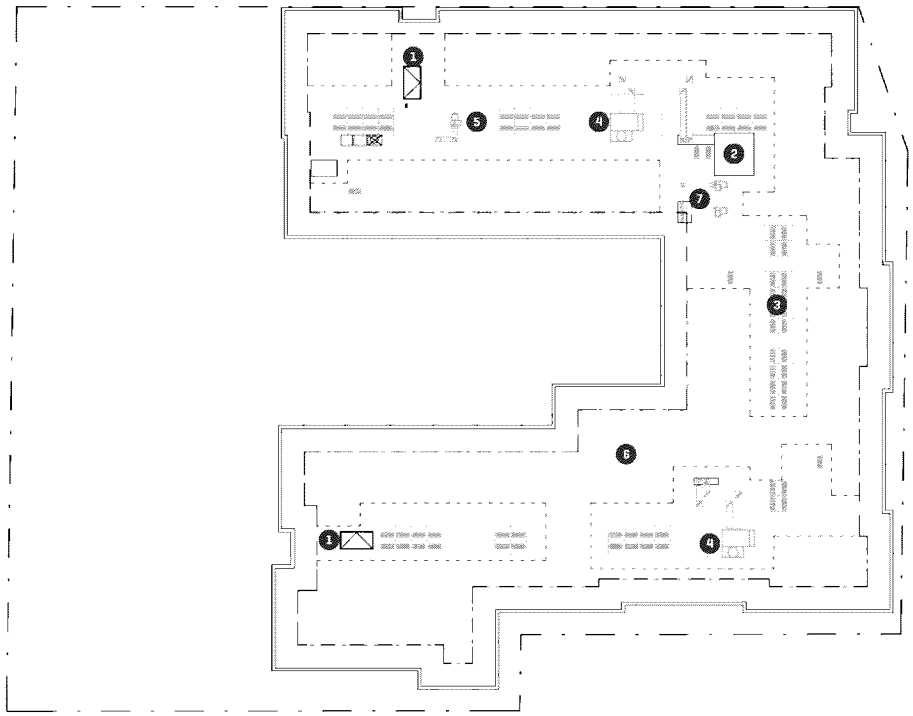

1. ROOF ACCESS HATCH
2. ELEVATOR OVERRUN
3. HEAT PUMP CONDENSING UNITS
4. DEDICATED OUTDOOR AIR SYSTEM
5. EXHAUST FAN
6. AREA FOR FUTURE PV PANELS (HATCHED)
7. LAUNDRY MAKE-UP AIR

SCALE: 1" = 30' - 0"

0' 15' 30' 60'

N

Approved
City of Portland
Bureau of Development Services
Planner
Date 02-07-2024
* This approval applies only to the reviews requested and is subject to all conditions of approval. Additional zoning requirements may apply.

HOLST

STRONG PROPERTY
4931-4947 N WILLIAMS AVE
PORTLAND, OR 97217

DESIGN REVIEW
01.30.2024

title : ROOF PLAN
LU NO. LU 23-103655 DZ Exhibit C.4
sheet : C.7

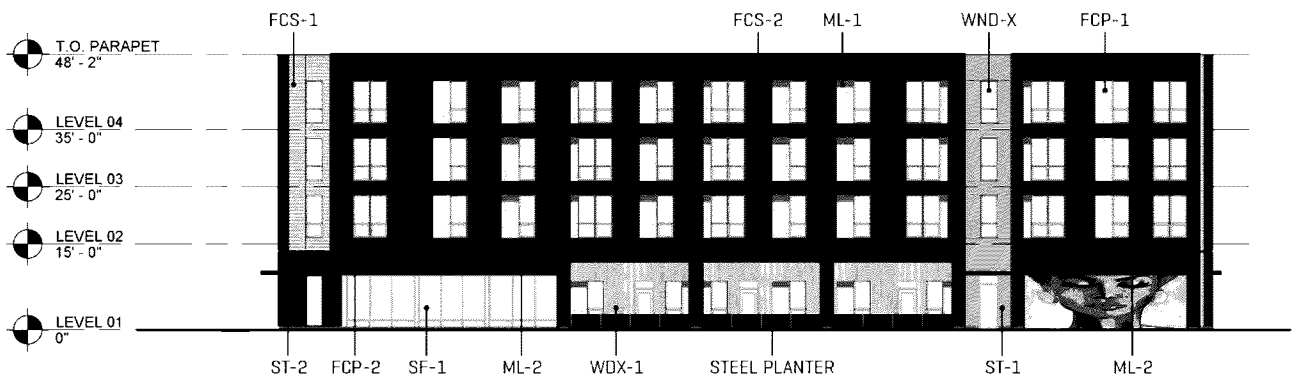

NORTH ELEVATION
1" = 20'-0"

*ART SHOWN FOR LOCATION ONLY (NOT ACTUAL DESIGN)

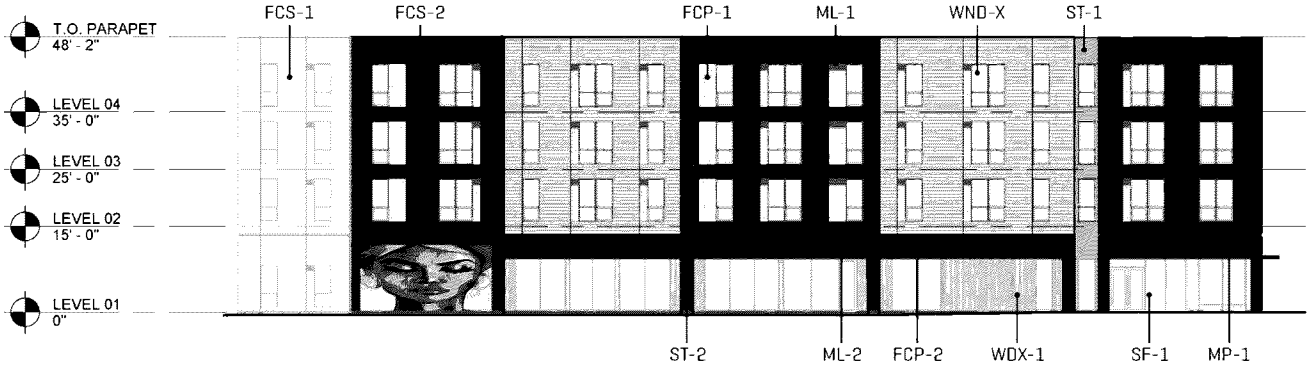

EAST ELEVATION
1" = 20'-0"

*ART SHOWN FOR LOCATION ONLY (NOT ACTUAL DESIGN)

0' 10' 20' 40'

FCP-1
FIBER CEMENT PANEL - SMOOTH - ADOBE

FCP-2
FIBER CEMENT PANEL - SMOOTH - DARK

FCS-1
FIBER CEMENT SIDING - LAP - LIGHT

FCS-2
FIBER CEMENT SIDING - LAP - DARK

ML-1
METAL LOUVER - ADOBE

ML-2
METAL LOUVER - DARK

MF-X
CUSTOM COLOR METAL FLASHING

SF-1
ALUMINUM STOREFRONT AND ENTRANCES

WND-X
VINYL WINDOW

WDX-1
T&G CEDAR SIDING

CONC-1
SMOOTH FINISH CONCRETE

MP-1
CUSTOM COLOR PLATE STEEL CANOPY

ST-1
STUCCO - ADOBE

ST-2
STUCCO - DARK

Approved
City of Portland
Bureau of Development Services

Planner

Date 02-07-2024

* This approval applies only to the reviews requested and is subject to all conditions of approval. Additional zoning requirements may apply.

HOLST

STRONG PROPERTY
4931-4947 N WILLIAMS AVE
PORTLAND, OR 97217

DESIGN REVIEW
01.30.2024

title : BUILDING ELEVATIONS

LU NO. LU 23-103655 DZ Exhibit C.8

sheet : C.11

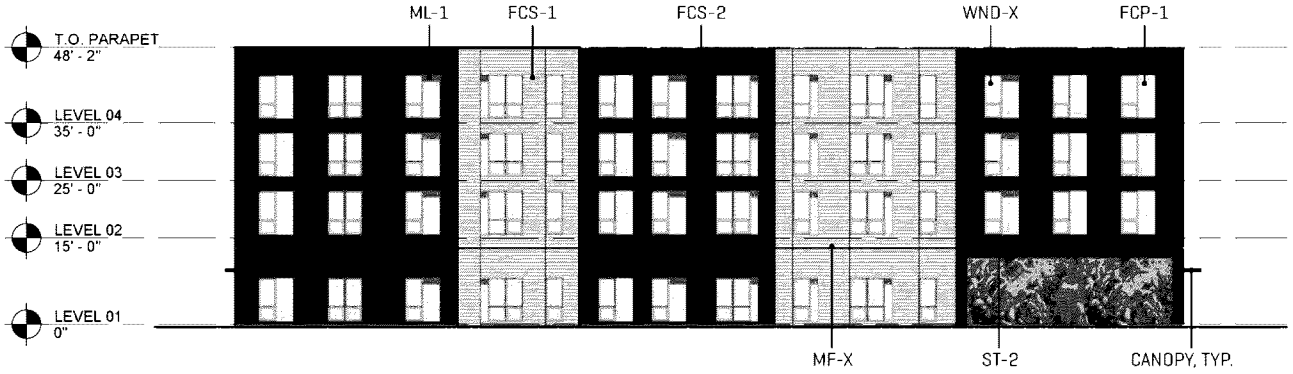

SOUTH ELEVATION
1" = 20'-0"

*ART SHOWN FOR LOCATION ONLY (NOT ACTUAL DESIGN)

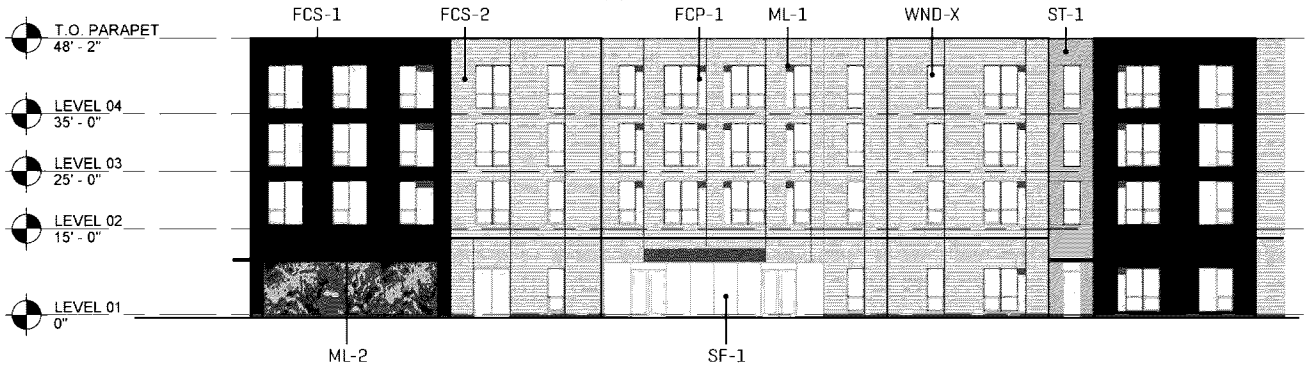

WEST ELEVATION
1" = 20'-0"

*ART SHOWN FOR LOCATION ONLY (NOT ACTUAL DESIGN)

0' 10' 20' 40'

FCP-1
FIBER CEMENT PANEL - SMOOTH - ADOBE

FCP-2
FIBER CEMENT PANEL - SMOOTH - DARK

FCS-1
FIBER CEMENT SIDING - LAP - LIGHT

FCS-2
FIBER CEMENT SIDING - LAP - DARK

ML-1
METAL LOUVER - ADOBE

ML-2
METAL LOUVER - DARK

MF-X
CUSTOM COLOR METAL FLASHING

SF-1
ALUMINUM STOREFRONT AND ENTRANCES

WND-X
VINYL WINDOW

WDX-1
T&G CEDAR SIDING

CONC-1
SMOOTH FINISH CONCRETE

MP-1
CUSTOM COLOR PLATE STEEL CANOPY

ST-1
STUCCO - ADOBE

ST-2
STUCCO - DARK

Approved
City of Portland
Bureau of Development Services
Planner
Date 02-07-2024
* This approval applies only to the reviews requested and is subject to all conditions of approval. Additional zoning requirements may apply.

HOLST

STRONG PROPERTY
4931-4947 N WILLIAMS AVE
PORTLAND, OR 97217

DESIGN REVIEW
01.30.2024

title : BUILDING ELEVATIONS
LU NO. LU 23-103655 DZ Exhibit C.9
sheet : C.12

OPTION 01 - DRYWELLS

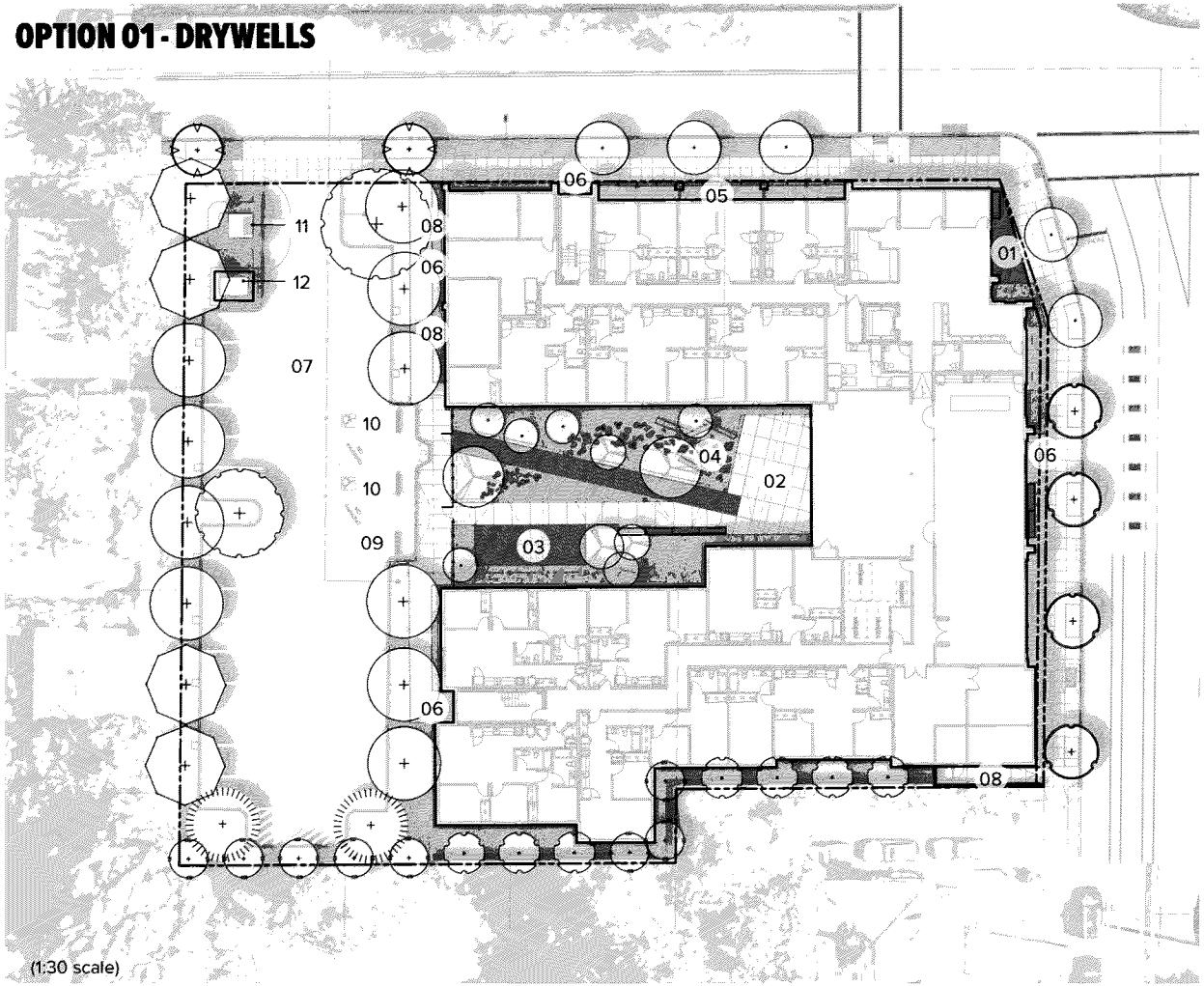

LEGEND

01	Main Entry Plaza
02	Courtyard Terrace (furnishings by owner)
03	Gathering Terrace (furnishings by owner)
04	Nature Play Area
05	Private Patios
06	Building Entry
07	Parking Area
08	Utility Entry
09	Loading Space
10	Accessible Parking
11	Transformer
12	Battery Energy Storage System

Approved
City of Portland
Bureau of Development Services
Planner
Date 02-07-2024
* This approval applies only to the reviews requested and is subject to all conditions of approval. Additional zoning requirements may apply.

HOLST

STRONG PROPERTY
4931-4947 N WILLIAMS AVE
PORTLAND, OR 97217

GROUNDWORKSHOP

DESIGN REVIEW
01.30.2024

title : LANDSCAPE PLAN
LU NO. LU 23-103655 DZ Exhibit C.29
sheet : C.32

City of Portland, Oregon
Bureau of Development Services
Land Use Services
FROM CONCEPT TO CONSTRUCTION

Carmen Rubio, Commissioner
David Kuhnhausen, Interim Director
Phone: (503) 823-7300
TTY: 711
www.portland.gov/bds

Date: 2/9/24

To: Interested Person

From: Staci Monroe, Land Use Services
503-865-6516 / staci.monroe@portlandoregon.gov

NOTICE OF A TYPE II DECISION IN YOUR NEIGHBORHOOD

The Bureau of Development Services has approved a proposal in your neighborhood. The mailed copy of this document is only a summary of the decision. The reasons for the decision and responses to any public comments are included in the version located on the BDS website https://www.portland.gov/bds/zoning-land-use/news/notices. Enter the land use case file number in the keyword search. If you disagree with the decision, you can appeal. Information on how to appeal the decision is included at the end of this decision.

CASE FILE NUMBER: LU 23-103655 DZ

NEW 4-STORY BUILDING

GENERAL INFORMATION

Applicant: Cole Poland | Holst Architecture
123 NE 3rd Ave., Ste 310 | Portland, OR 97232
cpoland@holstarc.com | 503-233-9856

Owner/Agent Kate Piper | City of Portland | Portland Housing Bureau
1900 SW 4th Ave Ste 7007 | Portland, OR 97201

Party of Interest: James Lee | Community Development Partners
126 NE Alberta Street, Suite 202 | Portland, OR 97211

Site Address: 4947 N WILLIAMS AVE

Legal Description: BLOCK 1 LOT 1, WILLIAMS AVE ADD 2; BLOCK 1 LOT 3 S 74.35' OF LOT 20, WILLIAMS AVE ADD 2; BLOCK 1 LOT 18, WILLIAMS AVE ADD 2; BLOCK 1 LOT 19, WILLIAMS AVE ADD 2; BLOCK 1 N 110.65' OF LOT 20, WILLIAMS AVE ADD 2; CANCEL ACCOUNT, WILLIAMS AVE ADD 2; CANCEL ACCOUNT, WILLIAMS AVE ADD 2; BLOCK 1 LOT 2, WILLIAMS AVE ADD 2

Tax Account No.: R916500010, R916500050, R916500450, R916500480, R916500510, R916500451, R916500481, R916500030

State ID No.: 1N1E22AC 00100, 1N1E22AC 00300, 1N1E22AC 01200, 1N1E22AC 01100, 1N1E22AC 00200, 1N1E22AC 00101

Quarter Section: 2530

Neighborhood: Humboldt, contact Peach Anderson at humboldtneighborhood@gmail.com

Business District: Williams Vancouver Bus. Assoc., contact at info@williamsdistrict.com & Soul District Business Association, contact at info@nnebaportland.org

District Coalition: Northeast Coalition of Neighborhoods, contact at info@necoalition.org

Plan District: NONE
Other Designations: NONE
Zoning: CM2 (MU-U)d – Commercial Mixed Use 2 zone with a Design Overlay
Case Type: DZ – Design Review
Procedure: Type II, an administrative decision with appeal to the Design Commission.

Proposal:
The applicant requests Design Review approval for a 4-story building on the property at the southwest corner of the intersection of N Williams and NE Alberta. The building program consists of 75 units of affordable housing including one-bedroom, two-bedroom, and three-bedroom units. Ground floor use consists of a mixture of housing units, building lobby, property management offices, and community amenity spaces. The site consists of a courtyard amenity and 31 surface parking spaces accessed off NE Alberta west of the building. Exterior building materials consist of fiber cement panel and lap siding with accents of cedar siding (tongue and groove), stucco, vinyl windows and aluminum storefront systems. Areas for wall murals are identified on the northwest and southeast corners of the building.

Two approaches to address stormwater are proposed – onsite infiltration via drywells and flow-through planters with discharge to combined sewer. The former requires DEQ approval due to contamination on the site. In the event DEQ does not approve the on-site infiltration an alternative has been designed for the site.

Design Review is required for new development in the Design Overlay Zone that does not utilize the Design Standards in Section 33.420.050.

Relevant Approval Criteria:
In order to be approved, this proposal must comply with the approval criteria of Title 33, Portland Zoning Code, available online at https://www.portland.gov/code/33. The relevant criteria are:

- Portland Citywide Design Guidelines

ANALYSIS

Site and Vicinity: The 41,210 SF site is located at the southwest corner of the N Williams and N Alberta intersection. The site was developed with a single-family home, which has been recently removed, with trees and open area. Single dwelling homes occupy the remainder of this block and similar across N Williams. Newer multi-dwelling and mixed-use development occur to the north and west of the block. N Williams is classified as a Major Transit Priority and Major City Bikeway and Walkway Street. N Alberta is classified as a Transit Access and City Bikeway and Walkway Street.

Zoning: The Commercial/Mixed Use 2 (CM2) zone is a medium-scale zone intended for sites in a variety of centers, along corridors, and in other mixed use areas that have frequent transit service. The zone allows a wide range and mix of commercial and residential uses, as well as employment uses that have limited off-site impacts. Buildings in this zone will generally be up to four stories tall unless height and floor area bonuses are used, or plan district provisions specify other height limits. Development is intended to be pedestrian-oriented, provide a strong relationship between buildings and sidewalks, and complement the scale of surrounding residentially zoned areas.

The Design overlay zone ensures that Portland is both a city designed for people and a city in harmony with nature. The Design overlay zone supports the city's evolution within current and emerging centers of civic life. The overlay promotes design excellence in the built environment through the application of additional design standards and design guidelines that:
- Build on context by enhancing the distinctive physical, natural, historic and cultural qualities of the location while accommodating growth and change;

- Contribute to a public realm that encourages social interaction and fosters inclusivity in people's daily experience; and
- Promotes quality and long-term resilience in the face of changing demographics, climate and economy.

Land Use History: City records indicate there are no prior land use reviews for this site.

Agency Review: A "Notice of Proposal in Your Neighborhood" was mailed **December 6, 2023**. The following Bureaus have responded with no issues or concerns:
- Bureau of Environmental Services (see Exhibits E1 and E6)
  - BES has reviewed and supports both approaches to address stormwater – onsite infiltration via drywells, which requires DEQ approval, and flow-through planters with discharge to combined sewer.
- Portland Bureau of Transportation (see Exhibit E2)
- Life Safety Review Section of BDS (see Exhibit E3)
- Fire Bureau (see Exhibit E4)
- Bureau of Parks, Forestry Division (see Exhibits E5 and E7)
  - This property is currently in public ownership with the intent to transfer to a private organization in the near future, Urban Forestry has reviewed the project against Title 11 requirements that apply to properties in public and private ownership and has no objections for either scenario.
- Water Bureau
- Site Development Section of BDS

Neighborhood Review: A Notice of Proposal in Your Neighborhood was mailed on December 6, 2023. No written responses have been received from either the Neighborhood Association or notified property owners in response to the proposal.

Procedural Summary:
- The project took advantage of two early assistance opportunities with BDS:
  - Early Assistance meeting with Design Review and Interagency Partners Staff on 5/16/23 (file number EA 23-033320).
  - Design Advice Request with the Design Commission on 7/20/23 (file number EA 23-052200 DA).
- Design Review application was submittal on 11/16/23 and deemed complete on 11/30/23.
- The applicant submitted two extensions for an additional 27 days on 1/10/24 and 1/30/24 in order to address issues related to BES and Urban Forestry as well as revise some project elements requested by the development team.

ZONING CODE APPROVAL CRITERIA

Chapter 33.825 Design Review
Section 33.825.010 Purpose of Design Review
Design review implements the Design overlay zone, strengthening these areas as places designed for people. Design review supports development that builds on context, contributes to the public realm, and provides high quality and resilient buildings and public spaces.

Section 33.825.055 Design Review Approval Criteria
A design review application will be approved if the review body finds the applicant to have shown that the proposal complies with the design guidelines for the area.

> **Findings:** The site is designated with design overlay zoning (d), therefore the proposal requires Design Review approval. Because of the site's location, the applicable design guidelines are the Portland Citywide Design Guidelines.

Portland Citywide Design Guidelines
The Portland Citywide Design Guidelines consist of a set of guidelines for design cases in community planning areas outside of the Central City. The Portland Community Design

Guidelines focus on three tenets: **Context,** balancing the aspirations of the future desired character with today's setting; **Public Realm**, strengthening a building and site's relationship with the public rights-of-way and open spaces; and **Quality And Resilience,** underscoring holistic site and building designs that benefit people and climate.

Staff has considered all guidelines and has addressed only those guidelines considered applicable to this project.

01: Build on the character, local identity, and aspiration of the place.
Possible design approaches may include, but are not limited to:
- Community - Relating to the local community's identity, history, and cultural values and places.
- Architecture - Taking cues from desired character of existing architecture.
- Nature - Reflecting and enhancing local natural resources such as rivers, streams, buttes and vegetation.

Findings: The project acknowledges its prominent location within the Albina neighborhood on the intersection of N. Alberta and N. Williams. The intentional utilization of a setback entry at the intersection creates a harmonious transition from the street, fostering a sense of welcoming and an area to pause at covered seating. The incorporation of art walls along both N. Alberta and N. Williams provides an opportunity to contribute to and reflect the community's rich and diverse culture. The central courtyard reintroduces native plantings to the site encouraging exploration. *These guidelines are therefore met.*

02: Create Positive Relationship with surroundings.
Possible design approaches may include, but are not limited to:
- Building Massing - Developing effective placement and proportion of building massing toward adjacent lower-scale development and residential uses.
- Street Wall - Maintaining a vibrant street wall with continuous storefronts along historic main streets.
- Connectivity - Creating visual and physical links to adjacent pedestrian pathways and neighboring open spaces.
- Adjacent Historic Landmarks - Deferring to the neighboring historic landmark through massing and urban form.

Findings: The projects stepped massing along N. Williams builds a relationship with the single-family structures across the street. By aligning the massing to the neighboring buildings, the design pays homage to their scale and proportions while generating a sense of visual harmony and interconnectedness, while the massing along N. Alberta holds firm to the property line in one larger form. By employing setbacks at the ground floor level, the design reflects the surrounding context, creating a breathing space along the right-of-way. Furthermore, the placement of the community room in alignment with the central courtyard establishes a compelling visual connection to the pedestrian experience. *These guidelines are therefore met.*

03: Integrate and enhance on-site features and opportunities to contribute to a location's uniqueness.
Possible design approaches may include, but are not limited to:
- Natural Resources - Minimizing site disturbance and integrating topography and natural resources found on-site.
- Viewpoints - Integrating views to community points of interest.
- On-site Older Buildings and Historic Resources - Retaining existing older buildings and historic resources.
- Social and Cultural Significance - Incorporating a site's significant cultural or social history.

Findings: The sites jogged south property line played a pivotal role in shaping the project's spatial dynamics, capitalizing on the natural features to create a distinctive

building footprint. The unique site boundary allowed the building's south 'bar' to jog creating a more diverse open space in the center of the site. The building's deliberate orientation of the east-west courtyard paired with the jogged south bar optimizes the amount of natural light being provided to the space. The courtyard becomes the focal point for residents and pedestrians alike, fostering a sense of connection with the community through carefully curated sightlines that encourage engagement and interaction. *These guidelines are therefore met.*

04: Design the sidewalk level of buildings to be active and human-scaled.
Possible design approaches may include, but are not limited to:
- Ground Floor Heights - Designing buildings with taller, more adaptable ground floors.
- Multiple Entries and Windows - Offering more than one entrance along the ground floors of buildings to provide "eyes on the street" and avoid blank expanses of walls.
- Weather Protection - Providing protection from wind, rain, and sun.
- Lighting - Enhancing safety and visibility for pedestrians and highlighting special building features.
- Residential Setbacks - Creating soft transitions while separating private spaces from public spaces.

Findings: The design incorporates a combination of elements that promote a lively pedestrian experience. Canopies are integrated along both N. Williams and N. Alberta facades. The inclusion of strategically placed seating zones encourages social interaction and provides opportunities for people to pause and engage. These zones are located outside the main building entry and secondary entrance from the right-of-way to the large community room. The design emphasizes a connection between the sidewalk and interior, with large expanses of storefront between the most active building programs. The deliberate placement of art on three blank walls on the north, east and west elevations enriches the streetscape. Units along N. Alberta include private patios for the residents buffered by landscape planters that enhance the experience by softening the transition from public to private space. Altogether, these design elements create an inviting, active, and human-centric experience that encourages social interaction, fosters a sense of community, and enhances the overall urban experience for pedestrians and residents.

A condition of approval has been added for the three art murals in the locations and sizes identified on Exhibits C5 and C6 to be approved through the City's Original Art Mural Program before the issuance of the Certificate of Occupancy for the building.

As conditioned, these guidelines are therefore met.

05: Provide opportunities to pause, sit, and interact.
Possible design approaches may include, but are not limited to:
- Seating - Providing a variety of seating types for passersby and building users.
- Integrate Bicycles - Designing open spaces that accommodate parking for bicycles.
- Art/Water - Designing spaces that can integrate opportunities for art, stormwater or water features.
- Enclosure - Offering a comfortable buffer and distinction from the public realm.
- Trees and Landscaping - Promoting health and wellness by helping to mitigate the effects of urban heat island.

Findings: The deliberate incorporation of spaces for sitting, resting, and socializing within the design underscores an intentional effort to foster community-building and social interaction. The setback main entry is complimented with covered seating and vegetation, providing a welcoming transition from a busy street corner. Additional covered seating and bike parking is integrated into the building setbacks along N. Williams outside the large community room, where gatherings can continue into the public realm. The incorporation of art feature walls within the community room and adjacent to it on the exterior adds a depth of character to the environment, acting as a catalyst for further interaction. The courtyard serves as a continuation of the community space, blending indoors with outdoors. The landscaping incorporates

elements of nature play, with a variety of seating areas for large and small gatherings, promoting health, wellness, and socialization. *These guidelines are therefore met.*

06: Integrate and minimize the impact of parking and building services.
Possible design approaches may include, but are not limited to:
- Vehicles and Parking - Screening and buffering vehicle areas from pedestrians and integrating parking into the building design.
- Utilities, Trash and Recycling - Siting and screening utilities, trash, and recycling enclosures away from public realm.
- Vaults - Integrating and concealing vaults within open areas.
- Stormwater Planters - Integrating stormwater with multiple uses, such as buffering, placemaking, and seating opportunities.
- Long-Term Bicycle Parking - Designing bicycle parking to encourage use by adding bike lobbies and bike repair amenities.

Findings: The on-grade parking lot has been designed to minimize its impact while integrating into the surroundings. The utilities, transformer and PV array backup battery are integrated with the perimeter and interior landscape planters. The battery backup has an additional layer of screening with a "good neighbor" fence provided around it. The parking lot's thoughtful placement in proximity to the courtyard allows for a seamless connection between different areas of activity. The courtyard and multiple layers of landscaping foster a sense of continuity between the parking area and communal spaces. The landscape buffer not only screens the parking lot, but also serves as a transitional element, guiding individuals from the parking area to the vibrant social hub of the courtyard.

To ensure the above-grade utility transformer is adequately screened along the sidewalk and property to the west, a condition of approval has been added to include evergreen shrubs that grow to the height of the transformer and placed along its north and west sides and lower landscaping between the taller shrubs and sidewalk and west property line to provide a layer effect to soften the impact of the utility object.

As conditioned, these guidelines are therefore met.

07: Support the comfort, safety, and dignity of residents, workers, and visitors through thoughtful site and building design.
Possible design approaches may include, but are not limited to:
- Internal Open Spaces - Offering a variety of multi-functional spaces such as balconies, stoops, plazas, play areas, and passive sitting areas.
- Internal Connections - Creating safe and visible pedestrian circulation through sites.
- Vehicles Areas - Ensuring that vehicle areas do not impair the usability and enjoyment of the site.
- Solar Access - Providing solar access to open areas.
- Windows and Entries - Orienting windows and entries toward on-site circulation and open areas.

Findings: The project thoughtfully integrates site and building elements to create a harmonious and functional environment. Entries are setback from the sidewalk, providing seating areas, gathering spots, and areas to pause. The central courtyard space fosters a sense of community and connection with multiple pathways, seating areas, gathering spots, nature play zones, and lighting with its generous width and western orientation. Windows around the project strike a balance between visibility and privacy. Ground floor units have native landscaping directly outside. This careful consideration of sightlines contributes to a sense of openness and connectivity, enhancing the interaction between indoor and outdoor spaces. *These guidelines are therefore met.*

08: Design for quality, using enduring materials and strategies with a coherent approach.
Possible design approaches may include, but are not limited to:

- Unity - Expressing a clear and coherent design approach to unify building.
- Articulation - Highlighting function, hierarchy, or spaces through small breaks in form.
- Application of Exterior Materials - Expressing the building design with hierarchy, shifts or repetition.
- Quality of Materials - Providing quality, resilience, and durability in construction and execution of details.
- Building Openings - Offering permeability, depth, and texture.

Findings: Quality design throughout the project is evident through a hierarchy that emphasizes the functions withing the building. Building entries stand out as focal points, marked by an abundance of glazing that not only invites natural light into the interiors but also offers a visual invitation to the passerby. These entries are adorned with covered seating, creating welcoming spaces that encourage gathering and interaction. Openings in the building skin are inset, serving as visual relief across the façade. Additionally, the integration of venting next to windows ensures a seamless visual appearance. Rooftop mechanical equipment is stepped back from view, preserving the aesthetic integrity of the project. Fiber cement is carefully utilized exclusively at residential areas and of a thickness (5/8") and detail to ensure a long-term quality finish. Materials in "touch zones" consist of 3-coat stucco and stained cedar, adding warmth and tactility around the base. Aluminum storefront and vinyl windows provide durable systems within the building openings. Finally, the site elements within building recesses and the courtyard are comprised of durable and compatible materials that offer texture and interest. *These guidelines are therefore met.*

09: Design for resilience, health, and stewardship of the environment, ensuring adaptability to climate change and the evolving needs of the city.
Possible design approaches may include, but are not limited to:

- Adaptable Buildings - Providing flexibility in building programming, floor heights, and building openings.
- Resource Conservation - Prioritizing the use of existing structures or reclaimed and recycled materials.
- Native Landscaping - Integrating native landscaping and large canopy trees to address heat island and provide for pollinators.
- Ecoroofs - Providing and integrating ecoroofs for pollinators and people.
- Bird-Safe - Reducing bird strikes through careful design.
- Daylight and Air - Providing daylight and ventilation and improving indoor air quality.
- On-Site Stormwater - Allowing rain to soak into the ground and filter through lush vegetation and landscaping.

Findings: The project is committed to design for resilience, health, and stewardship of the environment. The inclusion of native plantings around the site not only enhances the visual appeal but also fosters biodiversity and reduces water consumption by utilizing plants adapted to the local climate. Shade trees strategically positioned throughout the parking lot serve as a natural cooling mechanism, mitigating the urban heat island effect. Moreover, the integration of rooftop solar panels coupled with battery backup systems exemplifies the approach to renewable energy and resilience. Additionally, the design prioritizes the health and well-being of the occupants. Natural light is maximized throughout the building, creating bright and inviting interiors. The inclusion of energy recovery ventilators at each unit and public space ensures a continuous supply of fresh air throughout the building. Overall, these design elements reflect a holistic approach to sustainability, resilience, and occupant well-being. *These guidelines are therefore met.*

DEVELOPMENT STANDARDS

Unless specifically required in the approval criteria listed above, this proposal does not have to meet the development standards in order to be approved during this review process. The plans submitted for a building or zoning permit must demonstrate that all development standards of

Title 33 can be met or have received an Adjustment or Modification via a land use review prior to the approval of a building or zoning permit.

CONCLUSIONS

The design review process implements the Design overlay zone, strengthening these areas as places designed for people. Design review supports development that builds on context, contributes to the public realm, and provides high quality and resilient buildings and public spaces. The proposal meets the applicable design guidelines and therefore warrants approval**.**

ADMINISTRATIVE DECISION

Approval of a new 4-story residential building and associated site improvements per the approved site plans, Exhibits C-1 through C-59, signed and dated 2/7/24, subject to the following conditions:

A. A finalized building permit must be obtained to document the approved project. As part of the application submittal, the following development-related conditions (B through E) must be noted on each of the site plans or included as a separate sheet. The sheet on which this information appears must be labeled "ZONING COMPLIANCE PAGE - Case File LU 23-103655 DZ." All requirements must be graphically represented on the site plan, landscape, or other required plan and must be labeled "REQUIRED."

B. At the time of permit submittal, a signed Certificate of Compliance form (https://www.portland.gov/bds/documents/certificate-compliance-design-and-historic-resource-review-approvals) must be submitted to ensure the permit plans comply with the Design/Historic Resource Review decision and approved exhibits.

C. The three art murals in the locations and sizes identified on Exhibits C5 and C6 must be approved through the City's Original Art Mural Program before the issuance of the Certificate of Occupancy for the building.

D. Evergreen shrubs that grow to the height of the transformer must be placed along its north and west sides and lower landscaping between the taller shrubs and sidewalk and west property line to provide a layer effect to soften the impact of the utility object.

E. No field changes allowed.

Staff Planner: Staci Monroe

Decision rendered by: 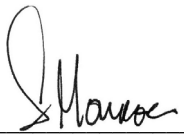 **on 2/7/24**

By authority of the Director of the Bureau of Development Services

Decision mailed: 2/9/24

PROCEDURAL INFORMATION

The application for this land use review was submitted on November 16, 2023, and was determined to be complete on November 30, 2023.

Zoning Code Section 33.700.080 states that land use review applications are reviewed under the regulations in effect at the time the application was submitted, provided that the application is complete at the time of submittal, or complete within 180 days. Therefore, this application was reviewed against the Zoning Code in effect on November 16, 2023.

ORS 227.178 states the City must issue a final decision on land use review applications within 120 days of the application being deemed complete. The 120-day review period may be

waived or extended at the request of the applicant. In this case, the applicant requested that the 120-day review period be extended 62 days (Exhibits A4 & A5). Unless further extended by the applicant, **the 120 days will expire on 5/30/24.**

Some of the information contained in this report was provided by the applicant. As required by Zoning Code Section 33.800.060, the burden of proof is on the applicant to show that the approval criteria are met. The Bureau of Development Services has independently reviewed the information submitted by the applicant and has included this information only where the Bureau of Development Services has determined the information satisfactorily demonstrates compliance with the applicable approval criteria. This report is the decision of the Bureau of Development Services with input from other City and public agencies.

Conditions of Approval. If approved, this project may be subject to a number of specific conditions, listed above. Compliance with the applicable conditions of approval must be documented in all related permit applications. Plans and drawings submitted during the permitting process must illustrate how applicable conditions of approval are met. Any project elements that are specifically required by conditions of approval must be shown on the plans and labeled as such.

These conditions of approval run with the land, unless modified by future land use reviews. As used in the conditions, the term "applicant" includes the applicant for this land use review, any person undertaking development pursuant to this land use review, the proprietor of the use or development approved by this land use review, and the current owner and future owners of the property subject to this land use review.

Appealing this decision. This decision may be appealed to the Design Commission, and if appealed a hearing will be held. Information on filing the appeal and the appeal form are available from the Bureau of Development Services website: https://www.portland.gov/bds/zoning-land-use/land-use-review-fees-and-types/appeals-fees-and-fee-waivers. Appeals must be received **by 4:30 PM on 2/23/24. The completed appeal application form must be emailed to LandUseIntake@portlandoregon.gov and to the planner listed on the first page of this decision.** If you do not have access to email, please telephone the planner listed on the front page of this notice about submitting the appeal application. **An appeal fee of $250 will be charged**. Once the completed appeal form is received, Bureau of Development Services staff will contact you regarding paying the appeal fee. The appeal fee will be refunded if the appellant prevails. There is no fee for Office of Community and Civic Life recognized organizations for the appeal of Type II and IIx decisions on property within the organization's boundaries. The vote to appeal must be in accordance with the organization's bylaws. Please contact the planner listed on the front page of this decision for assistance in filing the appeal and information on fee waivers. Please see the appeal form for additional information.

If you are interested in viewing information in this file, please contact the planner listed on the front of this notice. The planner can email you documents from the file. A fee would be required for all requests for paper copies of file documents. Additional information about the City of Portland, and city bureaus is available online at https://www.portland.gov. A digital copy of the Portland Zoning Code is available online at https://www.portlandoregon.gov/zoningcode.

Attending the hearing. If this decision is appealed, a hearing will be scheduled, and you will be notified of the date and time of the hearing. The decision of the Design Commission on an appeal would be the final decision of the City. Any further appeal must be made to the Oregon Land Use Board of Appeals (LUBA) within 21 days of the date of mailing the decision, pursuant to ORS 197.620 and 197.830. Contact LUBA at 775 Summer St NE, Suite 330, Salem, Oregon 97301-1283, or phone 1-503-373-1265 for further information.

Failure to raise an issue by the close of the record at or following the final hearing on this case, in person or by letter, may preclude an appeal to the Land Use Board of Appeals (LUBA) on

that issue. Also, if you do not raise an issue with enough specificity to give the Design Commission an opportunity to respond to it, that also may preclude an appeal to LUBA on that issue.

Recording the final decision.
If this land use review is approved the final decision will be recorded with the County Recorder. *Unless appealed,* the final decision will be recorded **on or after February 26, 2024,** by the Bureau of Development Services.

Expiration of this approval. Generally, land use approvals (except Comprehensive Plan and Zoning Map Amendments) expire three years from the date of the final decision unless one of the actions below has occurred (see Zoning Code Section 33.730.130 for specific expiration rules):
- A City permit has been issued for the approved development,
- The approved activity has begun (for situations not requiring a permit), or
- In situations involving only the creation of lots, the final plat has been submitted.

Where a site has received approval for multiple developments, and a building permit is not issued for all of the approved development within three years of the date of the final decision, a new land use review will be required before a permit will be issued for the remaining development, subject to the Zoning Code in effect at that time.

Applying for permits. This land use decision is **not a permit** for development. A building permit or development permit may be required before carrying out an approved project. See https://www.portland.gov/bds/permit-review-process/apply-or-pay-permits. At the time they apply for a permit, permittees must demonstrate compliance with:
- All conditions imposed herein;
- All applicable development standards, unless specifically exempted as part of this land use review;
- All requirements of the building code; and
- All provisions of the Municipal Code of the City of Portland, and all other applicable ordinances, provisions and regulations of the City.

EXHIBITS (not attached unless indicated)

A. Applicant's Statement
   1. Project narrative and approval criteria responses
   2. Neighborhood contact requirement information
   3. GATR/PHB funded project letter
   4. 120-day timeline extension
   5. 120-day timeline extension
   6. Original drawing set
   7. Original stormwater report dated 11/13/23
   8. Revised stormwater report dated 1/23/24
   9. Appendix – renderings, context, background
B. Zoning Map (attached)
C. Plans/Drawings:
   1. Site Plan (attached)
   2. Level 01 floor plan
   3. Level 02-04 floor plan (attached)
   4. Roof plan (attached)
   5. North & East Elevations
   6. South & West Elevations
   7. Courtyard Elevations
   8. Colored North & East Elevations (attached)
   9. Colored South & West Elevations (attached)
   10. Colored Courtyard Elevations

11. Building Sections
12. Building Sections
13. Enlarged elevations, sections & plans
14. Enlarged elevations, sections & plans
15. Enlarged elevations, sections & plans
16. Enlarged elevations, sections & plans
17. Enlarged elevations, sections & plans
18. Enlarged section details
19. Enlarged section details
20. Enlarged section details
21. Enlarged section details
22. Enlarged section details
23. Enlarged section details
24. Enlarged section details
25. Enlarged section details
26. Enlarged section details
27. Enlarged section details
28. Enlarged section details
29. Landscape plan Option 01-Drywells (attached)
30. Landscape plan Option 02-Flow Through Planters
31. Landscape details
32. Tree removal and retention plan
33. Landscape plan details and calculations
34. Landscape plan details and calculations Option 01-Drywells
35. Landscape plan details and calculations Option 02-Flow Through Planters
36. Landscape plan details Option 01-Drywells
37. Landscape plan details Option 02-Flow Through Planters
38. Landscape species
39. Landscape species
40. Landscape species
41. Landscape species
42. Landscape species
43. Landscape species
44. Landscape species
45. Landscape species
46. Site Features plan Option 01-Drywells
47. Site Features plan Option 02-Flow Through Planters
48. Site feature details
49. Site feature details
50. Private Patio section
51. Utility Plan Option 01-Drywells
52. Utility Plan Option 02-Flow Through Planters
53. Lighting Plan
54. Lighting cutsheets
55. Materials details
56. Cutsheets
57. Cutsheets
58. Cutsheets
59. Cutsheets

D. Notification information:
   1. Mailing list
   2. Mailed notice
E. Agency Responses:
   1. Bureau of Environmental Services
   2. Portland Bureau of Transportation
   3. Life Safety Review Section of BDS
   4. Fire Bureau
   5. Bureau of Parks, Forestry Division

6. Bureau of Environmental Services - Addendum
7. Bureau of Parks, Forestry Division - Addendum

F. Correspondence: None
G. Other:
1. Original LU Application

The Bureau of Development Services is committed to providing equal access to information and hearings. Please notify us no less than five business days prior to the event if you need special accommodations. Call 503-823-7300 (TTY 503-823-6868).

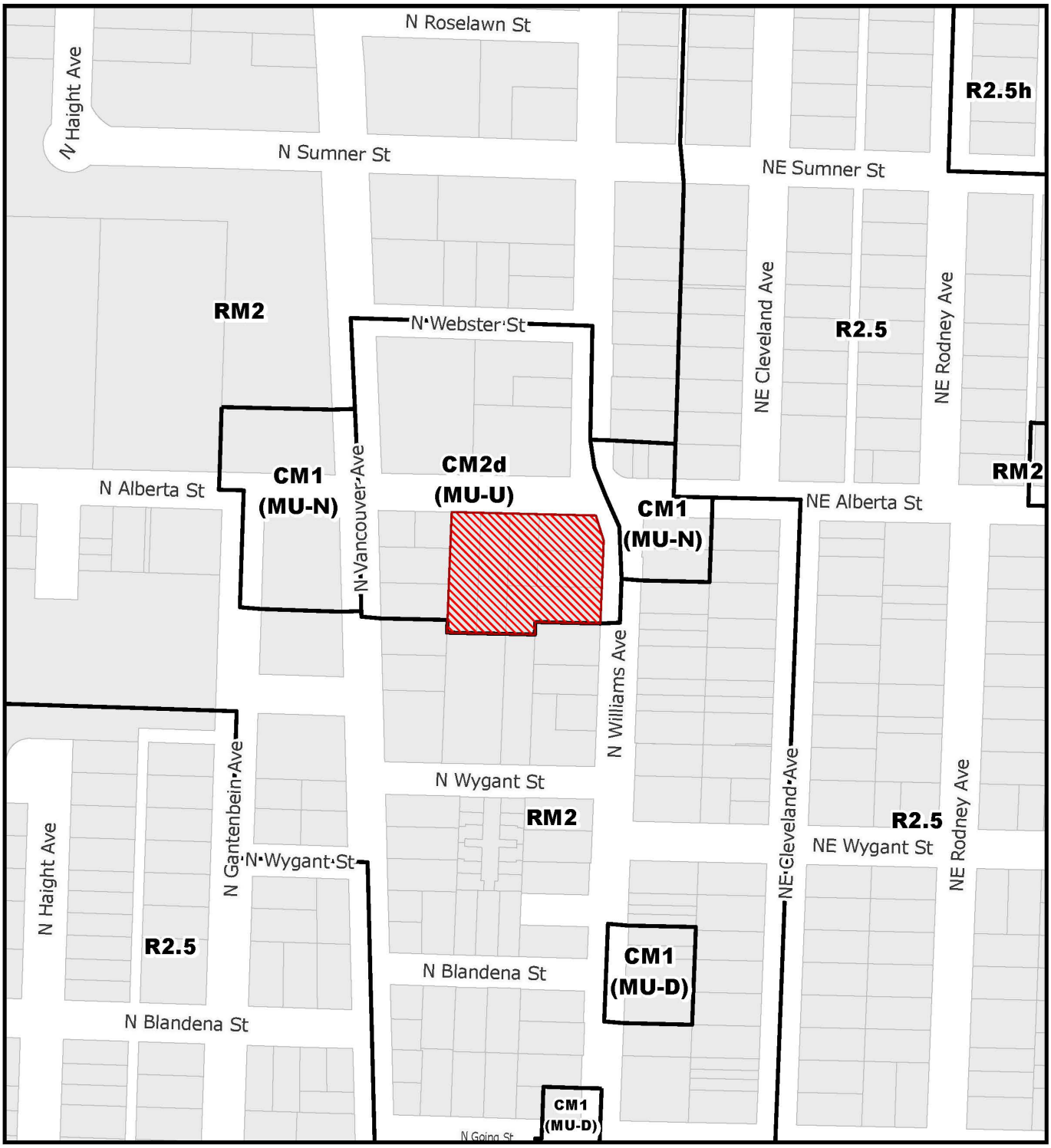

For Zoning Code in Effect Post October 1, 2022

ZONING

Site

File No. LU 23 - 103655 DZ
1/4 Section 2530
Scale 1 inch =200 feet
State ID 1N1E22AC 100
Exhibit B Nov 16, 2023

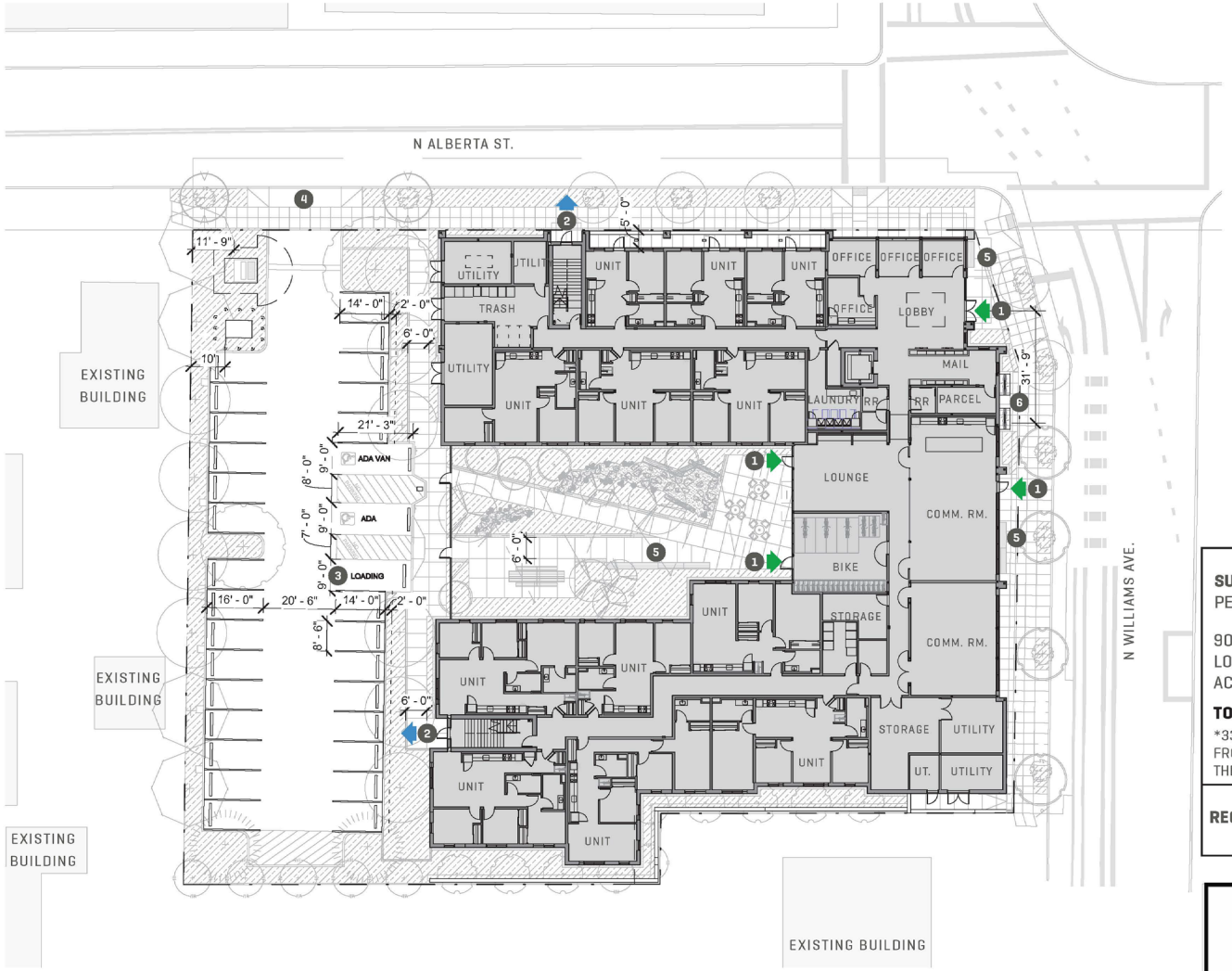

SCALE: 1" = 30' - 0"

0' 15' 30' 60'

N

48' - 2", 4 STORY TYPE 5A CONSTRUCTION

SITE AREA: 41,210 SF

BUILDING FOOTPRINT: 20,920 SF

- PROJECT PROPERTY LINE
1. BUILDING ENTRY
2. EXIT
3. LOADING
4. NEW CURB CUT, REF CIVIL
5. BENCH
6. SHORT-TERM BIKE PARKING (4)

SURFACE PARKING LOT MINIMUM PARKING SPACE DIMENSIONS
PER TABLE 266-4

	PROVIDED
90 DEGREE: 8'-6" WIDTH X 16'-0" DEPTH*	28
LOADING TYPE B: 9'-0" WIDTH X 19'-0" DEPTH	1
ACCESSIBLE: 9'-0" WIDTH X 20'-0" DEPTH	2
TOTAL PROVIDED	**31**

*33.266.130.F.4.a UP TO 2 FEET OF THE FRONT OF THE SPACE AS MEASURED FROM A LINE PARALLEL TO THE DIRECTION OF THE BUMPER OF A VEHICLE USING THE SPACE MAY BE LANDSCAPED AREA.

REQUIRED SHORT-TERM BIKE PARKING: 1 PER 20 UNITS 75 / 20 = 4
PROVIDED: 4

Approved
City of Portland
Bureau of Development Services

Planner _____

Date 02-07-2024

* This approval applies only to the reviews requested and is subject to all conditions of approval. Additional zoning requirements may apply.

HOLST

© 2023 HOLST ARCHITECTURE INC.

STRONG PROPERTY
4931-4947 N WILLIAMS AVE
PORTLAND, OR 97217

DESIGN REVIEW
01.30.2024

title : SITE PLAN

LU NO.

sheet : C.4

LU 23-103655 DZ Exhibit C.1

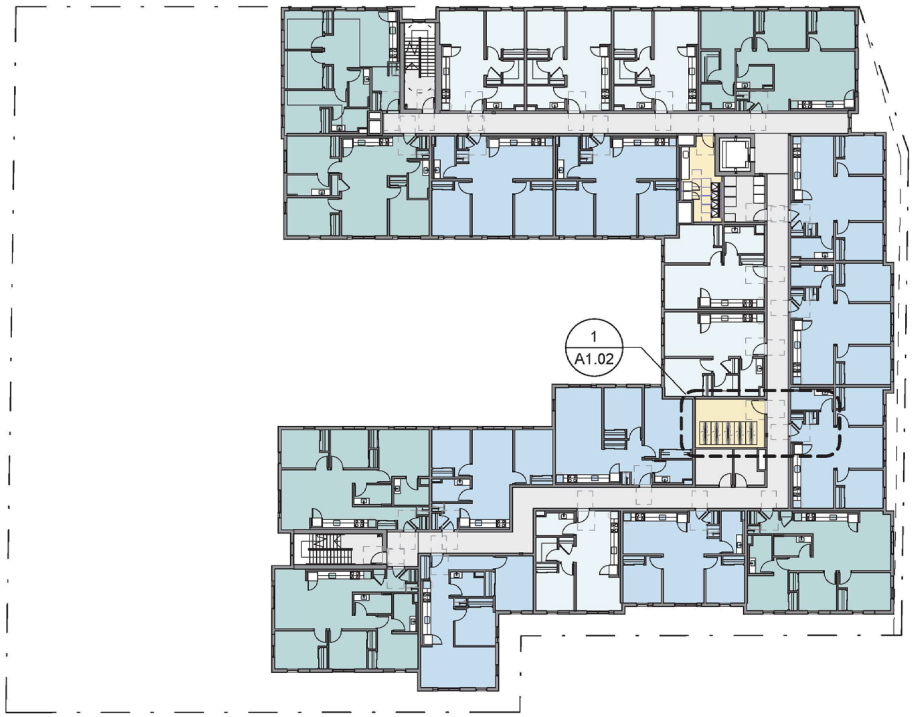

LEGEND

- 1-BEDROOM
- 2-BEDROOM
- 3-BEDROOM
- AMENITY SPACES
- OFFICE
- MECH / B.O.H. / CIRC.

SCALE: 1" = 30' - 0"

0' 15' 30' 60'

N

Approved
City of Portland
Bureau of Development Services

Planner _____

Date 02-07-2024

* This approval applies only to the reviews requested and is subject to all conditions of approval. Additional zoning requirements may apply.

HOLST

© 2023 HOLST ARCHITECTURE INC.

STRONG PROPERTY
4931-4947 N WILLIAMS AVE
PORTLAND, OR 97217

DESIGN REVIEW
01.30.2024

title : LEVEL 01 FLOOR PLAN

LU NO. LU 23-103655 DZ Exhibit C.3

sheet : C.6

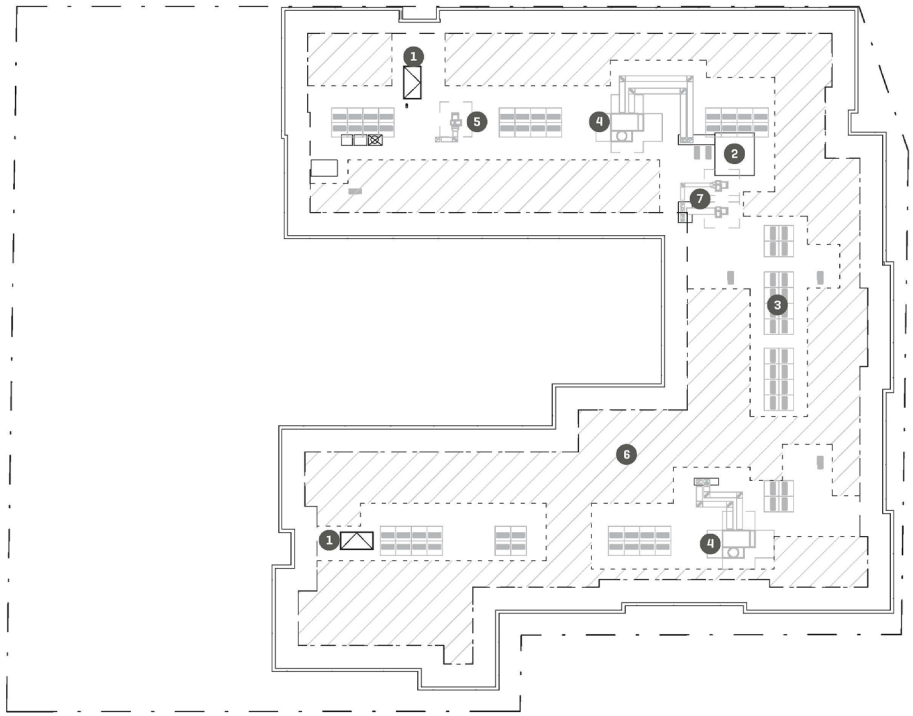

1. ROOF ACCESS HATCH
2. ELEVATOR OVERRUN
3. HEAT PUMP CONDENSING UNITS
4. DEDICATED OUTDOOR AIR SYSTEM
5. EXHAUST FAN
6. AREA FOR FUTURE PV PANELS (HATCHED)
7. LAUNDRY MAKE-UP AIR

SCALE: 1" = 30' - 0"

0' 15' 30' 60'

N

Approved
City of Portland
Bureau of Development Services

Planner _____

Date 02-07-2024

* This approval applies only to the reviews requested and is subject to all conditions of approval. Additional zoning requirements may apply.

HOLST

© 2023 HOLST ARCHITECTURE INC.

STRONG PROPERTY
4931-4947 N WILLIAMS AVE
PORTLAND, OR 97217

DESIGN REVIEW
01.30.2024

title : ROOF PLAN

LU NO. LU 23-103655 DZ Exhibit C.4

sheet : C.7

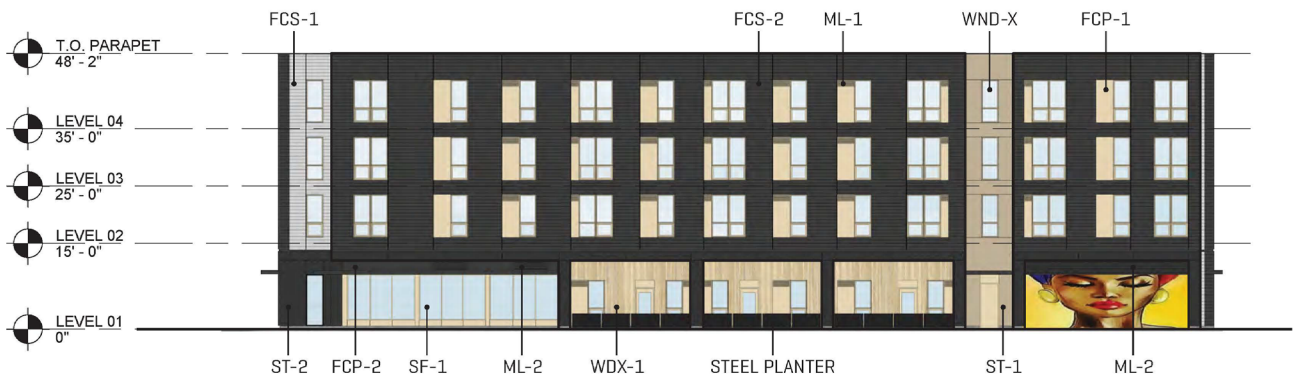

NORTH ELEVATION
1" = 20'-0"

*ART SHOWN FOR LOCATION ONLY (NOT ACTUAL DESIGN)

EAST ELEVATION
1" = 20'-0"

*ART SHOWN FOR LOCATION ONLY (NOT ACTUAL DESIGN)

FCP-1
FIBER CEMENT PANEL - SMOOTH - ADOBE

FCP-2
FIBER CEMENT PANEL - SMOOTH - DARK

FCS-1
FIBER CEMENT SIDING - LAP - LIGHT

FCS-2
FIBER CEMENT SIDING - LAP - DARK

ML-1
METAL LOUVER - ADOBE

ML-2
METAL LOUVER - DARK

MF-X
CUSTOM COLOR METAL FLASHING

SF-1
ALUMINUM STOREFRONT AND ENTRANCES

WND-X
VINYL WINDOW

WDX-1
T&G CEDAR SIDING

CONC-1
SMOOTH FINISH CONCRETE

MP-1
CUSTOM COLOR PLATE STEEL CANOPY

ST-1
STUCCO - ADOBE

ST-2
STUCCO - DARK

Approved
City of Portland
Bureau of Development Services

Planner _____

Date 02-07-2024

* This approval applies only to the reviews requested and is subject to all conditions of approval. Additional zoning requirements may apply.

HOLST

© 2023 HOLST ARCHITECTURE INC.

STRONG PROPERTY
4931-4947 N WILLIAMS AVE
PORTLAND, OR 97217

DESIGN REVIEW
01.30.2024

title : BUILDING ELEVATIONS

LU NO. LU 23-103655 DZ Exhibit C.8

sheet : C.11

SOUTH ELEVATION
1" = 20'-0"

*ART SHOWN FOR LOCATION ONLY (NOT ACTUAL DESIGN)

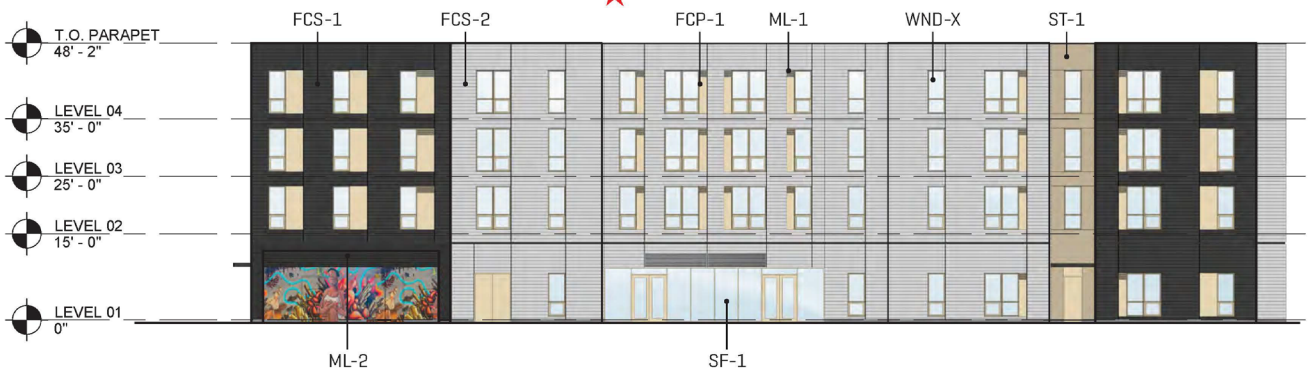

WEST ELEVATION
1" = 20'-0"

*ART SHOWN FOR LOCATION ONLY (NOT ACTUAL DESIGN)

FCP-1
FIBER CEMENT PANEL - SMOOTH - ADOBE

FCP-2
FIBER CEMENT PANEL - SMOOTH - DARK

FCS-1
FIBER CEMENT SIDING - LAP - LIGHT

FCS-2
FIBER CEMENT SIDING - LAP - DARK

ML-1
METAL LOUVER - ADOBE

ML-2
METAL LOUVER - DARK

MF-X
CUSTOM COLOR METAL FLASHING

SF-1
ALUMINUM STOREFRONT AND ENTRANCES

WND-X
VINYL WINDOW

WDX-1
T&G CEDAR SIDING

CONC-1
SMOOTH FINISH CONCRETE

MP-1
CUSTOM COLOR PLATE STEEL CANOPY

ST-1
STUCCO - ADOBE

ST-2
STUCCO - DARK

Approved
City of Portland
Bureau of Development Services
Planner
Date 02-07-2024
* This approval applies only to the reviews requested and is subject to all conditions of approval. Additional zoning requirements may apply.

HOLST
© 2023 HOLST ARCHITECTURE INC.

STRONG PROPERTY
4931-4947 N WILLIAMS AVE
PORTLAND, OR 97217

DESIGN REVIEW
01.30.2024

title : BUILDING ELEVATIONS
LU NO. LU 23-103655 DZ Exhibit C.9
sheet : C.12

OPTION 01 - DRYWELLS

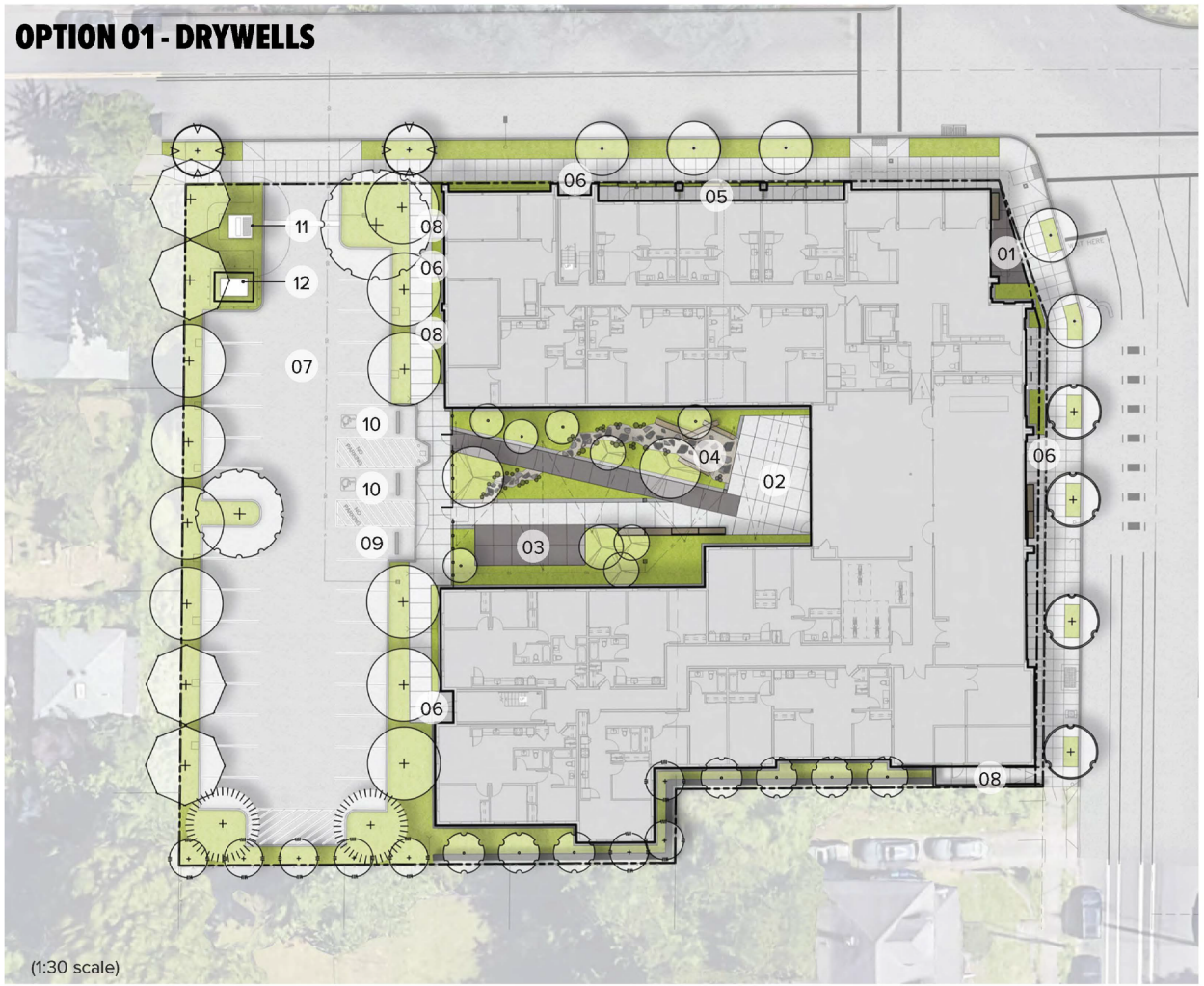

LEGEND

01	Main Entry Plaza
02	Couryard Terrace (furnishings by owner)
03	Gathering Terrace (furnishings by owner)
04	Nature Play Area
05	Private Patios
06	Building Entry
07	Parking Area
08	Utility Entry
09	Loading Space
10	Accessible Parking
11	Transformer
12	Battery Energy Storage System

Approved
City of Portland
Bureau of Development Services
Planner
Date 02-07-2024
* This approval applies only to the reviews requested and is subject to all conditions of approval. Additional zoning requirements may apply.

	A	B	C	D	E	F
1	ENDORSEMENT	INFO1	INFO2	NAME	ADDRESS/IO ADDRESS	CITYSTATEZIP/ADDRESSEE
2	RETURN SERVICE REQUESTED		1N1E22AA 17000	GATES CATON	5005 NE CLEVELAND AVE	PORTLAND OR 97211
3	RETURN SERVICE REQUESTED		1N1E22AA 17100	HAYASHI REIKA & JENNINGS PATRICK	3524 NW THURMAN ST	PORTLAND OR 97210
4	RETURN SERVICE REQUESTED		1N1E22AA 17102	5000 WILLIAMS LLC	43 BECKET ST	LAKE OSWEGO OR 97035
5	RETURN SERVICE REQUESTED		1N1E22AA 17104	CRAIG CAROLE J & CRAIG PAMELA J	21 NE ALBERTA ST	PORTLAND OR 97211
6	RETURN SERVICE REQUESTED	1N1E22AB 10200	OREGON STATE OF	DEPT OF ADMIN SERVICES	1225 FERRY ST	SALEM OR 97310
7	RETURN SERVICE REQUESTED		1N1E22AB 10200	VOLUNTEERS OF AMERICA	3910 SE STARK ST	PORTLAND OR 97214-2278
8	RETURN SERVICE REQUESTED		1N1E22AB 9900	OREGON STATE DEPT OF HUMAN SERVICES	30 N WEBSTER ST	PORTLAND OR 97217
9	RETURN SERVICE REQUESTED		1N1E22AB 9900	ALBINA HUMAN RESOURCES CENTER	30 N WEBSTER ST	PORTLAND OR 97217
10	RETURN SERVICE REQUESTED		1N1E22AB 9900	EASTER SEALS OREGON ATTN CFO	7300 SW HUNZIKER ST #103	PORTLAND OR 97223
11	RETURN SERVICE REQUESTED		1N1E22AC 1000	NW CONSERVATIVE BAPTIST ASSN INC	4822 N VANCOUVER AVE	PORTLAND OR 97217
12	RETURN SERVICE REQUESTED		1N1E22AC 1300	DARNELL JACKIE STRONG TR	12165 NW BIG FIR CT	PORTLAND OR 97229
13	RETURN SERVICE REQUESTED		1N1E22AC 1400	NORTH VANCOUVER HOSPITALITY LLC	2008 SE 11TH AVE	PORTLAND OR 97214
14	RETURN SERVICE REQUESTED		1N1E22AC 1500	MC CABE DOUGLAS W	PO BOX 14593	SCOTTSDALE AZ 85267
15	RETURN SERVICE REQUESTED		1N1E22AC 1600	SOURCING VITALITY INC	4922 N VANCOUVER AVE	PORTLAND OR 97217
16	RETURN SERVICE REQUESTED		1N1E22AC 1600	VITALITY CONCEPTS LLC	4922 N VANCOUVER AVE	PORTLAND OR 97217
17	RETURN SERVICE REQUESTED		1N1E22AC 1700	CEASER WILLIAM & CEASER BETTY M	4910 N VANCOUVER AVE	PORTLAND OR 97217-2826
18	RETURN SERVICE REQUESTED		1N1E22AC 1800	WISE AUBURN & WISE KAYDENCE	4850 N VANCOUVER AVE	PORTLAND OR 97217
19	RETURN SERVICE REQUESTED	1N1E22AC 400	POOL JOHN W &	RODNEY V MEYERS REV LIV TR	3113 NE 140TH AVE	PORTLAND OR 97230-2904
20	RETURN SERVICE REQUESTED		1N1E22AC 500	MARK RYAN & PESNER KATELYN	4845 N WILLIAMS AVE	PORTLAND OR 97217
21	RETURN SERVICE REQUESTED		1N1E22AC 600	CELESSIE MAE MYERS REV TR	4835 N WILLIAMS AVE	PORTLAND OR 97217
22	RETURN SERVICE REQUESTED		1N1E22AC 700	KASSA WOLDAY & NEGASH BETH	23 N WYGANT ST	PORTLAND OR 97217
23	RETURN SERVICE REQUESTED	1N1E22AD 8000	PORTLAND COMMUNITY REINVESTMENT	INITIATIVES INC	6329 NE M L KING BLVD	PORTLAND OR 97211-3029
24	RETURN SERVICE REQUESTED		1N1E22AD 8200	LARSSON NIEUWENHUIZEN FAM TR	2803 SE TAYLOR ST	PORTLAND OR 97214
25	RETURN SERVICE REQUESTED		1N1E22AD 8301	METSCHER MARY C	4914 N WILLIAMS AVE	PORTLAND OR 97217
26	RETURN SERVICE REQUESTED		1N1E22AD 8302	BENZ CHRISTOPHER	4910 N WILLIAMS AVE	PORTLAND OR 97217
27	RETURN SERVICE REQUESTED		1N1E22AD 8400	CONTRERAS FERNANDO	4924 N WILLIAMS AVE	PORTLAND OR 97217
28	RETURN SERVICE REQUESTED		1N1E22AD 8500	ALUMU TAMARAT K	3508 N WILLIAMS AVE	PORTLAND OR 97227-1438
29	RETURN SERVICE REQUESTED	1N1E22AD 8600	THE MALLORY BARROW FAMILY TR	C/O BRENDA MALLORY & BRUCE BARROW	2136 NE 10TH AVE	PORTLAND OR 97212
30				CURRENT RESIDENT	122 N ALBERTA ST	PORTLAND OR 97217
31				CURRENT RESIDENT	180 N ALBERTA ST	PORTLAND OR 97217
32				CURRENT RESIDENT	23 N WYGANT ST #C	PORTLAND OR 97217
33				CURRENT RESIDENT	4934 N VANCOUVER AVE	PORTLAND OR 97217
34				CURRENT RESIDENT	5000 N WILLIAMS AVE	PORTLAND OR 97217
35				CURRENT RESIDENT	106 N ALBERTA ST	PORTLAND OR 97217
36				CURRENT RESIDENT	30 N WEBSTER ST #D	PORTLAND OR 97217
37				CURRENT RESIDENT	4944 N WILLIAMS AVE	PORTLAND OR 97217
38				CURRENT RESIDENT	11 NE ALBERTA ST	PORTLAND OR 97211
39				CURRENT RESIDENT	23 N WYGANT ST #A	PORTLAND OR 97217
40				CURRENT RESIDENT	4838 N WILLIAMS AVE	PORTLAND OR 97217
41				CURRENT RESIDENT	4980 N VANCOUVER AVE	PORTLAND OR 97217
42				CURRENT RESIDENT	114 N ALBERTA ST	PORTLAND OR 97217
43				CURRENT RESIDENT	20 N ALBERTA ST	PORTLAND OR 97217
44				CURRENT RESIDENT	23 N WYGANT ST #B	PORTLAND OR 97217
45				CURRENT RESIDENT	30 N WEBSTER ST #A	PORTLAND OR 97217
46				CURRENT RESIDENT	30 N WEBSTER ST #E	PORTLAND OR 97217
47				CURRENT RESIDENT	4840 N WILLIAMS AVE	PORTLAND OR 97217
48				CURRENT RESIDENT	4904 N WILLIAMS AVE	PORTLAND OR 97217
49				CURRENT RESIDENT	4907 N WILLIAMS AVE	PORTLAND OR 97217
50				CURRENT RESIDENT	4911 N WILLIAMS AVE	PORTLAND OR 97217
51				CURRENT RESIDENT	5018 N WILLIAMS AVE	PORTLAND OR 97217
52	RETURN SERVICE REQUESTED	OWNER/PARTY OF INTEREST	PORTLAND CITY OF - PHB	PORTLAND HOUSING BUREAU-PIPER KATE	1900 SW 4TH AVE #7007	PORTLAND OR 97201
53	RETURN SERVICE REQUESTED	APPLICANT	HOLST ARCHITECTURE	POLAND COLE	123 NE 3RD AVE #310	PORTLAND OR 97232
54	RETURN SERVICE REQUESTED	PARTY OF INTEREST	COMMUNITY DEVELOPMENT PARTNERS	LEE JAMES	126 NE ALBERTA ST #202	PORTLAND OR 97211
55	RETURN SERVICE REQUESTED		LAND USE CONTACT	NE COALITION OF NEIGHBORHOODS	4815 NE 7TH AVE	PORTLAND OR 97211
56	RETURN SERVICE REQUESTED		LAND USE CONTACT	SOUL DISTRICT BUSINESS ASSOCIATION	PO BOX 11565	PORTLAND OR 97211
57	RETURN SERVICE REQUESTED		LAND USE CONTACT	WILLIAMS VANCOUVER BUSINESS ASSOC	3355 N WILLIAMS AVE	PORTLAND OR 97227
58	RETURN SERVICE REQUESTED		HUMBOLDT NEIGHBORHOOD ASSOCIATION	ANDERSON PEACH C/O NECN	4815 NE 7TH AVE	PORTLAND OR 97211
59	RETURN SERVICE REQUESTED		LAND USE CONTACT	STATE HISTORIC PRESERVATION OFFICE	725 SUMMER NE #C	SALEM OR 97301
60	RETURN SERVICE REQUESTED		LAND USE CONTACT	AIA URBAN DESIGN COMMITTEE	422 NW 13TH AVE	PORTLAND OR 97209
61	RETURN SERVICE REQUESTED			DOUG KLOTZ	1908 SE 35TH PLACE	PORTLAND OR 97214
62	RETURN SERVICE REQUESTED		PORTLAND METRO REGIONAL SOLUTIONS	C/O DLCD REGIONAL REPRESENTATIVE	1600 SW FOURTH AVE #109	PORTLAND OR 97201
63	RETURN SERVICE REQUESTED		LAND USE CONTACT	PORT OF PORTLAND PLANNING	PO BOX 3529	PORTLAND OR 97208
64	RETURN SERVICE REQUESTED		LAND USE CONTACT	TRANSIT DEVELOPMENT	1800 SW FIRST AVE #300	PORTLAND OR 97201
65				LAND USE CONTACT	PROSPER PORTLAND	129/PROSPER

STRONG PROPERTY

REFERENCE: EA 23-033320
DA 23-052200

TYPE II DESIGN REVIEW

NARRATIVE
November 15, 2023

CONTENTS

I. Proposal ..... page 2
II. Applicable Design Standards ..... page 3

HOLST ARCHITECTURE

I. PROPOSAL

Applicant:	Community Development Partners + Self Enhancement Inc. + Portland Housing Bureau
Architect:	Cole Poland Holst Architecture 123 NE 3rd Avenue, Ste 310 Portland, OR 97232 Phone: 503.233.9856 cpoland@holstarc.com
Project Location:	4931-4947 N Williams Ave

PROPOSAL:

The proposed building is a four-story structure of approximately 80,670 square feet. The building program consists of 75 units of affordable housing including a mixture of one-bedroom, two-bedroom, and three-bedroom units. Ground floor use consists of a mixture of housing units, building lobby, property management offices, and community amenity spaces. The site consists of a courtyard amenity and 31 surface parking spaces accessed off NE Alberta west of the building.

II. APPLICABLE DESIGN STANDARDS

DESIGN REVIEW – Chapter 33.825

33.825.025 Review Procedures
The project is within the Albina Community Plan Area. Per Table 825-1, the project meets the threshold for a Type II procedure, including neighborhood contact process, and must meet the ***Portland Citywide Design Guidelines:***

CONTEXT

PCDG 01. Build on the character, local identity, and aspiration of the place.
Response: The project acknowledges its prominent location within the Albina neighborhood on the intersection of N. Alberta and N. Williams. The intentional utilization of a setback entry at the intersection creates a harmonious transition from the street, fostering a sense of welcoming and an area to pause at covered seating. The incorporation of art walls along both N. Alberta and N. Williams provides an opportunity to contribute to and reflect the community's rich and diverse culture. The central courtyard reintroduces native plantings to the site encouraging exploration.

PCDG 02. Create positive relationships with surroundings.
Response: The projects stepped massing along N. Williams builds a relationship with the single-family structures across the street. By aligning the massing to the neighboring buildings, the design pays homage to their scale and proportions while generating a sense of visual harmony and interconnectedness, while the massing along N. Alberta holds firm to the property line in one larger form. By employing setbacks at the ground floor level, the design reflects the surrounding context, creating a breathing space along the right-of-way. Furthermore, the placement of the community room in alignment with the central courtyard establishes a compelling visual connection to the pedestrian experience.

PCDG 03. Integrate and enhance on-site features and opportunities to contribute to a location's uniqueness.
Response: The sites jogged south property line played a pivotal role in shaping the project's spatial dynamics, capitalizing on the natural features to create a distinctive building footprint. The unique site boundary allowed the building's south 'bar' to jog creating a more diverse open space in the center of the site. The building's deliberate orientation of the east-west courtyard paired with the jogged south bar optimizes the amount of natural light being provided to the space. The courtyard becomes the focal point for residents and pedestrians alike, fostering a sense of connection with the community through carefully curated sightlines that encourage engagement and interaction.

PUBLIC REALM

PCDG 04. Design the sidewalk level of buildings to be active and human-scaled.
Response: The design incorporates a combination of elements that promote a lively pedestrian experience. Canopies are integrated along both N. Williams and N. Alberta facades. The inclusion of strategically placed seating zones encourages social interaction and provides opportunities for people to pause and engage. These zones are located outside the main building entry and secondary entrance from the right-of-way to the large community room. The design emphasizes a connection between the sidewalk and interior, with large expanses of storefront

between the most active building programs. The deliberate placement of art on blank walls enriches the streetscape. Units along N. Alberta include private patios for the residents buffered by landscape planters that enhance the experience by softening the transition from public to private space. Altogether, these design elements create an inviting, active, and human-centric experience that encourages social interaction, fosters a sense of community, and enhances the overall urban experience for pedestrians and residents.

PCDG 05. Provide opportunities to pause, sit, and interact.
Response: The deliberate incorporation of spaces for sitting, resting, and socializing within the design underscores an intentional effort to foster community-building and social interaction. The setback main entry is complimented with covered seating and vegetation, providing a welcoming transition from a busy street corner. Additional covered seating and bike parking is integrated into the building setbacks along N. Williams outside the large community room, where gatherings can continue into the public realm. The incorporation of art feature walls within the community room and adjacent to it on the exterior adds a depth of character to the environment, acting as a catalyst for further interaction. The courtyard serves as a continuation of the community space, blending indoors with outdoors. The landscaping incorporates elements of nature play, with a variety of seating areas for large and small gatherings, promoting health, wellness, and socialization.

PCDG 06. Integrate and minimize the impact of parking and necessary building services.
Response: The on-grade parking lot has been designed to minimize its impact while integrating into the surroundings. The utilities, transformer and pv array backup battery are discreetly integrated with a lush landscape buffer. The battery backup has an additional layer of screening with a "good neighbor" fence provided around it. An identical fence is provided along the south property line providing additional screening for the parking lot. The parking lot's thoughtful placement in proximity to the courtyard allows for a seamless connection between different areas of activity. The courtyard and multiple layers of landscaping foster a sense of continuity between the parking area and communal spaces. The landscape buffer not only screens the parking lot, but also serves as a transitional element, guiding individuals from the parking area to the vibrant social hub of the courtyard.

QUALITY AND RESILIENCE

PCDG 07. Support the comfort, safety, and dignity of residents, workers, and visitors through thoughtful site and building design.
Response: The project thoughtfully integrates site and building elements to create a harmonious and functional environment. Entries are setback from the sidewalk, providing seating areas, gathering spots, and areas to pause. The central courtyard space fosters a sense of community and connection with multiple pathways, seating areas, gathering spots, nature play zones, and lighting. Windows around the project strike a balance between visibility and privacy. Ground floor units have native landscaping directly outside. This careful consideration of sightlines contributes to a sense of openness and connectivity, enhancing the interaction between indoor and outdoor spaces.

PCDG 08. Design for quality, using enduring materials and strategies with a coherent approach.
Response: Quality design throughout the project is evident through a hierarchy that emphasizes the functions withing the building. Building entries stand out as focal points, marked by an abundance of glazing that not only invites natural light into the interiors but also offers a visual invitation to the passerby. These entries are adorned with covered seating, creating welcoming spaces that encourage gathering and interaction. Openings in the building skin are inset, serving

as visual relief across the façade. Additionally, the integration of venting next to windows ensures a seamless visual appearance. Rooftop mechanical equipment is stepped back from view, preserving the aesthetic integrity of the project. Fiber cement is carefully utilized exclusively at residential areas. Materials in “touch zones” consist of stucco and cedar, adding warmth and tactility around the base.

PCDG 09. Design for resilience, health, and stewardship of the environment, ensuring adaptability to climate change and the evolving needs of the city.
Response: The project is committed to design for resilience, health, and stewardship of the environment. The inclusion of native plantings around the site not only enhances the visual appeal but also fosters biodiversity and reduces water consumption by utilizing plants adapted to the local climate. Shade trees strategically positioned throughout the parking lot serve as a natural cooling mechanism, mitigating the urban heat island effect. Moreover, the integration of rooftop solar panels coupled with battery backup systems exemplifies the approach to renewable energy and resilience. Additionally, the design prioritizes the health and well-being of the occupants. Natural light is maximized throughout the building, creating bright and inviting interiors. The inclusion of energy recovery ventilators at each unit and public space ensures a continuous supply of fresh air throughout the building. Overall, these design elements reflect a holistic approach to sustainability, resilience, and occupant well-being.

END

Neighborhood Contact – Certification Statement

The Neighborhood Contact requirement provides a way to learn more about a proposed development before a land use review or building permit is submitted. The applicant must provide documentation with the land use review or building permit application to document that Neighborhood Contact requirements are met. There are three different Neighborhood Contact processes, each requiring slightly different documentation. These requirements are listed below. This form can also be used to satisfy the requirements to submit a signed statement certifying certain requirements related to timelines and note distribution were met.

To complete this form:

1. Check the box that corresponds to the Neighborhood Contact process required.
2. Sign the bottom of this form to verify that timeline and note distribution requirements were met.
3. Submit the listed documentation requirements with the land use review or building permit application to verify other Neighborhood Contact requirements were met.

❒ Neighborhood Contact 1

- A copy of the initial notification email or letter sent to the neighborhood association, district neighborhood coalition, and business association;
- A list of email or postal addresses to which the initial notification email or letter was sent;
- Photograph(s) of the sign(s) installed at the proposed development sites that legibly shows the sign's text;
- A signed statement certifying that:
  - The initial notification email or letter was sent at least 35 days, but not more than 1 year, before applying for the land use review or building permit;
  - The required sign(s) was posted at least 35 days, but not more than 1 year, before applying for the land use review or building permit;

❒ Neighborhood Contact 2

- A copy of the initial notification email or letter sent to the neighborhood association(s), district neighborhood coalition(s), and business association(s);
- A list of email or postal addresses to which the initial notification email or letter was sent;
- A copy of the attendance log that includes attendees' name and address or email address;
- Photograph(s) of the sign(s) installed at the proposed development sites that legibly shows the sign's text;
- A signed statement certifying that:
  - The initial notification email or letter was sent at least 35 days, but not more than 1 year, before applying for the land use review or building permit;
  - The required sign(s) was posted at least 35 days, but not more than 1 year, before applying for the land use review or building permit;
  - The required meeting was held at least 14 days before applying for the land use review or building permit and at least 14 days after sending the initial notification email or letter and posting the required sign(s); and
  - Notes from the public meeting were emailed or mailed to the neighborhood association, district neighborhood coalition, business association, school district and any meeting attendees who provided an email or postal address, prior to applying for the land use review or building permit.

continued on back

☒ Neighborhood Contact 3

- A copy of the initial notification email or letter sent to the neighborhood association(s), district neighborhood coalition(s), business association, and school district;
- A list of email or postal addresses to which the initial notification email or letter was sent;
- A copy of the attendance log that includes attendees' name and address or email address;
- Photograph(s) of the sign(s) installed at the proposed development sites that legibly shows the sign's text;
- A signed statement certifying that:
  - The initial notification email or letter was sent at least 35 days, but not more than 1 year, before applying for the land use review or building permit;
  - The required sign(s) was posted at least 35 days, but not more than 1 year, before applying for the land use review or building permit;
  - The required meeting request was sent;
  - The neighborhood association either did not reply or declined the request, or that the neighborhood association meeting took place; and
  - Notes from the public meeting were emailed or mailed to the neighborhood association, district neighborhood coalition, business association, school district and any meeting attendees who provided an email or postal address, prior to applying for the land use review or building permit.

By filling out this form, I acknowledge the Neighborhood Contact requirements for the marked option above have been met.

Printed Name: Rex Ingram Date: 11.16.23

☑ I acknowledge this typed name as my signature

Additional Printed Name: _____ Date: _____

☐ I acknowledge this typed name as my signature

INITIAL NOTIFICATION EMAIL

Rex Ingram

Subject:	Strong Property Neighborhood Contact Meeting
Location:	The Abbey Cafe, 126 NE Alberta St. Portland OR 97211
Start:	Tue 8/1/2023 6:00 PM
End:	Tue 8/1/2023 7:30 PM
Show Time As:	Tentative
Recurrence:	(none)
Meeting Status:	Not yet responded
Organizer:	Rex Ingram
Required Attendees:	James Lee; Freda Walker; Trent Aldridge; Sahaan McKelvey; Marc Wiater; Alex Colas; Marc-Daniel Domond; Todd Redfern; Piper, Kate; Monroe, Staci; Denson, Lina; Kevin Valk; Bryan Bahr; Cole Poland; Lane Pak; Darrick Williams
Optional Attendees:	lisa stanger; Blest Weter; Nana Hoerth; HumboldtNeighborhood@gmail.com; Info@Necoalition.org; info@nnebaportland.org; fawnaberson@gmail.com; Dwhite2@pps.net; nnestrategy@portlandoregon.gov

Please join us at the Abbey Cafe for our first Neighborhood contact meeting to review the new housing development planned for the Strong Family Property (on N. Alberta and N. Williams). See Flyer attached for details.

LIST OF EMAIL CONTACTS

Rex Ingram

From: Rex Ingram
Sent: Thursday, June 8, 2023 12:44 PM
To: James Lee; Freda Walker; Trent Aldridge; Sahaan McKelvey; Alex Colas; Piper, Kate; Denson, Lina; Kevin Valk; Bryan Bahr; Cole Poland; Lane Pak; Darrick Williams; Marc-Daniel Domond; Marc Wiater; Todd Redfern
Subject: Strong Property neighborhood contact
Attachments: Neighborhood Contact 3 Timeline 2022.04.pdf; Neighborhood Contact List Complete - PortlandMaps_ 4931-4947 N WILLIAMS AVE.pdf

Categories: Filed by Newforma

Good afternoon all,

I'm working on first steps of our Neighborhood contact requirement for our Landuse application submittal (see attached timeline). I've identified the following groups to contact:
Humboldt Neighborhood Association
HumboldtNeighborhood@gmail.com

Neighborhood Coalition
Northeast Coalition of Neighborhoods
Info@Necoalition.org

Business Districts:
Williams District
info@williamsdistrict.com

Soul District
info@nnebaportland.org

School District:
Portland Public Schools
Dana White
Dwhite2@pps.net

Optional?
North / Northeast Neighborhood Housing Strategy
nnestrategy@portlandoregon.gov

We are not directly adjacent to any other associations or groups (within 400').

Time frame per schedule would be as follows:
6.08 Initial Contact
6.29 Notify BDS; neighborhood association, coalition and business associations + install signs
7.31 Attend neighborhood meeting (actual date is 4th Tues of the month – 7.25)

Please let me know if you have any questions or concerns. I'd like to reach out via email to these groups by the end of the day today.

August 1, 2023

Strong Property Neighborhood Meeting

Please sign in here! We will email you a summary of this event by August 8th.

NAME	EMAIL ADDRESS	AFFILIATION [i.e. Neighborhood Association, company, etc.]
Molly franks	Molly_franks@yahoo.com	neighborhood
Leslie Goodlow	Auntses@hotmail.com	PHB/neighborhood
Sahaan Mckelvey	sahaanM@selfadvancement.org	SEI
Angelina Denson	angelinadenson@gmail.com	community

August 1, 2023

Strong Property Neighborhood Meeting

Please sign in here! We will email you a summary of this event by August 8th.

NAME	EMAIL ADDRESS	AFFILIATION [i.e. Neighborhood Association, company, etc.]
Bkst Weter	bkst@vernureportland.org	WUBA District Manager

LU 23-103655 DZ Exhibit A2

Strong Property Signage - N. Williams Ave
6.30.23 (erected 8 a.m.)

Strong Property Signage - N. Williams Ave
6.30.23 (erected 8 a.m.)

Strong Property Signage - N. Williams Ave
6.30.23 (erected 8 a.m.)

Strong Property Signage - N. Alberta Street
6.30.23 (erected 8 a.m.)

Strong Property Signage - N. Alberta Street
6.30.23 (erected 8 a.m.)

Portland Housing Bureau

City of Portland, Bureau of Development Services
1900 SW 4th Avenue
Portland OR 97201

Date: 10/19/2023

RE: GATR/PHB Funded Project Verification

This letter is to confirm that the project listed below is now gap-funded by the Portland Housing Bureau and should be given priority by the Bureau of Development Services for permitting and land use processing.

Project Name:	Strong Property
Project Address:	4931-4947 N WILLIAMS AVE and 20 N ALBERTA ST, PORTLAND, OR 97217
PHB Sr. Housing Construction Coordinator:	Angelina Denson

Please do not hesitate to contact myself or any PHB Sr. Housing Construction Coordinator for further information. Thank you for your attention and consideration to this affordable housing project.

Kind regards,

Angelina Denson
Angelina Denson

Angelina 'Lina' Denson | Senior Housing Construction Coordinator
City of Portland | Portland Housing Bureau
Housing Development & Construction Services Team
Pronouns: they/them, she/her Why do I list my pronouns?
Cellphone: (503) 823 – 8737 (text preferred)
Email: angelina.denson@portlandoregon.gov

City of Portland, Oregon - Bureau of Development Services
1900 SW Fourth Avenue • Portland, Oregon 97201 | 503-823-7300 | www.portlandoregon.gov/bds

Request for Extension of 120-Day Review Period

State law requires the City to issue a final decision on land use reviews within 120 days of receiving a complete application. State law also allows the applicant to request in writing an extension of the 120-day review period for up to an additional 245 days. When extensions are requested, it is important to ensure that there is adequate time to accommodate the required public review, drafting the decision, and any required hearings (including appeals) within the extended review period. Generally, a final decision must be rendered approximately 60 days prior to the end of the review period in order to accommodate appeals.

If requesting an extension of the 120-day review period, please sign this form and return it to the Bureau of Development Services (BDS) planner assigned to your case.

Case Information

1. Applicant Name: Cole Poland
2. Land Use Case Number: LU # 23-103655
3. BDS Planner Name: Staci Monroe

Extension Request

Please check one of the following:

■ Extend the 120-day review period for an additional 42 days.
(insert number)

☐ Maximum allowed extension: 245 days

The total number of extensions requested cannot exceed 245 days.

By signing this form, I acknowledge that the 120-day review period for my land use review application will be extended for the number of days specified.

Applicant Signature: Cole Poland Digitally signed by Cole Poland DN: C=US, E=cpoland@holstarc.com, O=Holst Architecture, CN=Cole Poland Date: 2024.01.10 15:42:18-08'00' Date 01.10.2024

BDS Staff Complete This Section

Received by (print name): **Staci Monroe** Date Received **1/10/29**

City of Portland, Oregon - Bureau of Development Services
1900 SW Fourth Avenue • Portland, Oregon 97201 | 503-823-7300 | www.portlandoregon.gov/bds

Request for Extension of 120-Day Review Period

State law requires the City to issue a final decision on land use reviews within 120 days of receiving a complete application. State law also allows the applicant to request in writing an extension of the 120-day review period for up to an additional 245 days. When extensions are requested, it is important to ensure that there is adequate time to accommodate the required public review, drafting the decision, and any required hearings (including appeals) within the extended review period. Generally, a final decision must be rendered approximately 60 days prior to the end of the review period in order to accommodate appeals.

If requesting an extension of the 120-day review period, please sign this form and return it to the Bureau of Development Services (BDS) planner assigned to your case.

Case Information

1. Applicant Name: Cole Poland
2. Land Use Case Number: LU # 23-103655
3. BDS Planner Name: Staci Monroe

Extension Request

Please check one of the following:

■ Extend the 120-day review period for an additional 20 days.
(insert number)

☐ Maximum allowed extension: 245 days

The total number of extensions requested cannot exceed 245 days.

By signing this form, I acknowledge that the 120-day review period for my land use review application will be extended for the number of days specified.

Applicant Signature: Cole Poland Digitally signed by Cole Poland DN: C=US, E=cpoland@holstarc.com, O=Holst Architecture, CN=Cole Poland Date: 2024.01.30 13:05:11-08'00' Date 01.30.2024

BDS Staff Complete This Section

Received by (print name): Staci Monroe Date Received 1/30/24

HOLST

HOLST FOR COMMUNITY DEVELOPMENT PARTNERS AND SELF ENHANCEMENT INC.

STRONG PROPERTY

TYPE II DESIGN REVIEW

SUBMITTED November 14, 2023

LU 23-103655 DZ
Exhibit A6

TEAM

PROPERTY	4931-4947 N WILLIAMS AVE
PROJECT VALUATION:	$24,000,000
LAND USE:	
DESIGN ADVICE REQUEST:	DA 23-052200
EARLY ASSISTANCE:	EA 23-033320
SUBMITTED:	November 15, 2023
ARCHITECT:	HOLST
CONTACT:	Cole Poland cpoland@holstarc.com 503 233 9856
LANDSCAPE:	Ground Workshop
CONTACT:	Tommy Solomon ts@groundworkshop.net 971 544 7418
CIVIL	Vega Civil
CONTACT:	Casey Jones casey@vegacivil.com 503 662 1901
OWNER:	Community Development Partners
CONTACT:	James Lee james@communitydevpartners.com 971 533 7466

SHEET INDEX

EXHIBIT 'C'

TABLE OF CONTENTS	C.2
ZONING SUMMARY	C.3
SITE PLAN	C.4
FLOOR AND ROOF PLANS	C.5-C.7
ELEVATIONS	C.8-C.13
BUILDING SECTIONS	C.14-C.15
BUILDING DETAILS	C.16-C.29
LANDSCAPE DRAWINGS	C.30-43
CIVIL PLAN	C.44-C.45
OUTDOOR LIGHTING PLAN	C.46
CUTSHEETS	C.47-C.51

EXHIBIT 'APP'

RENDERINGS	APP.2-APP.12
SITE CONTEXT	APP.13-APP.15
MECHANICAL EQUIPMENT SIGHTLINES	APP.16
MASSING & DESIGN CONCEPT	APP.17
FAR DIAGRAM	APP.18
GROUND FLOOR WINDOWS	APP.19
RESPONSES TO DAR - SUMMARY OF COMMENTS	APP.20-APP.21

© 2023 HOLST ARCHITECTURE INC.

ZONING SUMMARY

PROPERTY ADDRESS	4931-4947 N WILLIAMS AVE / 20 N ALBERTA ST / 106 N ALBERTA ST / 114 N ALBERTA ST
PROPERTY ID	R308855, R639049, R308856, R308873, R308872, R308871
COUNTY	MULTNOMAH
STATE ID	1N1E22AC 1200
ZONING MAP	2530
SITE AREA	40,910 SF (INCLUDES DEDICATION)
LAND USE ZONING	CM2 - COMMERCIAL MIXED USE 2
OVERLAYS	D-DESIGN
COMP PLAN DESIGNATION	MU-U - MIXED USED - URBAN CENTER
PLAN DISTRICT	N/A
DESIGN REVIEW	TYPE II
LOT SIZE (33.130.200)	N/A
BASE FAR (33.130.205)	2.5 to 1
BONUS FAR (33.510.205.C.2.a)	1.5 to 1
MAX FAR W/ BONUS	4 to 1 *MEETS*
BASE HEIGHT (33.130.210.B)	45 FT
BONUS HEIGHT (33.130.212.C)	10 FT
MAX HEIGHT W/ BONUS	55 FT *MEETS*
MIN BLDG SETBACKS (TABLE 130-2)	5FT *MEETS*
MAX BLDG SETBACKS (TABLE 130-2)	10 FT *MEETS*
MAX BLDG COVERAGE (TABLE 130-2)	100% *MEETS*
BLDG LENGTH AND ARTICULATION (33.130.222)	REQUIRED *MEETS*
MIN LANDSCAPED AREA (TABLE 130-2)	15% *MEETS*
LANDSCAPE BUFFER (33.130.215.B.2.b.3)	L3 UP TO 10' *MEETS*
TREES (TITLE 11 CH. 11.50)	TREE PLAN REQUIRED
REQUIRED OUTDOOR AREAS (TABLE 130-2)	REQUIRED *MEETS*
GROUND FLOOR WINDOWS (33.130.230.B)	MIN 40% GROUND LEVEL WALL AREA OF STREET-FACING FACADES *MEETS*
WINDOWS IN STREET FACING FACADE (33.130.230.A)	MIN 15% *MEETS*
SCREENING (33.130.235.C)	L2 SCREENING REQUIRED. EQUIPMENT ON ROOF IS SET BACK FROM ROOF EDGES FACING THE R ZONE 3 FEET FOR EACH FOOT OF HEIGHT OF THE EQUIPMENT. *MEETS*
PEDESTRIAN STANDARDS (33.130.240)	CONNECTION BETWEEN MAIN ENTRY AND ADJACENT STREET REQUIRED, ADDITIONAL CONNECTION NOT REQUIRED SINCE >50% OTHER FACADE IS WITHIN 10 FT OF STREET *MEETS*
TRANSIT STREET MAIN ENTRANCE (33.130.242)	REQUIRED *MEETS*
MAX PARKING (33.266.115 TABLE 266-2)	1.35 PER UNIT *MEETS*
BIKE PARKING - LONG TERM (33.266.200 TABLE 266-6)	1.5 PER UNIT (113 SPACES) *MEETS*
BIKE PARKING - SHORT TERM (33.266.200 TABLE 266-6)	1 PER 20 UNITS (4 SPACES) *MEETS*
LOADING SPACES (33.266.310.C.1.a)	1 STANDARD B SPACE *MEETS*

TOTAL BUILDING AREA	
LEVEL 01	20,441 SF
LEVEL 02-04	60,228 SF
TOTAL GSF	**80,669 SF**

© 2023 HOLST ARCHITECTURE INC.

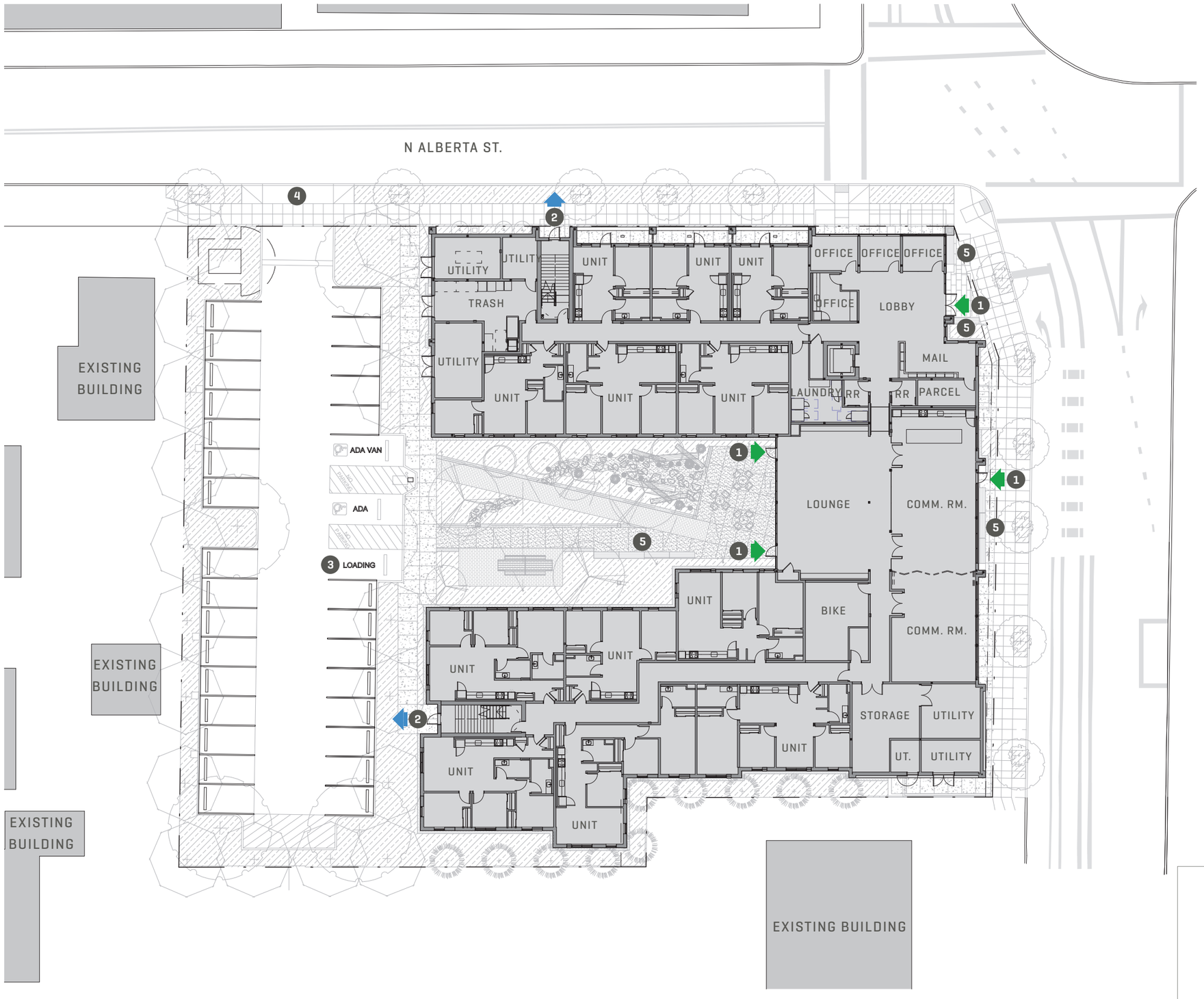

48' - 2", 4 STORY TYPE 5A CONSTRUCTION

SITE AREA: 41,210 SF

BUILDING FOOTPRINT: 20,920 SF

- PROJECT PROPERTY LINE
1. BUILDING ENTRY
2. EXIT
3. LOADING
4. NEW CURB CUT, REF CIVIL
5. BENCH

SCALE: 1" = 30' - 0"

0' 15' 30' 60'

N

HOLST

© 2023 HOLST ARCHITECTURE INC.

STRONG PROPERTY
4931-4947 N WILLIAMS AVE
PORTLAND, OR 97217

DESIGN REVIEW
11.15.2023

title : SITE PLAN

LU NO. LU 23-103655 DZ
Exhibit A6

sheet : C.4

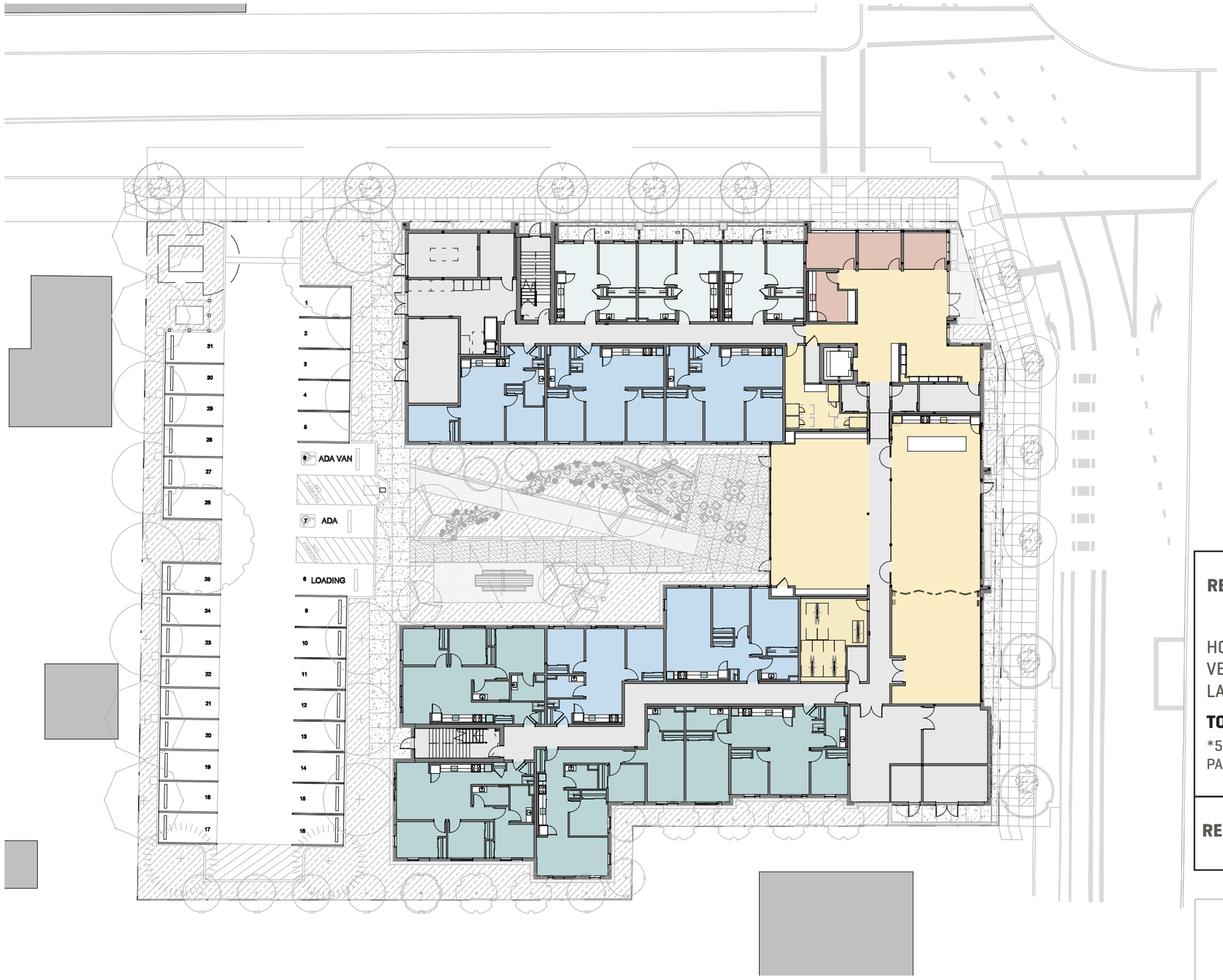

LEGEND

- 1-BEDROOM
- 2-BEDROOM
- 3-BEDROOM
- AMENITY SPACES
- OFFICE
- MECH / B.O.H. / CIRC.

REQUIRED LONG-TERM BIKE PARKING: 75 UNITS X 1.5 STALLS = 113

		REQ'D	PROVIDED
HORIZONTAL (30% MIN.):	113 X .3	34	**38**
VERTICAL* (70% MAX.):	113 X .7	MAX 79	**78**
LARGE BIKE SPACE (5% MIN.):	113 X .05	6	**6**
TOTAL PROVIDED			**122**

*54 VERTICAL IN UNIT BIKE PARKING INCLUDED IN COUNT. 50% REQUIRED BIKE PARKING ALLOWABLE IN UNIT. 113 X .5 = 56 ALLOWABLE SPACES.

REQUIRED SHORT-TERM BIKE PARKING: 1 PER 20 UNITS 75 / 20 = 4
PROVIDED: 4

SCALE: 1" = 30' - 0"

0' 15' 30' 60'

N

HOLST

© 2023 HOLST ARCHITECTURE INC.

STRONG PROPERTY
4931-4947 N WILLIAMS AVE
PORTLAND, OR 97217

DESIGN REVIEW
11.15.2023

title : LEVEL 01 FLOOR PLAN

LU NO. LU 23-103655 DZ
Exhibit A6

sheet : C.5

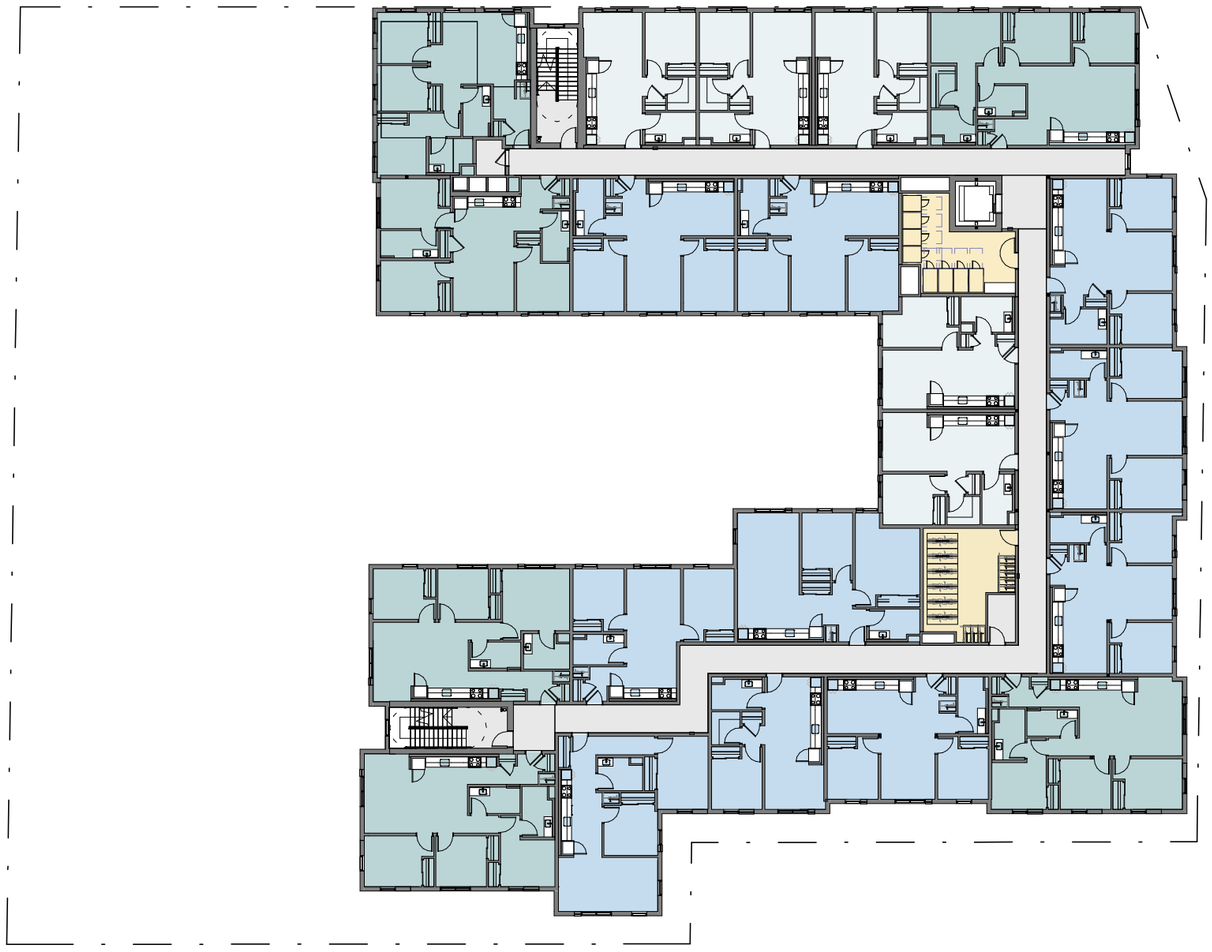

LEGEND

- 1-BEDROOM
- 2-BEDROOM
- 3-BEDROOM
- AMENITY SPACES
- OFFICE
- MECH / B.O.H. / CIRC.

SCALE: 1" = 30' - 0"

N

0' 15' 30' 60'

HOLST

© 2023 HOLST ARCHITECTURE INC.

STRONG PROPERTY

4931-4947 N WILLIAMS AVE
PORTLAND, OR 97217

DESIGN REVIEW

11.15.2023

title : LEVEL 01 FLOOR PLAN

LU NO. LU 23-103655 DZ
Exhibit A6

sheet : C.6

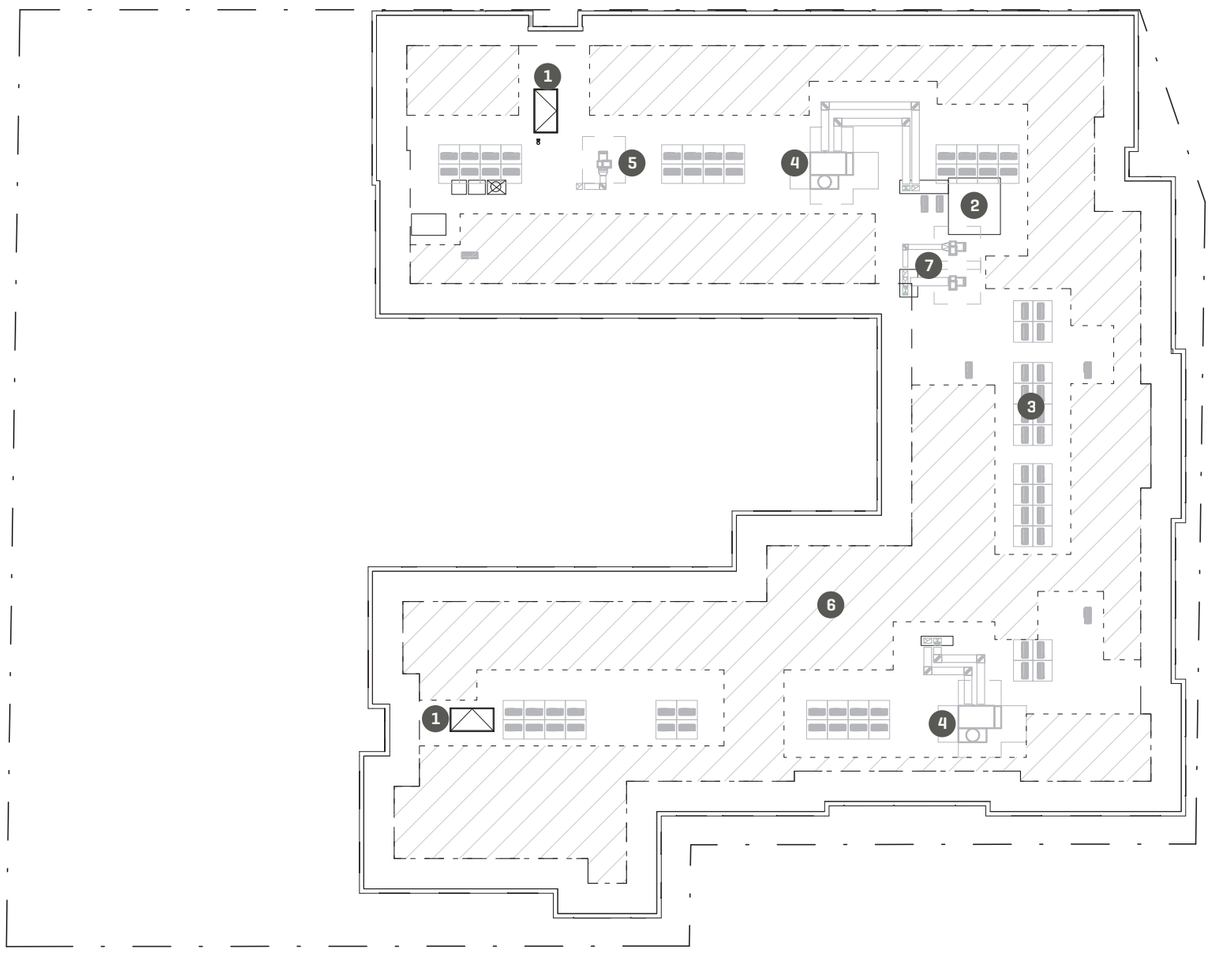

1. ROOF ACCESS HATCH
2. ELEVATOR OVERRUN
3. HEAT PUMP CONDENSING UNITS
4. DEDICATED OUTDOOR AIR SYSTEM
5. EXHAUST FAN
6. AREA FOR FUTURE PV PANELS (HATCHED)
7. LAUNDRY MAKE-UP AIR

SCALE: 1" = 30' - 0"

N

0' 15' 30' 60'

HOLST

© 2023 HOLST ARCHITECTURE INC.

STRONG PROPERTY

4931-4947 N WILLIAMS AVE
PORTLAND, OR 97217

DESIGN REVIEW

11.15.2023

title : ROOF PLAN

LU NO. LU 23-103655 DZ
Exhibit A6

sheet : C.7

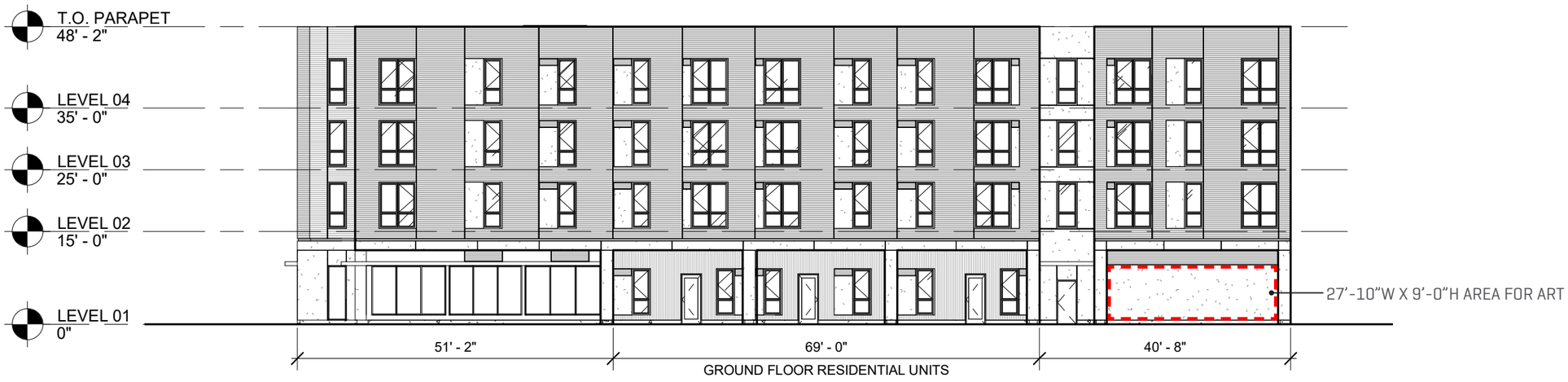

NORTH ELEVATION
1" = 20'-0"

GLAZING PERCENTAGE: 1,855 SF / 7,672 SF = **24%**
TOTAL FACADE AREA: **7,672 SF** , TOTAL GLAZED AREA: **1,855 SF**

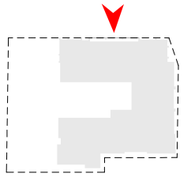

EAST ELEVATION
1" = 20'-0"

GLAZING PERCENTAGE: 2,110 SF / 7,644 SF = **27%**
TOTAL FACADE AREA: **7,644 SF** , TOTAL GLAZED AREA: **2,110 SF**

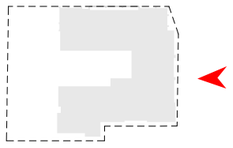

HOLST

© 2023 HOLST ARCHITECTURE INC.

STRONG PROPERTY
4931-4947 N WILLIAMS AVE
PORTLAND, OR 97217

DESIGN REVIEW
11.15.2023

title : BUILDING ELEVATIONS

LU NO. LU 23-103655 DZ
Exhibit A6

sheet : C.8

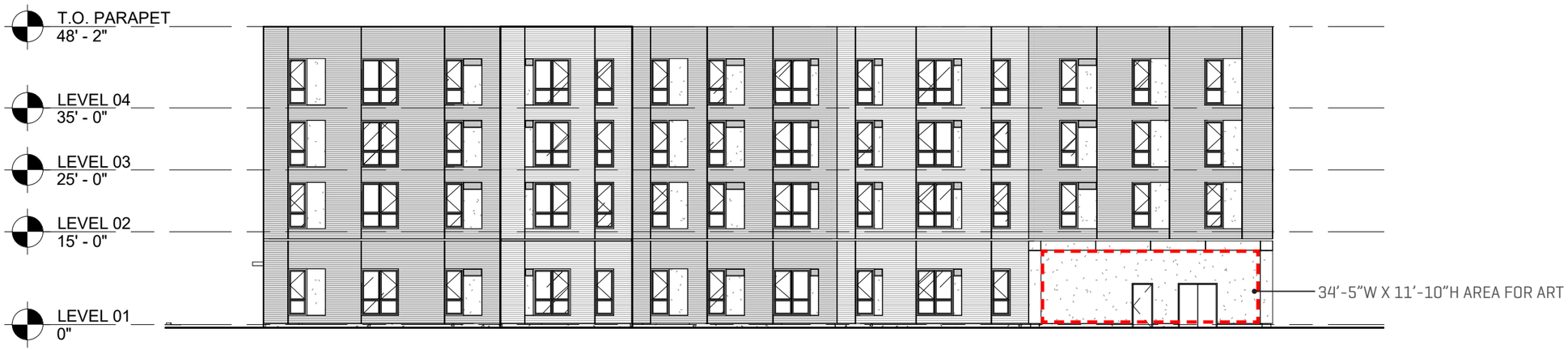

SOUTH ELEVATION
1" = 20'-0"

WEST ELEVATION
1" = 20'-0"

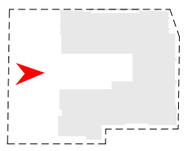

HOLST

© 2023 HOLST ARCHITECTURE INC.

STRONG PROPERTY
4931-4947 N WILLIAMS AVE
PORTLAND, OR 97217

DESIGN REVIEW
11.15.2023

title : BUILDING ELEVATIONS

LU NO. LU 23-103655 DZ
Exhibit A6

sheet : C.9

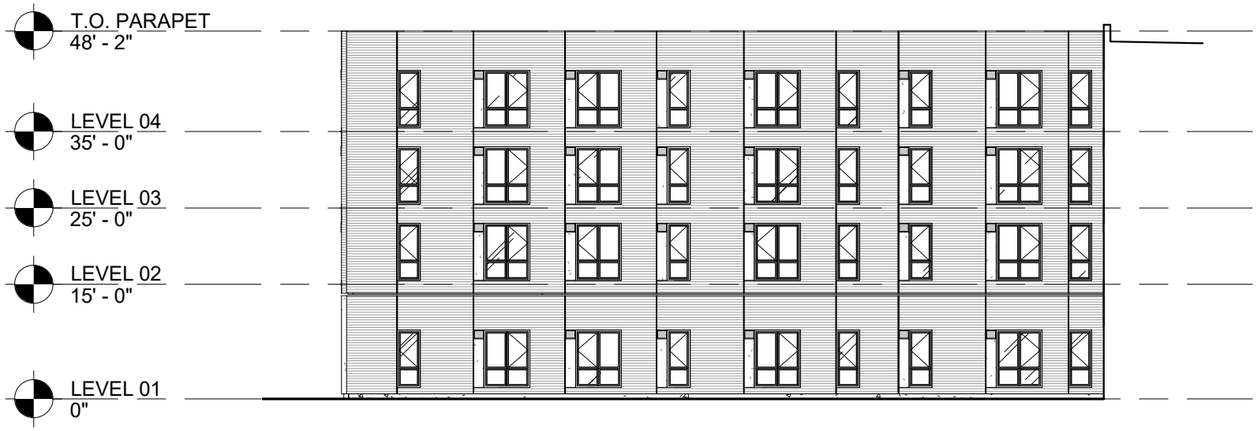

COURTYARD ELEVATION
1" = 20'-0"

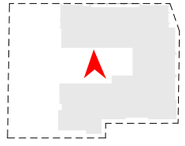

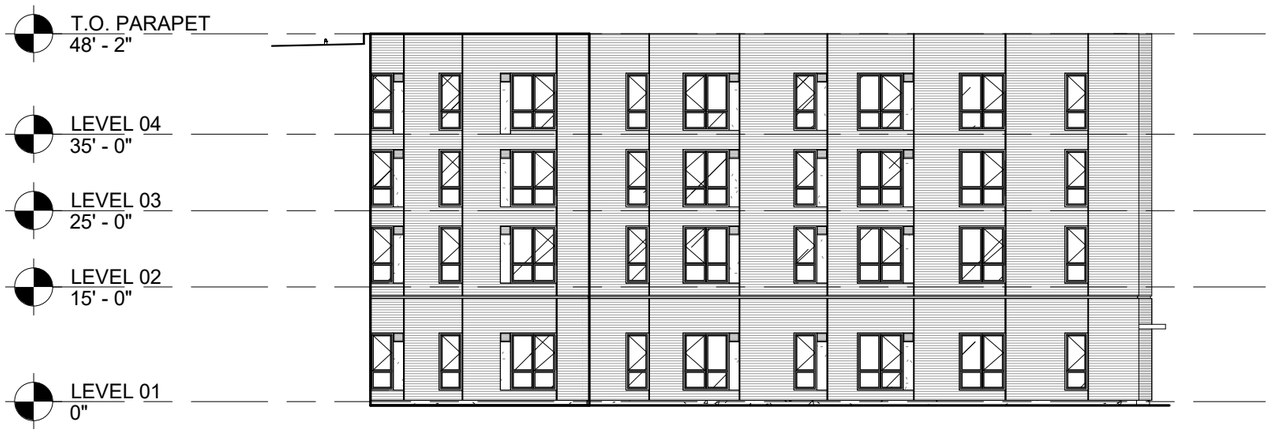

COURTYARD ELEVATION
1" = 20'-0"

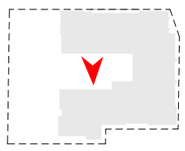

NORTH ELEVATION
1" = 20'-0"

*ART SHOWN FOR LOCATION ONLY (NOT ACTUAL DESIGN)

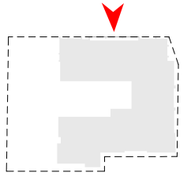

EAST ELEVATION
1" = 20'-0"

*ART SHOWN FOR LOCATION ONLY (NOT ACTUAL DESIGN)

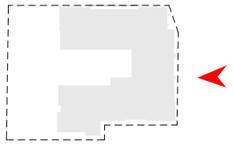

FCP-1
FIBER CEMENT PANEL - SMOOTH - ADOBE

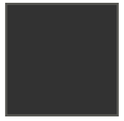

FCP-2
FIBER CEMENT PANEL - SMOOTH - DARK

FCS-1
FIBER CEMENT SIDING - LAP - LIGHT

FCS-2
FIBER CEMENT SIDING - LAP - DARK

ML-1
METAL LOUVER - ADOBE

ML-2
METAL LOUVER - DARK

MF-X
CUSTOM COLOR METAL FLASHING

SF-1
ALUMINUM STOREFRONT AND ENTRANCES

WND-X
VINYL WINDOW

WDX-1
T&G CEDAR SIDING

CONC-1
SMOOTH FINISH CONCRETE

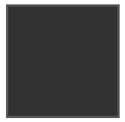

MP-1
CUSTOM COLOR PLATE STEEL CANOPY

ST-1
STUCCO - ADOBE

ST-2
STUCCO - DARK

HOLST
© 2023 HOLST ARCHITECTURE INC.

STRONG PROPERTY
4931-4947 N WILLIAMS AVE
PORTLAND, OR 97217

DESIGN REVIEW
11.15.2023

title : BUILDING ELEVATIONS

LU NO. LU 23-103655 DZ
Exhibit A6

sheet : C.11

SOUTH ELEVATION
1" = 20'-0"

*ART SHOWN FOR LOCATION ONLY (NOT ACTUAL DESIGN)

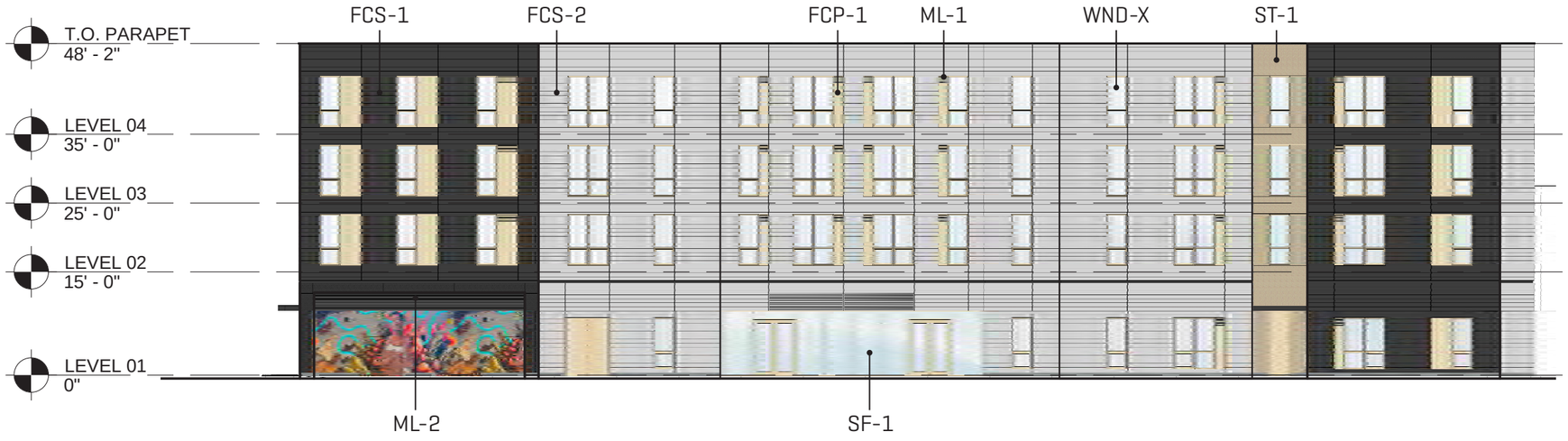

WEST ELEVATION
1" = 20'-0"

*ART SHOWN FOR LOCATION ONLY (NOT ACTUAL DESIGN)

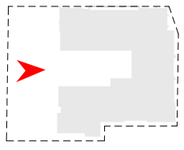

FCP-1
FIBER CEMENT PANEL - SMOOTH - ADOBE

FCP-2
FIBER CEMENT PANEL - SMOOTH - DARK

FCS-1
FIBER CEMENT SIDING - LAP - LIGHT

FCS-2
FIBER CEMENT SIDING - LAP - DARK

ML-1
METAL LOUVER - ADOBE

ML-2
METAL LOUVER - DARK

MF-X
CUSTOM COLOR METAL FLASHING

SF-1
ALUMINUM STOREFRONT AND ENTRANCES

WND-X
VINYL WINDOW

WDX-1
T&G CEDAR SIDING

CONC-1
SMOOTH FINISH CONCRETE

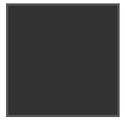

MP-1
CUSTOM COLOR PLATE STEEL CANOPY

ST-1
STUCCO - ADOBE

ST-2
STUCCO - DARK

HOLST

© 2023 HOLST ARCHITECTURE INC.

STRONG PROPERTY
4931-4947 N WILLIAMS AVE
PORTLAND, OR 97217

DESIGN REVIEW
11.15.2023

title : BUILDING ELEVATIONS

LU NO. LU 23-103655 DZ
Exhibit A6

sheet : C.12

COURTYARD ELEVATION
1" = 20'-0"

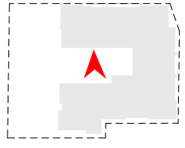

COURTYARD ELEVATION
1" = 20'-0"

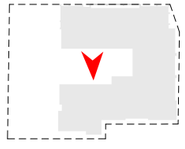

FCP-1
FIBER CEMENT PANEL - SMOOTH - ADOBE

FCP-2
FIBER CEMENT PANEL - SMOOTH - DARK

FCS-1
FIBER CEMENT SIDING - LAP - LIGHT

FCS-2
FIBER CEMENT SIDING - LAP - DARK

ML-1
METAL LOUVER - ADOBE

ML-2
METAL LOUVER - DARK

MF-X
CUSTOM COLOR METAL FLASHING

SF-1
ALUMINUM STOREFRONT AND ENTRANCES

WND-X
VINYL WINDOW

WDX-1
T&G CEDAR SIDING

CONC-1
SMOOTH FINISH CONCRETE

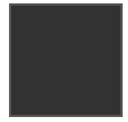

MP-1
CUSTOM COLOR PLATE STEEL CANOPY

ST-1
STUCCO - ADOBE

ST-2
STUCCO - DARK

HOLST

© 2023 HOLST ARCHITECTURE INC.

STRONG PROPERTY
4931-4947 N WILLIAMS AVE
PORTLAND, OR 97217

DESIGN REVIEW
11.15.2023

title : BUILDING ELEVATIONS

LU NO. LU 23-103655 DZ
Exhibit A6

sheet : C.13

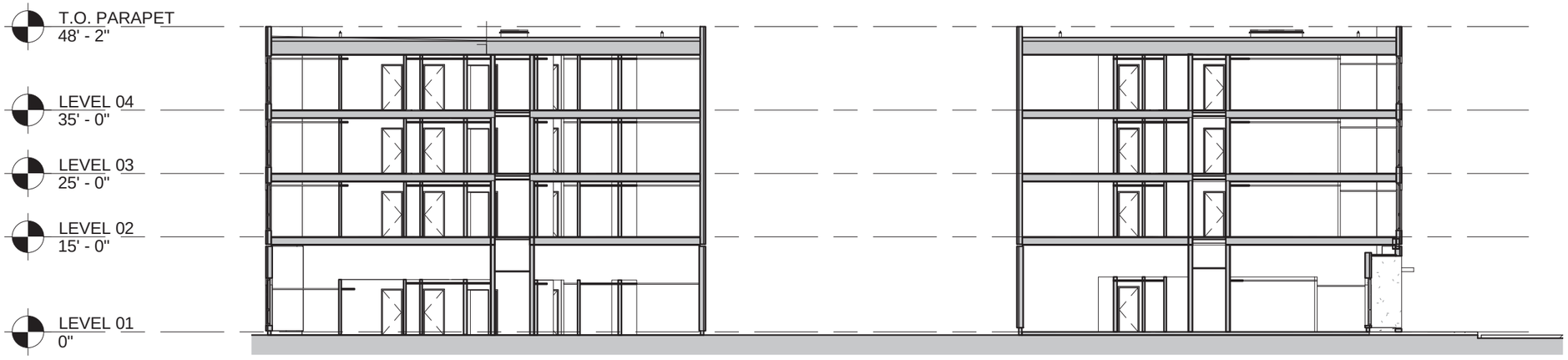

N/S SECTION
1" = 20'-0"

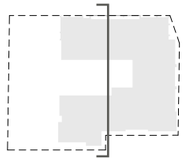

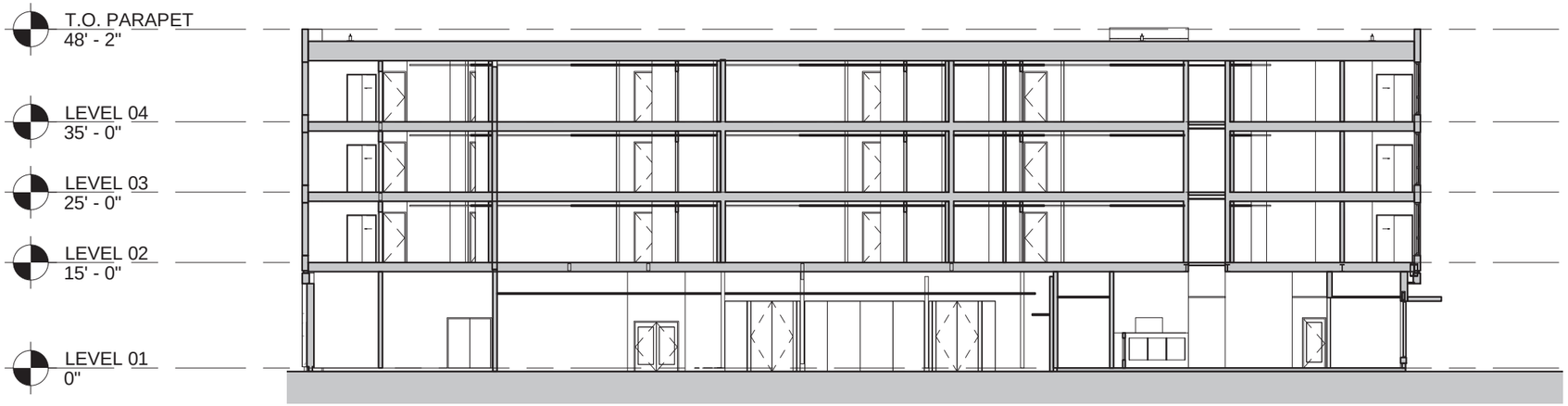

N/S SECTION
1" = 20'-0"

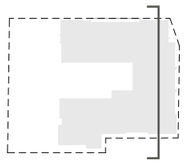

SCALE: 1" = 20' - 0"

0' 10' 20' 40'

© 2023 HOLST ARCHITECTURE INC.

E/W SECTION
1" = 20'-0"

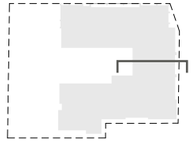

E/W SECTION
1" = 20'-0"

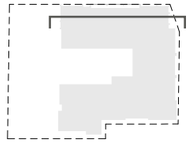

SCALE: 1" = 20' - 0"

0' 10' 20' 40'

HOLST

© 2023 HOLST ARCHITECTURE INC.

STRONG PROPERTY
4931-4947 N WILLIAMS AVE
PORTLAND, OR 97217

DESIGN REVIEW
11.15.2023

title : BUILDING SECTIONS

LU NO. LU 23-103655 DZ
Exhibit A6

sheet : C.15

② ENLARGED ELEVATION AT MAIN ENTRY
Scale 1" = 10'-0"

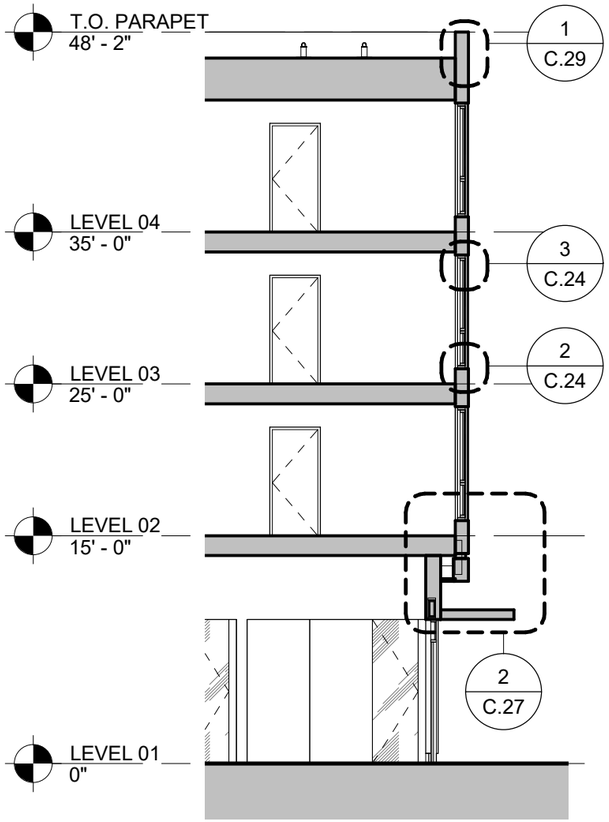

③ WALL SECTION AT MAIN ENTRY
Scale 1" = 10'-0"

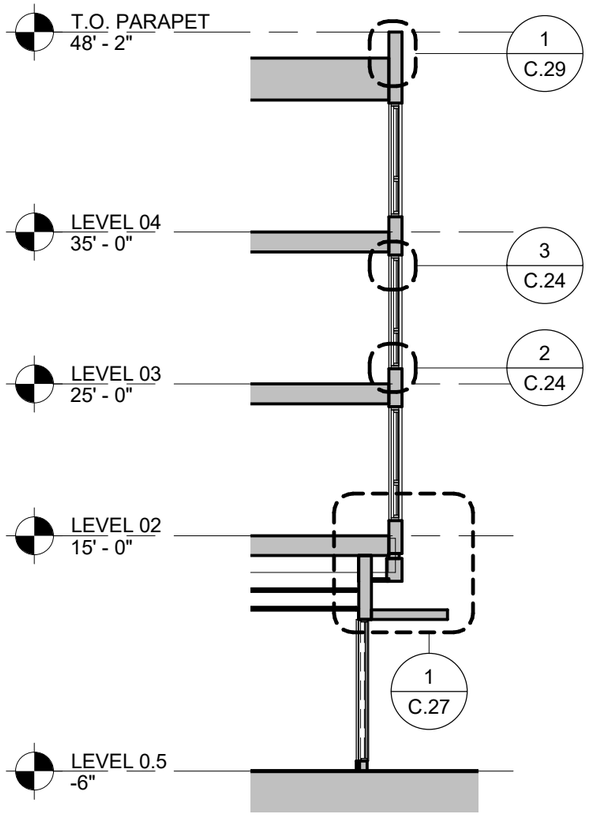

④ WALL SECTION AT MAIN ENTRY
Scale 1" = 10'-0"

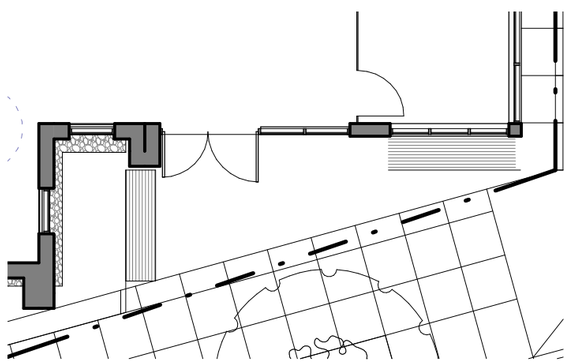

① ENLARGED PLAN AT MAIN ENTRY
Scale 1" = 10'-0"

© 2023 HOLST ARCHITECTURE INC.

STRONG PROPERTY
4931-4947 N WILLIAMS AVE
PORTLAND, OR 97217

DESIGN REVIEW
11.15.2023

title : ENLARGED MAIN ENTRY

LU NO.
LU 23-103655 DZ
Exhibit A6

sheet : C.16

② ENLARGED ELEVATION AT COMMUNITY ROOM
Scale 1" = 10'-0"

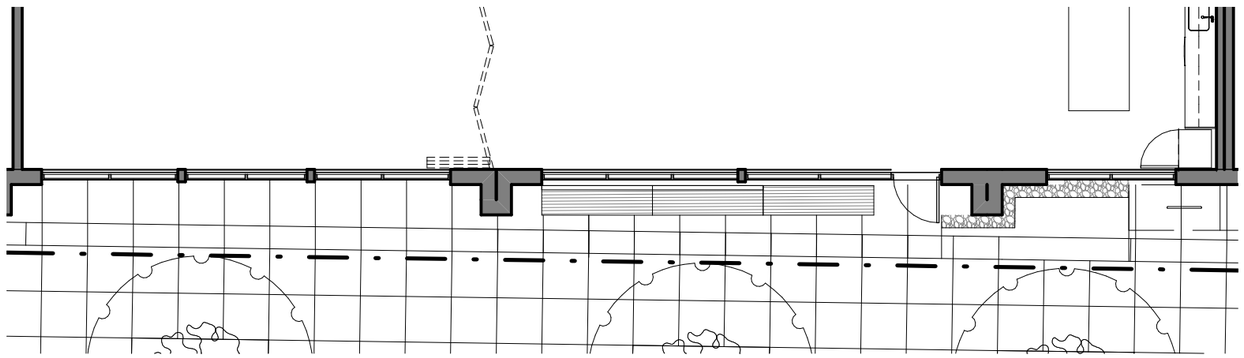

① ENLARGED PLAN AT COMMUNITY ROOM
Scale 1" = 10'-0"

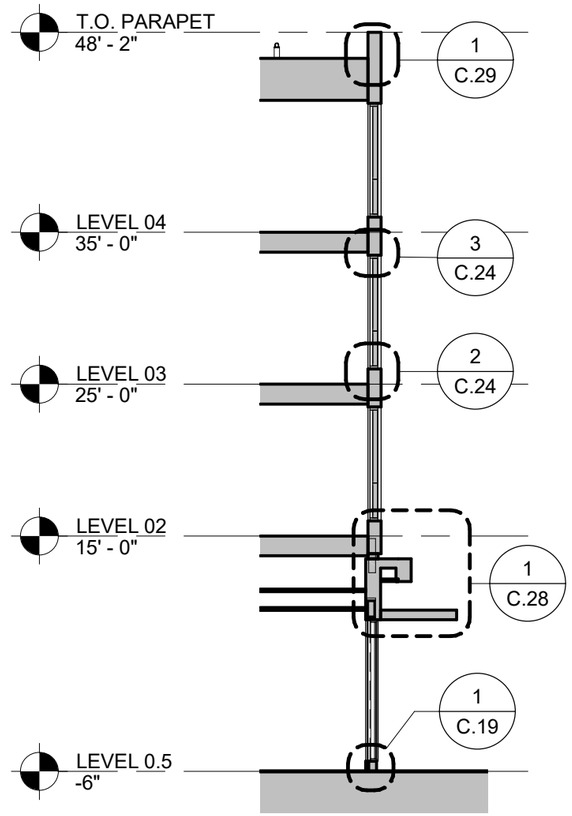

③ WALL SECTION AT COMMUNITY ROOM
Scale 1" = 10'-0"

© 2023 HOLST ARCHITECTURE INC.

HOLST

STRONG PROPERTY
4931-4947 N WILLIAMS AVE
PORTLAND, OR 97217

DESIGN REVIEW
11.15.2023

title : ENLARGED MAIN ENTRY

LU NO. LU 23-103655 DZ
Exhibit A6

sheet : C.17

② ENLARGED ELEVATION AT ALBERTA UNITS
Scale 1" = 10'-0"

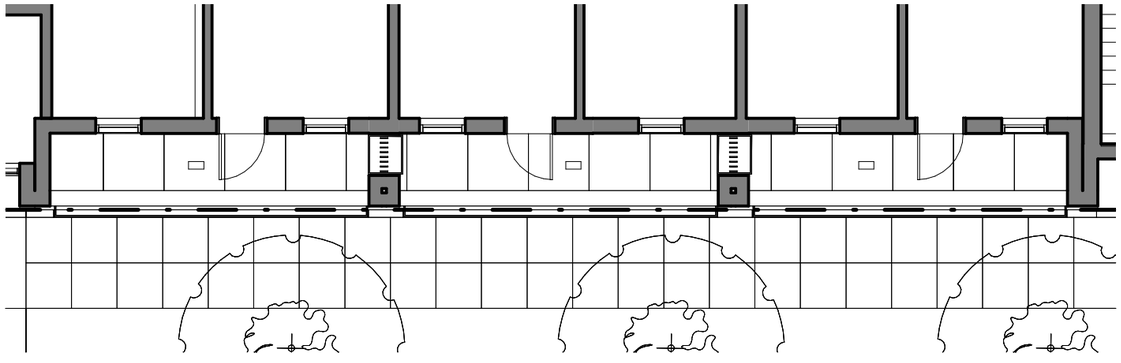

① ENLARGED PLAN AT ALBERTA UNITS
Scale 1" = 10'-0"

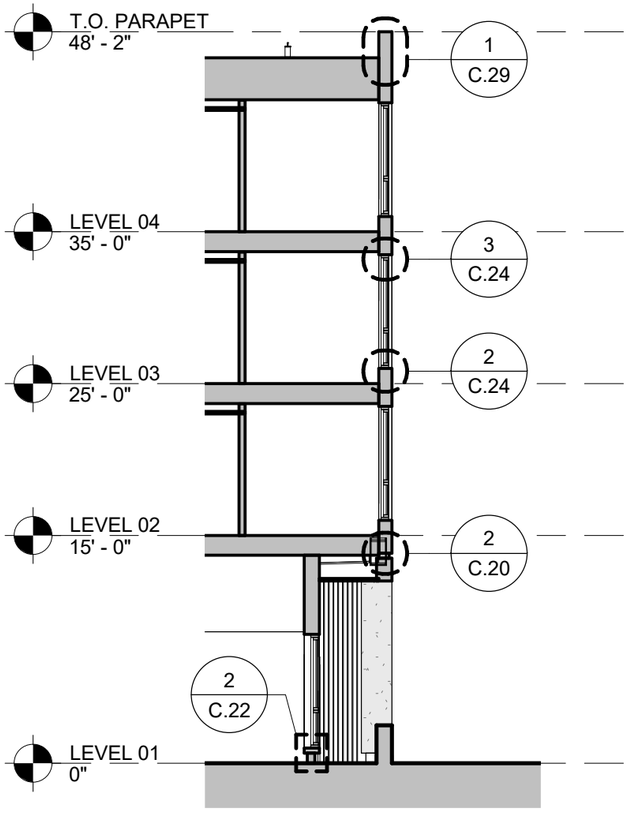

③ WALL SECTION AT ALBERTA UNITS
Scale 1" = 10'-0"

HOLST

© 2023 HOLST ARCHITECTURE INC.

STRONG PROPERTY
4931-4947 N WILLIAMS AVE
PORTLAND, OR 97217

DESIGN REVIEW
11.15.2023

title : ENLARGED MAIN ENTRY

LU NO. LU 23-103655 DZ
Exhibit A6

sheet : C.18

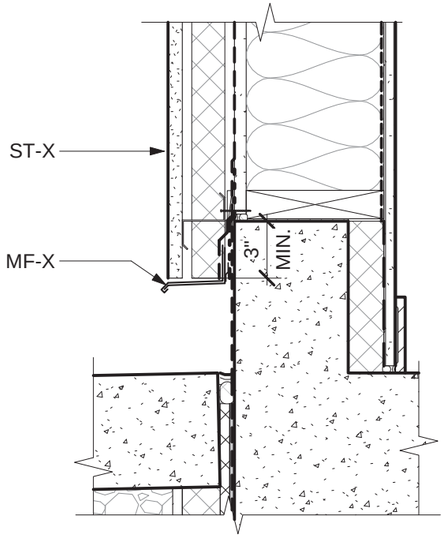

② WALL BASE DETAIL AT ST-X
Scale 1 1/2" = 1'-0"

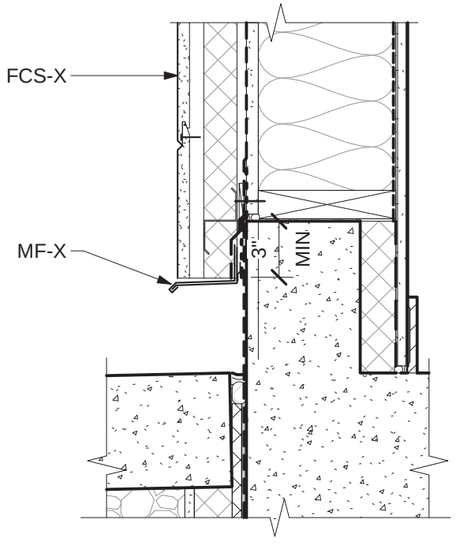

④ WALL BASE DETAIL AT FCS-X
Scale 1 1/2" = 1'-0"

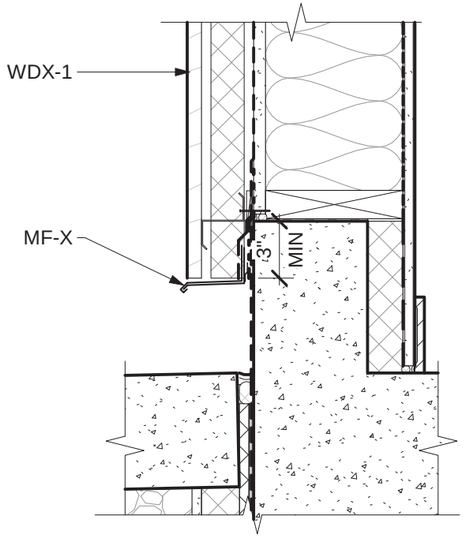

⑤ WALL BASE DETAIL AT WDX-1
Scale 1 1/2" = 1'-0"

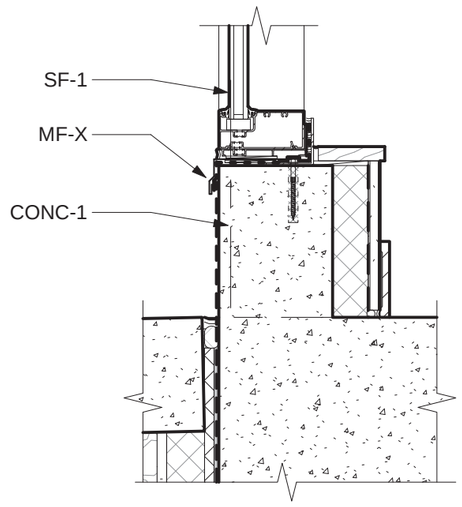

① WALL BASE DETAIL AT SF-X
Scale 1 1/2" = 1'-0"

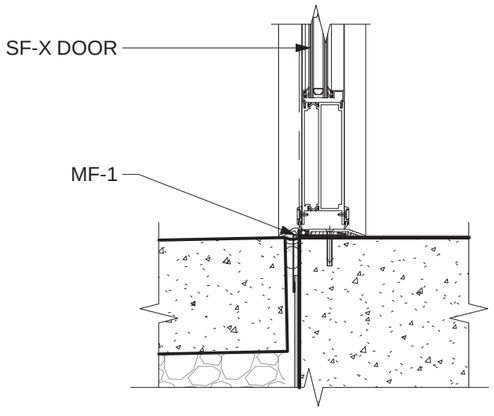

③ SF-X DOOR SILL DETAIL
Scale 1 1/2" = 1'-0"

HOLST

© 2023 HOLST ARCHITECTURE INC.

STRONG PROPERTY
4931-4947 N WILLIAMS AVE
PORTLAND, OR 97217

DESIGN REVIEW
11.15.2023

title : DETAILS

LU NO. LU 23-103655 DZ
Exhibit A6

sheet : C.19

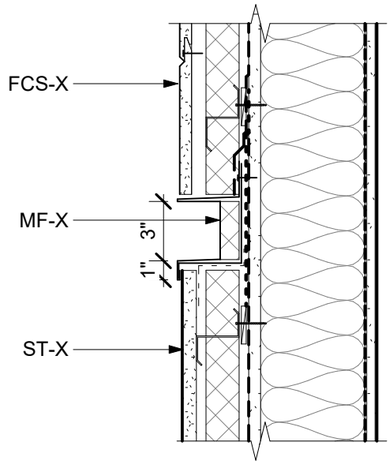

② MF-X HORZ. REVEAL FCS TO ST-X
Scale 1 1/2" = 1'-0"

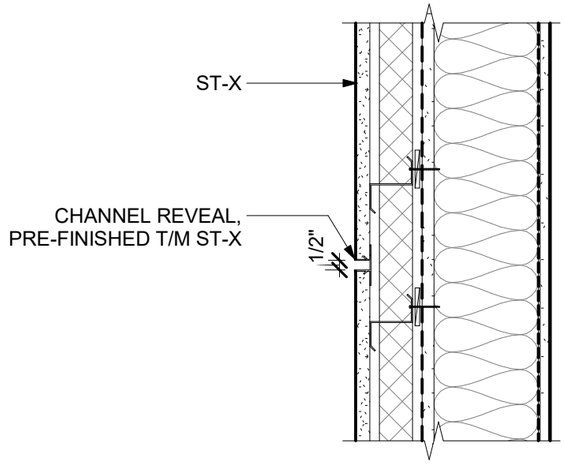

④ HORZ. JOINT ST-X TO ST-X
Scale 1 1/2" = 1'-0"

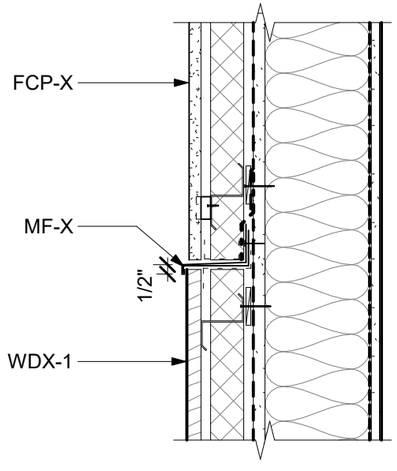

⑤ HORZ. TRANSITION FCP TO WDX
Scale 1 1/2" = 1'-0"

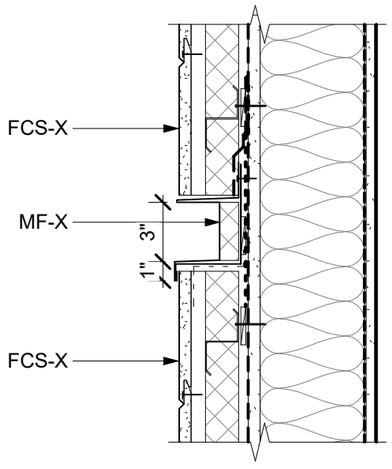

① MF-X HORZ. REVEAL FCS TO FCS
Scale 1 1/2" = 1'-0"

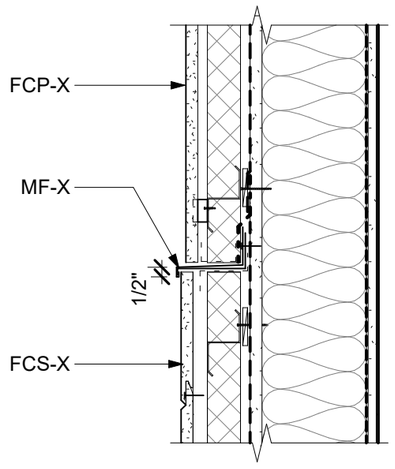

③ HORZ. TRANSITION FCS TO FCP
Scale 1 1/2" = 1'-0"

HOLST

© 2023 HOLST ARCHITECTURE INC.

STRONG PROPERTY
4931-4947 N WILLIAMS AVE
PORTLAND, OR 97217

DESIGN REVIEW
11.15.2023

title : DETAILS

LU NO. LU 23-103655 DZ
Exhibit A6

sheet : C.20

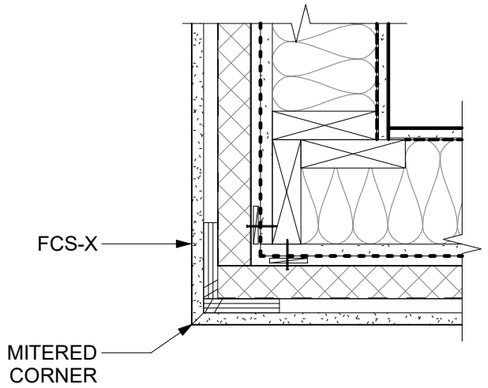

3 OUTSIDE CORNER FCS TO FCS
Scale 1 1/2" = 1'-0"

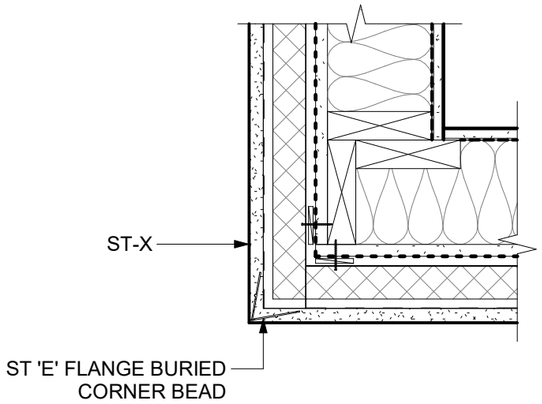

6 OUTSIDE CORNER ST-X TO ST-X
Scale 1 1/2" = 1'-0"

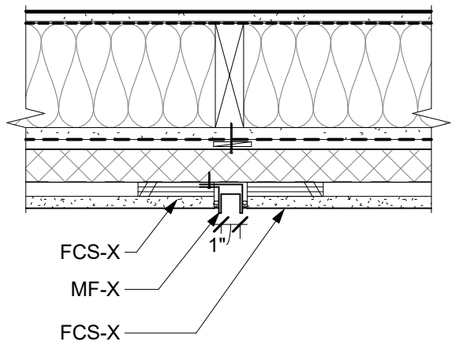

2 MF-X VERT. TRANSITION FCS TO FCS
Scale 1 1/2" = 1'-0"

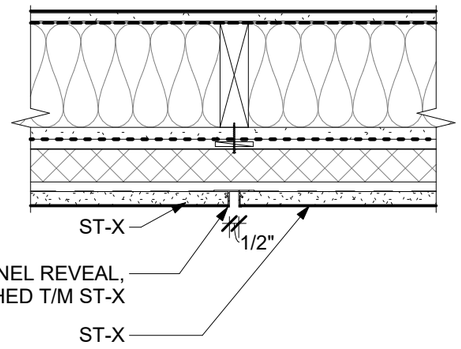

5 VERT. JOINT ST-X TO ST-X
Scale 1 1/2" = 1'-0"

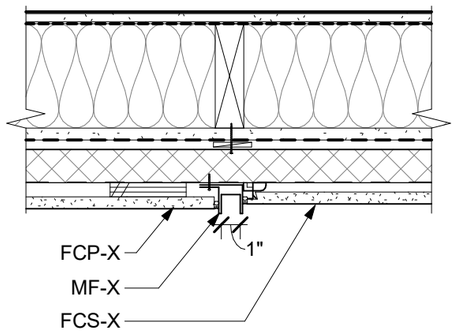

7 MF-X VERT. TRANSITION FCP TO FCS
Scale 1 1/2" = 1'-0"

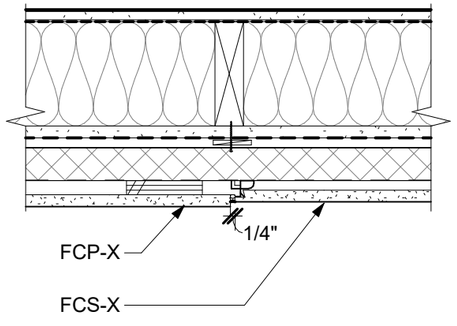

1 VERT. TRANSITION FCP TO FCS
Scale 1 1/2" = 1'-0"

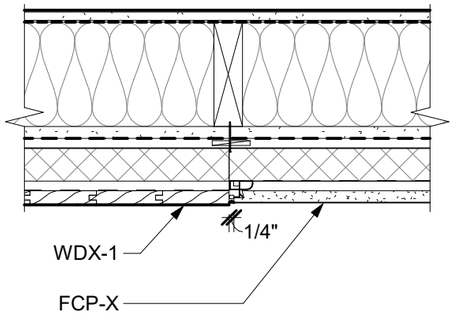

4 VERT. TRANSITION WDX TO FCP
Scale 1 1/2" = 1'-0"

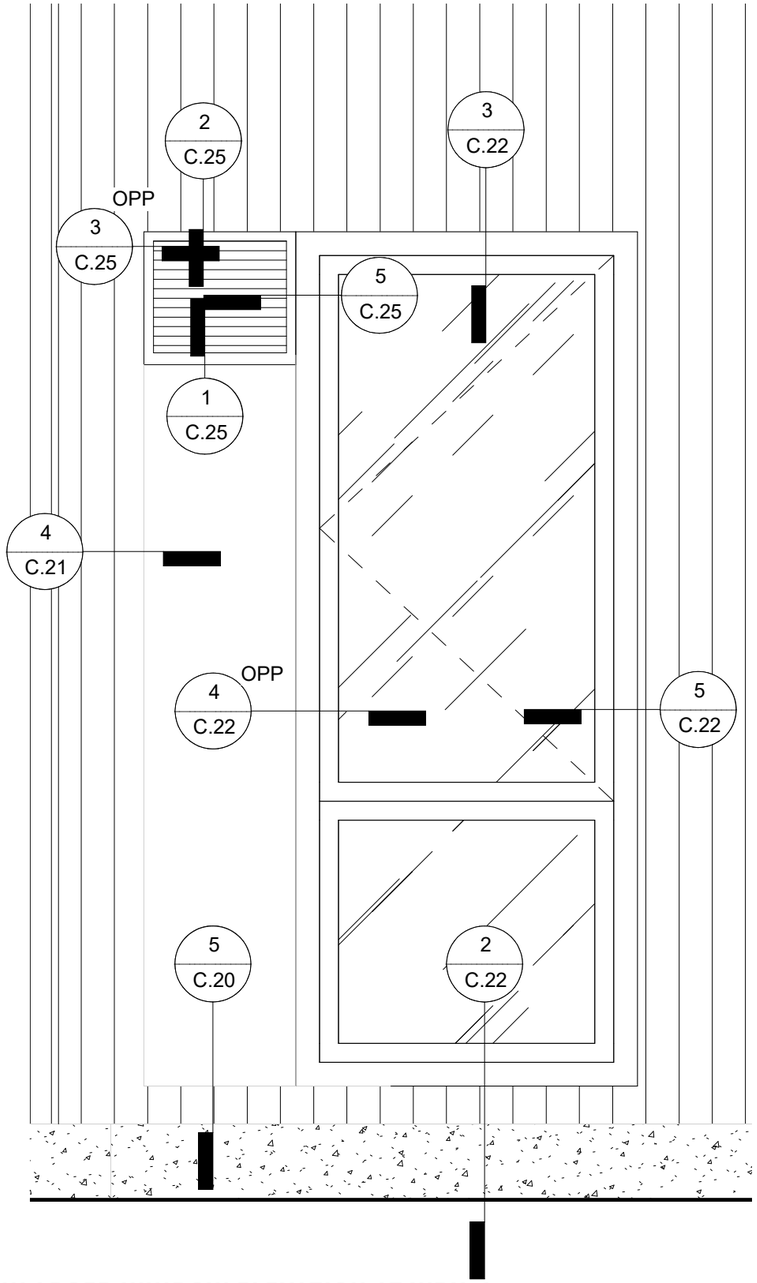

1 ENLARGED WINDOW ELEVATION AT WDX-1
Scale 3/4" = 1'-0"

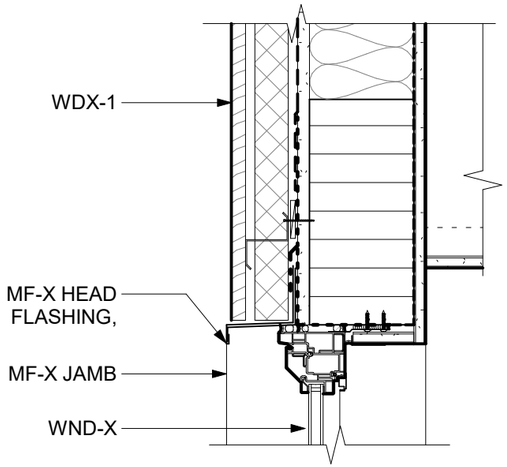

3 WINDOW HEAD AT WDX-1
Scale 1 1/2" = 1'-0"

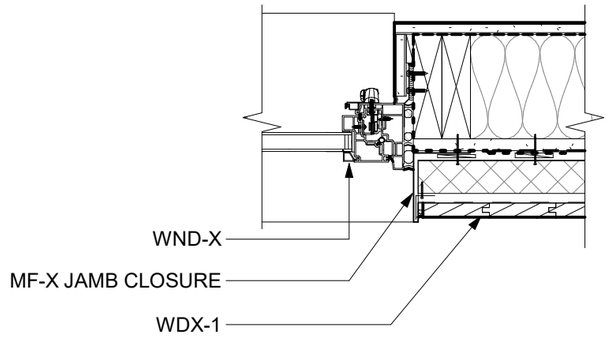

5 WINDOW JAMB AT WDX-1
Scale 1 1/2" = 1'-0"

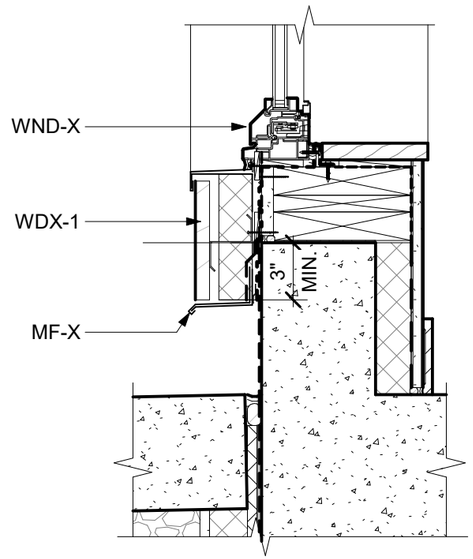

2 WINDOW SILL AT WDX-1
Scale 1 1/2" = 1'-0"

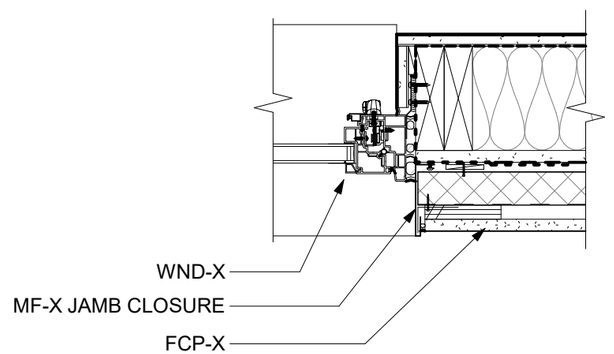

4 WINDOW JAMB AT FCP-X
Scale 1 1/2" = 1'-0"

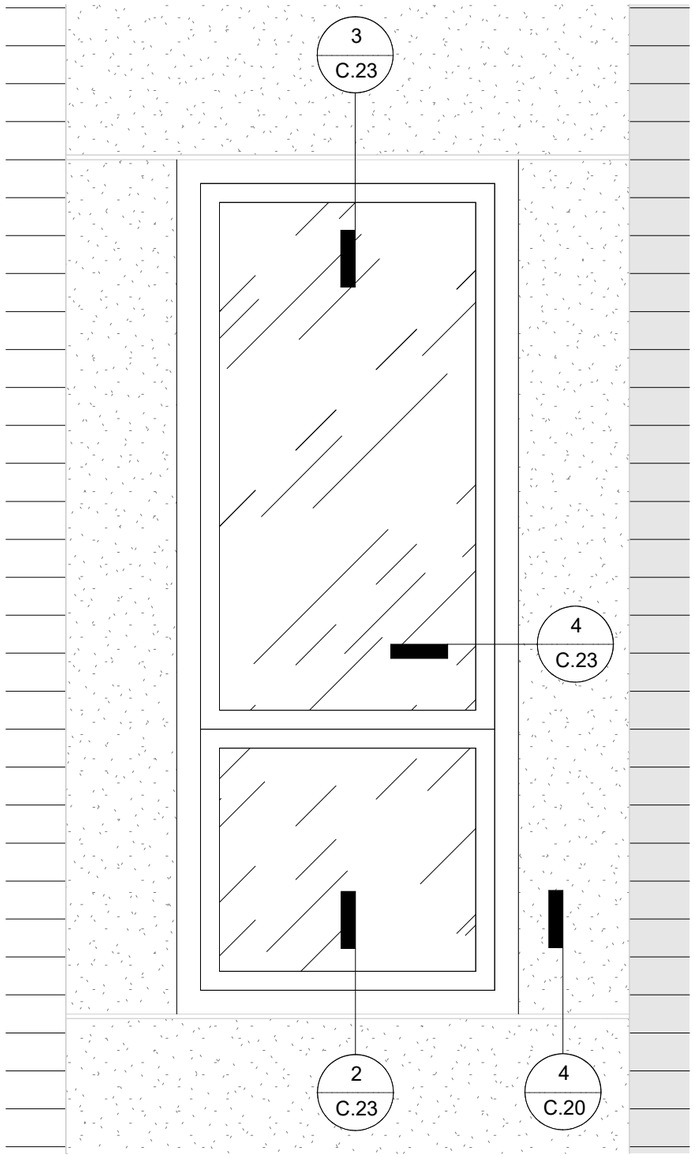

1 ENLARGED WINDOW ELEVATION AT ST-X
Scale 3/4" = 1'-0"

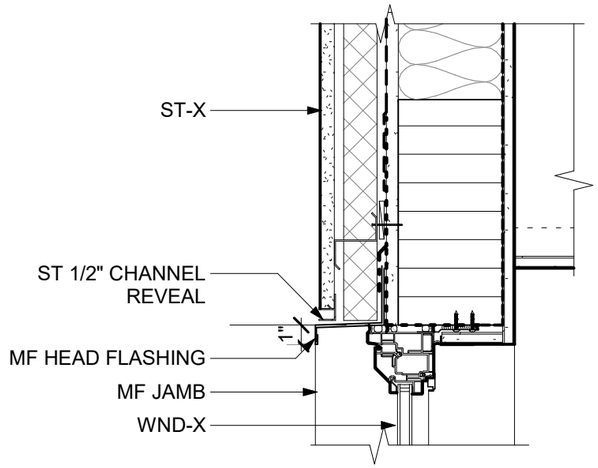

3 WINDOW HEAD AT ST-X
Scale 1 1/2" = 1'-0"

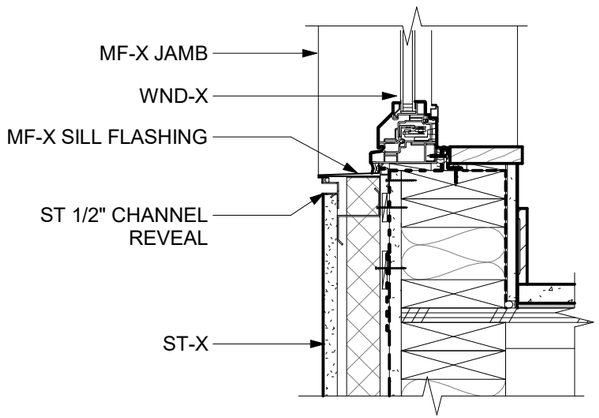

2 WINDOW SILL AT ST-X
Scale 1 1/2" = 1'-0"

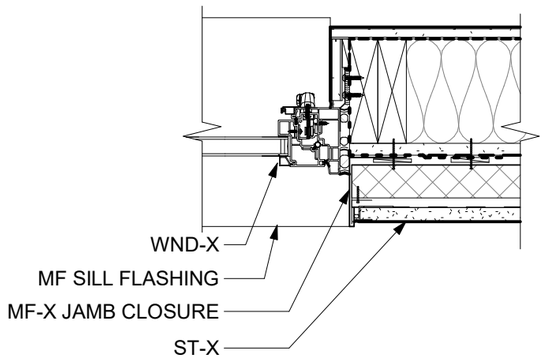

4 WINDOW JAMB AT ST-X
Scale 1 1/2" = 1'-0"

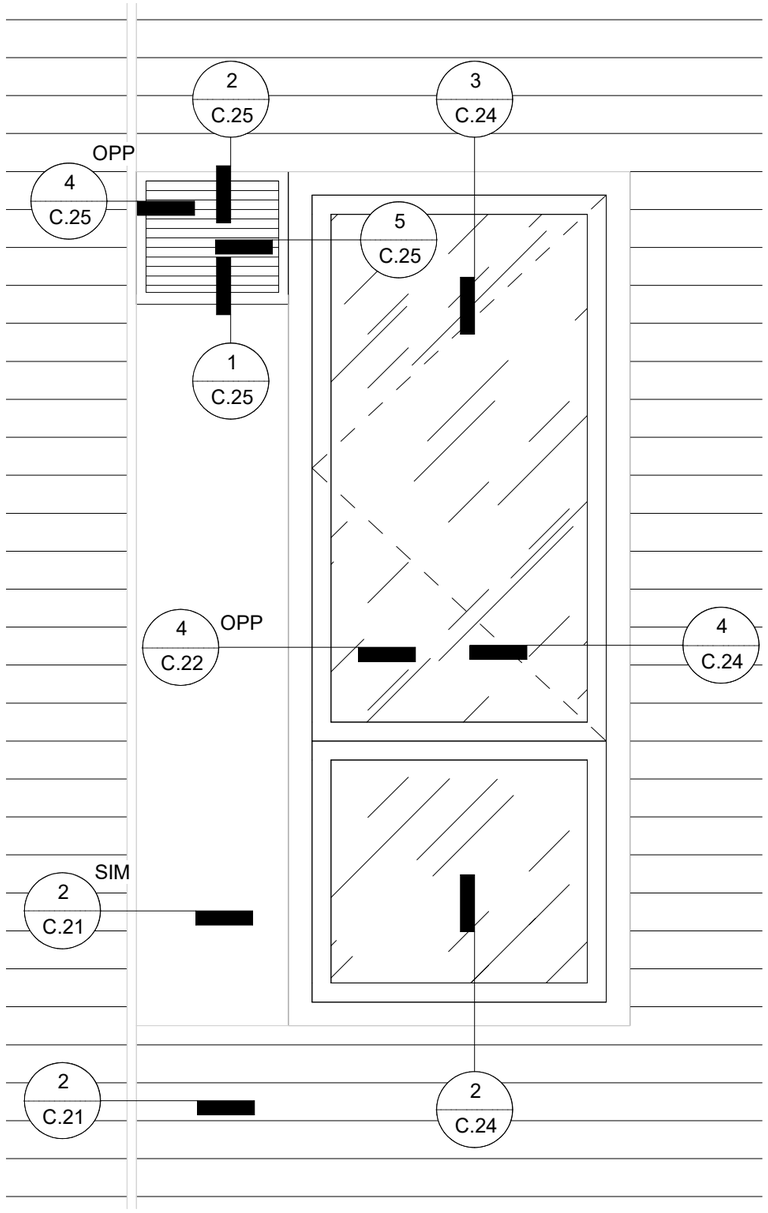

1 ENLARGED WINDOW ELEVATION AT FCS-X
Scale 3/4" = 1'-0"

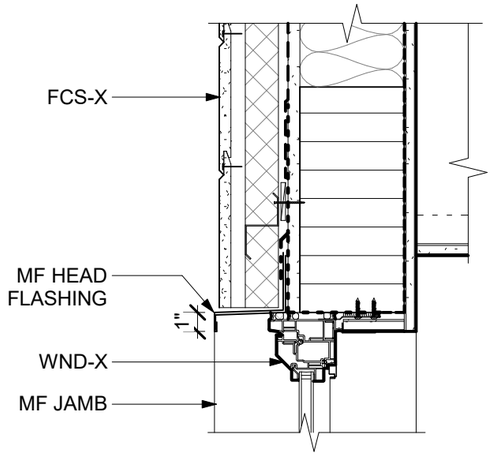

3 WINDOW HEAD AT FCS-X
Scale 1 1/2" = 1'-0"

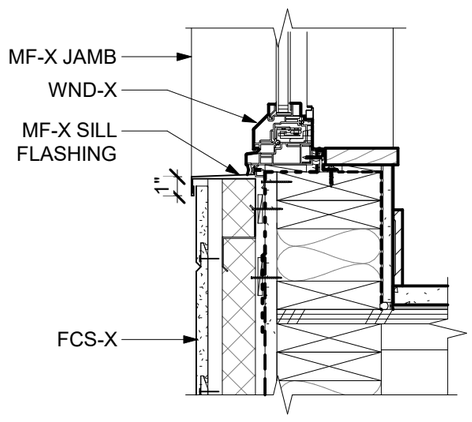

2 WINDOW SILL AT FCS-X
Scale 1 1/2" = 1'-0"

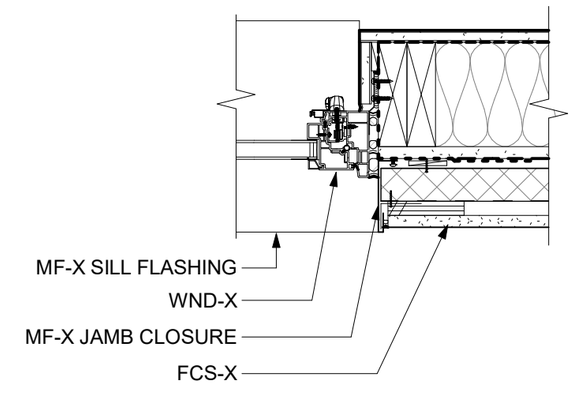

4 WINDOW JAMB AT FCS-X
Scale 1 1/2" = 1'-0"

© 2023 HOLST ARCHITECTURE INC.

HOLST

STRONG PROPERTY
4931-4947 N WILLIAMS AVE
PORTLAND, OR 97217

DESIGN REVIEW
11.15.2023

title : DETAILS

LU NO. LU 23-103655 DZ
Exhibit A6

sheet : C.24

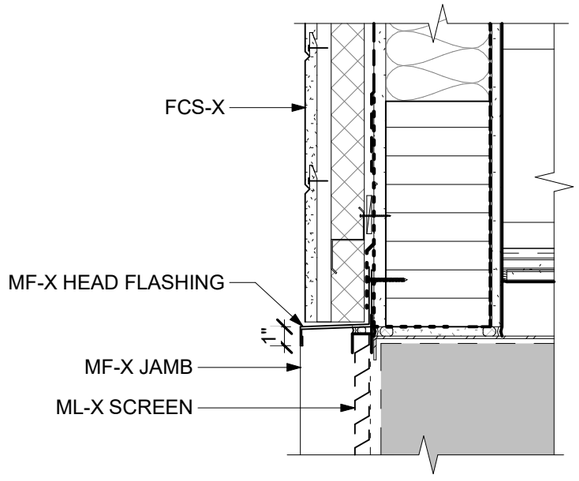

② LOUVER HEAD AT FCS-X
Scale 1 1/2" = 1'-0"

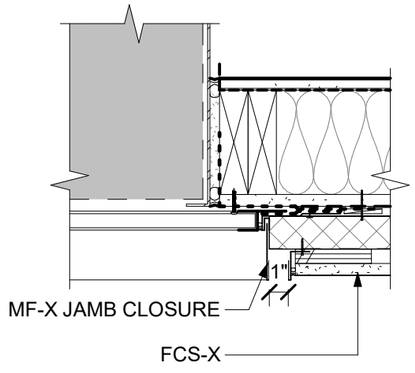

④ LOUVER JAMB AT REVEAL AT FCS-X
Scale 1 1/2" = 1'-0"

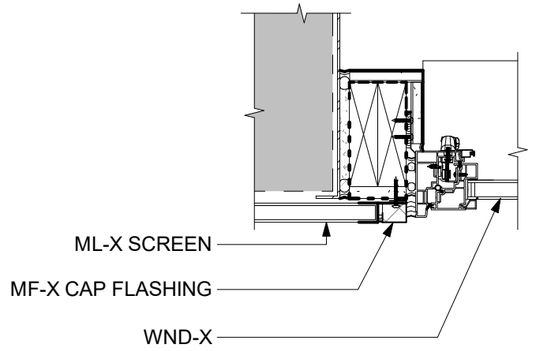

⑤ LOUVER JAMB AT WND-X
Scale 1 1/2" = 1'-0"

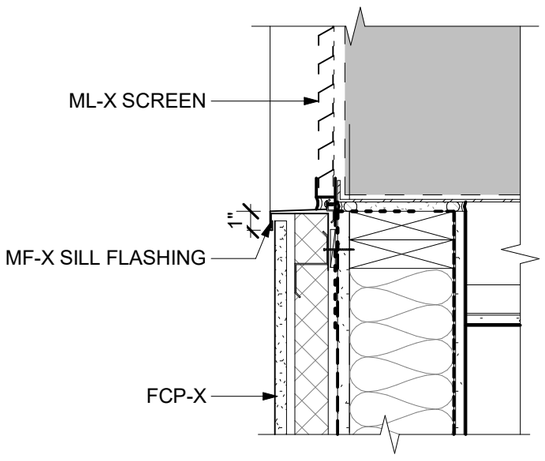

① LOUVER SILL AT FCP-X
Scale 1 1/2" = 1'-0"

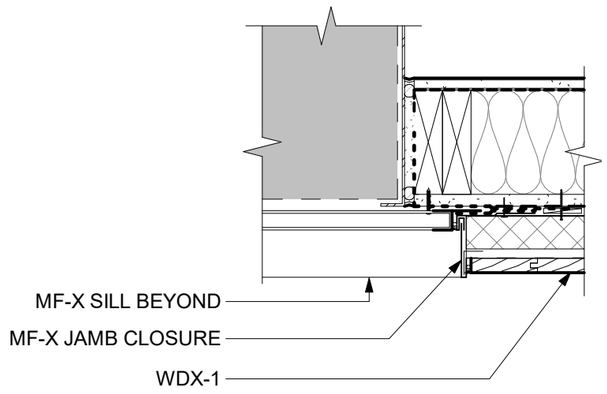

③ LOUVER JAMB AT WDX
Scale 1 1/2" = 1'-0"

HOLST
© 2023 HOLST ARCHITECTURE INC.

STRONG PROPERTY
4931-4947 N WILLIAMS AVE
PORTLAND, OR 97217

DESIGN REVIEW
11.15.2023

title : DETAILS | LU NO. LU 23-103655 DZ Exhibit A6 | sheet : C.25

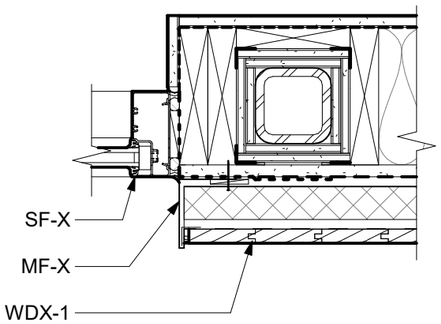

3 SF-X JAMB AT WDX
Scale 1 1/2" = 1'-0"

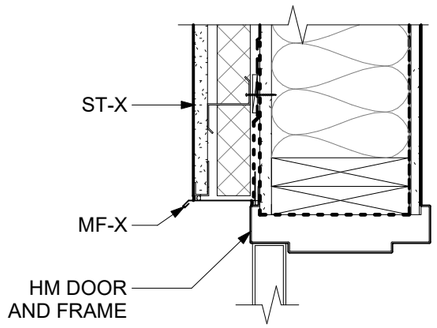

6 HM HEADER AT ST-X
Scale 1 1/2" = 1'-0"

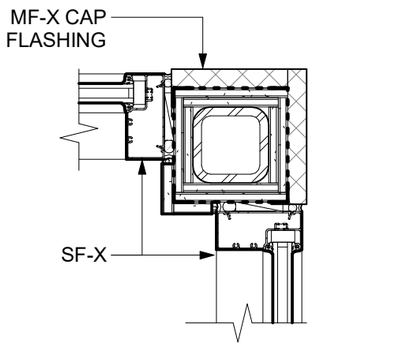

2 SF-X TO SF-X AT CORNER COLUMN
Scale 1 1/2" = 1'-0"

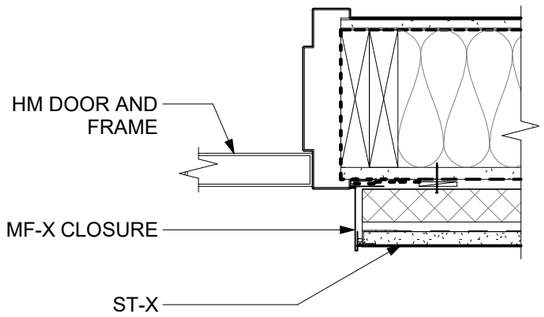

5 HM JAMB AT ST-X
Scale 1 1/2" = 1'-0"

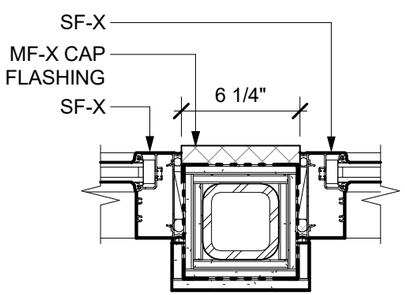

1 SF-X TO SF-X AT COLUMN
Scale 1 1/2" = 1'-0"

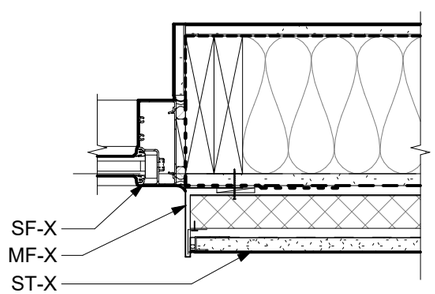

4 SF-X JAMB AT ST-X
Scale 1 1/2" = 1'-0"

HOLST

© 2023 HOLST ARCHITECTURE INC.

STRONG PROPERTY
4931-4947 N WILLIAMS AVE
PORTLAND, OR 97217

DESIGN REVIEW
11.15.2023

title : DETAILS

LU NO. LU 23-103655 DZ
Exhibit A6

sheet : C.26

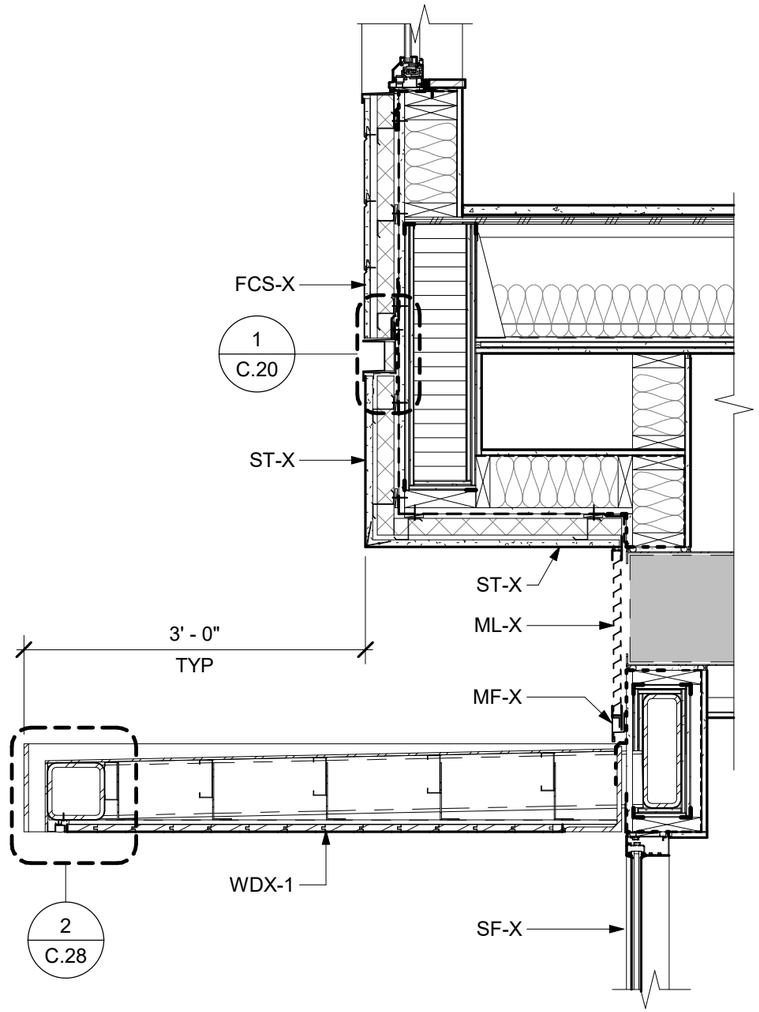

1 CANOPY AT LOUVER
Scale 3/4" = 1'-0"

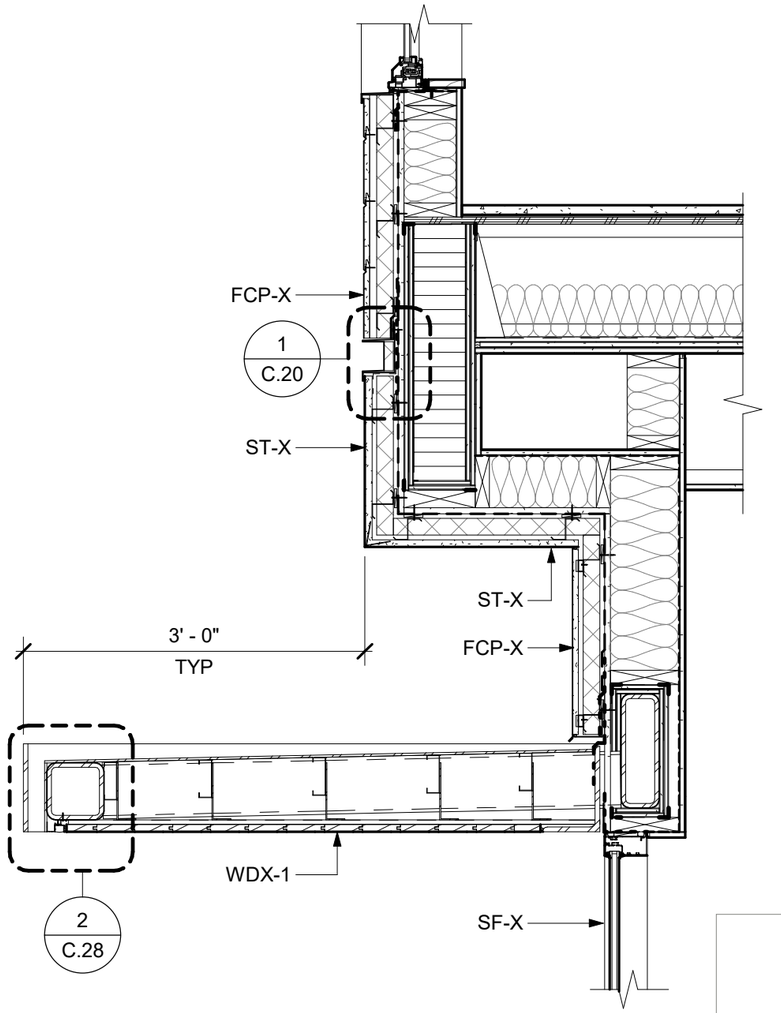

2 CANOPY AT FCP-X
Scale 3/4" = 1'-0"

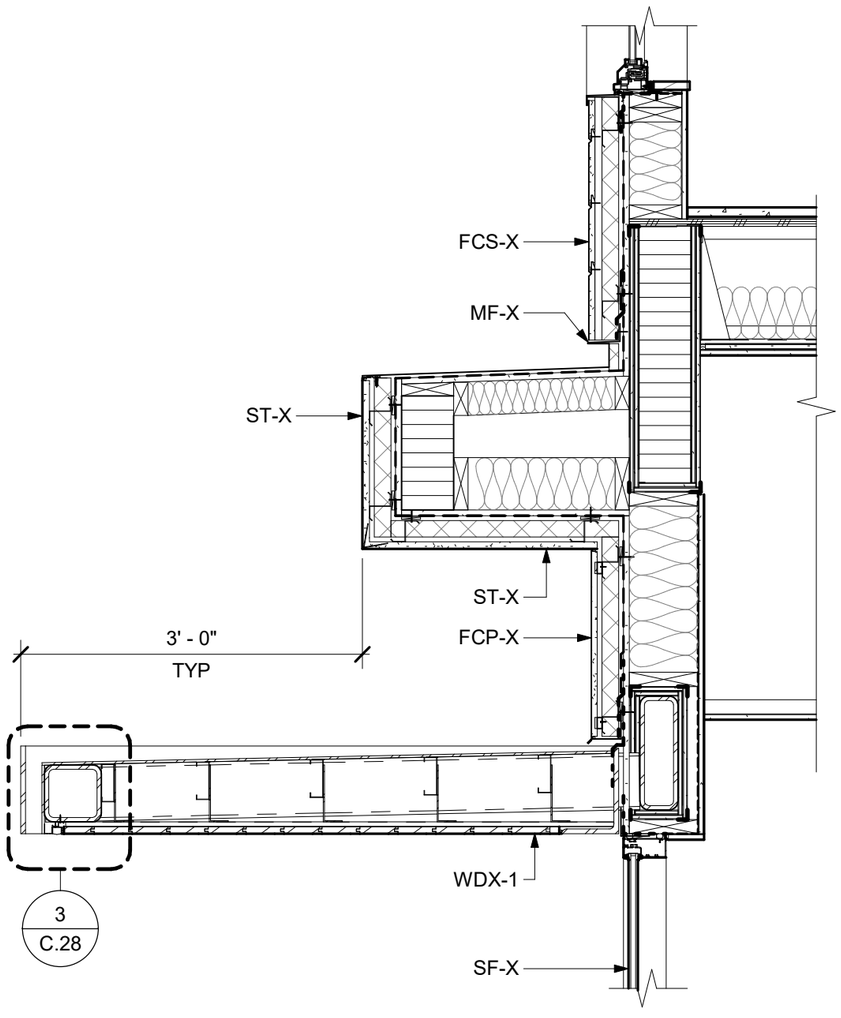

1 CANOPY AT RECESSED LEVEL 2-4
Scale 1 1/2" = 1'-0"

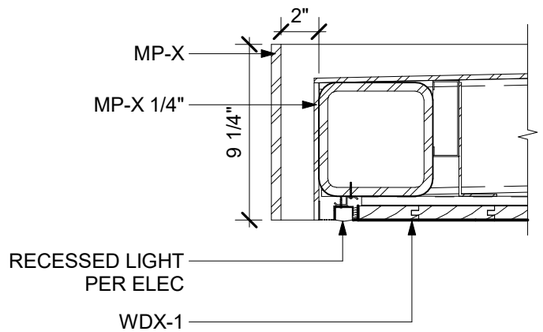

2 TYP. CANOPY EDGE
Scale 1 1/2" = 1'-0"

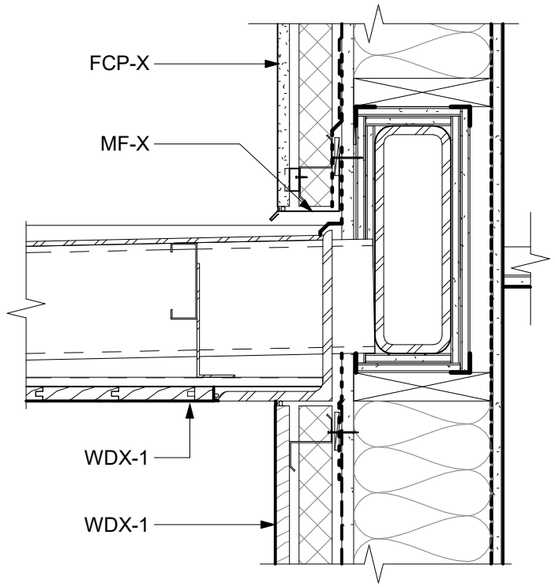

3 CANOPY AT WDX-1
Scale 1 1/2" = 1'-0"

© 2023 HOLST ARCHITECTURE INC.

HOLST

STRONG PROPERTY
4931-4947 N WILLIAMS AVE
PORTLAND, OR 97217

DESIGN REVIEW
11.15.2023

title : DETAILS

LU NO.
LU 23-103655 DZ
Exhibit A6

sheet : C.28

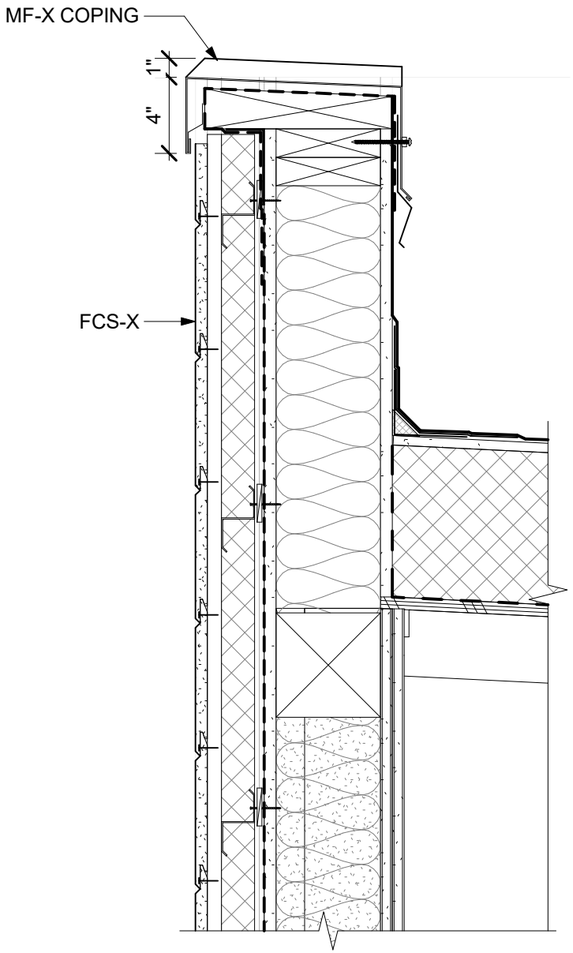

① **PARAPET AT FCS-X**
Scale 1 1/2" = 1'-0"

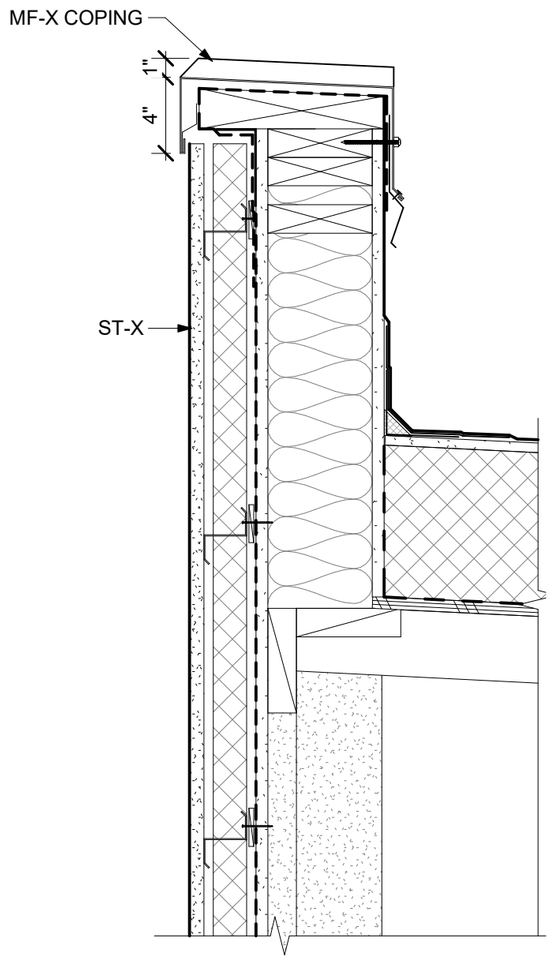

② **PARAPET AT ST-X**
Scale 1 1/2" = 1'-0"

HOLST
© 2023 HOLST ARCHITECTURE INC.

STRONG PROPERTY
4931-4947 N WILLIAMS AVE
PORTLAND, OR 97217

DESIGN REVIEW
11.15.2023

title : DETAILS

LU NO. LU 23-103655 DZ
Exhibit A6

sheet : C.29

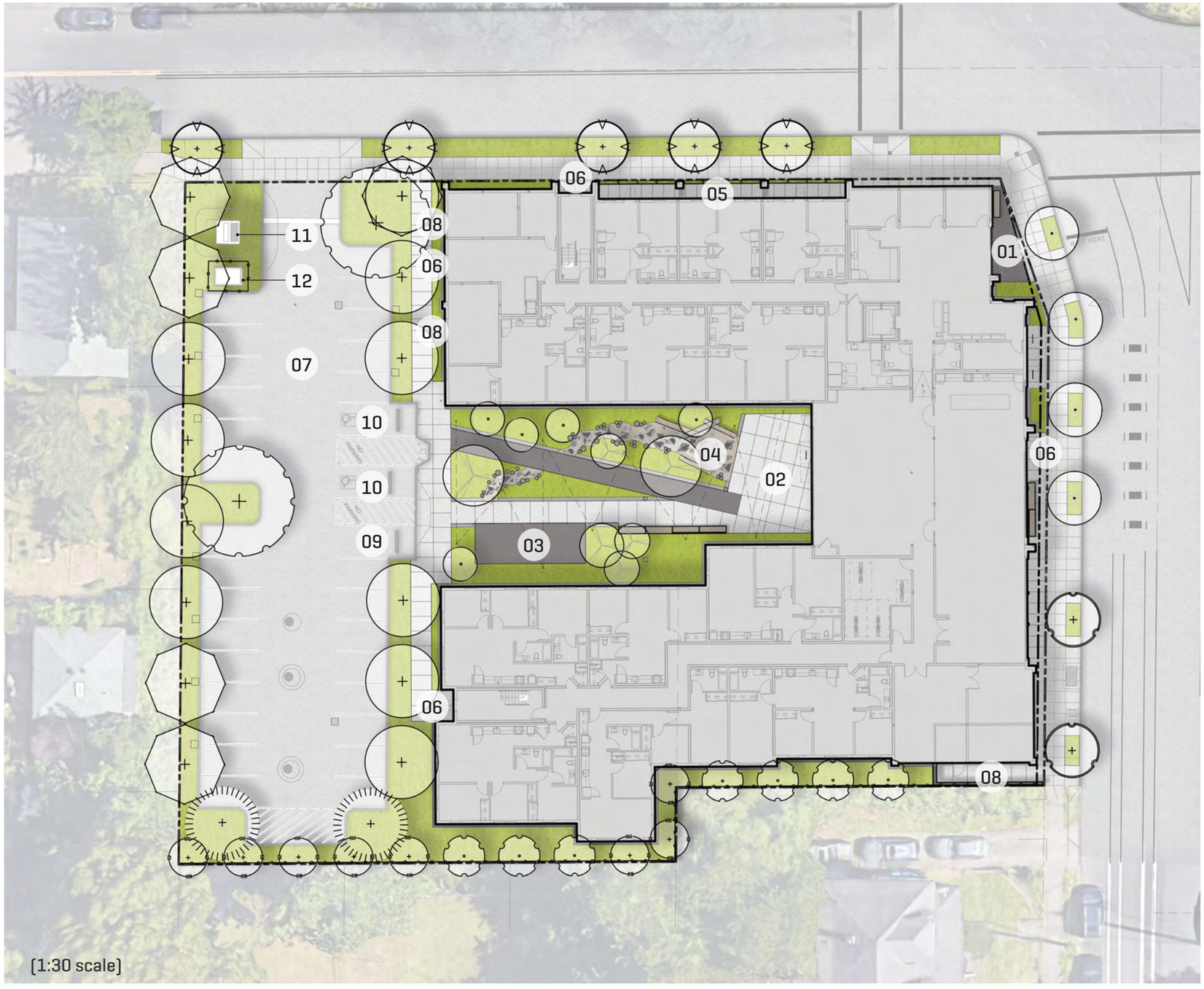

LEGEND

01	Main Entry Plaza
02	Couryard Terrace (furnishings by owner)
03	Gathering Terrace (furnishings by owner)
04	Nature Play Area
05	Private Patios
06	Building Entry
07	Parking Area
08	Utility Entry
09	Loading Space
10	Accessible Parking
11	Transformer
12	Battery Energy Storage System

© 2023 HOLST ARCHITECTURE INC.

HOLST

STRONG PROPERTY
4931-4947 N WILLIAMS AVE
PORTLAND, OR 97217

GROUNDWORKSHOP

DESIGN REVIEW
11.15.2023

title : LANDSCAPE PLAN

LU NO. LU 23-103655 DZ
Exhibit A6

sheet : C.30

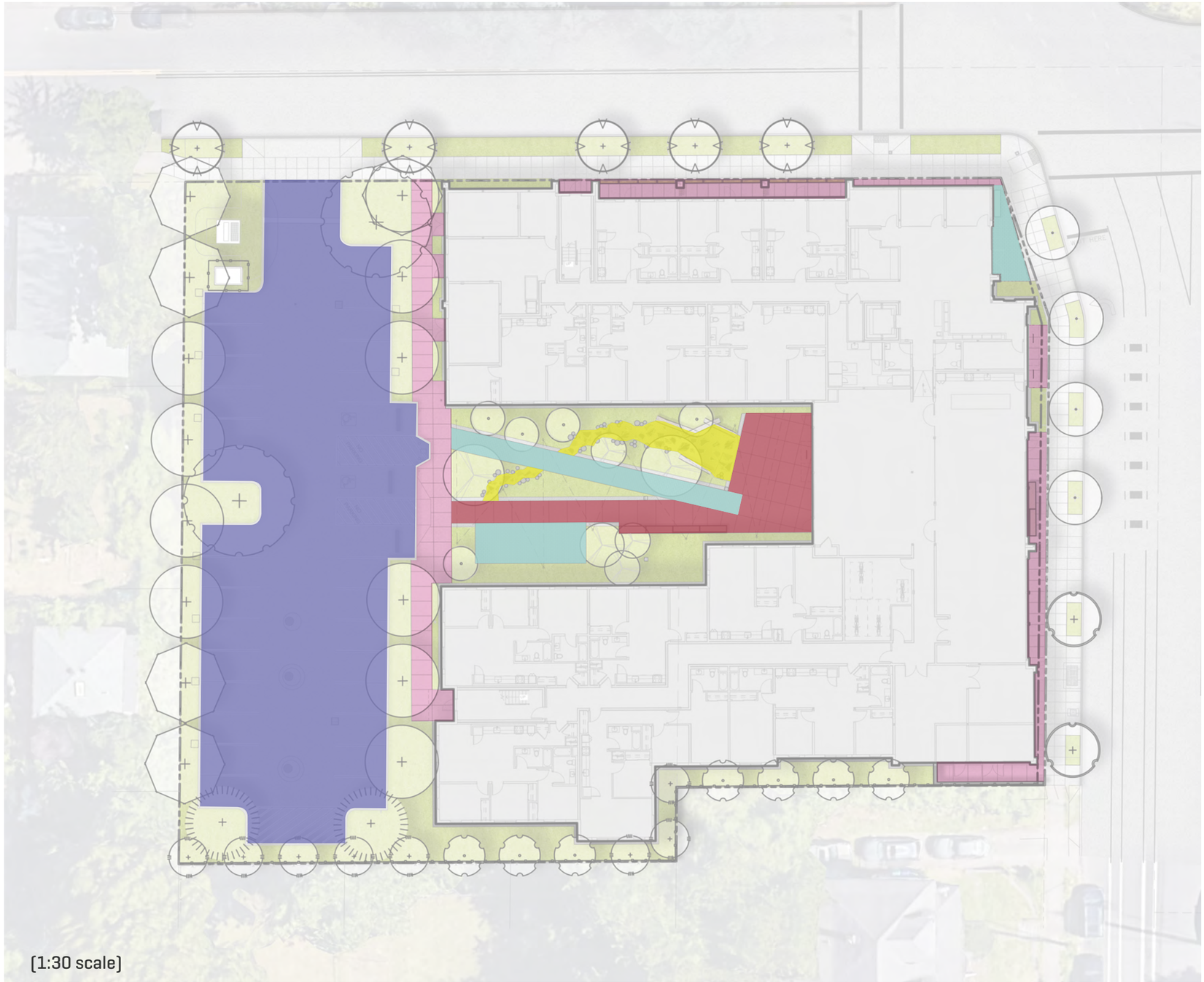

(1:30 scale)

MATERIAL 1

Concrete Paving Type I
Standard color, broom finish

MATERIAL 2

Concrete Paving Type 2
Sand etch finish

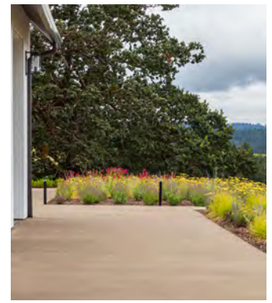

MATERIAL 3

Concrete Unit Paving
Concrete Unit Pavers

MATERIAL 4

Stabilized Crushed Stone
1/4 - basalt W/ steppers

MATERIAL 5

Asphalt
Standard

© 2023 HOLST ARCHITECTURE INC.

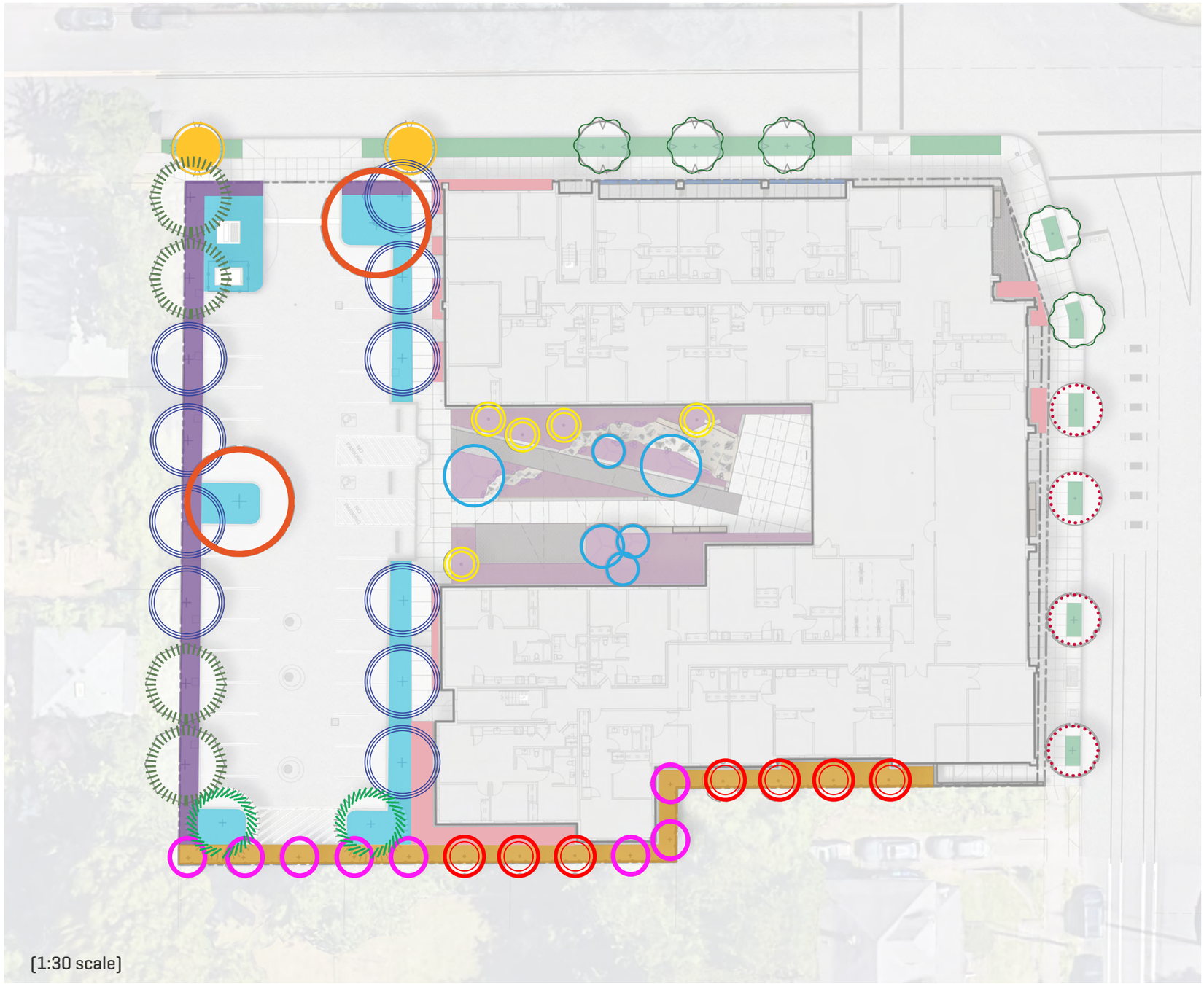

Planting Typologies

- L2 SCREENING
- L3 SCREENING
- RIGHT OF WAY PLANTING
- P1 LANDSCAPING
- PLANTING TYPE 1
- PLANTING TYPE 2
- PLANTING TYPE 3

Street Trees

- Cladrastis kentuckea (American Yellowwood)
- Styphnolobium japonicum (Japanese pagoda tree)
- Parrotia persica (Persian Ironwood)

On-Site Trees

- Liriodendron tulipifera (Tulip Poplar)
- Pseudotsuga menziesii (Douglas Fir)
- Calocedrus decurrens (Incense Cedar)
- Nyssa sylvatica (Black Tupelo)
- Populus tremuloides (Quaking Aspen)
- Amelanchier x grandiflora (Autumn Brilliance Serviceberry)
- Acer rubrum ‘bowhall’ (Bowhall Red Maple)
- Magnolia stellata (Star Magnolia)

HOLST

© 2023 HOLST ARCHITECTURE INC.

STRONG PROPERTY
4931-4947 N WILLIAMS AVE
PORTLAND, OR 97217

GROUNDWORKSHOP

DESIGN REVIEW
11.15.2023

title : LANDSCAPE PLAN

LU NO. LU 23-103655 DZ
Exhibit A6

sheet : C.32

L3 SCREENING
6' HT. EVERGREEN SHRUBS

Abelia 'Edward Goucher'
(Edward Goucher Abelia)

Arctostaphylos columbiana
(Hairy Manzanita)

Myrica californica
(Pacific Wax Myrtle)

Ceanothus 'Point Reyes'
(Point Reyes Ceanothus)

Liriope spicata
(Creeping Lilyturf)

Arctostaphylos uva-ursi
(Kinnikinnick)

Spiraea betulifolia
(Birchleaf Spiraea)

L2 SCREENING
3' HT. EVERGREEN SHRUBS

Myrica californica
(Pacific Wax Myrtle)

Ilex crenata
(Japanese Holly)

Cistus 'Bennet's White'
(Bennet's White Rockrose)

Liriope spicata
(Creeping Lilyturf)

Ceanothus 'Point Reyes'
(Point Reyes Ceanothus)

Arctostaphylos uva-ursi
(Kinnikinnick)

Spiraea betulifolia
(Birchleaf Spiraea)

HOLST
© 2023 HOLST ARCHITECTURE INC.

STRONG PROPERTY
4931-4947 N WILLIAMS AVE
PORTLAND, OR 97217

GROUNDWORKSHOP

DESIGN REVIEW
11.15.2023

title : LANDSCAPE

LU NO. LU 23-103655 DZ
Exhibit A6

sheet : C.34

P1 INTERIOR
LOW SHRUBS, GRASSES

Liriope spicata
(Creeping Lilyturf)

Arctostaphylos uva-ursi
(Kinnikinnick)

Spiraea betulifolia
(Birchleaf Spiraea)

Rosmarinus officinalis
(Rosemary)

Mahonia repens
(Creeping Oregon Grape)

ROW PLANTING
TREE WELLS

Liriope spicata
(Creeping Lilyturf)

Arctostaphylos uva-ursi
(Kinnikinnick)

PLANTING TYPE 1
COURTYARD PLANTINGS

Ilex crenata
(Japanese Holly)

Sarcococca ruscifolia
(Fragrant Sweetbox)

Polystichum munitum
(Western Sword Fern)

Carex tumulicola
(Berkeley Sedge)

Carex oshimensis ‘Evergold’
(Evergold Japanese Sedge)

Pennisetum spathiolatum
(Veldt Grass)

Epimedium x youngianum
(Nieveum Bishop’s Hat)

Achillea millefolium
(Willamette Gray Yarrow)

Delosperma ‘Jewel of the Desert’
(Jewel of the Desert Ice Plant)

© 2023 HOLST ARCHITECTURE INC.

STRONG PROPERTY
4931-4947 N WILLIAMS AVE
PORTLAND, OR 97217

GROUNDWORKSHOP

DESIGN REVIEW
11.15.2023

title : LANDSCAPE

LU NO. LU 23-103655 DZ
Exhibit A6

PLANTING TYPE 2
FRONTAGE PLANTINGS

Liriope spicata
(Creeping Lilyturf)

Lonicera pileata
(Privet Honeysuckle)

PLANTING TYPE 3 RAISED
PLANTERS

Hakonechloa macra
(Japanese Forest Grass)

Polystichum munitum
(Western Sword Fern)

Liriope spicata
(Creeping Lilyturf)

HOLST
© 2023 HOLST ARCHITECTURE INC.

STRONG PROPERTY
4931-4947 N WILLIAMS AVE
PORTLAND, OR 97217

GROUNDWORKSHOP

DESIGN REVIEW
11.15.2023

title : LANDSCAPE

LU NO. LU 23-103655 DZ
Exhibit A6

TREES

Cladrastis kentuckea
(American Yellowwood)

Styphnolobium japonicum
(Japanese pagoda tree)

Parrotia persica
(Persian Ironwood)

Liriodendron tulipifera
(Tulip Poplar)

Pseudotsuga menziesii
(Douglas Fir)

Calocedrus decurrens
(Incense Cedar)

Nyssa sylvatica
(Black Tupelo)

Populus tremuloides
(Quaking Aspen)

HOLST
© 2023 HOLST ARCHITECTURE INC.

STRONG PROPERTY
4931-4947 N WILLIAMS AVE
PORTLAND, OR 97217

GROUNDWORKSHOP

DESIGN REVIEW
11.15.2023

title : LANDSCAPE

LU NO. LU 23-103655 DZ
Exhibit A6

TREES

Amelanchier x grandiflora
(Autumn Brilliance Serviceberry)

Acer rubrum ‘bowhall’
(Bowhall Red Maple)

Magnolia stellata
(Star Magnolia)

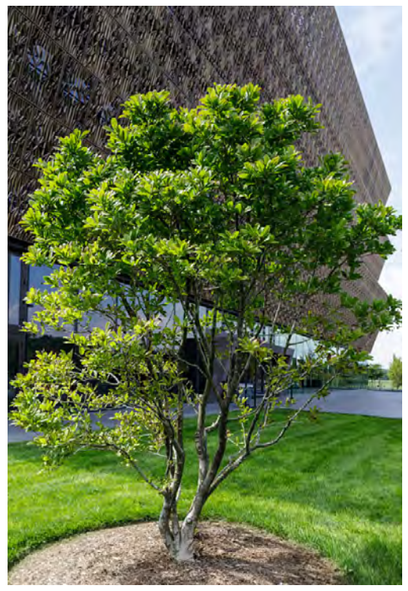

© 2023 HOLST ARCHITECTURE INC.

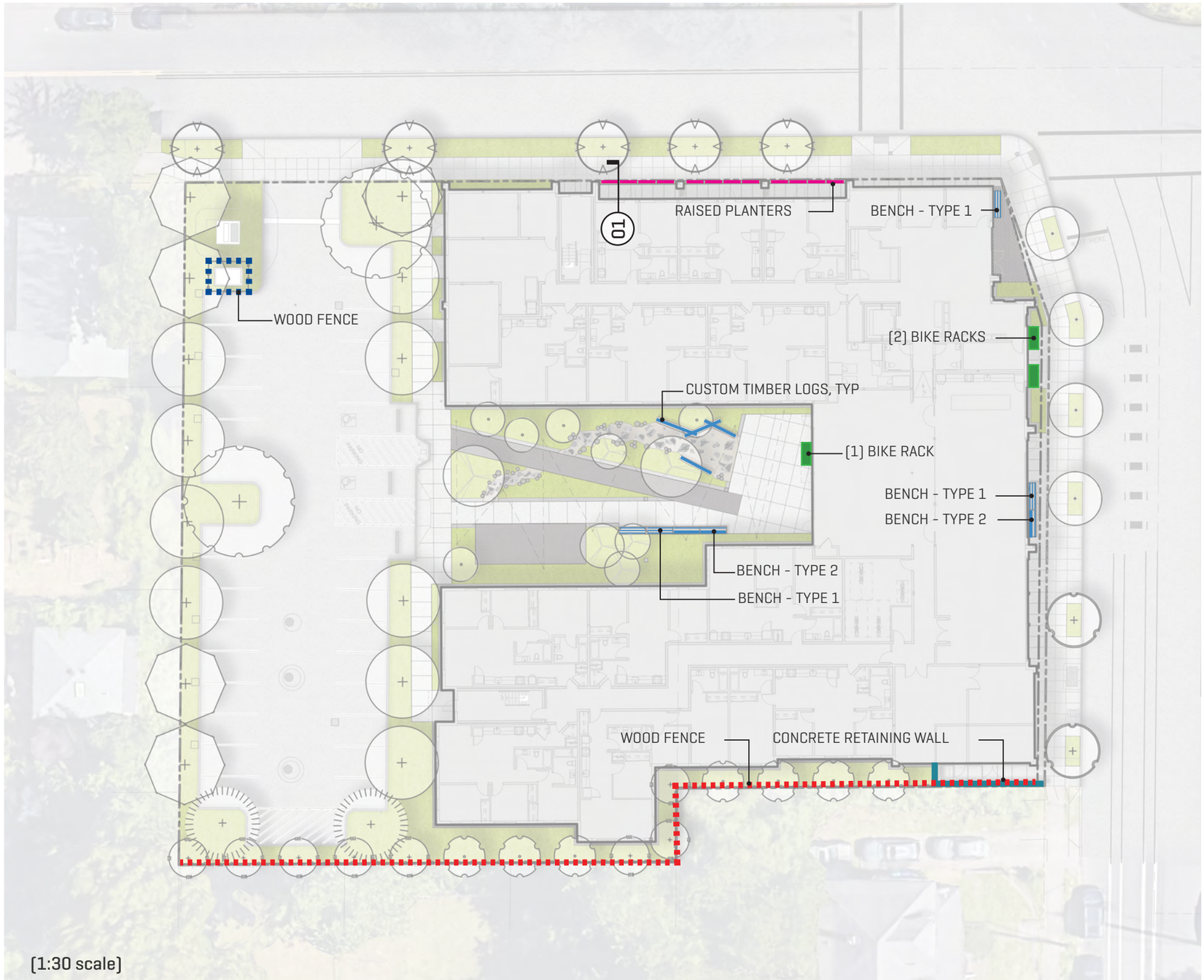

[1:30 scale]

96" HT. WOOD FENCE
72" HT. WOOD FENCE
30" HT. CONCRETE RETAINING WALL
SHORT TERM BIKE RACK
BENCH - TYPE 1
BENCH - TYPE 2 (BACKED)
CUSTOM TIMBER LOGS
RAISED PLANTER

HOLST
© 2023 HOLST ARCHITECTURE INC.

STRONG PROPERTY
4931-4947 N WILLIAMS AVE
PORTLAND, OR 97217

GROUNDWORKSHOP

DESIGN REVIEW
11.15.2023

title : LANDSCAPE PLAN

LU NO. LU 23-103655 DZ
Exhibit A6

sheet : C.40

Link Configuration #3

Benches

(1) Straight Piano Key

(1) Full Back

Bases

(2) Metal Supports

Arms

(2) Backed Arms

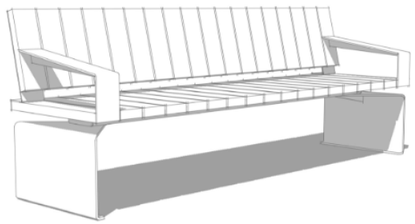

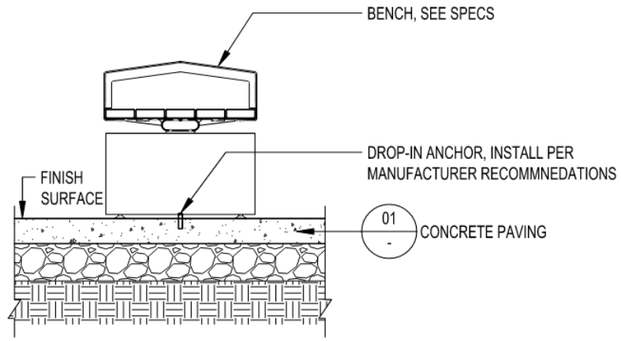

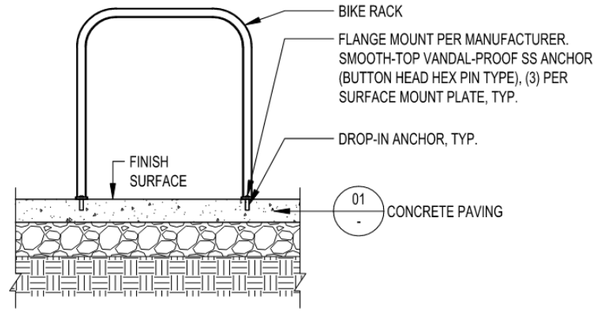

Bench - Type 2

Landscape Forms In-Line Link Bench, with back

Bench - Type 1

Landscape Forms in-line Link Bench, backless

Bike Rack

Huntco Burnside

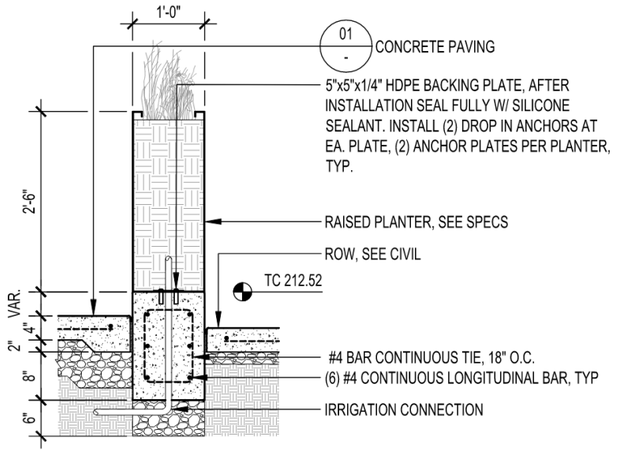

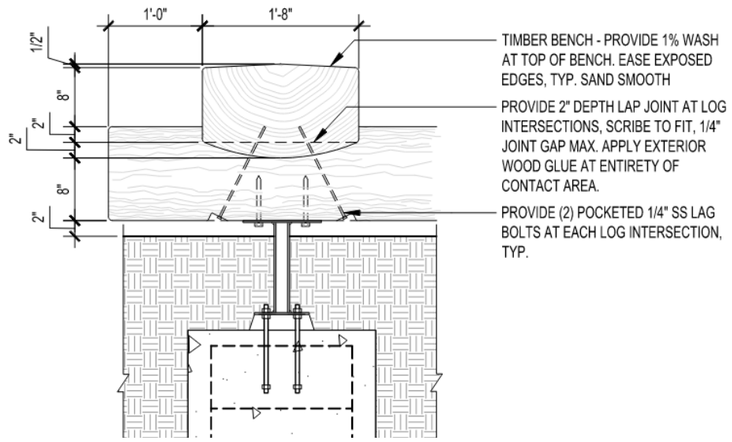

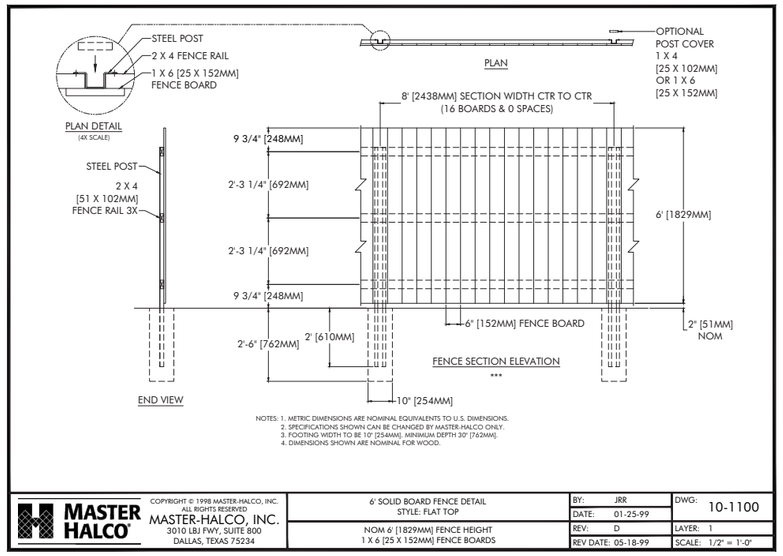

Raised Planter
12x60x30 raised steel planter

Custom Timber Log
Custom milled stacked timbers

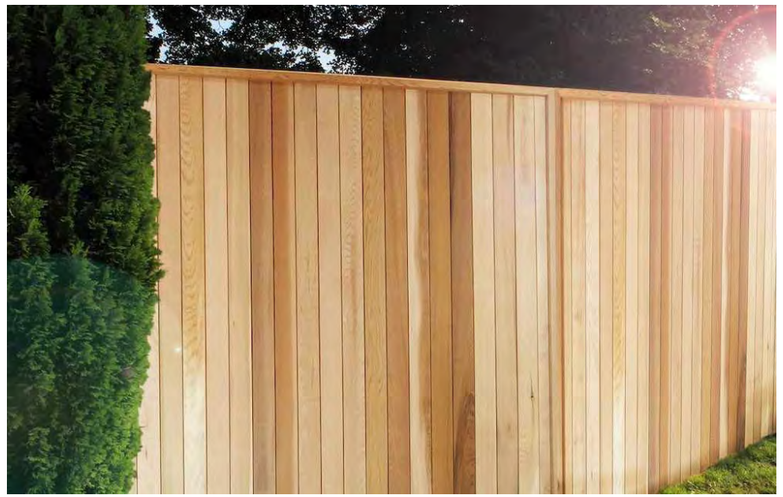

Wood Fence
Master-Halco Postmaster vertical cedar slat fence

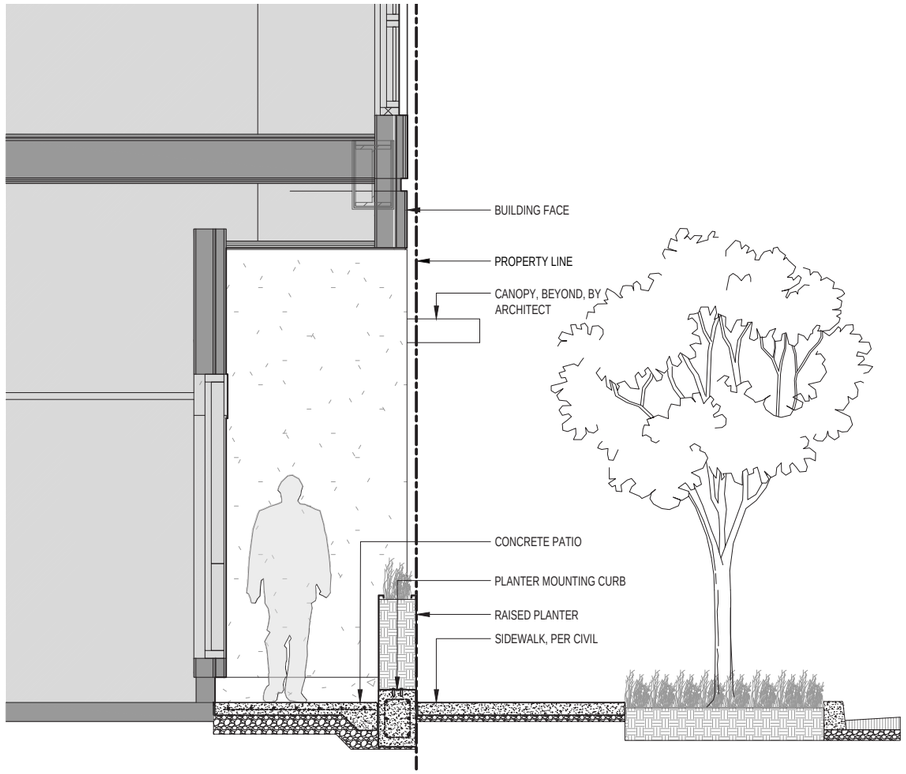

01 Private Patio Section
1/4" = 1'-0"

© 2023 HOLST ARCHITECTURE INC.

STRONG PROPERTY
4931-4947 N WILLIAMS AVE
PORTLAND, OR 97217

GROUNDWORKSHOP

DESIGN REVIEW
11.15.2023

title : LANDSCAPE

LU NO. LU 23-103655 DZ
Exhibit A6

sheet : C.43

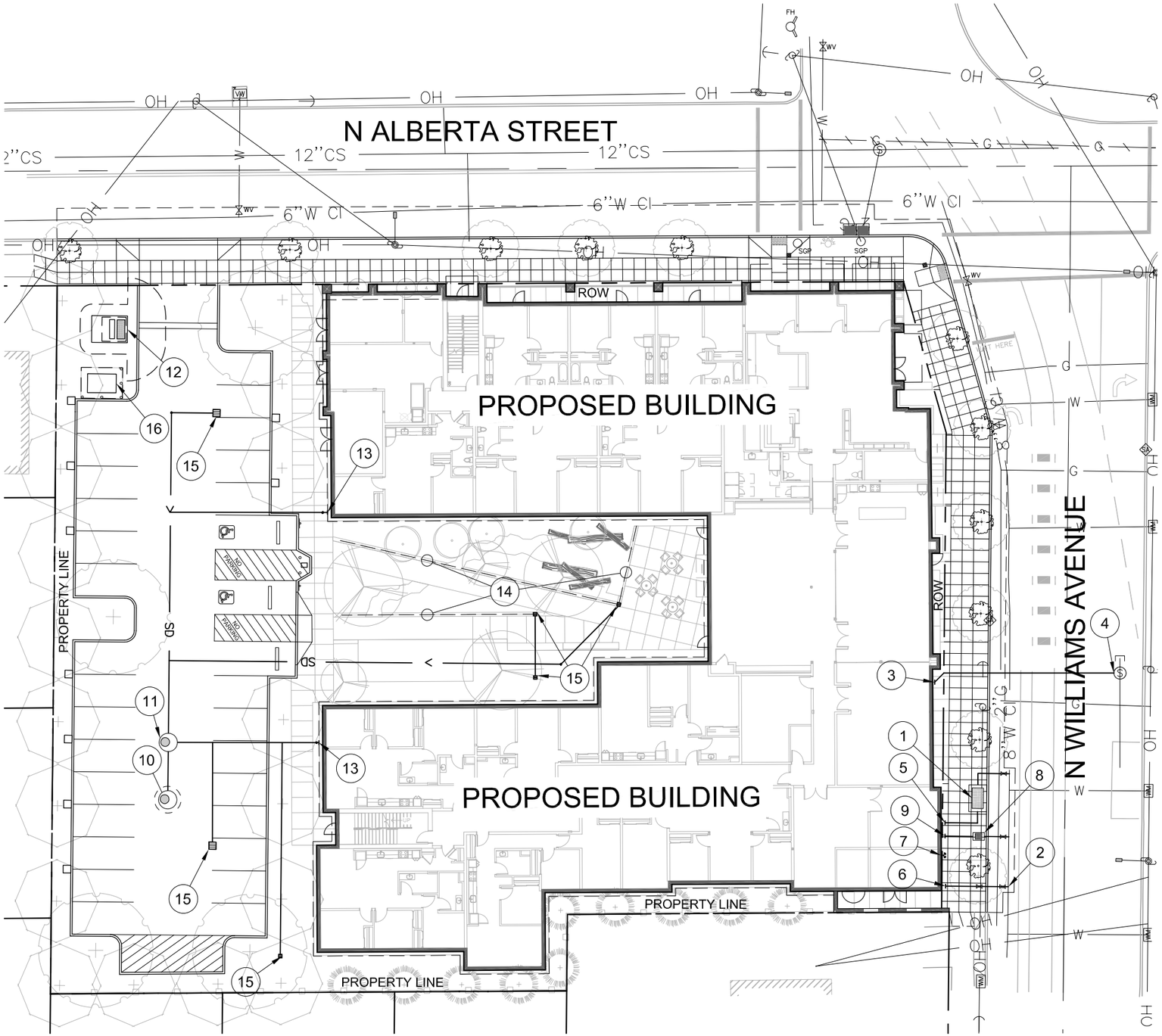

UTILITY PLAN

SCALE: 1"=30'

CONSTRUCTION NOTES

1. NEW 4" WATER METER, BY PORTLAND WATER BUREAU.
2. NEW X" FIRE LINE, BY PORTLAND WATER BUREAU.
3. NEW SANITARY CONNECTION FROM BUILDING
4. 10" SEWER CONNECTION TO COMBINED SEWER MAINTENANCE HOLE.
5. X" DOMESTIC WATER CONNECTION TO BUILDING. PREMISES-ISOLATION (PI) DCVA TO BE INSTALLED IN BUILDING PER WATER BUREAU REQUIREMENTS.
6. X" FIRE CONNECTION TO BUILDING. PREMISES-ISOLATION (PI) DCDA TO BE INSTALLED IN BUILDING PER WATER BUREAU REQUIREMENTS.
7. FIRE DEPARTMENT CONNECTION MOUNTED TO BUILDING FACE.
8. IRRIGATION METER, BY PORTLAND WATER BUREAU.
9. IRRIGATION CONNECTION TO BUILDING. PREMISES-ISOLATION (PI) DCDA TO BE INSTALLED IN BUILDING PER WATER BUREAU REQUIREMENTS.
10. DRYWELL, 10' PERFORATED SECTION, 40' TOTAL DEPTH
11. SEDIMENT MANHOLE, 10' TOTAL DEPTH.
12. PP&L PAD-MOUNTED TRANSFORMER VAULT.
13. STORM CONNECTION FROM BUILDING FOR ROOF DRAINAGE.
14. FRENCH DRAIN.
15. AREA DRAIN.
16. PAD-MOUNTED BATTERY ENERGY STORAGE SYSTEM.

STORMWATER NARRATIVE

PRIVATE SITE

STORMWATER RUNOFF FROM PROPOSED ROOF AND PAVED SURFACES WILL BE DIRECTED TO THE DRYWELL SYSTEM. THE DRYWELL SYSTEM IS DESIGNED TO FULLY INFILTRATE THE 100-YR STORM EVENT.

PUBLIC STREET IMPROVEMENTS

STORMWATER RUNOFF IN THE PUBLIC RIGHT-OF-WAY FOLLOWS THE EXISTING DRAINAGE PATTERN AND IS COLLECTED VIA NEW CATCH BASINS AND DIRECTED TO THE PUBLIC COMBINED SEWER SYSTEM.

UTILITY CONTACTS

ELECTRICAL
CLEO NARANJO
INTERFACE ENGINEERING, INC
CLEON@INTERFACEENG.COM
(503) 382-2724

BES
ROD KRAUTER
BUREAU OF ENVIRONMENTAL SERVICES
RODNEY.KRAUTER@PORTLANDOREGON.GOV
(503) 823-2073

WATER
KARI ANN SPOON
PORTLAND WATER BUREAU
KARIANN.SPOON@PORTLANDOREGON.GOV

N

0 30 60

1 INCH = 30 FEET

© 2023 HOLST ARCHITECTURE INC.

HOLST

STRONG PROPERTY
4931-4947 N WILLIAMS AVE
PORTLAND, OR 97217

DESIGN REVIEW
11.15.2023

title : CIVIL PLAN

LU NO.
LU 23-103655 DZ
Exhibit A6

sheet : C.44

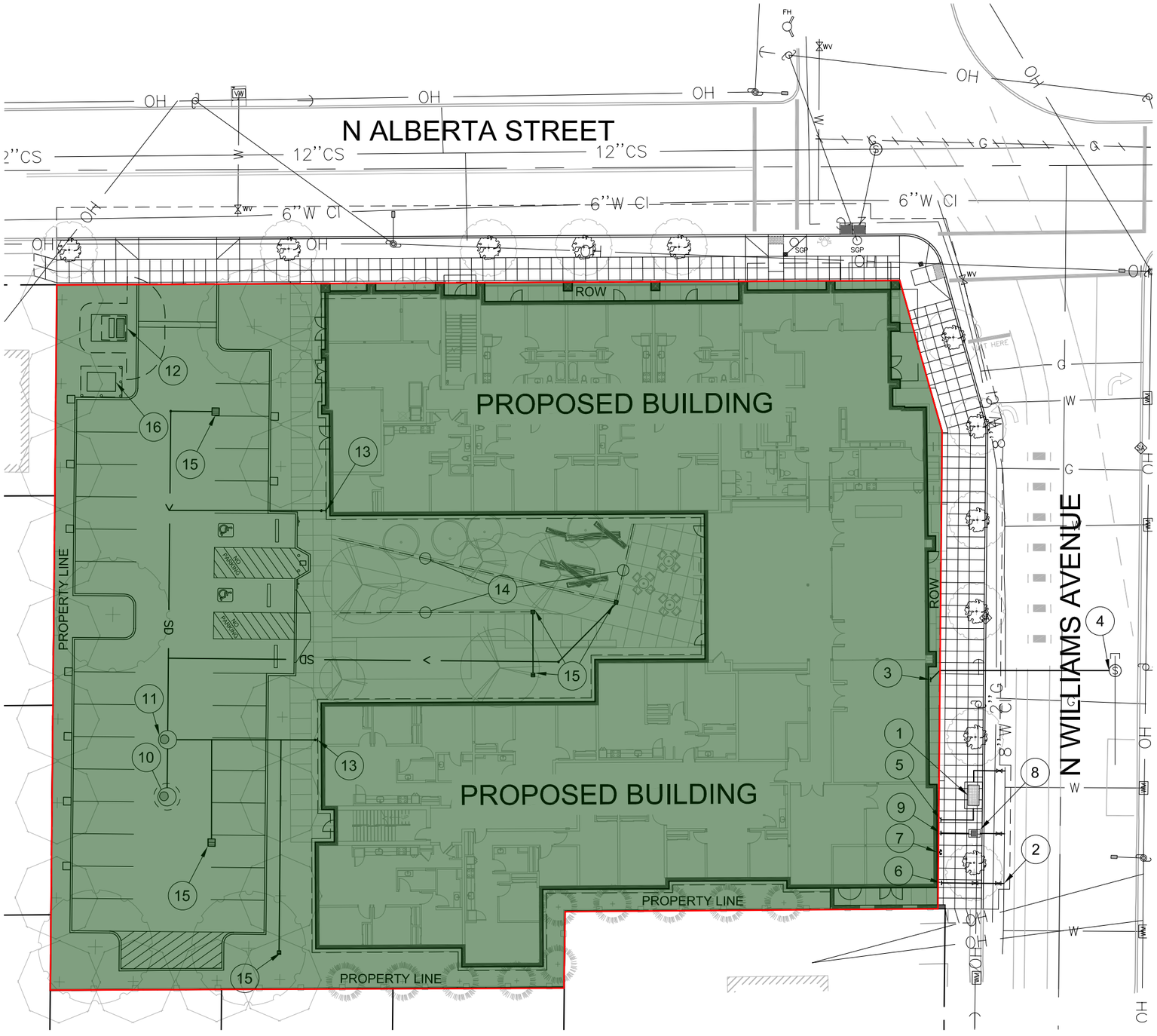

UTILITY PLAN

SCALE: 1"=30'

CATCHMENT AREA = 40,911 SF (CN=98)

CONSTRUCTION NOTES

1. NEW 4" WATER METER, BY PORTLAND WATER BUREAU.
2. NEW X" FIRE LINE, BY PORTLAND WATER BUREAU.
3. NEW SANITARY CONNECTION FROM BUILDING
4. 10" SEWER CONNECTION TO COMBINED SEWER MAINTENANCE HOLE.
5. X" DOMESTIC WATER CONNECTION TO BUILDING. PREMISES-ISOLATION (PI) DCVA TO BE INSTALLED IN BUILDING PER WATER BUREAU REQUIREMENTS.
6. X" FIRE CONNECTION TO BUILDING. PREMISES-ISOLATION (PI) DCDA TO BE INSTALLED IN BUILDING PER WATER BUREAU REQUIREMENTS.
7. FIRE DEPARTMENT CONNECTION MOUNTED TO BUILDING FACE.
8. IRRIGATION METER, BY PORTLAND WATER BUREAU.
9. IRRIGATION CONNECTION TO BUILDING. PREMISES-ISOLATION (PI) DCDA TO BE INSTALLED IN BUILDING PER WATER BUREAU REQUIREMENTS.
10. DRYWELL, 10' PERFORATED SECTION, 40' TOTAL DEPTH
11. SEDIMENT MANHOLE, 10' TOTAL DEPTH.
12. PP&L PAD-MOUNTED TRANSFORMER VAULT.
13. STORM CONNECTION FROM BUILDING FOR ROOF DRAINAGE.
14. FRENCH DRAIN.
15. AREA DRAIN.
16. PAD-MOUNTED BATTERY ENERGY STORAGE SYSTEM.

STORMWATER NARRATIVE

PRIVATE SITE

STORMWATER RUNOFF FROM PROPOSED ROOF AND PAVED SURFACES WILL BE DIRECTED TO THE DRYWELL SYSTEM. THE DRYWELL SYSTEM IS DESIGNED TO FULLY INFILTRATE THE 100-YR STORM EVENT.

PUBLIC STREET IMPROVEMENTS

STORMWATER RUNOFF IN THE PUBLIC RIGHT-OF-WAY FOLLOWS THE EXISTING DRAINAGE PATTERN AND IS COLLECTED VIA NEW CATCH BASINS AND DIRECTED TO THE PUBLIC COMBINED SEWER SYSTEM.

UTILITY CONTACTS

ELECTRICAL
CLEO NARANJO
INTERFACE ENGINEERING, INC
CLEON@INTERFACEENG.COM
(503) 382-2724

BES
ROD KRAUTER
BUREAU OF ENVIRONMENTAL SERVICES
RODNEY.KRAUTER@PORTLANDOREGON.GOV
(503) 823-2073

WATER
KARI ANN SPOON
PORTLAND WATER BUREAU
KARIANN.SPOON@PORTLANDOREGON.GOV

N

0 30 60

1 INCH = 30 FEET

© 2023 HOLST ARCHITECTURE INC.

LIGHTING LEGEND

- A — CABLE LIGHT
- B — RECESSED ROUND DOWNLIGHT
- C — RECESSED LINEAR DOWNLIGHT
- D — SURFACE-MOUNTED WALL SCONCE
- E — LINEAR WALL WASH LIGHT
- F — POLE LIGHT

SCALE: 1" = 30' - 0"

0' 15' 30' 60'

N

HOLST

© 2023 HOLST ARCHITECTURE INC.

STRONG PROPERTY
4931-4947 N WILLIAMS AVE
PORTLAND, OR 97217

DESIGN REVIEW
11.15.2023

title : LEVEL 01 RCP - SITE LIGHTING PLAN

LU NO. LU 23-103655 DZ
Exhibit A6

sheet : C.46

LIGHTING

Festoon Mounting

Part# EX-MDA-WH (White)
Part# EX-MDA-BK (Black)

For festoon applications to a catenary cable, our wire-rope adaptors securely hold each socket in place to a 1/16" or 1/8" diameter wire rope. Wire rope and associated mounting hardware is not provided with the system.

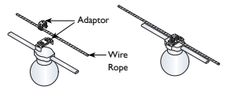

A **EXHIBITOR CABLE LIGHTING**

---

gotham | INCITO™
Multiple Layers of Light

Luminaire Type:
Catalog Number:

High Center Beam Round Downlight **4"**

OVERVIEW

Feature Set

- Eleven optimized distribution patterns allow designers to achieve tailored objectives
- Bounding Ray™ optical design
- 45° Cutoff to source and source image
- Field interchangeable optic
- Driver and LED light engine fully serviceable from below ceiling
- 70% lumen maintenance at 60,000 hours
- 2.5 SDCM; 85 CRI typical, 90+ CRI optional
- Fixtures are wet location, covered ceiling
- ENERGY STAR® Certified product

Distribution

Superior Perfomance

Nominal Lumens	500	750	1000	1500	2000	2500	3000	3500	4000	4500	5000
Delivered	703	807	1062	1545	1977	2419	2920	3548	3982	4419	4848
Wattage	6.7	7.5	9.8	15.1	21.5	26.5	34.1	33.8	39.5	46.2	53.2
Efficacy	104	108	108	102	92	91	86	105	101	96	91

*Based on 3500K 80CRI 35D AR LSS

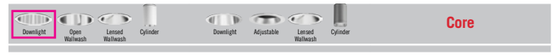

B **GOTHAM INCITO RECESSED ROUND DOWNLIGHT**

MARK ARCHITECTURAL LIGHTING™

Slot 2 LED
Recessed Linear

Slot 2 LED takes both form and function a step further with increased efficacy and integral controls creating a digitally addressable luminaire that is perfect where visually harmonious illumination and energy efficiency are desired.

Slot 2 LED is the ideal choice for spaces that emphasize lines and clean contemporary design. It is a perfect fit for Armstrong TechZone™ ceiling systems. A regressed lens option provides added dimension to the sleek, slender design and the flush lens now has a Wet Label option.

Type:
Project:
Catalog Number:
DO NOT TYPE HERE. Autopopulated field.

Specification Features

Housing
Nominal 2' x 2', 3', 4', 5', 6', 7', 8' and continuous rows in 1' increments as standard, upper housing fabricated from cold-rolled steel with extruded aluminum ceiling trim.

Finish
Polyester powder coat painted finish.

Reflector
Precision-formed steel; high reflectance matte white powder coat; 93% reflectivity.

Shielding
Flush Lens: Snap-in 90% transmissive satin acrylic lens. Lens is not sealed or gasketed.
Regressed Lens: Lay-in 90% transmissive satin acrylic lens.

Mounting
Recessed. Available for sheetrock, 9/16' slot grid or 15/16' inverted tee ceilings, or 9/16' inverted tee.

Certification
CSA certified to meet U.S. and Canadian standards (UL1598 and UL8750). This product is IC rated. Optional Damp (DPL) or Wet (WL) location listings available with specified nomenclature. Wet location listing is suitable for covered ceiling mount installation only, where any water exposure is beneath the non-porous mount surface.

Warranty
5-year limited warranty. This is the only warranty provided and no other statements in this specification sheet create any warranty of any kind. All other express and implied warranties are disclaimed. Complete warranty terms located at: www.acuitybrands.com/support/warranty/terms-and-conditions

A+ Capable Luminaire
This item is an A+ capable luminaire, which has been designed and tested to provide consistent color appearance and out-of-the-box control compatibility with simple commissioning when used with Acuity Brands controls products.
All configurations of this luminaire are calibrated and tested to meet the Acuity Brands' specification for chromatic consistency - including color rendering, color fidelity, and color temperature tolerance around standard CIE chromaticity coordinates.
To learn more about Acuity A+ standards, specifications, and testing, visit www.acuitybrands.com/aplus

***Note:** Actual performance may differ as a result of end-user environment and application.*
All values are design or typical values, measured under laboratory conditions at 25 °C.
Specifications subject to change without notice.

Technical Drawing

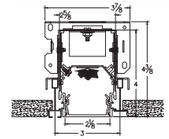

C **MARK SLOT 2 LED RECESSED LINEAR**

WDGE1 LED
Architectural Wall Sconce

Catalog Number
Notes
Type
Hit the Tab key or mouse over the page to see all interactive elements.

Specifications

Depth (D1):	5.5"
Depth (D2):	1.5"
Height:	8"
Width:	9"
Weight: (without options)	9 lbs

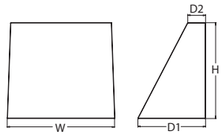

Introduction

The WDGE LED family is designed to meet specifier's every wall-mounted lighting need in a widely accepted shape that blends with any architecture. The clean rectilinear design comes in four sizes with lumen packages ranging from 1,200 to 25,000 lumens, providing true site-wide solution.

WDGE1 delivers up to 2,000 lumens with a soft, non-pixelated light source, creating a visually comfortable environment. The compact size of WDGE1, with its integrated emergency battery backup option, makes it an ideal over-the-door wall-mounted lighting solution.

WDGE LED Family Overview

Luminaire	Standard EM, 0°C	Cold EM, -20°C	Sensor	Lumens (4000K)					
				P1	P2	P3	P4	P5	P6
WDGE1 LED	4W	--	--	1,200	2,000	--	--	--	--
WDGE2 LED	10W	18W	Standalone / nLight	1,200	2,000	3,000	4,500	6,000	--
WDGE3 LED	15W	18W	Standalone / nLight	7,500	8,500	10,000	12,000	--	--
WDGE4 LED	--	--	Standalone / nLight	12,000	16,000	18,000	20,000	22,000	25,000

D **WDGE1 LED WALL SCONCE**

MARK ARCHITECTURAL LIGHTING™

The SPR LED Series

SPR LED combines the environmental and cost-saving benefits of solid-state lighting with the popular SP design. The result is a recessed linear wall product that provides an excellent balance of efficiency and performance.

SPR LED, which features a very compact profile, offers highly uniform illumination along wall surfaces. Housing and vertical fascias are extruded aluminum, and the extruded clear frosted acrylic lens snaps into the housing. SPR LED is available in 8-, 7-, 6-, 5-, 4-, 3-, and 2-foot sections. Corners are available; please consult factory.

Type:
Project:
Catalog Number:
DO NOT TYPE HERE. Autopopulated field.

Specification Features (continued on page 2)

Housing
Housing and vertical fascias are extruded aluminum. Internal wiring trays are 20-gauge, cold-rolled steel.

Housing Finish
Natural Aluminium; Fascia is high reflectance matte white .

Shielding
Extruded clear frost acrylic lens snaps into housing.

Mounting
Recessed perimeter wall wash in 8', 7', 6', 5', 4', 3', and 2' sections.

Fixture Performance - SPRL

Lumens Output	400 LMF	600 LMF	800 LMF	1000 LMF
Delivered Lumens (l/ft)	367	632	856	1078
Input Watts	3.4	5.8	8.0	10.5
Lumen/Watt	106.8	108.8	106.7	102.8

Results based on a 4FT 80CRI 35K luminaire.
Consult factory for customized lumen and wattage based on calculated values.

Technical Drawings

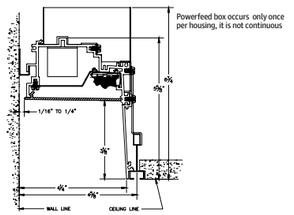

E **MARK SPR LINEAR WALL WASH**

D-Series Size 1
LED Area Luminaire

Catalog Number
Notes
Type
Hit the Tab key or mouse over the page to see all interactive elements.

d-series

Specifications

EPA:	0.69 ft² (0.06 m²)
Length:	32.71" (83.1 cm)
Width:	14.26" (36.2 cm)
Height H1:	7.88" (20.0 cm)
Height H2:	2.73" (6.9 cm)
Weight:	34 lbs (15.4 kg)

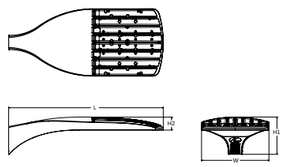

Introduction

The modern styling of the D-Series features a highly refined aesthetic that blends seamlessly with its environment. The D-Series offers the benefits of the latest in LED technology into a high performance, high efficacy, long-life luminaire.

The photometric performance results in sites with excellent uniformity, greater pole spacing and lower power density. D-Series outstanding photometry aids in reducing the number of poles required in area lighting applications with typical energy savings of 65% and expected service life of over 100,000 hours.

Ordering Information **EXAMPLE:** DSX1 LED P7 40K 70CRI T3M MVOLT SPA NLTAIR2 PIRHN DDBXD

DSX1 LED

Series	LEDs	Color temperature[3]	Color Rendering Index[4]	Distribution		Voltage	Mounting
DSX1 LED	**Forward optics**	(this section 70CRI only)		AFR Automotive front row	T5M Type V medium	MVOLT (120V-277V)[6]	**Shipped included**
	P1 P6	30K 3000K	70CRI	T1S Type I short	T5LG Type V low glare	HVOLT (347V-480V)[5,6]	SPA Square pole mounting (#8 drilling)
	P2 P7	40K 4000K	70CRI	T2M Type II medium	T5W Type V wide	XVOLT (277V - 480V)[7,8]	RPA Round pole mounting (#8 drilling)
	P3 P8	50K 5000K	70CRI	T3M Type III medium	BLC3 Type III backlight control[9]	120[16,26]	SPAS Square pole mounting #5 drilling[9]
	P4 P9	(this section 80CRI only, extended lead times apply)		T3LG Type III low glare[9]		208[16,26]	
	P5			T4M Type IV medium	BLC4 Type IV backlight control[9]	240[16,26]	

F **LITHONIA D-SERIES POLE LIGHT**

© 2023 HOLST ARCHITECTURE INC.

MATERIALS

FCP-X, FIBER CEMENT PANEL

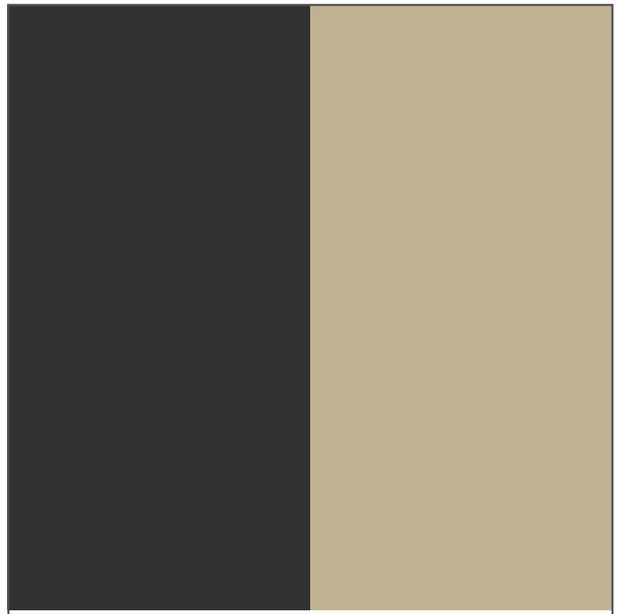

MANUFACTURER: JAMES HARDIE
PRODUCT: PANEL SMOOTH
COLOR: CUSTOM
SIZE: 4’H x 10’L x 3/8”D

FCS-X, FIBER CEMENT LAP SIDING

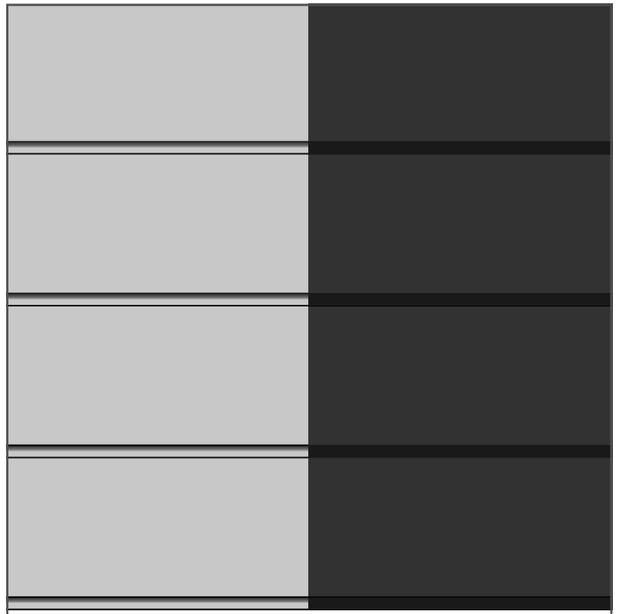

MANUFACTURER: JAMES HARDIE
PRODUCT: ARTISAN V GROOVE
COLOR: CUSTOM
SIZE: 7”H x 12’L x 5/8”D

WDX-1, T&G CEDAR SIDING

PRODUCT: T&G WESTERN RED CEDAR
SIZE: 3/4”D X 3 1/2”W

MATERIALS

SF-1, ALUMINUM STOREFRONT ENTRANCES

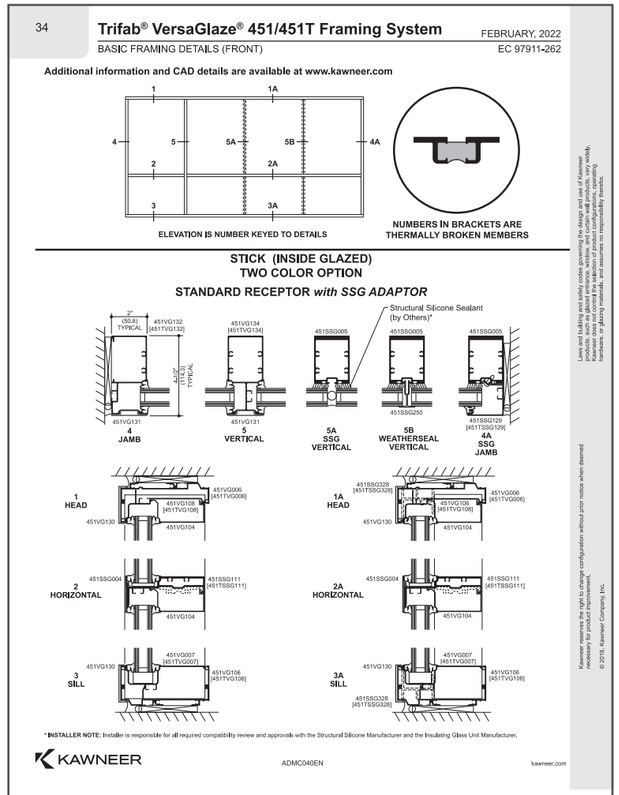

MANUFACTURER: KAWNEER
TYPE: 415T FRAMING, WEATHERSEAL JOINTS
COLOR: CUSTOM, ADOBE

WND-X, VINYL WINDOW

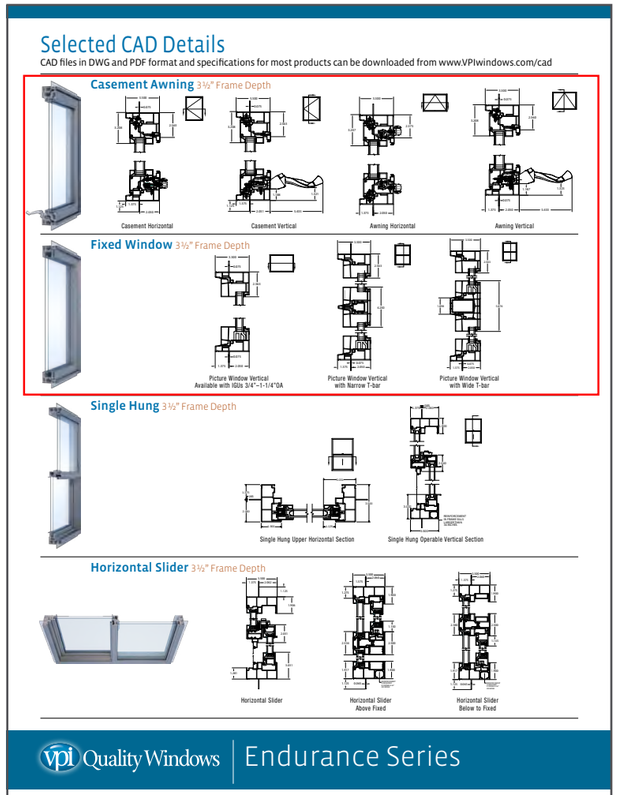

MANUFACTURER: VPI ENDURANCE SERIES
TYPE: FIXED AND CASEMENT
COLOR: ADOBE EXTERIOR

ST-X, ACRYLIC STUCCO

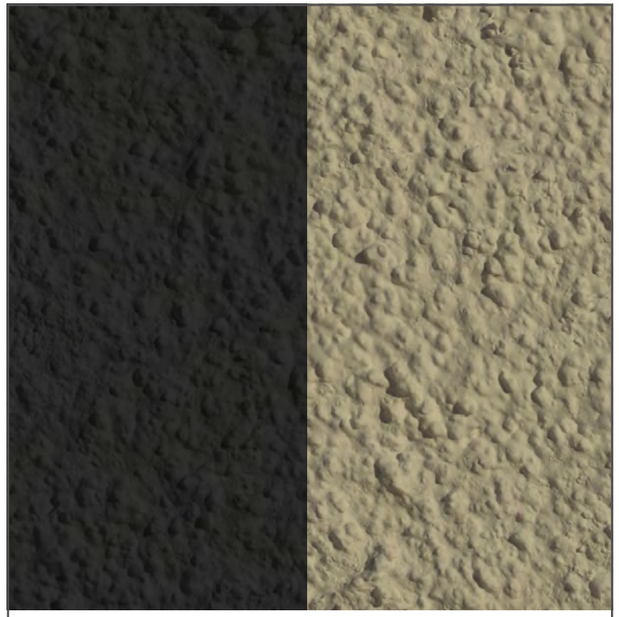

PRODUCT: DRYVIT COMMERCIAL CEMENT PLASTER
COLOR: CUSTOM

MECHANICAL

1 RTU - EXHAUST FAN

GREENHECK
Building Value in Air.

Model: USF-15-B6

Universal Single Width Blower

Standard Construction Features: Galvanized steel scroll (optional coated steel or aluminum) with bolted frame, PermaLock seam. Centrifugal backward inclined coated steel (optional aluminum) wheel. Galvanized (optional coated steel or aluminum) inlet cone. Direct driven motor mounted out of the airstream.
Certifications/special requirements: Emergency Smoke Control

Fan Configuration	
Class	I
Arrangement	4
Discharge position	UB
Wheel rotation	CW
Fan material	Steel
Drive type	Direct

Performance	
Requested Volume (CFM)	1,000
Actual Volume (CFM)	1,000
Total External SP (in. wg)	0.75
Operating frequency (Hz)	50
Fan RPM	979
Operating Power (bhp)	0.17
Startup Power (bhp)	0.28
Air Stream Temp (F)	70
Start-up Temp (F)	70
Air Density (lbs/ft^3)	0.074
Elevation (ft)	200
Static Efficiency (%)	71
Outlet Velocity (ft/min)	773

Motor	
Size (hp)	1/3
V/C/P	460/60/3
NEC FLA (Amps)	1.1
Min Circuit Ampacity (MCA)	1.4
Max Overload Production (MOP)	15

FLA - based on tables 150 or 148 of National Electric Code 2002. Actual motor FLA may vary, for sizing thermal overload, consult factory. MCA and MOP values shown only account for the motor, not accessories (damper actuator, field supplied VFD, etc.).

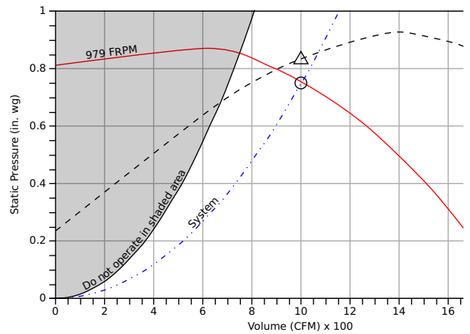

Sound

	Octave Bands (hz)								LwA	dBA	Sones
	62.5	125	250	500	1000	2000	4000	8000			
Inlet	71	69	65	61	56	54	48	41	63	52	6.2
Outlet	85	76	65	61	60	54	48	40	67	55	8.8

amca WORLDWIDE CERTIFIED RATINGS SOUND AND AIR PERFORMANCE

Greenheck Fan Corporation certifies that the model shown herein is licensed to bear the AMCA Seal. The ratings shown are based on tests and procedures performed in accordance with AMCA Publication 211 and AMCA Publication 311 and comply with the requirements of the AMCA Certified Ratings Program.The AMCA certified ratings seal applies to sound and air performance ratings only.Performance certified is for installation type B: Free inlet, ducted outlet.Power rating does not include transmission losses.Performance ratings do not include the effects of appurtenances.The AMCA licensed air and/or sound performance data has been modified for installation, appurtenances, etc. not included in the certified data. The modified performance is not AMCA licensed but is provided to aid in selection and applications of the product.The sound power level ratings are shown in decibels, referred to 10^-12 watts calculated per AMCA Standard 301. The A-weighted sound ratings shown have been calculated per AMCA International Standard 301.Values shown are for inlet Lwi, LwiA and outlet Lwo, LwoA sound power levels for installation Type B: free inlet, ducted outlet. Ratings for outlet sound include the effects of duct end correction.dBA levels are not licensed by AMCA International. The AMCA Certified Ratings Seal for Sound applies to inlet Lwi, LwiA and outlet Lwo, LwoA ratings only.

2 RTU - DOAS

Technical Data Sheet

Job Information	*Technical Data Sheet*
Job Name	
Date	
Submitted By	
Software Version	
Unit Tag	

Unit Overview

Model Number	Voltage V/Hz/Phase	Design Cooling Capacity Btu/hr	AHRi360 Standard Efficiency		ASHRAE 90.1-2019 Compliant
			EER	IEER	
DPS007A	460/60/3	81413	12.6	18.8	ASHRAE 90.1-2019 compliant

Unit

Model Number:	DPS007A
Model Type:	Heat Pump
Heat Type:	Electric
Energy Recovery:	ERW-Med Cab-Econ: 2835 cfm max, 100% OA: 5145 cfm max
Application:	Variable Air Volume, Single Zone (Mixed Air or 100% OA)
Controls:	Microtech III
Outside Air:	0-100% Economizer with Drybulb Control
Altitude:	0 ft
Approval	cETLus

Physical

Dimensions and Weight			
Length	Height*	Width	Weight*
111.0 in	56.8 in	96.5 in	2396 lb

Corner Weights			
L1	L2	L3	L4
417 lb	399 lb	772 lb	807 lb

Construction			
Exterior	Insulation and Liners	Air Opening Location	
		Return	Supply
Painted Galvanized Steel	1" Injected Foam, R-7, Galvanized Steel Liner	Bottom	Bottom

Electrical

Unit FLA	MCA	MROPD	SCCR
42.0 A	48.8 A	50 A	5 kAIC

Note: Use only copper supply wires with ampacity based on 75° C conductor rating. Connections to terminals must be made with copper lugs and copper wire.

MECHANICAL

3 RTU - DUCTLESS MINI-SPLIT

DAIKIN

Submittal Data Sheet
2.0-Ton Wall Mounted Unit
FAQ24TAVJURZQ24TAVJUA

OUTDOOR UNIT DETAILS			
Power Supply (V/Hz/Ph):	208-230 / 60 / 1	Compressor Stage:	
Power Supply Connections:	L1, L2, Ground	Capacity Control Range (%):	14 - 100
Min. Circuit Amps MCA (A):	16.5	Airflow Rate (H) (CFM):	2862
Max Overcurrent Protection (MOP) (A):	20	Gas Pipe Connection (inch):	5/8
Max Starting Current MSC(A):		Liquid Pipe Connection (inch):	3/8
Rated Load Amps RLA(A):	15.3	Sound Pressure (H) (dBA):	58
Dimensions (HxWxD) (in):	39 x 37 x 12-5/8	Sound Power Level (dBA):	
Net Weight (lb):	172		

DIMENSIONAL DRAWING - OUTDOOR UNIT

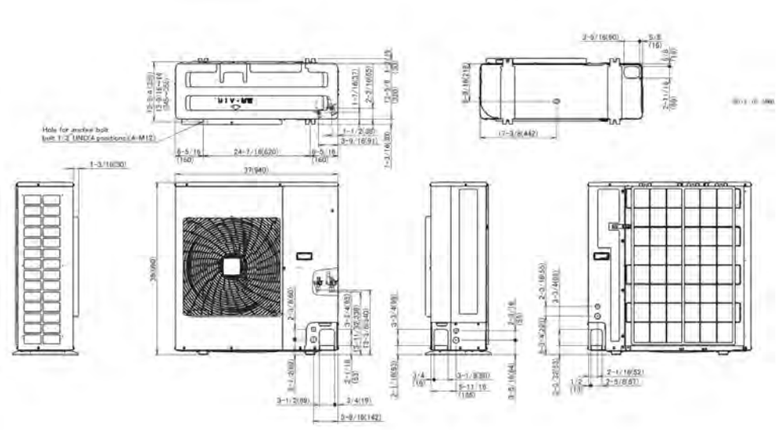

Daikin North America LLC, 5151 San Felipe, Suite 500, Houston, TX, 77056

APPENDIX

© 2023 HOLST ARCHITECTURE INC.

NE CORNER

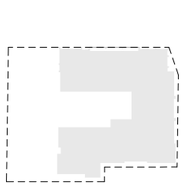

HOLST

© 2023 HOLST ARCHITECTURE INC.

STRONG PROPERTY

4931-4947 N WILLIAMS AVE
PORTLAND, OR 97217

DESIGN REVIEW

11.15.2023

title : RENDERINGS

LU NO. LU 23-103655 DZ
Exhibit A6

sheet : APP.2

NE CORNER

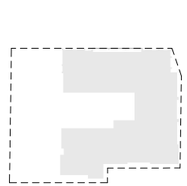

HOLST

© 2023 HOLST ARCHITECTURE INC.

STRONG PROPERTY
4931-4947 N WILLIAMS AVE
PORTLAND, OR 97217

DESIGN REVIEW
11.15.2023

title : RENDERINGS

LU NO. LU 23-103655 DZ
Exhibit A6

sheet : APP.3

SE CORNER

*Art shown for location only (not actual design).

© 2023 HOLST ARCHITECTURE INC.

HOLST

STRONG PROPERTY
4931-4947 N WILLIAMS AVE
PORTLAND, OR 97217

DESIGN REVIEW
11.15.2023

title : RENDERINGS

LU NO. LU 23-103655 DZ
Exhibit A6

sheet : APP.4

NW CORNER

*Art shown for location only (not actual design).

© 2023 HOLST ARCHITECTURE INC.

HOLST

STRONG PROPERTY
4931-4947 N WILLIAMS AVE
PORTLAND, OR 97217

DESIGN REVIEW
11.15.2023

title : RENDERINGS

LU NO. LU 23-103655 DZ
Exhibit A6

sheet : APP.5

COURTYARD

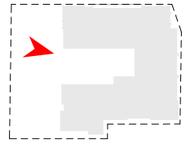

N FACADE

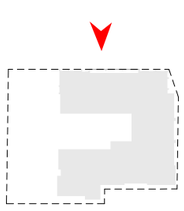

*Art shown for location only (not actual design).

© 2023 HOLST ARCHITECTURE INC.

HOLST

STRONG PROPERTY
4931-4947 N WILLIAMS AVE
PORTLAND, OR 97217

DESIGN REVIEW
11.15.2023

title : RENDERINGS

LU NO. LU 23-103655 DZ
Exhibit A6

sheet : APP.7

E FACADE

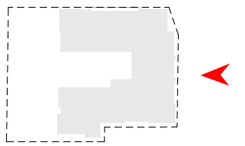

*Art shown for location only (not actual design).

MAIN ENTRY

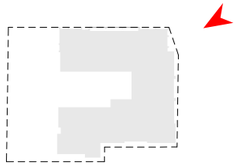

© 2023 HOLST ARCHITECTURE INC.

UNITS ON ALBERTA

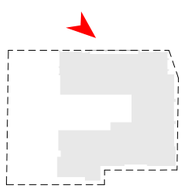

© 2023 HOLST ARCHITECTURE INC.

COMM. RM. ENTRY

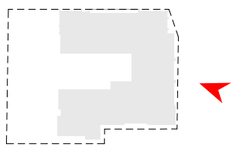

© 2023 HOLST ARCHITECTURE INC.

NW CORNER

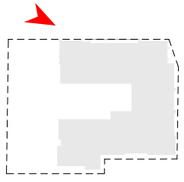

*Art shown for location only (not actual design).

© 2023 HOLST ARCHITECTURE INC.

HOLST

STRONG PROPERTY
4931-4947 N WILLIAMS AVE
PORTLAND, OR 97217

DESIGN REVIEW
11.15.2023

title : RENDERINGS

LU NO. LU 23-103655 DZ
Exhibit A6

sheet : APP.12

CONTEXT STUDIES

MULTI-MODAL CIRCULATION MAP

CAR DOMINANT VEHICLE CIRCULATION

- BUS LINE 44

- ONE WAY STREETS ON WILLIAMS ST AND VANCOUVER ST

- ALBERTA SERVES AS TWO DIRECTION STREET, WITH ONE LANE PER DIRECTION

PEDESTRIAN & VEHICLE ACCESS POINTS

- PEDESTRIAN ACCESS: N ALBERTA

- VEHICLE ACCESS: N ALBERTA

- BICYCLE ACCESS : DEDICATED BIKE LANE ON N WILLIAMS AVE

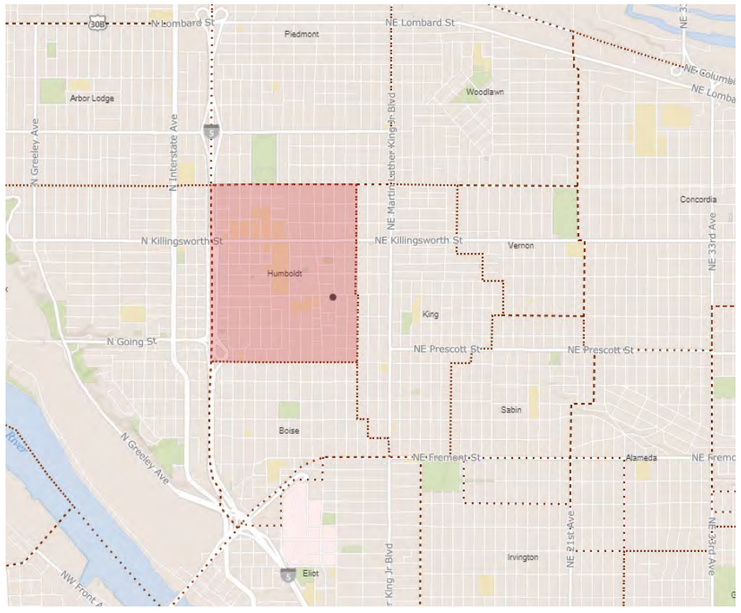

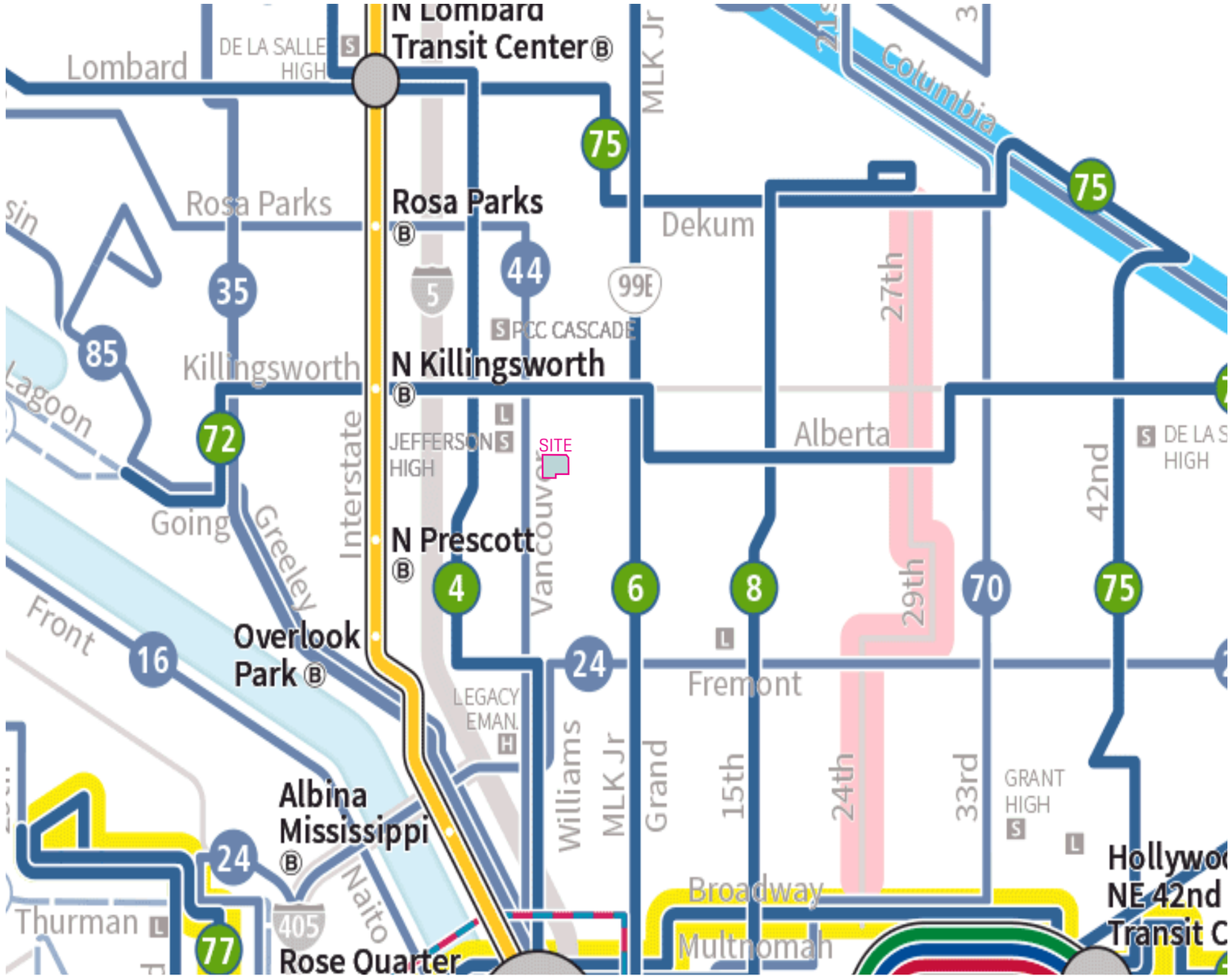

CONTEXT STUDIES

EXISTING CONDITIONS

EXISTING CONDITIONS PLAN

- SINGLE FAMILY HOUSE TO BE DEMOLISHED
- PERIPHERAL BUILDINGS TO REMAIN
- FIVE CURB-CUTS ON SITE
- TREES ON SITE TO BE REMOVED

View 1: Site from House on Site looking Southeast

View 2: Site from Northwest looking Southeast.

CONTEXT STUDIES

EXISTING CONDITIONS

View 3: Site from opposite corner

View 4: Site from East looking West

View 5: Site from Southeast looking Northwest

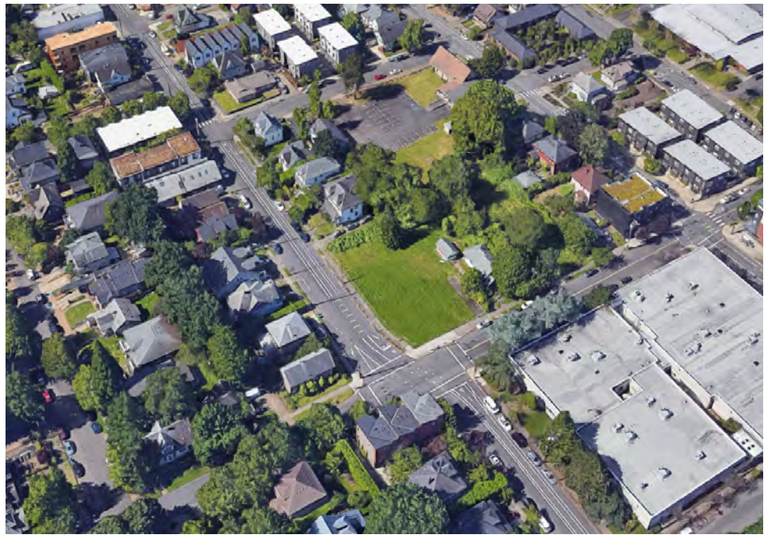

Aerial view from NE looking SW

Aerial view from SW looking NE

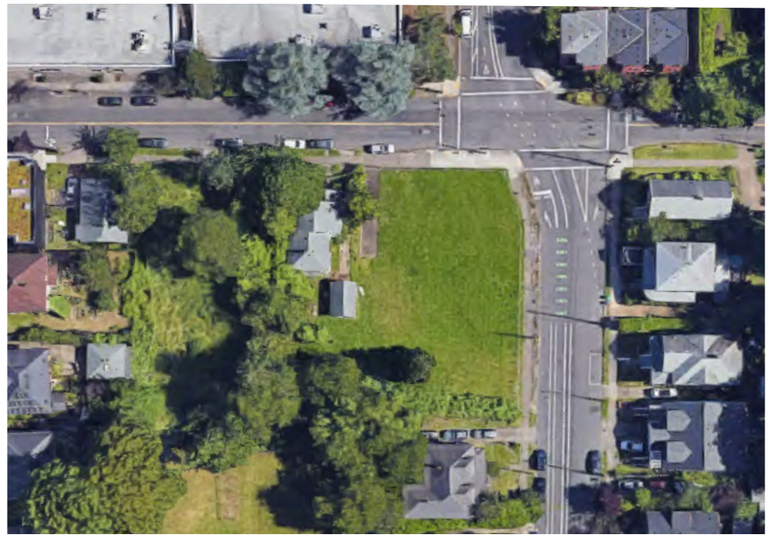

View of complete block

ROOFTOP EQUIPMENT SIGHTLINES

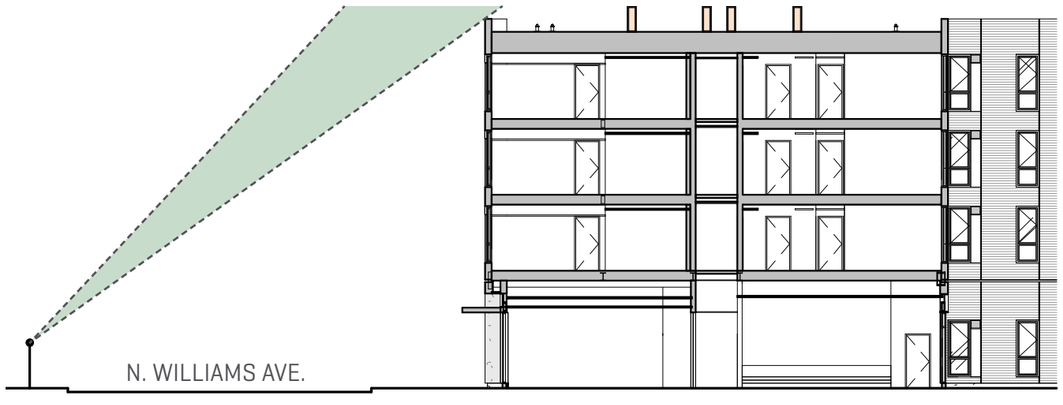

LEGEND

- MECHANICAL EQUIPMENT
- PEDESTRIAN VIEW ANGLE

*33.130.235.C.3 - EQUIPMENT ON ROOF IS SET BACK FROM ROOF EDGES FACING RM2 ZONE 3 FEET FOR EACH FOOT OF EQUIPMENT HEIGHT

HOLST

© 2023 HOLST ARCHITECTURE INC.

STRONG PROPERTY
4931-4947 N WILLIAMS AVE
PORTLAND, OR 97217

DESIGN REVIEW
11.15.2023

title : SITELINES

LU NO. LU 23-103655 DZ
Exhibit A6

sheet : APP.16

CONCEPT MASSING

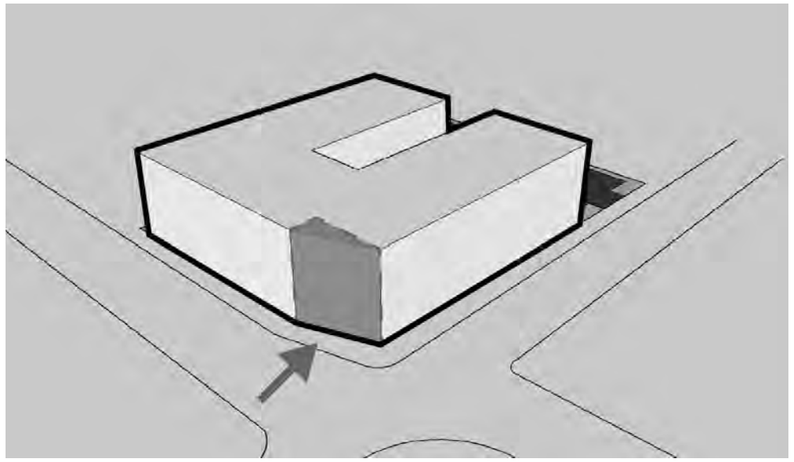

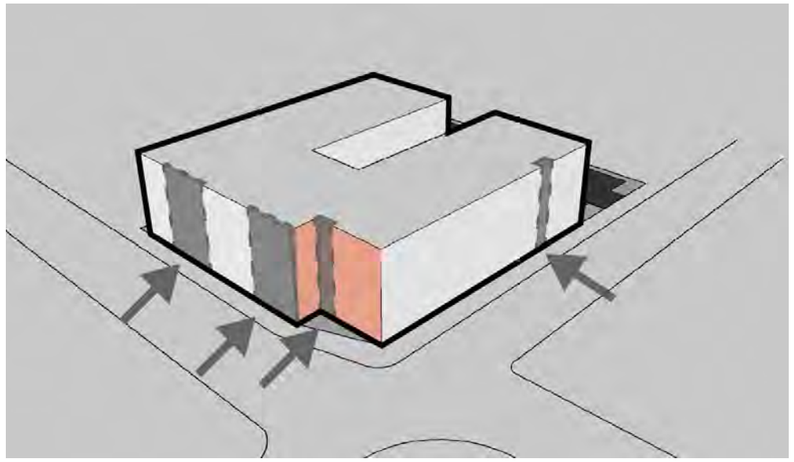

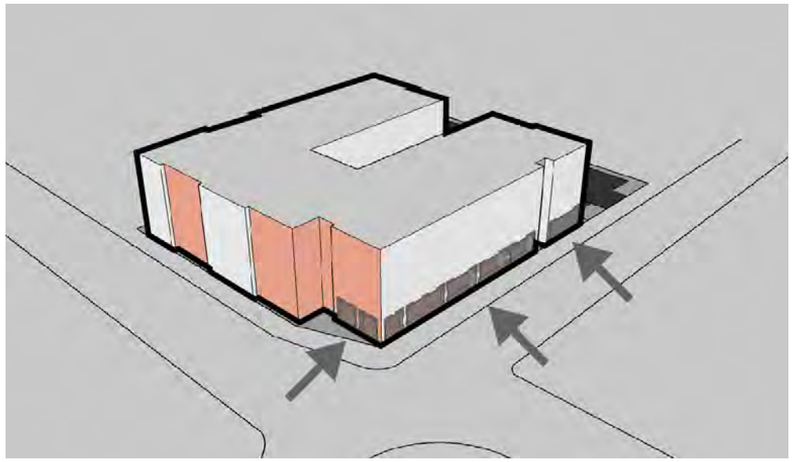

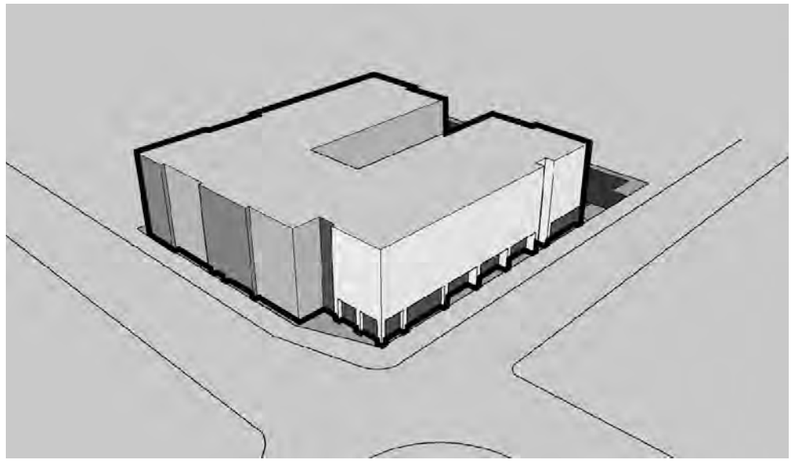

The ‘village’ scheme introduces offset massing along N. Williams facade to relate to the adjacent context of single family homes across the street. A recessed main entry at the corner of N. Williams and N. Alberta provides an opportunity for an entry plaza and a clear identity for the front door. A singular massing is maintained along N. Alberta to relate to the distinctly different context. The Alberta massing extends to the property line on the upper levels, insetting along the ground floor to provide privacy at the ground floor units.

© 2023 HOLST ARCHITECTURE INC.

STRONG PROPERTY
4931-4947 N WILLIAMS AVE
PORTLAND, OR 97217

DESIGN REVIEW
11.15.2023

title : MASSING & DESIGN CONCEPT

LU NO. LU 23-103655 DZ
Exhibit A6

sheet : APP.17

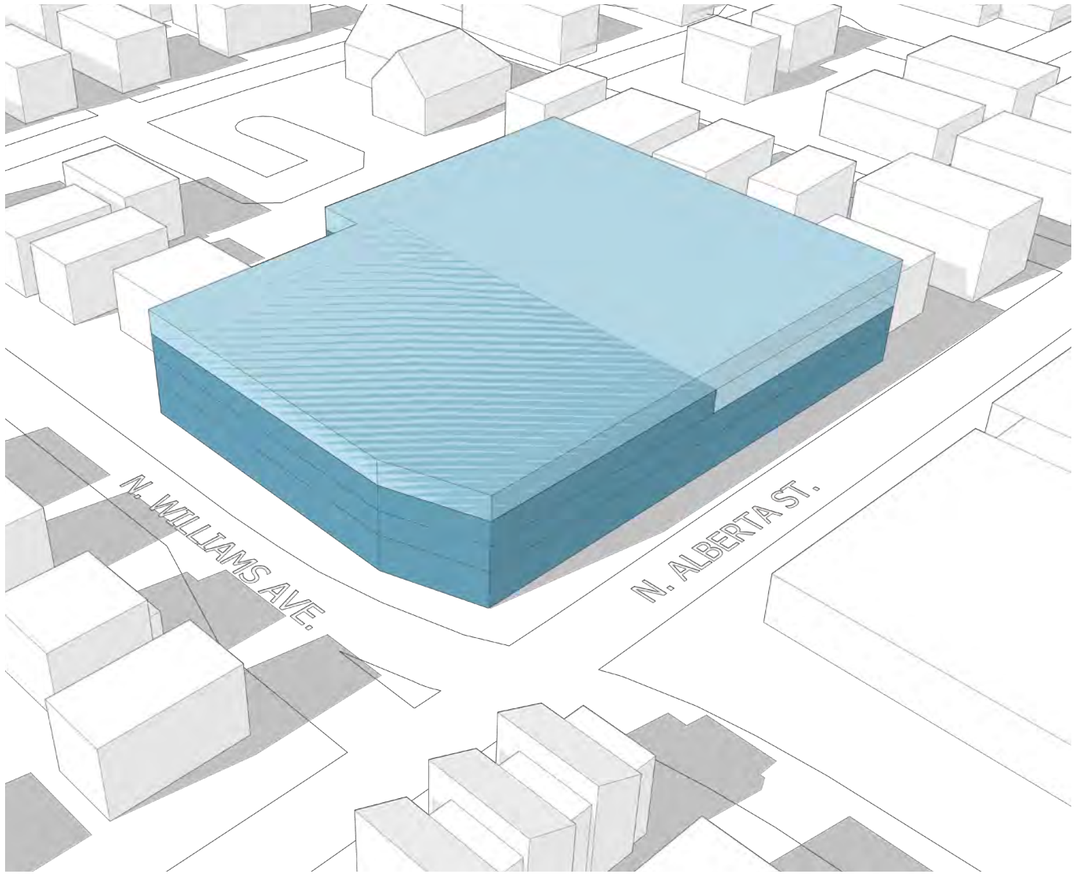

MAX FAR 2.5:1 = 103,040 GSF

BONUS FAR 1.5:1 = 61,825 GSF

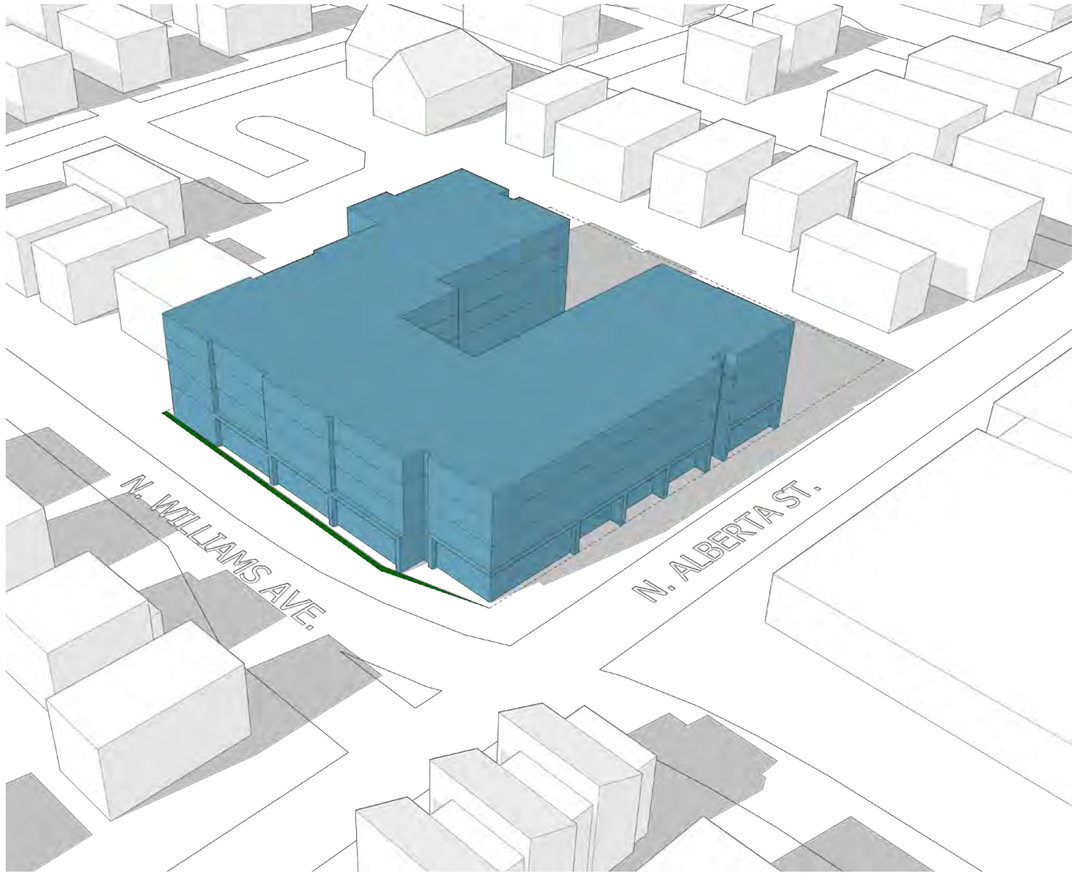

PROPOSED FAR 2.0:1 = 80,669 GSF

ROW DEDICATION

HOLST

© 2023 HOLST ARCHITECTURE INC.

STRONG PROPERTY

4931-4947 N WILLIAMS AVE
PORTLAND, OR 97217

DESIGN REVIEW

11.15.2023

title : FAR DIAGRAM

LU NO. LU 23-103655 DZ
Exhibit A6

sheet : APP.18

CALCULATED AREA

FACADE AREA

NORTH ELEVATION
1" = 20'-0"

REQUIRED		PROVIDED
40% OF AREA:	644 SF x 40% = **258 SF**	**266 SF**

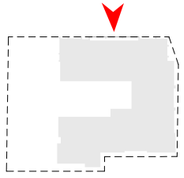

EAST ELEVATION
1" = 20'-0"

REQUIRED		PROVIDED
40% OF AREA:	1,257 SF x 40% = **503 SF**	**677 SF**

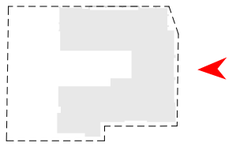

SCALE: 1" = 20' - 0"

0' 10' 20' 40'

© 2023 HOLST ARCHITECTURE INC.

HOLST

STRONG PROPERTY
4931-4947 N WILLIAMS AVE
PORTLAND, OR 97217

DESIGN REVIEW
11.15.2023

title : GROUND FLOOR WINDOWS

LU NO. LU 23-103655 DZ
Exhibit A6

sheet : **APP.19**

DAR - SUMMARY OF COMMENTS

CONTEXT

- **There is such a rich history in Albina to draw inspiration for the response to social and cultural significance.**

Response: The proposed design drew inspiration from the breadth and variety of cultural and social elements throughout the surrounding Albina neighborhood. The mass provides multiple interior and exterior areas of expression in large format art areas on both prominent N Alberta and N Williams facades. See C.8, C.11, App.2-App.12 for locations.

- **The project feels introverted and does not appear to represent the expressiveness of African American culture. Explore ways to incorporate moments of joy and exuberance through building details, color, landscaping, art, etc. The partnership with SEI provides a great opportunity to do so.**

Response: The proposed design provides numerous exterior and interior areas for joy and exuberance. With multiple locations for exterior art around the building. The art will be commissioned through SEI and their team that has experience throughout the Albina neighborhood of providing high quality culturally specific murals and art. The design of the courtyard provides numerous ways for families to interact with, explore and enjoy nature. See C.8, C.11, C.30, App.6 and App.12 for art locations and courtyard design.

- **The project's location on such a prominent corner at Williams and Alberta provides a great opportunity to provide art, which should be visible to the public.**

Response: The proposed ground floor design provides facades along both the SE and NW corners of the building dedicated for artwork. See C.8 and C.9 for locations and dimensions.

- **Courtyard presents a great canvas to incorporate a response to the water guideline. The response doesn't have to be excessive.**

Response: The design of the courtyard incorporates native and adapted planting for a rich botanical experience. Residents are connected to nature through intentional and interesting planting design with the native palette of the pacific northwest, as well as a unique nature play and exploration experience provided by an aggregate walkway with form derived from the abundance of creeks and streams in the Willamette valley. See C.30 and C.40 for proposed pathway features.

PUBLIC REALM

- **Residential ground floor units need to be designed to provide both comfort and safety for the residents and contribute to the activity and vibrancy along the sidewalk. Old and new residential in this area does this successfully by incorporating stoops, entrances, setbacks and landscape screening. When units are close to the street, the elevation above sidewalk grade is so important to create safe and vibrant frontages.**

Response: The proposed design includes individual patios for each of the (3) units along N. Alberta. The patios include a raised landscape planter to provide both comfort and safety to the residents. See C.5, C.43, App.10.

- **Given the shallow depth, at-grade condition of the proposed units, it was determined that a secured outdoor occupiable space with layered landscaping could provide screening and a buffer for the units while also engaging the ground floor program with the sidewalk. Individual unit front entrances with stoops are not critical so long as the space is occupiable.**

Response: The proposed design includes individual patios for each of the (3) units along N. Alberta. The patios include a raised landscape planter to provide screening and buffer the space. See C.5, C.43, App.10.

- **Some kind of small tree, like a vine maple or myrtle, with irrigation could be successful in a shaded landscape area like the ones in front the units.**

Response: The proposed design of the ground level units along N. Alberta (3) large patios that are separated from the sidewalk by 30 inch tall planters. The planters include a mix of ornamental and evergreen grasses, such as Japanese forest grass, lirioope, and sword fern. These plants range in height from 12 to 24 inches, in conjunction with the height of the planter, as a 42 to 54 inch screen from the sidewalk, providing visual interest for both the residents and pedestrians. See C.31, C.43, App.10.

- **The building as designed does not feel residential and is in need of a more outward expression of the interior use to create connections with the activity on the street. Balconies or Juliettes are successful at doing this.**

Response: The proposed design provides large (6 foot wide by 7 foot 6 inch tall) operable windows in all living spaces. This provides a residential feel to the units, and allows greater natural light into the living spaces. The window frame color was also changed to an adobe color, providing a lighter more residential experience. See C.8-C.13 and App.2-App.8.

- **Additional weather protection via canopies is needed along Williams Street, which is very active as a major pedestrian and bicycle corridor.**

Response: The proposed design includes (3) large canopies along N. Williams outside the community room, and one at the main entry corner that wraps from N. Williams to N. Alberta. See C.8, C.11, App.8.

- **An entrance is needed to access the community room from Williams to help activate this frontage.**

Response: The proposed design includes an entrance from the right-of-way to community room on N. Williams. See C.5.

- **The Williams' corner needs to be as prominent as possible with both entries and canopies.**

Response: The proposed design includes (3) large canopies along N. Williams outside of the community room. The SE corner which is required to house the water/fire rooms provides ground floor walls that will be used for artwork. See C.8, C.11, App.8, App.11.

- **More weather protection and another entrance on Williams would be more beneficial to the public realm than the small narrow landscape areas in front of the community room**.

Response: The proposed design includes (3) large canopies along N. Williams at the community room and provides a direct entrance from N. Williams to the community room. See C.5, C.8, C.11, App.8, App.11.

DAR - SUMMARY OF COMMENTS

- **The above-grade transformer in the parking lot if well screened with landscaping could be satisfactory.**

Response: The above grade transformer will be screened by layered landscaping to at least the L2 standard, with 3 foot height continuous evergreen shrubs and layered plantings. See C.32.

- **Focus on landscaping and seating opportunities in the furnishing zone to extend the use of the right-of-way for community room spill out area.**

Response: The proposed design includes additional covered seating outside the new community room entry, providing additional flexibility to the community room and extend the use of the right-of-way along N. Williams. See C.5, C.40-C.41, and App.11.

QUALITY & PERMANENCE

- **The overall concept of the massing, articulation, and limited quality materials are working well together. Depth in fenestrations and integration of louvers will need to contribute to the successes of the design.**

Response: Exterior insulation is being utilized on the project, allowing window openings to maintain at least 3 1/2 inches of depth. This provides depth across the entire facade. Louvers are integrated within the framework of window openings and side panels. Ground floor louvers are integrated above canopies wherever possible to reduce their visibility. See C.8 through C.13 for elevations and C.22 through C.28 for window and louver details.

- **The high contrast color scheme was noted as being predominant but was more successful than the red brick option on the Alberta volume shared at the meeting. Vibrancy, over color scheme, was noted as being key for the project, which could be part of the exterior at the ground plane or could come from the interior walls.**

Response: A high contrast color scheme is being provided. Materiality around the ground floor includes light storefront, stucco, and t&g cedar siding for warmth. The ground floor at both NW and SE corners of N. Alberta and N. Williams will be used for artwork. These ground floor locations will provide vibrancy in highly visible areas for both the public and residents to enjoy. See C.8 and C.11 elevations for locations of artwork.

- **Ceraclad is a high-quality material, albeit less so than brick. Recommendation to consider smooth finish over grooved for graffiti purposes.**

Response: All fiber cement products have been removed from both N. Alberta and N. Williams street frontages. An acrylic stucco system and t&g cedar are provided in these touch zones and will have anti-graffiti coatings. Where fiber cement material comes down to the ground floor at on-site locations, landscaping has been provided as a buffer. See C.8 through C.13 for elevations.

- **The landscape areas adjacent to the building and within the parking area need more diverse and layered landscaping to block headlights into units, but also maintain sight lines between walkway and parking lot. A shrub layer to 3 feet against parking stall combined with both small and large trees (limbed to 8') will provide screening for the residential units and shade in the parking area.**

Response: Diverse and substantial layered planting of trees, shrubs, and groundcovers will be provided between the parking lot and units to provide screening and privacy to the units while maintaining safe lines of sight. The planting area has been expanded to 5 foot 6 inches to allow room for layered plantings, with an additional 2 foot 6 inch planting bed at the building face. See C.32.

- **For trees in the parking area, placing them dead center in every other parking space provides good canopy coverage and an area through zone for people to pass from their car over to the walkway.**

Response: Parking area trees will be located thoughtfully with recognition given to the need for maximum shading and efficient circulation while maintaining compliance with the City of Portland's parking lot interior landscaping requirements. See C.32.

- **The depth of the landscape areas that buffer the parking from the adjacent residential units needs to be more developed with robust, large-scaled plantings.**

Response: The width of planting beds between the building and parking area have been maximized for a total of 8 feet of planting. This is sufficient to provide robust layered planting to screen unit windows from the parking area. Both large and small shrubs such as Japanese holly (42 inch height), flowering Bennet's white rock rose (36 inch height), and evergreen Pacific wax myrtle (up to 72 inch height) will be distributed intentionally to provide an interesting, layered planting that will provide privacy to ground floor units. Provided planting will be diverse and dense, at minimum meeting density provided in the Portland landscape manual P1 interior landscaping requirement, and often exceeding it. Robust evergreen groundcovers are also provided strategically to provide visual relief in planting and to foster a diversity in planting height. See C.32 and C.42-C.43.

- **Look at the landscape buffer and screening along south property line to ensure it is robust enough to provide privacy to the adjacent property.**

Response: The south property line will be screened to an L3 standard wherever possible, including a 6 foot height evergreen shrubs. Shrub and groundcover planting will fill the remainder of the area between the property line and building face to provide further buffering. Additionally, a sight obscuring 'good neighbor' fence is provided along the south property line. See C.32 and C.42.

VEGA
CIVIL ENGINEERING LLC

Preliminary Stormwater Report

Strong Property Housing

4947 N Williams Street
Portland, OR 97217

Date:
November 13th, 2023

Owner:
Strong Property
Portland, OR

Associated Permit Numbers:
2023-033320-000-00-EA

Engineer of Record:
Martha Williamson, PE
Vega Civil Engineering, LLC
1300 SE Stark St #201
Portland, OR 97214
martha@vegacivil.com
(503) 662-1901

I hereby certify that this Stormwater Management Report for Strong Property Housing has been prepared by me or under my supervision and meets minimum standards of the City of Portland and normal standards of engineering practice. I hereby acknowledge that the jurisdiction does not and will not assume liability for the sufficiency, suitability, or performance of drainage facilities designed by me.

EXPIRES 6–30–2024

Table of Contents

Project Overview & Description	2
Methodology	2
Analysis	3
Engineering Conclusions	3

Appendices

A Stormwater Facility Details / Exhibits
- Utility Plan
- Catchment Map
- Drywell Detail

B Calculations
- HydroCAD Report

C Associated Reports
- Geotechnical Investigation Report

Project Overview and Description

Location	4947 N Williams Avenue
Site Area	40,911 SF
Vicinity Map	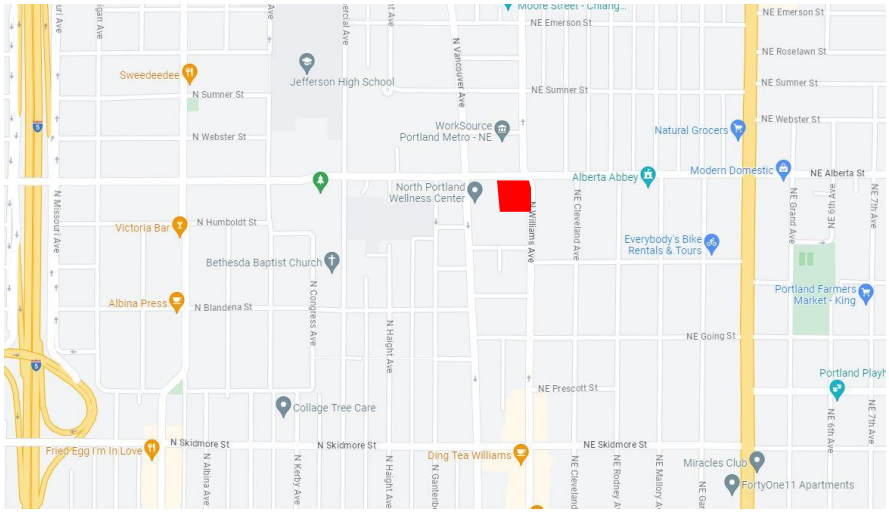
Zoning	CM2 – Commercial Mixed-Use 2
Development Type	Affordable Housing
Watershed	Willamette River – Holladay-Sullivan
Existing Conditions	Existing site includes an existing single family residential building, general landscaping with paved walkways and a driveway.
Development Description	New construction of affordable housing with 75 units and site improvements.

Methodology

Existing Drainage	The existing site drains north and east in the paved surfaces. Stormwater sheet flows to the ROW.
Infiltration Testing Results	Geotechnical investigation found an unfactored infiltration rate far exceeding 100 in/hr. A factor of safety of 2 has been applied to result in a design infiltration rate of 50 in/hr.
Stormwater Hierarchy Justification	The 100-year storm will be fully infiltrated onsite via a single deep drywell, which will fall under Category 2 of the Stormwater Hierarchy.
Proposed Stormwater Management System	Stormwater runoff from proposed impervious and landscape areas of the site will be collected via area drains and downspouts and piped to a sedimentation manhole; water will then infiltrate via a drywell system.

Analysis

Relevant Design Storms	10yr – 3.4 inches 100yr – 4.4 inches
Computation Methods & Software	HydroCAD was used for sizing the stormwater facilities.
Safety Factors	A safety factor of 2 was used for the tested infiltration rate.
Curve Numbers	A CN of 98 was used for the entire site as it is primarily impervious area.
Time of Concentration	5 min.
Escape Route or Inundation Level for 24-hour 100-yr event	The drywell system has been designed to fully infiltrate the 100-year storm event.

Table 1 – Catchment and Facility Summary

Catchment or Facility ID	Impervious Area Type	Area (sf)	Ownership (private/public)	Facility Type	Facility Size (sf)
Site	Roof, parking lot and walkways	40,911	Private	Drywell	(1) x 48" dia. x 40' overall depth

Engineering Conclusions

Water Quality	The proposed development will meet the requirements for water quality per the 2020 City of Portland Stormwater Management Manual
Water Quantity	The proposed development will meet the requirements for water quantity per the 2020 City of Portland Stormwater Management Manual
Upstream / Downstream Impacts	The proposed development will not have an impact on upstream or downstream systems.

Appendix A - Stormwater Facility Details / Exhibits

Utility Plan
Catchment Map
Drywell Detail

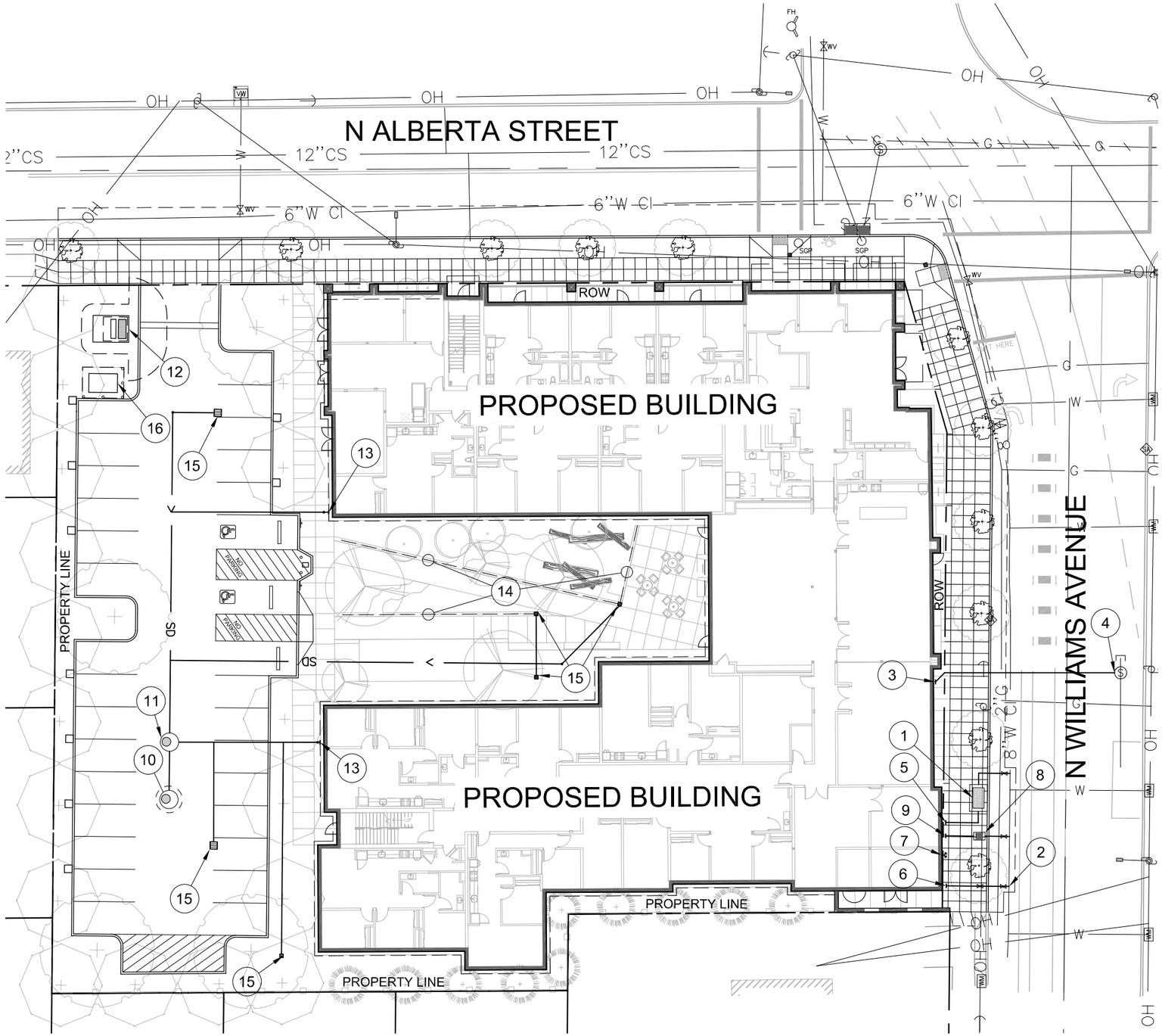

UTILITY PLAN

SCALE: 1"=30'

CONSTRUCTION NOTES

1. NEW 4" WATER METER, BY PORTLAND WATER BUREAU.
2. NEW X" FIRE LINE, BY PORTLAND WATER BUREAU.
3. NEW SANITARY CONNECTION FROM BUILDING
4. 10" SEWER CONNECTION TO COMBINED SEWER MAINTENANCE HOLE.
5. X" DOMESTIC WATER CONNECTION TO BUILDING. PREMISES-ISOLATION (PI) DCVA TO BE INSTALLED IN BUILDING PER WATER BUREAU REQUIREMENTS.
6. X" FIRE CONNECTION TO BUILDING. PREMISES-ISOLATION (PI) DCDA TO BE INSTALLED IN BUILDING PER WATER BUREAU REQUIREMENTS.
7. FIRE DEPARTMENT CONNECTION MOUNTED TO BUILDING FACE.
8. IRRIGATION METER, BY PORTLAND WATER BUREAU.
9. IRRIGATION CONNECTION TO BUILDING. PREMISES-ISOLATION (PI) DCDA TO BE INSTALLED IN BUILDING PER WATER BUREAU REQUIREMENTS.
10. DRYWELL, 10' PERFORATED SECTION, 40' TOTAL DEPTH
11. SEDIMENT MANHOLE, 10' TOTAL DEPTH.
12. PP&L PAD-MOUNTED TRANSFORMER VAULT.
13. STORM CONNECTION FROM BUILDING FOR ROOF DRAINAGE.
14. FRENCH DRAIN.
15. AREA DRAIN.
16. PAD-MOUNTED BATTERY ENERGY STORAGE SYSTEM.

STORMWATER NARRATIVE

PRIVATE SITE

STORMWATER RUNOFF FROM PROPOSED ROOF AND PAVED SURFACES WILL BE DIRECTED TO THE DRYWELL SYSTEM. THE DRYWELL SYSTEM IS DESIGNED TO FULLY INFILTRATE THE 100-YR STORM EVENT.

PUBLIC STREET IMPROVEMENTS

STORMWATER RUNOFF IN THE PUBLIC RIGHT-OF-WAY FOLLOWS THE EXISTING DRAINAGE PATTERN AND IS COLLECTED VIA NEW CATCH BASINS AND DIRECTED TO THE PUBLIC COMBINED SEWER SYSTEM.

UTILITY CONTACTS

ELECTRICAL
CLEO NARANJO
INTERFACE ENGINEERING, INC
CLEON@INTERFACEENG.COM
(503) 382-2724

BES
ROD KRAUTER
BUREAU OF ENVIRONMENTAL SERVICES
RODNEY.KRAUTER@PORTLANDOREGON.GOV
(503) 823-2073

WATER
KARI ANN SPOON
PORTLAND WATER BUREAU
KARIANN.SPOON@PORTLANDOREGON.GOV
(503) 865-6370

N

0 30 60

1 INCH = 30 FEET

HOLST

STRONG PROPERTY HOUSING
4931-4947 N WILLIAMS AVE
PORTLAND, OR 97217

job no. 23-004

VEGA
CIVIL ENGINEERING LLC
503.662.1901 | WWW.VEGACIVIL.COM

11/13/23

title: UTILITY PLAN

sheet: C1.00

LU 23-103655 DZ
Exhibit A7

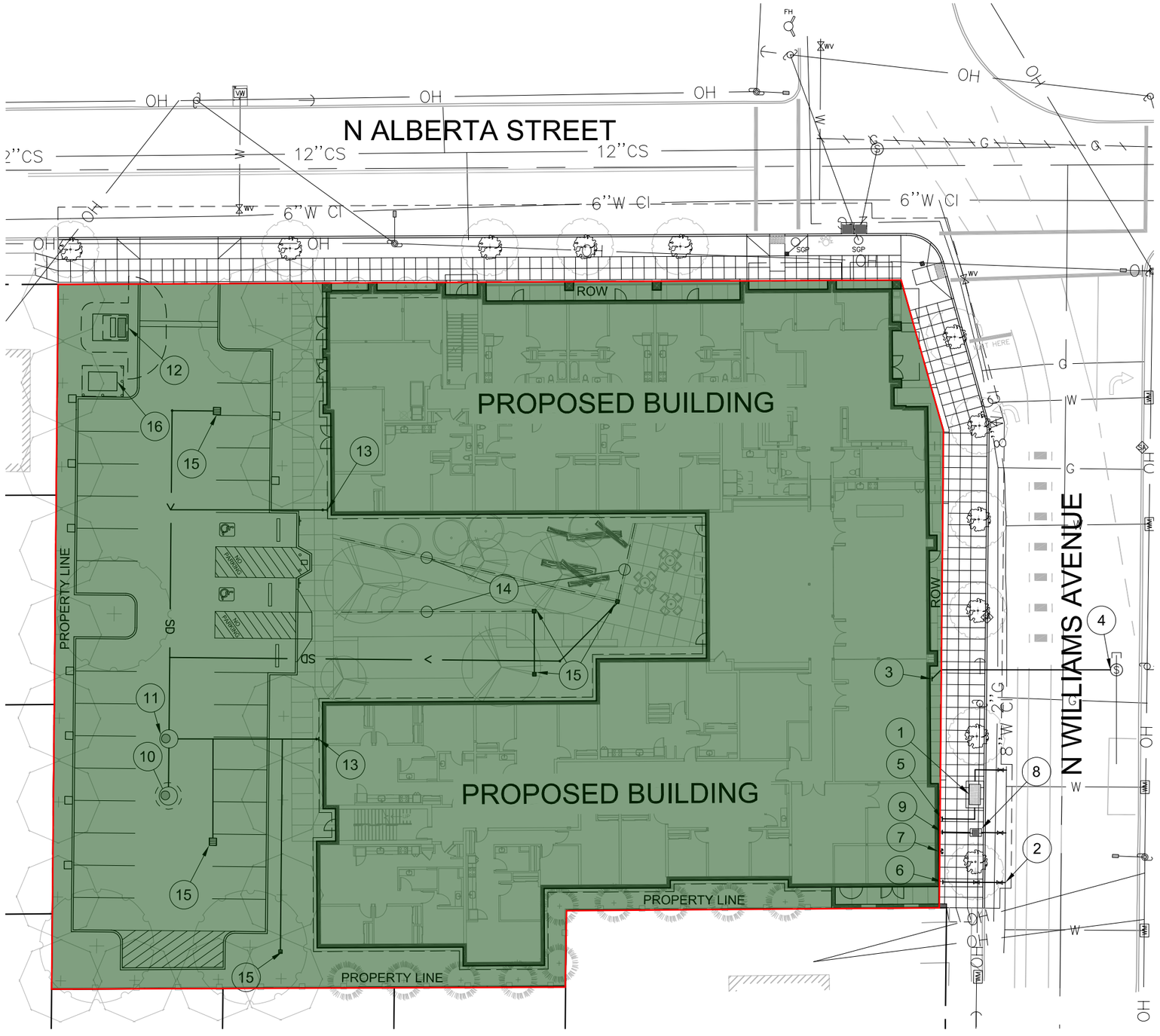

UTILITY PLAN

SCALE: 1"=30'

CATCHMENT AREA = 40,911 SF (CN=98)

CONSTRUCTION NOTES

1. NEW 4" WATER METER, BY PORTLAND WATER BUREAU.
2. NEW X" FIRE LINE, BY PORTLAND WATER BUREAU.
3. NEW SANITARY CONNECTION FROM BUILDING
4. 10" SEWER CONNECTION TO COMBINED SEWER MAINTENANCE HOLE.
5. X" DOMESTIC WATER CONNECTION TO BUILDING. PREMISES-ISOLATION (PI) DCVA TO BE INSTALLED IN BUILDING PER WATER BUREAU REQUIREMENTS.
6. X" FIRE CONNECTION TO BUILDING. PREMISES-ISOLATION (PI) DCDA TO BE INSTALLED IN BUILDING PER WATER BUREAU REQUIREMENTS.
7. FIRE DEPARTMENT CONNECTION MOUNTED TO BUILDING FACE.
8. IRRIGATION METER, BY PORTLAND WATER BUREAU.
9. IRRIGATION CONNECTION TO BUILDING. PREMISES-ISOLATION (PI) DCDA TO BE INSTALLED IN BUILDING PER WATER BUREAU REQUIREMENTS.
10. DRYWELL, 10' PERFORATED SECTION, 40' TOTAL DEPTH
11. SEDIMENT MANHOLE, 10' TOTAL DEPTH.
12. PP&L PAD-MOUNTED TRANSFORMER VAULT.
13. STORM CONNECTION FROM BUILDING FOR ROOF DRAINAGE.
14. FRENCH DRAIN.
15. AREA DRAIN.
16. PAD-MOUNTED BATTERY ENERGY STORAGE SYSTEM.

STORMWATER NARRATIVE

PRIVATE SITE

STORMWATER RUNOFF FROM PROPOSED ROOF AND PAVED SURFACES WILL BE DIRECTED TO THE DRYWELL SYSTEM. THE DRYWELL SYSTEM IS DESIGNED TO FULLY INFILTRATE THE 100-YR STORM EVENT.

PUBLIC STREET IMPROVEMENTS

STORMWATER RUNOFF IN THE PUBLIC RIGHT-OF-WAY FOLLOWS THE EXISTING DRAINAGE PATTERN AND IS COLLECTED VIA NEW CATCH BASINS AND DIRECTED TO THE PUBLIC COMBINED SEWER SYSTEM.

UTILITY CONTACTS

ELECTRICAL
CLEO NARANJO
INTERFACE ENGINEERING, INC
CLEON@INTERFACEENG.COM
(503) 382-2724

BES
ROD KRAUTER
BUREAU OF ENVIRONMENTAL SERVICES
RODNEY.KRAUTER@PORTLANDOREGON.GOV
(503) 823-2073

WATER
KARI ANN SPOON
PORTLAND WATER BUREAU
KARIANN.SPOON@PORTLANDOREGON.GOV
(503) 865-6370

N

0 30 60

1 INCH = 30 FEET

HOLST

STRONG PROPERTY HOUSING
4931-4947 N WILLIAMS AVE
PORTLAND, OR 97217

job no. 23-004

VEGA CIVIL ENGINEERING LLC
503.662.1901 | WWW.VEGACIVIL.COM

11/13/23

title: UTILITY PLAN

sheet: C1.00

LU 23-103655 DZ
Exhibit A7

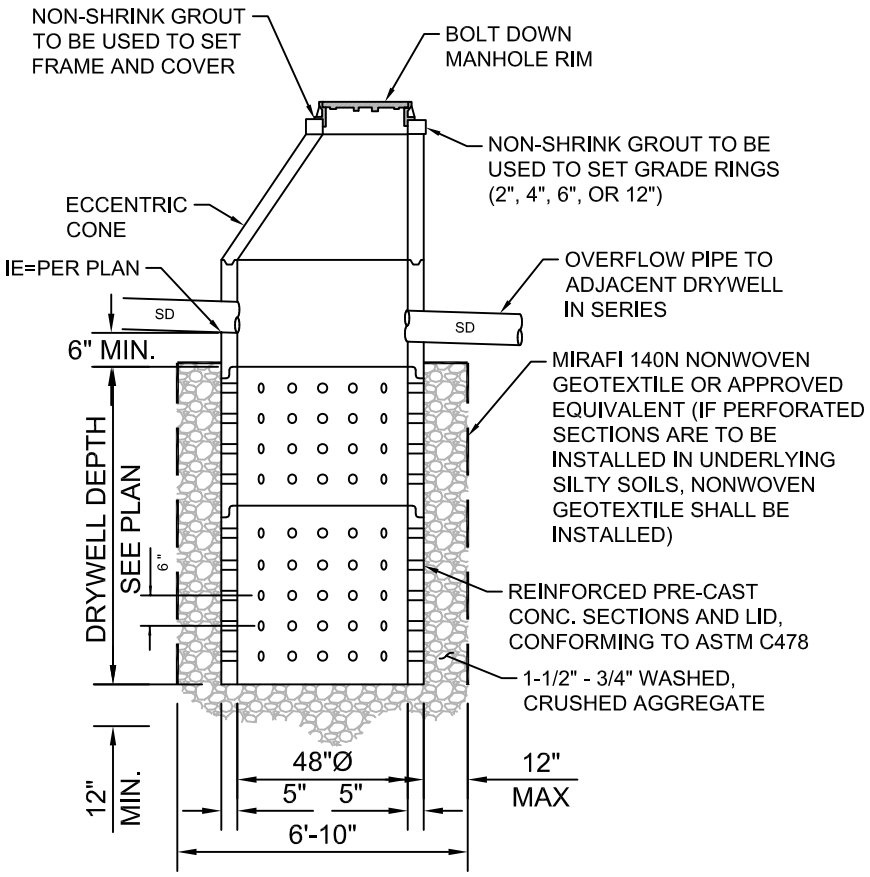

DRYWELL TESTING NOTES

1. DRYWELL(S) SHALL BE TESTED AFTER CONSTRUCTION OF THE DRYWELL STRUCTURE (INCLUDING DRAIN ROCK AND PERIMETER BACKFILL) BUT PRIOR TO THE CONSTRUCTION OF THE TOP SLAB AND FINISH BACKFILL.
2. NOTIFY CIVIL AND GEOTECHNICAL ENGINEERS 7 DAYS PRIOR TO TESTING AND PROVIDE WRITTEN PLAN FOR TESTING INCLUDING WATER SOURCE.

DRYWELL

NTS

Appendix B - Calculations

HydroCAD Report

Summary for Pond 2P: Deep Drywell

Inflow Area = 40,911 sf,100.00% Impervious, Inflow Depth > 4.16" for 100yr event
Inflow = 0.99 cfs @ 7.80 hrs, Volume= 14,197 cf
Outflow = 0.79 cfs @ 7.85 hrs, Volume= 14,167 cf, Atten= 21%, Lag= 2.8 min
Discarded = 0.79 cfs @ 7.85 hrs, Volume= 14,167 cf

Routing by Stor-Ind method, Time Span= 0.00-24.00 hrs, dt= 0.05 hrs
Peak Elev= 139.77' @ 8.02 hrs Surf.Area= 37 sf Storage= 716 cf

Plug-Flow detention time= 10.1 min calculated for 14,138 cf (100% of inflow)
Center-of-Mass det. time= 8.4 min (662.0 - 653.6)

Volume	Invert	Avail.Storage	Storage Description
#1	100.00'	217 cf	**6.83'D x 30.00'H Vertical Cone/Cylinder** 1,099 cf Overall - 377 cf Embedded = 722 cf x 30.0% Voids
#2	100.00'	377 cf	**4.00'D x 30.00'H Vertical Cone/Cylinder**Inside #1
#3	130.00'	126 cf	**4.00'D x 10.00'H Vertical Cone/Cylinder**Impervious
		719 cf	Total Available Storage

Device	Routing	Invert	Outlet Devices
#1	Discarded	100.00'	**50.000 in/hr Exfiltration over Wetted area**

Discarded OutFlow Max=0.79 cfs @ 7.85 hrs HW=132.46' (Free Discharge)
1=Exfiltration (Exfiltration Controls 0.79 cfs)

Pond 2P: Deep Drywell

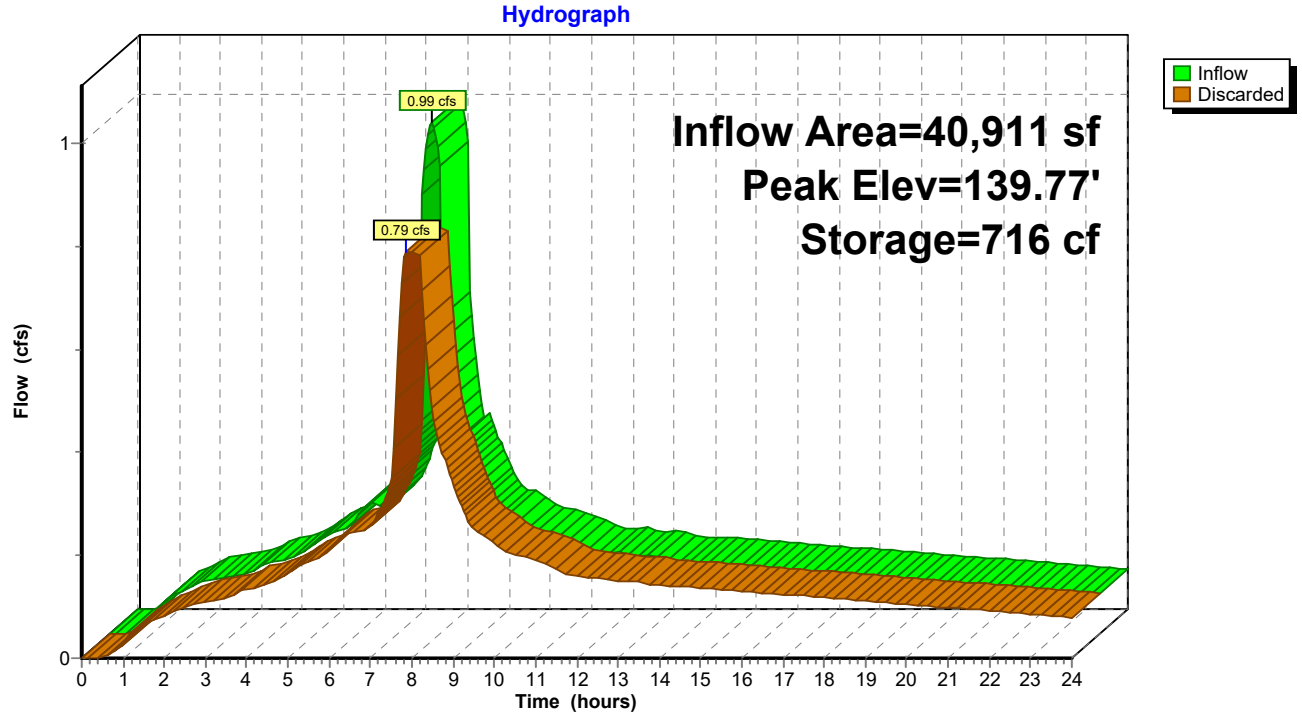

Appendix C – Associated Report

Geotechnical Report

Carlson Geotechnical

A division of Carlson Testing, Inc.
Phone: (503) 601-8250
www.carlsontesting.com

Bend Office	**(541) 330-9155**
Eugene Office	**(541) 345-0289**
Salem Office	**(503) 589-1252**
Tigard Office	**(503) 684-3460**

Report of
Geotechnical Investigation & Infiltration Testing
Strong Property - North Portland
4931 North Williams Avenue
Portland, Oregon

CGT Project Number G2305938

Prepared for

James Lee
Community Development Partners
126 NE Alberta Street, Suite 202
Portland, Oregon, 97211

August 7, 2023

Carlson Geotechnical

A division of Carlson Testing, Inc.
Phone: (503) 601-8250
www.carlsontesting.com

Bend Office (541) 330-9155
Eugene Office (541) 345-0289
Salem Office (503) 589-1252
Tigard Office (503) 684-3460

August 7, 2023

James Lee
Community Development Partners
126 NE Alberta Street, Suite 202
Portland, Oregon, 97211

Report of
Geotechnical Investigation & Infiltration Testing
Strong Property - North Portland
4931 North Williams Avenue
Portland, Oregon

CGT Project Number G2305938

Dear James Lee:

Carlson Geotechnical (CGT), a division of Carlson Testing, Inc. (CTI), is pleased to submit this report summarizing the results of our geotechnical investigation and infiltration testing for the proposed Strong Property project. The site spans five parcels located at the southwest quadrant of the intersection of North Williams Avenue and North Alberta Street in Portland, Oregon. The parcels consist of Tax Lots 114, 106, 20, and 4931-4947. We performed our work in general accordance with CGT Proposal GP23-137, dated June 9, 2023. Written authorization for our services was received on June 16, 2023.

We appreciate the opportunity to work with you on this project. Please contact us at (503) 601-8250 if you have any questions regarding this report.

Respectfully Submitted,
CARLSON GEOTECHNICAL

REGISTERED PROFESSIONAL ENGINEER
70772PE
OREGON
Jan. 10, 2007
BRAD MICHAEL WILCOX
EXPIRES: 6/30/2024

Ariana Tenold, G.I.T.
Geotechnical Project Manager
atenold@carlsontesting.com

Brad M. Wilcox, P.E., G.E.
Principal Geotechnical Engineer
bwilcox@carlsontesting.com

Doc ID: G:\GEOTECH\PROJECTS\2023 Projects\G2305938 - Strong Property\G2305938 - GEO\008 - Deliverables\Report\G2305938 Geotechnical Investigation.docx

TABLE OF CONTENTS

1.0 INTRODUCTION 4
1.1 Project Information 4
1.2 Scope of Services 4
2.0 SITE DESCRIPTION 5
2.1 Site Geology 5
2.2 Site Surface Conditions 5
2.3 Subsurface Conditions 6
3.0 SEISMIC CONSIDERATIONS 8
3.1 Seismic Design 8
3.2 Seismic Hazards 8
4.0 CONCLUSIONS 10
4.1 Undocumented Fills 10
4.2 Subgrade Moisture Sensitivity 11
5.0 RECOMMENDATIONS 11
5.1 Site Preparation 11
5.2 Temporary Excavations 12
5.3 Wet Weather Considerations 13
5.4 Structural Fill 14
5.5 Shallow Foundations 16
5.6 Rigid Retaining Walls 18
5.7 Floor Slabs 19
5.8 Pavements 20
5.9 Additional Considerations 21
6.0 RECOMMENDED ADDITIONAL SERVICES 21
6.1 Design Review 21
6.2 Observation of Construction 21
7.0 LIMITATIONS 22

ATTACHMENTS

Site Location ..... Figure 1
Site Plan ..... Figure 2
Site Photographs ..... Figure 3
Retaining Wall Static and Seismic Pressure Distribution ..... Figure 4
Retaining Wall Surcharge Pressure Distribution ..... Figure 5

Subsurface Investigation and Laboratory Testing ..... Appendix A
Results of Infiltration Testing ..... Appendix B

1.0 INTRODUCTION

Carlson Geotechnical (CGT), a division of Carlson Testing, Inc. (CTI), is pleased to submit this report summarizing the results of our geotechnical investigation and infiltration testing for the proposed Strong Property project. The site spans five parcels located at the southwest quadrant of the intersection of North Williams Avenue and North Alberta Street in Portland, Oregon, as shown on the attached Site Location, Figure 1.

1.1 Project Information

CGT developed an understanding of the proposed project based on our correspondence with our client and project documents provided to us on June 2, 2023. Based on our review, we understand the project will include:

- Demolition of the existing residence within one of the tax lots (20 North Alberta Street, Portland).
- Construction of a new apartment building within the east portion of the overall development site. The building will be four stories, wood-framed, and incorporate a slab on grade ground floor. No below-grade levels (basements) are proposed. For the purposes of this report, we have assumed maximum column, continuous wall, and uniform floor slab loads will be on the order of 60 kips, 4 kips per lineal foot (klf), and 200 pounds per square foot (psf), respectively.
- Construction of a paved parking lot and installation of appurtenant underground utilities to serve the new building within the west portion of the site.
- Although no stormwater management plans have been provided, we understand that stormwater collected from new impervious areas of the site will be disposed of, at least in part, via onsite infiltration. Design of infiltration facility(ies) will rest with others. Two infiltration tests were requested as part of this assignment.
- Although no grading plans have been provided, we anticipate permanent grade changes at the relatively level site will be minimal, with maximum cuts and fills on the order of 2 feet in depth.

1.2 Scope of Services

Our scope of work included the following:

- Contact the Oregon Utilities Notification Center to mark the locations of public utilities within a 20-foot radius of our explorations at the site. CGT also subcontracted a private utility locator service to mark the locations of detectable private utilities within the same radius.
- Explore subsurface conditions at the site by advancing six drilled borings to depths of approximately 6½ to 51½ feet below ground surface (bgs). Details of the subsurface investigation are presented in Appendix A.
- Conduct infiltration testing in two of the borings. Results of the infiltration testing are presented in Appendix B.
- Classify the soils encountered in the explorations in general accordance with ASTM D2488 (Visual-Manual Procedure).
- Provide a technical narrative describing surface and subsurface deposits, and local geology of the site, based on the results of our explorations and published geologic mapping.
- Provide recommendations for the Seismic Site Class, mapped maximum considered earthquake spectral response accelerations, and site seismic coefficients.

- Provide a qualitative evaluation of seismic hazards at the site, including earthquake-induced liquefaction, landsliding, and surface rupture due to faulting or lateral spread.
- Provide geotechnical recommendations for site preparation and earthwork.
- Provide geotechnical engineering recommendations for use in design and construction of shallow foundations, floor slabs, and pavements.
- Provide this written report summarizing the results of our geotechnical investigation and recommendations for the project.

2.0 SITE DESCRIPTION

2.1 Site Geology

Based on available geologic mapping of the area, the site is underlain by Pleistocene catastrophic flood deposits[1] originating from glacial outburst floods of Lake Missoula. The flood deposits were produced by the periodic failure of glacial ice dams that impounded Lake Missoula in present day Montana between 18,000 to 15,000 years ago[2]. Floodwaters raged through Idaho, eastern Washington, and through the Columbia River Gorge. Near Rainier, Oregon, the river channel was restricted, causing floodwaters to back up the Willamette Valley as far south as Eugene. Floodwaters in the Portland area were as much as 400 feet deep, leaving only the tops of the tallest hills dry. The flood deposits are typically split into three different facies: the coarse-grained facies, the fine-grained facies, and the channel facies. The site is mapped in the fine-grained facies. The fine-grained Missoula flood deposits typically consist of silt, clay, and fine- to coarse-grained sand. Beds are generally poorly defined and thin (less than 3 feet thick). Composite thickness is typically up to 115 feet; however, thickness in the vicinity of the site is about 90 feet[3].

The flood deposits are underlain by the Miocene-Pliocene Troutdale Formation[4]. The Troutdale Formation consists of layers of poorly lithified sediments, including silt, clay, sand, gravel, cobbles, and boulders deposited by ancestral rivers draining off the western Cascades and reworked by later streams and rivers. These sediments are friable to moderately strong deposits of pebbles and cobble conglomerate, as well as interbeds of sandstone, siltstone, and claystone. The gravel predominantly consists of mafic volcanic cobbles and pebbles, as well as characteristic white to yellow to red, well-rounded, quartzite clasts. Bed thickness ranges from about 60 to 275 feet, with a total formation thickness upwards of 1,100 feet.

2.2 Site Surface Conditions

The overall, approximate 0.8-acre site consisted of five adjacent tax lots. During the time of our field investigation, the site was bordered by residential properties and a church to the south and west, Alberta Street to the north, and Williams Avenue to the east. The relatively level site was occupied by an existing residential structure (to be removed) and a concrete retaining wall (to be removed). The remainder of the site was vegetated with short grasses, some blackberry brambles, and scattered trees. Site layout and surface

---

1 Madin, I.P., 2004. Geologic mapping and database for the Portland area fault studies: Final report, Clackamas, Multnomah, and Washington Counties, Oregon: Oregon Department of Geology and Mineral Industries, Open-File Report O-04-02, scale 1:100,000.

2 Allen, John Eliot, Burns, Marjorie, and Burns, Scott, 2009. Cataclysms on the Columbia, The Great Missoula Floods, Revised Second Edition: Ooligan Press, Portland State University.

3 Madin, Ian P., 1990. Earthquake Hazard Geology of the Portland metropolitan area, Oregon. Oregon Department of Geology and Mineral Industries Open File Report 90-2.

4 Beeson, M.H., 1989, Geologic Map of the Portland Quadrangle, Multnomah and Washington Counties, Oregon, and Clark County, Washington, State of Oregon Department of Geology and Mineral Industries, GMS-75.

conditions at the time of our field investigation are shown on the attached Site Plan (Figure 2) and Site Photographs (Figure 3).

2.3 Subsurface Conditions

2.3.1 Subsurface Investigation & Laboratory Testing

Our subsurface investigation consisted of six drilled borings (B-1 through B-6) completed on July 28, 2023. The approximate exploration locations are shown on the Site Plan, attached as Figure 2. In summary, the borings were advanced to depths ranging from about 6½ to 51½ feet bgs. Details regarding the subsurface investigation, logs of the explorations, and results of laboratory testing are presented in Appendix A. Subsurface conditions encountered during our investigation are summarized below.

2.3.2 Subsurface Materials

Logs of the explorations are presented in Appendix A. The following describes each of the subsurface materials encountered at the site.

2.3.2.1 Undocumented Fill

Undocumented fill was encountered at the surface of boring B-2 through B-6. Undocumented fill refers to materials placed without (available) records of subgrade conditions or evaluation of compaction. The specific types of undocumented fill observed at the site are described in the following paragraphs:

Undocumented Organic Soil Fill (OL Fill)
Undocumented organic soil fill was encountered at the surface of borings B-2 through B-6. This material was typically brown, moist, exhibited low plasticity, contained abundant rootlets, and subangular gravel up to ½-inch in diameter. This fill soil extended to a depth of about ¼ to ½ foot bgs.

Undocumented Poorly Graded Sand Fill (SP Fill)
Underlying the organic soil fill in B-5 was undocumented poorly graded sand fill. This material was typically dark gray, moist, fine- to coarse grained and contained trace fines. An approximate 2-foot void was encountered at 5 feet bgs during our soil sampling within this boring. This fill soil extended to a depth of about 12 feet bgs.

Undocumented Silt Fill (ML Fill)
Underlying the organic soil fill in B-2 and B-3 was undocumented silt fill. This material was typically brown, moist, exhibited low plasticity, and contained a varying amount of sand and gravel fragments up to ½-inch in diameter. This fill soil extended to depths of about 1½ and 5 feet bgs in borings B-2 and B-5, respectively.

Undocumented Lean Clay with Gravel Fill (CL Fill)
Underlying the silt fill in B-3 was undocumented lean clay with gravel fill. This material was typically dark gray, moist, exhibited medium plasticity, contained varying amounts of sand and gravel fragments up to ½-inch in diameter, and exhibited a slight petroleum odor. This fill soil extended to a depth of about 11 feet bgs in that boring.

LU 23-208655 GW
Exhibit A7

2.3.2.2 Topsoil

Organic Soil (OL)

Organic soil was encountered at the surface of boring B-1. This material was typically brown, moist, exhibited low plasticity, contained abundant rootlets, and extended to depths of about ½ -foot bgs.

2.3.2.3 Fine-Grained Flood Deposits

Underlying the organic soil in boring B-1, and the fill soils in B-2 through B-6 was native silt with sand to sandy silt (ML) and poorly graded sand to sand with silt (SP, SM). These alluvial soils are consistent with the fine-grained flood deposits mapped in the vicinity of the site and described in Section 2.1. The specific types of fine-grained flood deposits observed at the site are described in the following paragraphs:

Silt with Sand to Sandy Silt (ML)

Underlying the organic soil in boring B-1 and the undocumented fill in B-6 was native silty soil. This soil was typically medium stiff, light brown to brown/gray, moist, exhibited low to medium plasticity, and contained varying amounts of fine- to coarse-grained sand. This soil extended to depths of about 3½ feet bgs in B-1, and extended the full depth explored in B-6, approximately 6½ feet bgs.

Poorly Graded Sand to Silty Sand (SP, SM)

Underlying the undocumented fill in borings B-2 through B-5, and underlying the native silt with sand in boring B-1 was native, sandy soil. This soil was typically medium dense to very dense, brown to dark gray, moist, fine- to coarse-grained and contained varying amounts of rounded gravel up to ½-inch in diameter. The native sandy soil extended to the full depths explored in B-1 through B-5, 6½ to 51½ feet bgs, respectively.

2.3.3 Groundwater

Borings B-1 through B-3, and B-5 were advanced using the mud rotary (wet) drilling method, which precluded direct observation of groundwater during advancement of the borings. Borings B-4 and B-6 were advanced using the hollow-stem auger method and we did not encounter any groundwater within the depths explored on July 28, 2023.

To determine approximate regional groundwater levels in the area, we researched well logs available on the Oregon Water Resources Department (OWRD)[5] website for wells located within Section 22, Township 1 North, Range 1 East, Willamette Meridian. Our review indicated that groundwater levels in the area generally ranged from about 155 to 165 feet bgs. It should be noted groundwater levels vary with local topography. In addition, the groundwater levels reported on the OWRD logs often reflect the purpose of the well, so water well logs may only report deeper, confined groundwater, while geotechnical or environmental borings will often report any groundwater encountered, including shallow, unconfined groundwater. Therefore, the levels reported on the OWRD well logs referenced above are considered generally indicative of local water levels and may not reflect actual groundwater levels at the project site. We anticipate that groundwater levels will fluctuate due to seasonal and annual variations in precipitation, changes in site utilization, or other factors

[5] Oregon Water Resources Department, 2023. Well Log Records, *accessed June 2023*, from OWRD web site: http://apps.wrd.state.or.us/apps/gw/well_log/.

In addition to reviewing well logs, we also reviewed the Portland depth to groundwater mapping[6] which indicated groundwater is present at depths of 145 feet bgs in the vicinity of the site. It should be noted that the levels reported by the referenced map are average values for a given location and incorporate a degree of uncertainty. For this location the uncertainty is described as "moderate."

3.0 SEISMIC CONSIDERATIONS

3.1 Seismic Design

Section 1613.2.2 of the 2022 Oregon Structural Specialty Code (2022 OSSC) requires that the determination of the seismic site class be in accordance with Chapter 20 of the American Society of Civil Engineers Minimum Design Loads for Buildings and Other Structures (ASCE 7-16). We have assigned the site as Site Class D ("Stiff Soil") based on geologic mapping and subsurface conditions encountered during our investigation.

Earthquake ground motion parameters for the site were obtained in accordance with the 2022 OSSC using the Seismic Hazards by Location calculator on the ATC website[7]. The site Latitude 45.558812° North and Longitude 122.667371° West were input as the site location. The following table shows the recommended seismic design parameters for the site.

Table 1 Seismic Ground Motion Values

Parameter		Value
Mapped Acceleration Parameters	Spectral Acceleration, 0.2 second (S_s)	0.870g
	Spectral Acceleration, 1.0 second (S_1)	0.390g
Coefficients (Site Class D)	Site Coefficient, 0.2 second (F_A)	1.152
	Site Coefficient, 1.0 second (F_V)[1]	1.910
Adjusted MCE Spectral Response Parameters	MCE Spectral Acceleration, 0.2 second (S_{MS})	1.002g
	MCE Spectral Acceleration, 1.0 second (S_{M1})	0.745g
Design Spectral Response Accelerations	Design Spectral Acceleration, 0.2 second (S_{DS})	0.668g
	Design Spectral Acceleration, 1.0 second (S_{D1})	0.497g
Seismic Design Category (Risk Category II)		D

[1] Value determined from 2022 OSSC Table 1613.2.3(2).

3.2 Seismic Hazards

3.2.1 Liquefaction

In general, liquefaction occurs when deposits of loose/soft, saturated, cohesionless soils, generally sands and silts, are subjected to strong earthquake shaking. If these deposits cannot drain quickly enough, pore water pressures can increase, approaching the value of the overburden pressure. The shear strength of a cohesionless soil is directly proportional to the effective stress, which is equal to the difference between the overburden pressure and the pore water pressure. When the pore water pressure increases to the value of

[6] Snyder, D.T., 2008, Estimated depth to ground water and configuration of the water table in the Portland, Oregon area: U.S. Geological Survey, Scientific Investigations Report SIR-2008-5059, scale 1:60,000.

[7] Applied Technology Council (ATC), 2023. USGS seismic design parameters determined using "Seismic Hazards by Location," *accessed July 2023*, from the ATC website https://hazards.atcouncil.org/.

the overburden pressure, the shear strength of the soil approaches zero, and the soil can liquefy. The liquefied soils can undergo rapid consolidation or, if unconfined, can flow as a liquid. Structures supported by the liquefied soils can experience rapid, excessive settlement, shearing, or even catastrophic failure.

For fine-grained soils, susceptibility to liquefaction is evaluated based on penetration resistance and plasticity, among other characteristics. Criteria for identifying non-liquefiable, fine-grained soils are constantly evolving. Current practice to identify non-liquefiable, fine-grained soils is based on moisture content and plasticity characteristics of the soils[8,9,10]. The susceptibility of sands, gravels, and sand-gravel mixtures to liquefaction is typically assessed based on penetration resistance, as measured using SPTs, CPTs, or Becker Hammer Penetration tests (BPTs).

Based on the lack of saturated conditions, static groundwater, etc., the soils encountered within our explorations are considered non-liquefiable. Based on review of geologic mapping and our previous experience in the area, we do not anticipate liquefiable conditions are present at depths below those explored as part of this assignment. This judgment is supported by the Oregon Department of Geology and Mineral Industries' Oregon Statewide Geohazards Viewer (HazVu)[11] ,which shows a *low* hazard for liquefaction at the site. In addition, the Oregon Hazard Explorer for Lifelines Program (O-HELP)[12] shows a *very low* hazard for liquefaction for the site or immediate vicinity due to a M9.0 Cascadia Subduction Zone earthquake.

3.2.2 Slope Instability

Due to the relatively level topography at and surrounding the site, the risk of slope instability at the site is considered negligible. The proposed grading includes relatively minimal planned changes in site grades and is not anticipated to significantly increase this risk.

3.2.3 Surface Rupture

3.2.3.1 Faulting

Although the site is situated in a region of the country with known active faults and historic seismic activity, no known faults exist on or immediately adjacent to the site. Therefore, the risk of surface rupture at the site due to faulting is considered low.

3.2.3.2 Lateral Spread

Surface rupture due to lateral spread can occur on sites underlain by liquefiable soils that are located on or immediately adjacent to slopes steeper than about 3 degrees (20H:1V), and/or adjacent to a free face, such as a stream bank or the shore of an open body of water. During lateral spread, the materials overlying the liquefied soils are subject to lateral movement downslope or toward the free face. Based on the relatively

---

8 Seed, R.B. et al., 2003. Recent Advances in Soil Liquefaction Engineering: A Unified and Consistent Framework. Earthquake Engineering Research Center Report No. EERC 2003-06.

9 Bray, Jonathan D., Sancio, Rodolfo B., et al., 2006. Liquefaction Susceptibility of Fine-Grained Soils, Journal of Geotechnical and Geoenvironmental Engineering, Volume 132, Issue 9, September 2006.

10 Idriss, I.M., Boulanger, R.W., 2008. Soil Liquefaction During Earthquakes, Earthquakes Engineering Research Institute Monograph MNO-12.

11 Oregon Department of Geology and Mineral Industries, 2023. Oregon Statewide Geohazards Viewer, *accessed June 2023*, from DOGAMI web site: http://www.oregongeology.org/sub/hazvu/index.htm.

12 Oregon State University College of Engineering, 2023. Oregon Hazard Explorer for Lifelines Program (O-HELP), *accessed June 2023*, from O-HELP web site: http://ohelp.oregonstate.edu/#&ui-state=dialog.

level topography at the site and the non-liquefiable nature of the soils, the risk of damage associated with lateral spread is negligible.

4.0 CONCLUSIONS

Based on the results of our field explorations and analyses, the proposed project may be constructed as described in Section 1.1 of this report, provided the recommendations presented later in this report are incorporated into the design and development. We conclude the primary geotechnical considerations for this site include:

- The presence of relatively deep, undocumented fill materials encountered within borings B-3 and B-5.
- The presence of near-surface, moisture sensitive soils that are susceptible to disturbance during wet weather.

These considerations are described in more detail in the following sections.

4.1 Undocumented Fills

As indicated above and shown on the respective boring logs, we encountered about 11 and 12 feet of undocumented fill materials within borings B-3 and B-5, respectively. The undocumented fill materials encountered within the borings were highly variable in terms of relative consistency/density. To the best of our knowledge, there are no records detailing the original placement and compaction of those fill materials. As part of this assignment, we reviewed a report titled "Phase II Environmental Site Assessment Strong Properties", prepared by Parametrix and dated August 20, 2019. In that report, Parametrix reported encountering construction debris (brick, concrete) during environmental soil sampling during a previous site investigation. In addition, Parametrix reported that the project site was formerly occupied by buildings that contained full basements. We interpret that the relatively deep undocumented fills encountered in borings B-3 and B-5 consist of backfill placed within excavations related to the demolition and backfilling of those former basements, as illustrated on the attached Site Plan, Figure 2. Additional earthwork records could be sought to confirm this assumption is correct, if desired.

Due to the lack of documentation, the variable relative compaction/density of the fill materials, and the potential for excessive, total and differential settlements from proposed loads associated with the planned structures, we do <u>not</u> recommend the existing fill materials be relied upon for subgrade support of shallow foundations, floor slabs, or pavements. Where encountered at design subgrade elevations for those features, we recommend the existing fill materials be over-excavated[13] and replaced with structural fill. Subject to environmental review (by others, where applicable), the existing fill materials may be re-used as structural fill at the site, provided they are moisture-conditioned (as necessary) and compacted in conformance with the recommendations presented later in this report.

Supplemental geotechnical explorations (test pits) are recommended to refine the extent of the inferred basement backfills at this site for use in general earthwork planning and cost estimating purposes. Such

[13] As an alternative to full over-excavation and replacement, the existing fill materials could be improved (densified) in place by pursuing deep ground improvement (e.g. granular piers, deep soil mixing, etc.). Deep ground improvement systems are designed and installed by design-build firms specialized in those techniques. In the event that deep ground improvement is to be considered, the geotechnical engineer should be consulted to provide supplemental recommendations. In addition, the project environmental engineer should be consulted to review the concept of leaving those fill soils in place below buildings and/or pavement areas from the environmental perspective.

supplemental explorations are beyond the scope of this current assignment, but can be performed, upon request, for an additional fee.

4.2 Subgrade Moisture Sensitivity

The near surface silty soils (ML, SM) are susceptible to disturbance during wet weather. Trafficability of these soils may be difficult, and significant damage to the subgrade could occur, if earthwork is undertaken without proper precautions at times when the exposed soils are more than a few percentage points above optimum moisture content. In the event that construction occurs during wet weather, CGT recommends that measures be implemented to protect the fine-grained subgrade in areas of repeated construction traffic and within footing excavations. Geotechnical recommendations for wet weather construction are presented in Section 5.3 of this report.

5.0 RECOMMENDATIONS

The recommendations presented in this report are based on the information provided to us, results of our field investigation and analyses, laboratory data, and professional judgment. CGT has observed only a small portion of the pertinent subsurface conditions. The recommendations are based on the assumptions that the subsurface conditions do not deviate appreciably from those found during the field investigation. CGT should be consulted for further recommendations if the design of the proposed development changes and/or variations or undesirable geotechnical conditions are encountered during site development.

5.1 Site Preparation

5.1.1 Demolition

Demolition of existing buildings and appurtenant structures should include complete removal of all structural elements, including foundations and concrete slabs. Abandoned buried utilities should similarly be removed or grouted full. Concrete or asphalt concrete debris resulting from demolition activities may be re-used as structural fill, provided it is processed in accordance with the recommendations presented in Section 5.4.1 of this report. Alternatively, demolition debris should be hauled off site for disposal.

5.1.2 Stripping

Existing vegetation, topsoil (OL), and rooted fill soils (OL Fill) should be removed from within, and for a minimum 5-foot margin around, proposed building pad, structural fill, and pavement areas. Based on the results of our field explorations, topsoil stripping depths are anticipated to be about ¼ to ½ foot bgs. These materials may be deeper or shallower at locations away from the completed explorations. The geotechnical engineer's representative should provide recommendations for actual stripping depths based on observations during site stripping. Stripped surface vegetation and rooted soils should be transported off-site for disposal, or stockpiled for later use in landscaped areas.

5.1.3 Grubbing

Grubbing of trees should include the removal of the root mass and roots greater than ½ inch in diameter. Grubbed materials should be transported off-site for disposal. Root masses from larger trees may extend greater than 3 feet bgs. Where root masses are removed, the resulting excavation should be properly backfilled with structural fill in conformance with Section 5.4 of this report.

5.1.4 Over Excavation of Existing Deep Fills

Please refer to Figure 2 for an illustration showing the exploration locations and depths of fill encountered. Undocumented fill soils (SP Fill, ML Fill, CL Fill) should be removed from within, and for a minimum 5-foot margin around (where feasible), proposed building pad, structural fill, and pavement areas. Undocumented fills encountered in borings B-3 and B-5 extended to depths of about 11 and 12 feet bgs, respectively. These materials may be deeper or shallower at locations away from the completed explorations. Stripped, inorganic fill materials should be transported off-site for disposal, or may be stockpiled for later use as structural fill as described in Section 5.4.1 of this report.

5.1.5 Existing Utilities & Below-Grade Structures

All existing utilities at the site should be identified prior to excavation. Abandoned utility lines beneath the new building, pavements, and hardscaping features should be completely removed or grouted full. Soft, loose, or otherwise unsuitable soils encountered in utility trench excavations should be removed and replaced with structural fill in conformance with Section 5.4 this report. Buried structures (i.e. footings, foundation walls, retaining walls, slabs-on-grade, tanks, etc.), if encountered during site development, should be completely removed and replaced with structural fill in conformance with Section 5.4 of this report.

5.1.6 Subgrade Preparation – Building Pad & Pavements

After site preparation as recommended above, but prior to placement of structural fill and/or aggregate base, the geotechnical engineer's representative should observe the exposed subgrade soils in order to identify areas of excessive yielding through either proof rolling or probing. Proof rolling of subgrade soils is typically conducted during dry weather using a fully-loaded, 10- to 12-cubic-yard, tandem-axle, tire-mounted, dump truck or equivalent weighted water truck. Areas of limited access or that appear too soft or wet to support proof rolling equipment should be evaluated by probing. During wet weather, subgrade preparation should be performed in general accordance with the recommendations presented in Section 5.3 of this report. If areas of soft soil or excessive yielding are identified, the affected material should be over-excavated to firm, unyielding subgrade, and replaced with imported granular structural fill in conformance with Section 5.4.2 of this report.

5.1.7 Erosion Control

Erosion and sedimentation control measures should be employed in accordance with applicable City, County, and State regulations.

5.2 Temporary Excavations

5.2.1 Overview

Conventional earthmoving equipment in proper working condition should be capable of making necessary excavations for the anticipated site cuts as described earlier in this report. All excavations should be in accordance with applicable OSHA and state regulations. It is the contractor's responsibility to select the excavation methods, to monitor site excavations for safety, and to provide any shoring required to protect personnel and adjacent improvements. A "competent person," as defined by OR-OSHA, should be on-site during construction in accordance with regulations presented by OR-OSHA. CGT's current role on the project does not include review or oversight of excavation safety.

5.2.2 OSHA Soil Type

For use in the planning and construction of temporary excavations up to 15 feet in depth, an OSHA soil type "C" should be used for the existing fill materials and native predominantly sandy soils (ML, SP, SM) encountered in the borings.

5.2.3 Utility Trenches

Temporary trench cuts should stand near vertical to depths of approximately 4 feet in the native, silty and sandy soils (ML, SP, SM) encountered near the surface of the site. If groundwater seepage undermines the stability of the trench, or if sidewall caving is observed during excavation, the sidewalls should be flattened or shored. Depending on the time of year trench excavations occur, trench dewatering may be required in order to maintain dry working conditions. If groundwater is encountered, we recommend placing trench stabilization material at the base of the excavations. Trench stabilization material should be in conformance with Section 5.4.3.

5.2.4 Excavations Near Foundations

Excavations near footings should not extend within a 1 horizontal to 1 vertical (1H:1V) plane projected out and down from the outside, bottom edge of the footings. In the event excavation needs to extend below the referenced plane, temporary shoring of the excavation and/or underpinning of the subject footing may be required. The geotechnical engineer should be consulted to review proposed excavation plans for this design case to provide specific recommendations.

5.3 Wet Weather Considerations

For planning purposes, the wet season should be considered to extend from late September to late June. It is our experience that dry weather working conditions should prevail between early July and mid-September. Notwithstanding the above, soil conditions should be evaluated in the field by the geotechnical engineer's representative at the initial stage of site preparation to determine whether the recommendations within this section should be incorporated into construction.

5.3.1 Overview

Due to their fines content, the on-site silty soils (ML, SM) are susceptible to disturbance during wet weather. Trafficability of these soils may be difficult, and significant damage to subgrade soils could occur, if earthwork is undertaken without proper precautions at times when the exposed soils are more than a few percentage points above optimum moisture content. For wet weather construction, site preparation activities may need to be accomplished using track-mounted equipment, loading removed material onto trucks supported on granular haul roads, or other methods to limit soil disturbance. The geotechnical engineer's representative should evaluate the subgrade during excavation by probing rather than proof rolling. Soils that have been disturbed during site preparation activities, or soft or loose areas identified during probing, should be over-excavated to firm, unyielding subgrade, and replaced with imported granular structural fill in conformance with Section 5.4.2.

5.3.2 Geotextile Separation Fabric

We recommend a geotextile separation fabric be placed to serve as a barrier between the prepared subgrade and granular fill/base rock in areas of repeated or heavy construction traffic. The geotextile fabric

should meet the requirements presented in the current Oregon Department of Transportation (ODOT) Standard Specification for Construction (ODOT SSC), Section 02320.

5.3.3 Granular Working Surfaces (Haul Roads & Staging Areas)

Haul roads subjected to repeated heavy, tire-mounted, construction traffic (e.g. dump trucks, concrete trucks, etc.) will require a minimum of 18 inches of imported granular material. For light staging areas, 12 inches of imported granular material is typically sufficient. Additional granular material or geo-grid reinforcement may be recommended based on site conditions and/or loading at the time of construction. The imported granular material should be in conformance with Section 5.4.2 and have less than 5 percent material passing the U.S. Standard No. 200 Sieve. The prepared subgrade should be covered with geotextile fabric (Section 5.3.2) prior to placement of the imported granular material. The imported granular material should be placed in a single lift (up to 24 inches deep) and compacted using a smooth-drum, non-vibratory roller until well-keyed.

5.3.4 Footing Subgrade Protection

A minimum of 3 inches of imported granular material is recommended to protect fine-grained (silty), footing subgrades from foot traffic during inclement weather. The imported granular material should be in conformance with Section 5.4.2. The maximum particle size should be limited to 1 inch. The imported granular material should be placed in one lift over the prepared, undisturbed subgrade, and compacted using non-vibratory equipment until well keyed.

Surface water should not be allowed to collect in footing excavations. The excavations should be draped and/or provided with sumps to preclude water accumulation during inclement weather.

5.4 Structural Fill

The geotechnical engineer should be provided the opportunity to review all materials considered for use as structural fill (prior to placement). Samples of the proposed fill materials should be submitted to the geotechnical engineer a minimum of 5 business days prior their use on site[14]. The geotechnical engineer's representative should be contacted to evaluate compaction of structural fill as the material is being placed. Evaluation of compaction may take the form of in-place density tests and/or proof roll tests with suitable equipment. Structural fill should be evaluated at intervals not exceeding every 2 vertical feet as the fill is being placed.

5.4.1 On-Site Soils – General Use

In addition to the project geotechnical engineer, re-use of on-site soils to serve as structural fill should be reviewed by the project environmental consultant. The recommendations that follow assume the soils are suitable for re-use from the environmental perspective.

5.4.1.1 Fine-Grained (Silty, Clayey) Soils (ML Fill, CL Fill, ML, SM)

Re-use of these soils as structural fill may be difficult because these soils are sensitive to small changes in moisture content and are difficult, if not impossible, to adequately compact during wet weather. We anticipate the moisture content of these soils will be higher than the optimum moisture content for satisfactory compaction. Therefore, moisture conditioning (drying) should be expected in order to achieve adequate compaction. If used as structural fill, these soils should be free of organic matter, debris, and particles larger

[14] Laboratory testing for moisture density relationship (Proctor) is required. Tests for gradation may be required.

than 4 inches. When used as structural fill, these soils should be placed in lifts with a maximum pre-compaction thickness of about 8 inches at moisture contents within –1 and +3 percent of optimum, and compacted to not less than 92 percent of the material's maximum dry density, as determined in general accordance with ASTM D1557 (Modified Proctor).

5.4.1.2 Poorly Graded Sandy Soils (SP, SP Fill)

Re-use of the on-site, relatively clean, sandy soils as structural fill is feasible, provided the materials are kept clean of organics, debris, and particles larger than 4 inches in diameter. If reused as structural fill, these materials should be prepared in general accordance with Section 5.4.2.

If the on-site materials cannot be properly moisture-conditioned and/or processed, we recommend using imported granular material for structural fill.

5.4.2 Imported Granular Structural Fill – General Use

Imported granular structural fill should consist of angular pit or quarry run rock, crushed rock, or crushed gravel that is fairly well graded between coarse and fine particle sizes. The granular fill should contain no organic matter, debris, or particles larger than 4 inches, and have less than 5 percent material passing the U.S. Standard No. 200 Sieve. For fine-grading purposes, the maximum particle size should be limited to 1½ inches. The percentage of fines can be increased to 12 percent of the material passing the U.S. Standard No. 200 Sieve if placed during dry weather, and provided the fill material is moisture-conditioned, as necessary, for proper compaction. Imported granular fill material should be placed in lifts with a maximum thickness of about 12 inches, and compacted to not less than 95 percent of the material's maximum dry density, as determined in general accordance with ASTM D1557 (Modified Proctor). Proper moisture conditioning and the use of vibratory equipment will facilitate compaction of these materials.

Granular fill materials with high percentages of particle sizes in excess of 1½ inches are considered non-moisture-density testable materials. As an alternative to conventional density testing, compaction of these materials should be evaluated by proof roll test observation (deflection tests), where accepted by the geotechnical engineer.

5.4.3 Trench Base Stabilization Material

If groundwater is present at the base of utility excavations, trench base stabilization material should be placed. Trench base stabilization material should consist of a minimum of 1 foot of well-graded granular material with a maximum particle size of 4 inches and less than 5 percent material passing the U.S. Standard No. 4 Sieve. The material should be free of organic matter and other deleterious material, placed in one lift, and compacted until well-keyed.

5.4.4 Trench Backfill Material

Trench backfill for the utility pipe base and pipe zone should consist of granular material as recommended by the utility pipe manufacturer. Trench backfill above the pipe zone should consist of well-graded granular material containing no organic matter or debris, have a maximum particle size of ¾ inch, and have less than 8 percent material passing the U.S. Standard No. 200 Sieve. As a guideline, trench backfill should be placed in maximum 12-inch-thick lifts. The earthwork contractor may elect to use alternative lift thicknesses based on their experience with specific equipment and fill material conditions during construction in order to achieve

the required compaction. The following table presents recommended relative compaction percentages for utility trench backfill.

Table 2 Utility Trench Backfill Compaction Recommendations

Backfill Zone	Recommended Minimum Relative Compaction	
	Structural Areas[1,2]	Landscaping Areas
Pipe Base and Within Pipe Zone	90% ASTM D1557 or pipe manufacturer's recommendation	85% ASTM D1557 or pipe manufacturer's recommendation
Above Pipe Zone	92% ASTM D1557	88% ASTM D1557
Within 3 Feet of Design Subgrade	95% ASTM D1557	90% ASTM D1557

1 Includes proposed building, pavement areas, structural fill areas, exterior hardscaping, etc.
2 Or as specified by the local jurisdiction where located in the public right of way.

5.4.5 Controlled Low-Strength Material (CLSM)

CLSM is a self-compacting, cementitious material that is typically considered when backfilling localized areas. CLSM is sometimes referred to as "controlled density fill" or CDF. Due to its flowable characteristics, CLSM typically can be placed in restricted-access excavations where placing and compacting fill is difficult. If chosen for use at this site, we recommend the CLSM be in conformance with Section 00442 of the most recent, ODOT SSC. The geotechnical engineer's representative should observe placement of the CLSM and obtain samples for compression testing in accordance with ASTM D4832. As a guideline, for each day's placement, two compressive strength specimens from the same CLSM sample should be tested. The results of the two individual compressive strength tests should be averaged to obtain the reported 28-day compressive strength. If CLSM is considered for use on this site, please contact the geotechnical engineer for site-specific and application-specific recommendations.

5.5 Shallow Foundations

The recommendations that follow assume that the existing relatively deep undocumented fill soils, as described earlier in this report, will be over-excavated and replaced with structural fill in conformance with Section 4.0 of this report. In the event that deep ground improvement (e.g. granular piers, deep soil mixing, etc.) will be used to remedy those fill materials and shallow foundations will derive subgrade support from improved ground, the geotechnical engineer should be consulted to provide supplemental recommendations.

5.5.1 Subgrade Preparation

Satisfactory subgrade support for shallow foundations can be obtained from the native, medium stiff to better silty soils (ML), the native, medium dense to better poorly graded sandy soils (SM, SP), or new structural fill that is properly placed and compacted on these materials during construction. The geotechnical engineer's representative should be contacted to observe subgrade conditions prior to placement of forms, reinforcement steel, or granular backfill (if required). If soft, loose, or otherwise unsuitable soils are encountered, they should be over-excavated as recommended by the geotechnical representative at the time of construction. The resulting over-excavation should be brought back to grade with imported granular structural fill in conformance with Section 5.4.2. The maximum particle size of over-excavation backfill should be limited to 1½ inches. All granular pads for footings should be constructed a minimum of 6 inches wider on each side of the footing for every vertical foot of over-excavation.

5.5.2 Minimum Footing Width & Embedment

Minimum footing widths should be in conformance with the current OSSC. As a guideline, CGT recommends individual spread footings have a minimum width of 24 inches. For three plus story structures, we recommend continuous wall footings have a minimum width of 18 inches. All footings should be founded at least 18 inches below the lowest, permanent adjacent grade to develop lateral capacity and for frost protection.

5.5.3 Bearing Pressure & Settlement

Footings founded as recommended above should be proportioned for a maximum allowable soil bearing pressure of 2,500 pounds per square foot (psf). This bearing pressure is a net bearing pressure, applies to the total of dead and long-term live loads, and may be increased by one-third when considering seismic or wind loads. For foundations founded as recommended above, total settlement of foundations is anticipated to be less than 1 inch. Differential settlements between adjacent columns and/or bearing walls should not exceed ½ inch. If an increased allowable soil bearing pressure is desired, the geotechnical engineer should be consulted.

5.5.4 Lateral Capacity

A maximum passive (equivalent fluid) earth pressure of 150 pounds per cubic foot (pcf) is recommended for design of footings cast neat into excavations in suitable native soil or confined by granular structural fill that is properly placed and compacted during construction. The recommended earth pressure was computed using a factor of safety of 1½, which is appropriate due to the amount of movement required to develop full passive resistance. In order to develop the above capacity, the following should be understood:

1. Concrete must be poured neat in excavations or the foundations must be backfilled with imported granular structural fill,
2. The adjacent grade must be level,
3. The static ground water level must remain below the base of the footings throughout the year.
4. Adjacent floor slabs, pavements, or the upper 12-inch-depth of adjacent, unpaved areas should not be considered when calculating passive resistance.

An ultimate coefficient of friction equal to 0.35 may be used when calculating resistance to sliding for footings founded on the native soils described above. An ultimate coefficient of friction equal to 0.45 may be used when calculating resistance to sliding for footings founded on a minimum of 6 inches of imported granular structural fill (crushed rock) that is properly placed and compacted during construction.

5.5.5 Subsurface Drainage

Recognizing the presence of near-surface fine-grained (silty) soils encountered at this site, we recommend placing foundation drains at the exterior, base elevations of perimeter continuous wall footings. Foundation drains should consist of a minimum 4-inch diameter, perforated, PVC drainpipe wrapped with a non-woven geotextile filter fabric. The drains should be backfilled with a minimum of 2 cubic feet of open graded drain rock per lineal foot of pipe. The drain rock should also be encased in a geotextile fabric in order to provide separation from the surrounding fine-grained soils. Foundation drains should be positively sloped and should outlet to a suitable discharge point. The geotechnical engineer's representative should observe the drains prior to backfilling. Roof drains should not be tied into foundation drains.

5.6 Rigid Retaining Walls

5.6.1 Footings

Retaining wall footings should be designed and constructed in conformance with the recommendations presented in Section 5.5, as applicable.

5.6.2 Wall Drains

We recommend placing retaining wall drains at the base elevation of the heel of retaining wall footings. Retaining wall drains should consist of a minimum 4-inch-diameter, perforated, HDPE (High Density Polyethylene) drainpipe wrapped with a non-woven geotextile filter fabric. The drains should be backfilled with a minimum of 2 cubic feet of open graded drain rock per lineal foot of pipe. The drain rock should be encased in a geotextile fabric in order to provide separation from the surrounding soils. Retaining wall drains should be positively sloped and should outlet to a suitable discharge point. The geotechnical engineer's representative should be contacted to observe the drains prior to backfilling. Roof or area drains should not be tied into retaining wall drains.

5.6.3 Wall Backfill

Retaining walls should be backfilled with imported granular structural fill in conformance with Section 5.4.2 and contain less than 5 percent passing the U.S. Standard No. 200 Sieve. The backfill should be compacted to a minimum of 90 percent of the material's maximum dry density as determined in general accordance with ASTM D1557 (Modified Proctor). When placing fill behind walls, care must be taken to minimize undue lateral loads on the walls. Heavy compaction equipment should be kept at least "H" feet from the back of the walls, where "H" is the height of the wall. Light mechanical or hand tamping equipment should be used for compaction of backfill materials within "H" feet of the back of the walls.

5.6.4 Design Parameters & Limitations

For rigid retaining walls founded, backfilled, and drained as recommended above, the following table presents parameters recommended for design.

Table 3 Design Parameters for Rigid Retaining Walls

Retaining Wall Condition	Modeled Backfill Condition	Static Equivalent Fluid Pressure (S_A)[1]	Seismic Equivalent Fluid Pressure (S_{AE})[1,2]	Surcharge from Uniform Load, q, Acting on Backfill Behind Retaining Wall
Not Restrained from Rotation	Level (i=0)	28 pcf	39 pcf	0.22*q
Restrained from Rotation	Level (i=0)	50 pcf	53 pcf	0.38*q

[1] Refer to the attached Figure 4 for a graphical representation of static and seismic loading conditions. Seismic resultant force acts at 0.6H above the base of the wall.

[2] Seismic (dynamic) lateral loads were computed using the Mononobe-Okabe Equation as presented in the 1997 Federal Highway Administration (FHWA) design manual. Static and seismic equivalent fluid pressures are not additive.

The above design recommendations are based on the assumptions that:

- The walls consist of concrete cantilevered retaining walls (β = 0 and δ = 24 degrees, see Figure 4).
- The walls are 10 feet or less in height.
- The backfill is drained and consists of imported granular structural fill (ϕ = 38 degrees).
- No point, line, or strip load surcharges are imposed behind the walls.
- The grade behind the wall is level, or sloping down and away from the wall, for a distance of 10 feet or more from the wall.
- The grade in front of the walls is level or ascending for a distance of at least 5 feet from the wall.

Re-evaluation of our recommendations will be required if the retaining wall design criteria for the project vary from these assumptions.

5.6.5 Surcharge Loads

Where present, surcharges from adjacent site features (i.e. buildings, slabs, pavements, etc.) should be evaluated in design of retaining walls at the site. Methods for calculating lateral pressures on rigid retaining walls from strip, line, and vertical point loads are presented on the attached Figure 5.

5.7 Floor Slabs

5.7.1 Subgrade Preparation

Satisfactory subgrade support for slabs constructed on grade, supporting up to 200 psf area loading, can be obtained from the native, medium stiff to better silty soils (ML), the native, medium dense to better sandy soils (SP, SM), or new structural fill that is properly placed and compacted on these materials during construction. The geotechnical engineer's representative should observe floor slab subgrade soils to evaluate surface consistencies. If soft, loose, or otherwise unsuitable soils are encountered, they should be over-excavated as recommended by the CGT geotechnical representative at the time of construction. The resulting over-excavation should be brought back to grade with imported granular structural fill as described in Section 5.4.2.

5.7.1 Crushed Rock Base

Concrete floor slabs should be supported on a minimum 6-inch-thick layer of crushed rock (base rock).

5.7.1.1 Conventional Base Rock

Floor slab base rock should consist of well-graded granular material (crushed rock) containing no organic matter or debris, have a maximum particle size of ¾ inch, and have less than 5 percent material passing the U.S. Standard No. 200 Sieve. Floor slab base rock should be placed in one lift and compacted to not less than 95 percent of the material's maximum dry density as determined in general accordance with ASTM D1557 (Modified Proctor). We recommend "choking" the surface of the base rock with sand just prior to concrete placement. Choking means the voids between the largest aggregate particles are filled with sand, but does not provide a layer of sand above the base rock. Choking the base rock surface reduces the lateral restraint on the bottom of the concrete during curing. Choking the base rock also reduces punctures in vapor retarding membranes due to foot traffic where such membranes are used.

5.7.1.2 Gas Permeable Base Rock

Floor slab base rock in areas where radon gas mitigation is desired should consist of open-graded crushed rock containing no organic matter or debris, with all material passing through a 2-inch sieve and retained on the ¼-inch sieve, in accordance with Section 1812.2.1, Bullet 1, of the 2022 OSSC.

CGT recommends that a minimum 10-mil polyethylene sheeting or equivalent material with equal or greater tensile strength, resistance to puncture, resistance to deterioration, and resistance to water-vapor transmission be placed on top of the gas-permeable base rock to act as a soil-gas-retarder. Placement and installation of this sheeting should be in conformance with that indicated in Section 1812.2.2 of the 2022 OSSC.

The geotechnical engineer or their representative should be contacted to observe gas-permeable base rock conditions prior to placement of the soil-gas-retarder.

5.7.2 Design Considerations

For floor slabs constructed with a 6-inch thick base rock layer as recommended, an effective modulus of subgrade reaction of 150 pounds per cubic inch (pci) is recommended for the design of the floor slab. A higher effective modulus of subgrade reaction can be obtained by increasing the base rock thickness. Please contact the geotechnical engineer for additional recommendations if a higher modulus is desired. Floor slabs constructed as recommended will likely settle less than ½ inch. For general floor slab construction, slabs should be jointed around columns and walls to permit slabs and foundations to settle differentially.

5.7.3 Subgrade Moisture Considerations

Liquid moisture and moisture vapor should be expected at the subgrade surface. The recommended crushed rock base is anticipated to provide protection against liquid moisture. Where moisture vapor emission through the slab must be minimized, e.g. impervious floor coverings, storage of moisture sensitive materials directly on the slab surface, etc., a vapor retarding membrane or vapor barrier below the slab should be considered. Factors such as cost, special considerations for construction, floor coverings, and end use suggest that the decision regarding a vapor retarding membrane or vapor barrier be made by the architect and owner.

If a vapor retarder or vapor barrier is placed below the slab, its location should be based on current American Concrete Institute (ACI) guidelines, ACI 302 Guide for Concrete Floor and Slab Construction. In some cases, this indicates placement of concrete directly on the vapor retarder or barrier. Please note that the placement of concrete directly on impervious membranes increases the risk of plastic shrinkage cracking and slab curling in the concrete. Construction practices to reduce or eliminate such risk, as described in ACI 302, should be employed during concrete placement.

5.8 Pavements

5.8.1 Subgrade Preparation

Pavement subgrade preparation should be performed in general accordance with the recommendations presented in Section 5.1.6 above. Subgrade surfaces should be crowned (or sloped) for proper drainage in accordance with specifications provided by the project civil engineer.

5.8.2 Design Pavement Sections

Recommendations for design pavement sections were not included as part of this assignment, but can be provided, upon request, for an additional fee.

5.9 Additional Considerations

5.9.1 Drainage

Subsurface drains should be connected to the nearest storm drain, on-site infiltration system (to be designed by others) or other suitable discharge point. Paved surfaces and grading near or adjacent to the building should be sloped to drain away from the building. Surface water from paved surfaces and open spaces should be collected and routed to a suitable discharge point. Surface water should not be directed into foundation or retaining wall drains.

5.9.2 Expansive Potential

The near surface native soils consist of low to moderate plasticity silt and non-plastic sandy soils. Based on our experience with similar soils in the vicinity of the site, these soils are not considered to be susceptible to appreciable movements from changes in moisture content. Accordingly, no special considerations are required to mitigate expansive potential of the near surface soils at the site.

6.0 RECOMMENDED ADDITIONAL SERVICES

6.1 Design Review

Geotechnical design review is of paramount importance. We recommend the geotechnical design review take place prior to releasing bid packets to contractors.

6.2 Observation of Construction

Satisfactory earthwork, foundation, floor slab, and pavement performance depends to a large degree on the quality of construction. Sufficient observation of the contractor's activities is a key part of determining that the work is completed in accordance with the construction drawings and specifications. Subsurface conditions observed during construction should be compared with those encountered during subsurface explorations, and recognition of changed conditions often requires experience. We recommend that qualified personnel visit the site with sufficient frequency to detect whether subsurface conditions change significantly from those observed to date and anticipated in this report. We recommend geotechnical engineer's representative attend a pre-construction meeting coordinated by the contractor and/or developer. The project geotechnical engineer's representative should provide observations and/or testing of at least the following earthwork elements during construction:

- Site Stripping and Demolition
- Subgrade Preparation for Shallow Foundations, Retaining Walls, Structural Fills, Floor Slabs, and Pavements
- Compaction of Structural Fill, Retaining Wall Backfill, and Utility Trench Backfill
- Compaction of Base Rock for Floor Slabs and Pavements
- Compaction of Asphalt Concrete for Pavements

It is imperative that the owner and/or contractor request earthwork observations and testing at a frequency sufficient to allow the geotechnical engineer to provide a final letter of compliance for the earthwork activities.

7.0 LIMITATIONS

We have prepared this report for use by the owner/developer and other members of the design and construction team for the proposed development. The opinions and recommendations contained within this report are forwarded to assist in the planning and design process and are not intended to be, nor should they be construed as, a warranty of subsurface conditions.

We have made observations based on our explorations that indicate the soil conditions at only those specific locations and only to the depths penetrated. These observations do not necessarily reflect soil types, strata thickness, or water level variations that may exist between or away from our explorations. If subsurface conditions vary from those encountered in our site explorations, CGT should be alerted to the change in conditions so that we may provide additional geotechnical recommendations, if necessary. Observation by experienced geotechnical personnel should be considered an integral part of the construction process.

The owner/developer is responsible for ensuring that the project designers and contractors implement our recommendations. When the design has been finalized, prior to releasing bid packets to contractors, we recommend that the design drawings and specifications be reviewed by our firm to see that our recommendations have been interpreted and implemented as intended. If design changes are made, we request that we be retained to review our conclusions and recommendations and to provide a written modification or verification. Design review and construction phase testing and observation services are beyond the scope of our current assignment, but will be provided for an additional fee.

The scope of our services does not include services related to construction safety precautions, and our recommendations are not intended to direct the contractor's methods, techniques, sequences, or procedures, except as specifically described in our report for consideration in design.

Geotechnical engineering and the geologic sciences are characterized by a degree of uncertainty. Professional judgments presented in this report are based on our understanding of the proposed construction, familiarity with similar projects in the area, and on general experience. Within the limitations of scope, schedule, and budget, our services have been executed in accordance with the generally accepted practices in this area at the time this report was prepared; no warranty, expressed or implied, is made. This report is subject to review and should not be relied upon after a period of three years.

STRONG PROPERTY - PORTLAND, OREGON
Project Number G2305938

FIGURE 1
Site Location

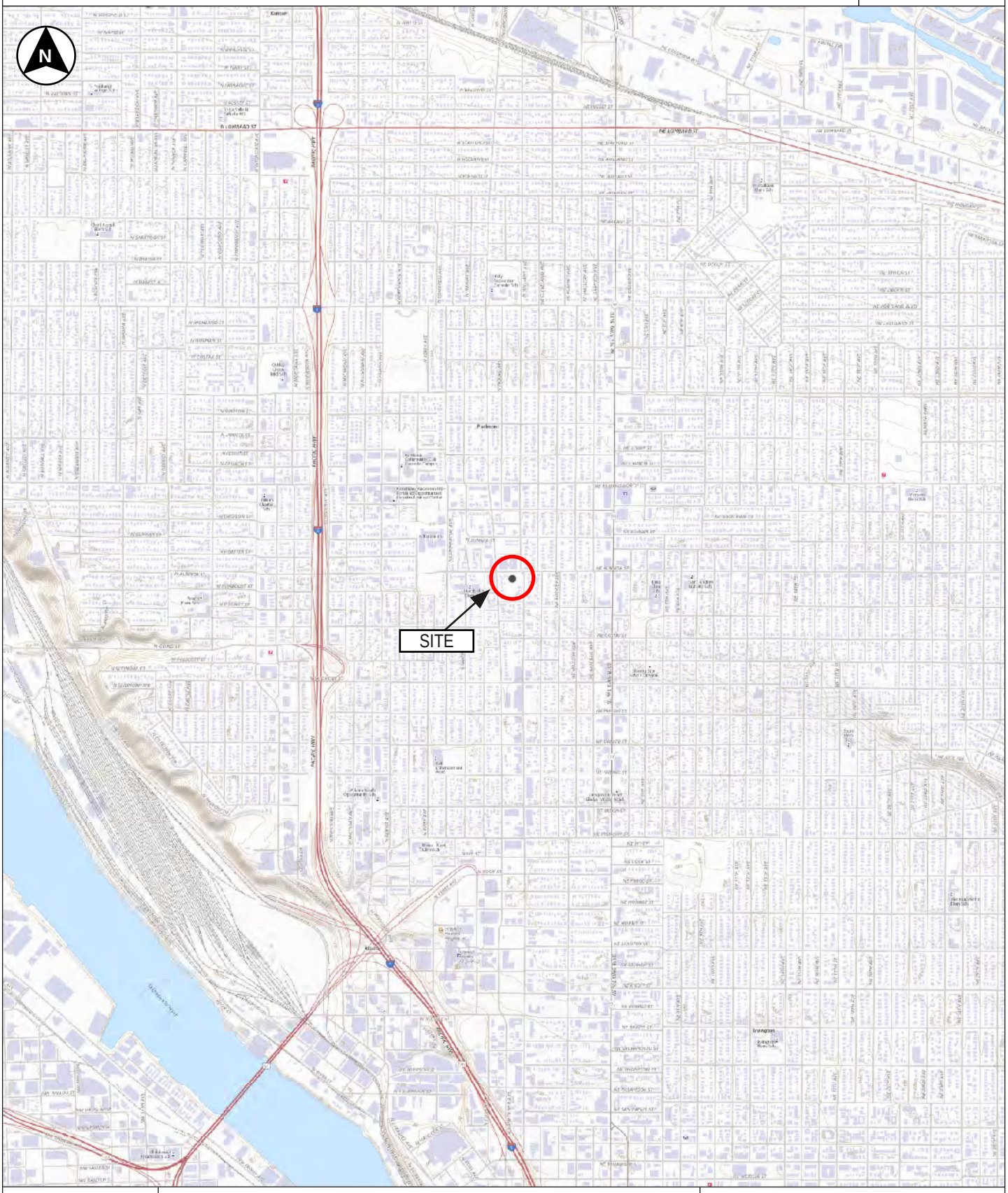

CARLSON CGT GEOTECHNICAL
503-601-8250
Drafted by: AET

USGS Topographic base map created with The National Map, 2023, at https://apps.nationalmap.gov/viewer/

Township 1 North, Range 1 East, Section 22, Willamette Meridian

Latitude: 45.558812° North
Longitude: 122.667371° West

1 Inch = 2,000 feet
0 2000 4000

LU 23-103655 DZ
Exhibit A7

STRONG PROPERTY - PORTLAND, OREGON
Project Number G2305938

Figure 2
Site Plan

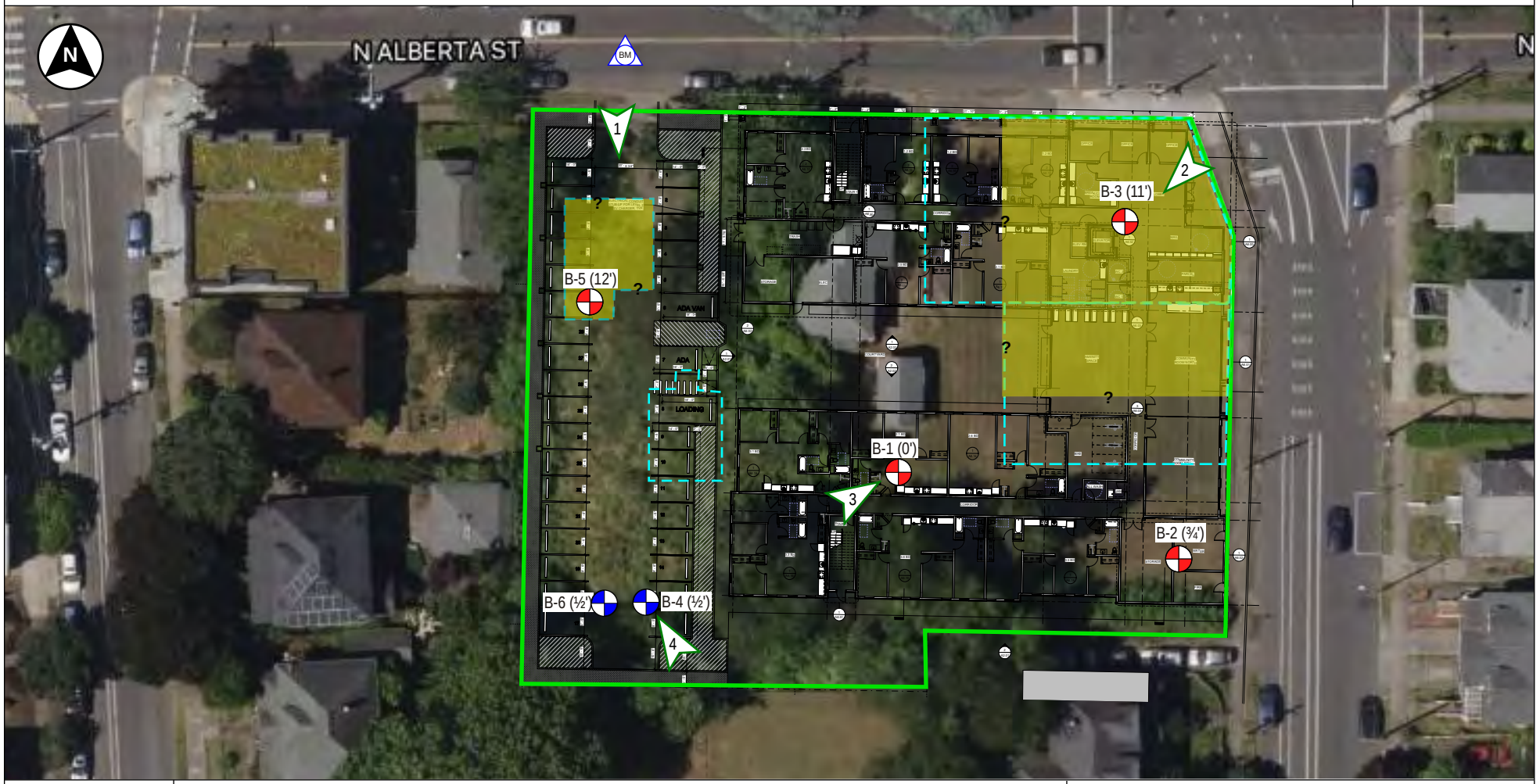

LEGEND

B-1 (') Hollow-stem auger boring. Depth of fill indicated in ().

B-6 (') Infiltration test boring. Depth of fill indicated in ().

BM Elevation benchmark - Assumed 100-foot elevation at the surface of N Alberta Street.

Property boundary

Approximate location of previous buildings with basements (see text for additional discussion)

Area of site inferred to be underlain by 10+ feet of undocumented fill (see text for additional discussion.)

1 Inch = 50 Feet

0 50 100

NOTES: 2022 aerial photograph from Satellites.Pro, https://satellites.pro/Portland_map.Oregon_region.USA. Building footprint from site plan produced by Parametrix, provided by client. Locations noted are approximate.

CARLSON CGT GEOTECHNICAL
503-601-8250
Drafted by: AET

LU 23-103655 DZ
Exhibit A7

Photograph 1

Photograph 2

Photograph 3

Photograph 4

ACTIVE LATERAL PRESSURE DISTRIBUTION

STATIC LOADING CONDITIONS

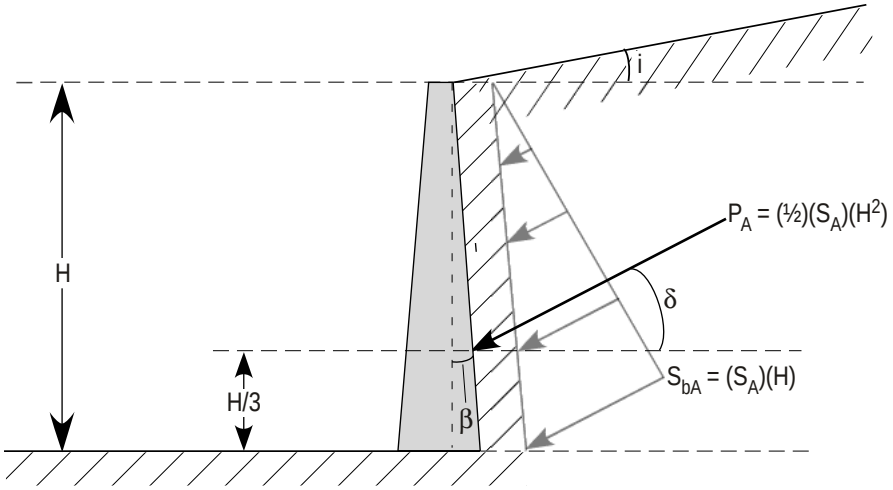

SEISMIC LOADING CONDITIONS

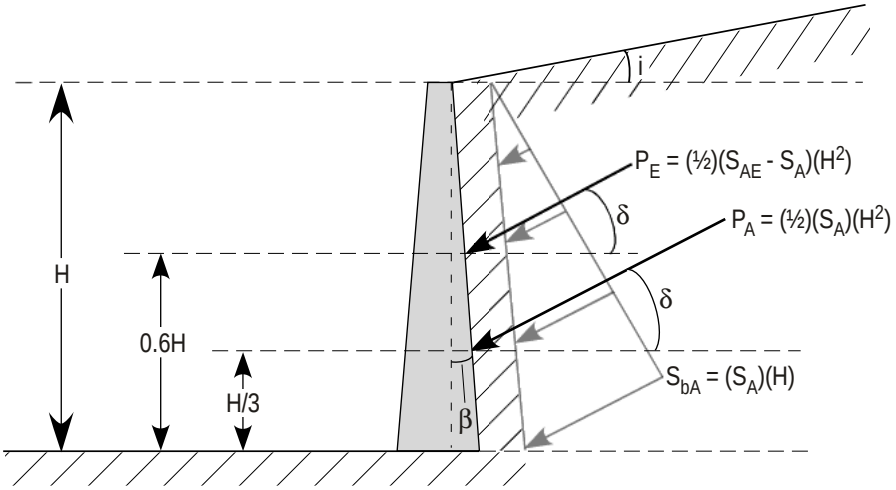

LEGEND

S_A = Active lateral equivalent fluid pressure (lb/ft^3)*

S_{bA} = Active lateral earth pressure (static) at the bottom of wall (lb/ft^3)

S_{AE} = Active total (static + seismic) equivalent fluid pressure (lb/ft^3)*

i = Slope of backfill, relative to horizontal (degrees)**

β = Slope of back of wall, relative to vertical (degrees)**

P_A = Static active thrust force acting at H/3 from bottom of retaining wall (lb/ft)

P_E = Dynamic active thrust force acting at 0.6H from bottom of retaining wall (lb/ft)

δ = Angle from normal of back of wall (degrees). Based on friction developing between wall and backfill**

*Refer to report text for calculated values **Refer to report text for modeled/assumed values

CARLSON CGT GEOTECHNICAL 503-601-8250

Notes

1. Uniform pressure distribution of seismic loading is based on empirical evaluations [Sherif et al, 1982 and Whitman, 1990].
2. Placement of seismic resultant force at 0.6H is based on wall behavior and model test results [Whitman, 1990].

STRIP LOAD PARALLEL TO WALL[1]

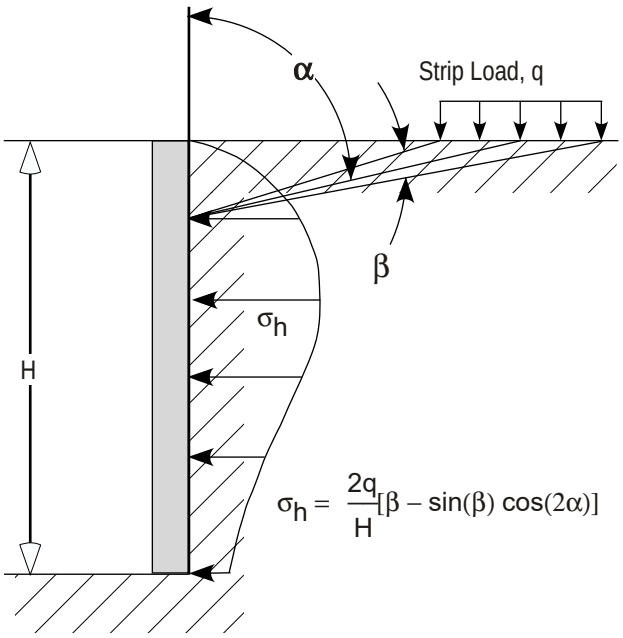

$$\sigma_h = \frac{2q}{H}[\beta - \sin(\beta)\cos(2\alpha)]$$

LINE LOAD PARALLEL TO WALL[2]

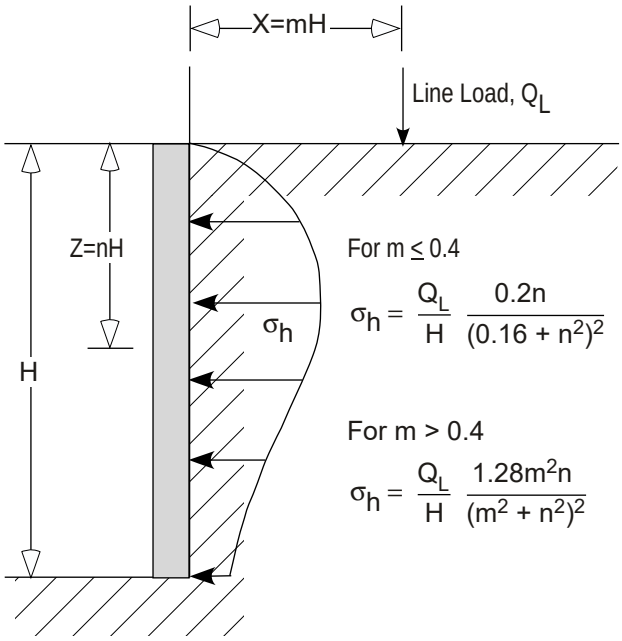

For $m \leq 0.4$

$$\sigma_h = \frac{Q_L}{H}\frac{0.2n}{(0.16 + n^2)^2}$$

For $m > 0.4$

$$\sigma_h = \frac{Q_L}{H}\frac{1.28m^2n}{(m^2 + n^2)^2}$$

VERTICAL POINT LOAD[2]

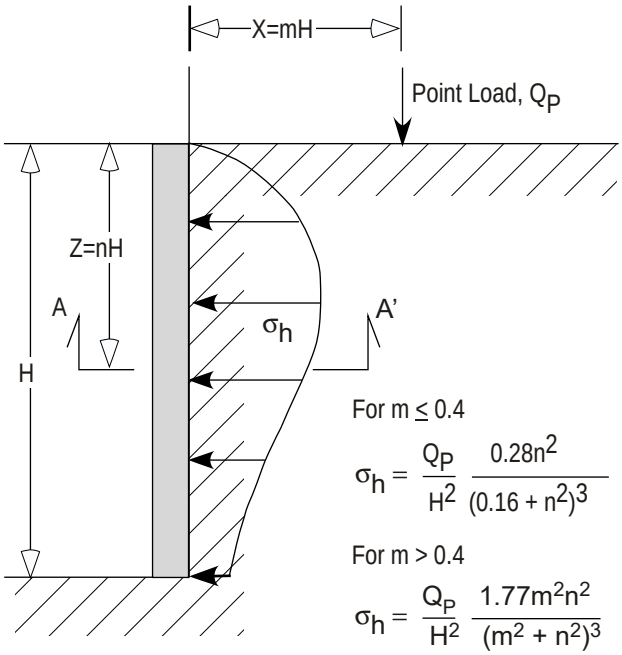

For $m \leq 0.4$

$$\sigma_h = \frac{Q_P}{H^2}\frac{0.28n^2}{(0.16 + n^2)^3}$$

For $m > 0.4$

$$\sigma_h = \frac{Q_P}{H^2}\frac{1.77m^2n^2}{(m^2 + n^2)^3}$$

Section A - A'

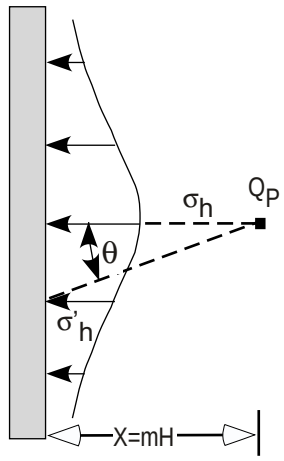

$$\sigma'_h = \sigma_h \cos^2(1.1\,\theta)$$

CARLSON CGT GEOTECHNICAL 503-601-8250

Notes: 1. Das, Principles of Geotechnical Engineering, 1990 Edition.
2. NAVFAC Design Manual 7.06.

Refer to the referenced design manuals for additional guidance. Contact CGT if there are any questions with modeling surcharge loads.

Carlson Geotechnical

A Division of Carlson Testing, Inc.
Phone: (503) 601-8250
www.carlsontesting.com

Bend Office	**(541) 330-9155**
Eugene Office	**(541) 345-0289**
Salem Office	**(503) 589-1252**
Tigard Office	**(503) 684-3460**

Appendix A: Subsurface Investigation and Laboratory Testing

Strong Property - North Portland
4931 North Williams Avenue
Portland, Oregon

CGT Project Number G2305938

August 7, 2023

Prepared For:

James Lee
Community Development Partners
126 NE Alberta Street, Suite 202
Portland, Oregon, 97211

Prepared by
Carlson Geotechnical

Exploration Key ..... Figure A1
Soil Classification ..... Figure A2
Exploration Logs ..... Figures A3 – A8

A.1.0 SUBSURFACE INVESTIGATION

Our field investigation consisted of six drilled borings completed on July 28, 2023. The exploration locations are shown on the Site Plan, attached to the geotechnical report as Figure 2. The exploration locations shown therein were determined based on measurements from existing site features (buildings, etc.) and are approximate. Surface elevations indicated on the logs were estimated based on a temporary benchmark (assumed 100-foot elevation at the surface of North Alberta Avenue) shown on the referenced Site Plan and are approximate. The attached figures detail the exploration methods (Figure A1), soil classification criteria (Figure A2), and present detailed logs of the explorations (Figures A3 through A8), as discussed below.

A.1.1 Drilled Borings

CGT observed the advancement of six drilled borings (B-1 through B-6) at the site using a 7822DT GeoProbe drill rig provided and operated by our subcontractor, Western States Soil Conservation of Hubbard, Oregon. The borings were advanced using the hollow-stem auger and mud rotary drilling techniques to depths ranging from approximately 6½ to 51½ feet bgs. Upon completion, the borings were backfilled with granular bentonite. Drilling wastes (cuttings and drilling fluids) were left onsite

A.1.2 In-Situ Testing

A.1.2.1 Standard Penetration Tests (SPTs)

SPTs were conducted within the borings using a split-spoon sampler in general accordance with ASTM D1586. The SPTs were conducted at 2½- to 10-foot intervals to the termination depths of the borings. The SPT is described on the attached Exploration Key, Figure A1.

A.1.2.2 Infiltration Tests

CGT performed two infiltration tests at the site, within the hollow-stem auger borings B-4 and B-6. Details regarding the test procedure and results of the tests are presented in Appendix B.

A.1.3 Material Classification & Sampling

Soil samples were obtained at selected intervals in the borings using the referenced split-spoon (SPT) sampler detailed on Figure A1. A qualified member of CGT's geological staff collected the samples and logged the soils in general accordance with the Visual-Manual Procedure (ASTM D2488). An explanation of this classification system is attached as Figure A2. The SPT samples were stored in sealable plastic bags and transported to our soils laboratory for further examination and testing. Our geological staff visually examined all samples in order to refine the initial field classifications.

A.1.4 Subsurface Conditions

Subsurface conditions are summarized in Section 2.3 of the geotechnical report. Detailed logs of the explorations are presented on the attached exploration logs, Figures A3 through A8.

A.2.0 LABORATORY TESTING

Laboratory testing was performed on samples collected in the field to refine our initial field classifications and determine in-situ parameters. Laboratory testing included the following:

- Thirteen moisture content determinations (ASTM D2216).
- Three percentage passing the U.S. Standard No. 200 Sieve tests (ASTM D1140).

Results of the laboratory tests are shown on the exploration logs.

STRONG PROPERTY - PORTLAND, OREGON *Project Number G2305938*	**FIGURE A1** **Exploration Key**

PL — LL MC	Atterberg limits (plasticity) test results (ASTM D4318): PL = Plastic Limit, LL = Liquid Limit, and MC= Moisture Content (ASTM D2216)
☐ FINES CONTENT (%)	Percentage passing the U.S. Standard No. 200 Sieve (ASTM D1140)

SAMPLING

GRAB	Grab sample
BULK	Bulk sample
SPT	**Standard Penetration Test** (SPT) consists of driving a 2-inch, outside-diameter, split-spoon sampler into the undisturbed formation with repeated blows of a 140-pound, hammer falling a vertical distance of 30 inches (ASTM D1586). The number of blows (N-value) required to drive the sampler the last 12 inches of an 18-inch sample interval is used to characterize the soil consistency or relative density. The drill rig was equipped with an cat-head or automatic hammer to conduct the SPTs. The observed N-values, hammer efficiency, and N_{60} are noted on the boring logs.
MC	**Modified California** sampling consists of 3-inch, outside-diameter, split-spoon sampler (ASTM G3550) driven similarly to the SPT sampling method described above. A sampler diameter correction factor of 0.44 is applied to calculate the equivalent SPT N_{60} value per Lacroix and Horn, 1973.
CORE	**Rock Coring** interval
SH	**Shelby Tube** is a 3-inch, inner-diameter, thin-walled, steel tube push sampler (ASTM D1587) used to collect relatively undisturbed samples of fine-grained soils.
WDCP	**Wildcat Dynamic Cone Penetrometer** (WDCP) test consists of driving 1.1-inch diameter, steel rods with a 1.4-inch diameter, cone tip into the ground using a 35-pound drop hammer with a 15-inch free-fall height. The number of blows required to drive the steel rods is recorded for each 10 centimeters (3.94 inches) of penetration. The blow count for each interval is then converted to the corresponding SPT N_{60} values.
DCP	**Dynamic Cone Penetrometer** (DCP) test consists of driving a 20-millimeter diameter, hardened steel cone on 16-millimeter diameter steel rods into the ground using a 10-kilogram drop hammer with a 460-millimeter free-fall height. The depth of penetration in millimeters is recorded for each drop of the hammer.
POCKET PEN. (tsf)	**Pocket Penetrometer** test is a hand-held instrument that provides an approximation of the unconfined compressive strength in tons per square foot (tsf) of cohesive, fine-grained soils.

CONTACTS

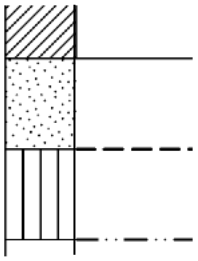

Observed (measured) contact between soil or rock units.

Inferred (approximate) contact between soil or rock units.

Transitional (gradational) contact between soil or rock units.

ADDITIONAL NOTATIONS

Italics	Notes drilling action or digging effort
{ Braces }	Interpretation of material origin/geologic formation (e.g. { Base Rock } or { Columbia River Basalt })

CARLSON CGT GEOTECHNICAL 503-601-8250

All measurements are approximate.

STRONG PROPERTY - PORTLAND, OREGON
Project Number G2305938

FIGURE A2
Soil Classification

Classification of Terms and Content

NAME: Group Name and Symbol
Relative Density or Consistency
Color
Moisture Content
Plasticity
Other Constituents
Other: Grain Shape, Approximate Gradation
Organics, Cement, Structure, Odor, etc.
Geologic Name or Formation

Grain Size

		U.S. Standard Sieve
Fines		<#200 (0.075 mm)
Sand	Fine	#200 - #40 (0.425 mm)
	Medium	#40 - #10 (2 mm)
	Coarse	#10 - #4 (4.75 mm)
Gravel	Fine	#4 - 0.75 inch
	Coarse	0.75 inch - 3 inches
Cobbles		3 to 12 inches
Boulders		> 12 inches

Coarse-Grained (Granular) Soils

Relative Density

SPT N_{60}-Value	Density
0 - 4	Very Loose
4 - 10	Loose
10 - 30	Medium Dense
30 - 50	Dense
>50	Very Dense

Minor Constituents

Percent by Volume	Descriptor	Example
0 - 5%	"Trace" as part of soil description	"trace silt"
5 - 15%	"With" as part of group name	"**POORLY GRADED SAND WITH SILT**"
15 - 49%	Modifier to group name	"**SILTY SAND**"

Fine-Grained (Cohesive) Soils

SPT N_{60}-Value	Torvane tsf Shear Strength	Pocket Pen tsf Unconfined	Consistency	Manual Penetration Test
<2	<0.13	<0.25	Very Soft	Thumb penetrates more than 1 inch
2 - 4	0.13 - 0.25	0.25 - 0.50	Soft	Thumb penetrates about 1 inch
4 - 8	0.25 - 0.50	0.50 - 1.00	Medium Stiff	Thumb penetrates about ¼ inch
8 - 15	0.50 - 1.00	1.00 - 2.00	Stiff	Thumb penetrates less than ¼ inch
15 - 30	1.00 - 2.00	2.00 - 4.00	Very Stiff	Readily indented by thumbnail
>30	>2.00	>4.00	Hard	Difficult to indent by thumbnail

Minor Constituents

Percent by Volume	Descriptor	Example
0 - 5%	"Trace" as part of soil description	"trace fine-grained sand"
5 - 15%	"Some" as part of soil description	"some fine-grained sand"
15 - 30%	"With" as part of group name	"**SILT WITH SAND**"
30 - 49%	Modifier to group name	"**SANDY SILT**"

Moisture Content

Dry: Absence of moisture, dusty, dry to the touch

Moist: Leaves moisture on hand

Wet: Visible free water, likely from below water table

	Plasticity	Dry Strength	Dilatancy	Toughness
ML	Non to Low	Non to Low	Slow to Rapid	Low, can't roll
CL	Low to Medium	Medium to High	None to Slow	Medium
MH	Medium to High	Low to Medium	None to Slow	Low to Medium
CH	Medium to High	High to Very High	None	High

Structure

Stratified: Alternating layers of material or color >6 mm thick

Laminated: Alternating layers < 6 mm thick

Fissured: Breaks along definite fracture planes

Slickensided: Striated, polished, or glossy fracture planes

Blocky: Cohesive soil that can be broken down into small angular lumps which resist further breakdown

Lenses: Has small pockets of different soils, note thickness

Homogeneous: Same color and appearance throughout

Visual-Manual Classification

Major Divisions			Group Symbols	Typical Names
Coarse Grained Soils: More than 50% retained on No. 200 sieve	Gravels: 50% or more *retained* on the No. 4 sieve	Clean Gravels	GW	Well-graded gravels and gravel/sand mixtures, little or no fines
			GP	Poorly-graded gravels and gravel/sand mixtures, little or no fines
		Gravels with Fines	GM	Silty gravels, gravel/sand/silt mixtures
			GC	Clayey gravels, gravel/sand/clay mixtures
	Sands: More than 50% *passing* the No. 4 sieve	Clean Sands	SW	Well-graded sands and gravelly sands, little or no fines
			SP	Poorly-graded sands and gravelly sands, little or no fines
		Sands with Fines	SM	Silty sands, sand/silt mixtures
			SC	Clayey sands, sand/clay mixtures
Fine-Grained Soils: 50% or more Passes No. 200 Sieve	Silt and Clays Low Plasticity Fines		ML	Inorganic silts, rock flour, clayey silts
			CL	Inorganic clays of low to medium plasticity, gravelly clays, sandy clays, lean clays
			OL	Organic soil of low plasticity
	Silt and Clays High Plasticity Fines		MH	Inorganic silts, clayey silts
			CH	Inorganic clays of high plasticity, fat clays
			OH	Organic soil of medium to high plasticity
Highly Organic Soils			PT	Peat, muck, and other highly organic soils

CARLSON CGT GEOTECHNICAL 503-601-8250

References:

ASTM D2487 Standard Practice for Classification of Soils for Engineering Purposes (Unified Soil Classification System)
ASTM D2488 Standard Practice for Description and Identification of Soils (Visual-Manual Procedure)
Terzaghi, K., and Peck, R.B., 1948, Soil Mechanics in Engineering Practice, John Wiley & Sons.

Carlson Geotechnical
A Division of Carlson Testing, Inc.
www.carlsontesting.com

FIGURE A3

Boring B-1

CLIENT James Lee
PROJECT NAME Strong Property
PROJECT NUMBER G2305938
PROJECT LOCATION North Williams Ave & N Alberta St - Portland, OR
DATE STARTED 7/28/23
GROUND ELEVATION 102 ft
ELEVATION DATUM Surface of North Alberta Street = 100'
WEATHER Sunny, 80°F
SURFACE Grass
LOGGED BY AET
REVIEWED BY BMW
DRILLING CONTRACTOR Western States Soil Conservation
SEEPAGE ---
EQUIPMENT GeoProbe 7822DT
GROUNDWATER DURING DRILLING ---
DRILLING METHOD Mud Rotary
GROUNDWATER AFTER DRILLING ---

ELEVATION (ft)	GRAPHIC LOG	GROUP SYMBOL	MATERIAL DESCRIPTION	GROUNDWATER	DEPTH (ft)	SAMPLE TYPE NUMBER	RECOVERY % (RQD)	BLOW COUNTS (N_{SPT} VALUE)	N_{60} VALUE ETR_{Hammer} = 74.3%	DRY UNIT WT. (pcf)
		OL	**ORGANIC SOIL:** Brown, moist, low plasticity, abundant rootlets.		0					
100		ML	**SILT WITH SAND:** Medium stiff, light brown, moist, low plasticity, with fine- to medium grained sand, some lenses of coarse-grained sand.		2					
					4	SPT 1	33	5-6-6 (12)	11	
98		SM	**POORLY GRADED SAND WITH SILT:** Medium dense, dark gray, moist, fine- to coarse-grained, with silt fines.							
					6	SPT 2	33	4-6-6 (12)	11	
96										
94										
92										

▲ SPT N_{60} VALUE ▲
PL LL MC
☐ FINES CONTENT (%) ☐
0 20 40 60 80 100

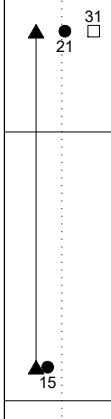

- Boring terminated at 6½ feet bgs.
- No groundwater or caving encountered.
- Boring loosely backfilled with bentonite upon completion.

CGT BOREHOLE DRAFT LOGS.GPJ 8/7/23 DRAFTED BY: AET

Carlson Geotechnical
A Division of Carlson Testing, Inc.
www.carlsontesting.com

FIGURE A4
Boring B-2

CLIENT James Lee
PROJECT NAME Strong Property
PROJECT NUMBER G2305938
PROJECT LOCATION North Williams Ave & N Alberta St - Portland, OR
DATE STARTED 7/28/23
GROUND ELEVATION 100 ft
ELEVATION DATUM Surface of North Alberta Street = 100'
WEATHER Sunny, 80°F
SURFACE Grass Fill
LOGGED BY AET
REVIEWED BY BMW
DRILLING CONTRACTOR Western States Soil Conservation
SEEPAGE ---
EQUIPMENT GeoProbe 7822DT
GROUNDWATER DURING DRILLING ---
DRILLING METHOD Mud Rotary
GROUNDWATER AFTER DRILLING ---

ELEVATION (ft)	GRAPHIC LOG	GROUP SYMBOL	MATERIAL DESCRIPTION	GROUNDWATER	DEPTH (ft)	SAMPLE TYPE NUMBER	RECOVERY % (RQD)	BLOW COUNTS (N_{SPT} VALUE)	N_{60} VALUE ETR_{Hammer} = 74.3%	DRY UNIT WT. (pcf)	▲ SPT N_{60} VALUE ▲ PL LL MC ☐ FINES CONTENT (%) ☐ 0 20 40 60 80 100
		OL FILL	**ORGANIC SOIL FILL:** Brown, moist, low plasticity, abundant rootlets.		0						
		ML FILL	**SILT FILL:** Brown, moist, low plasticity, trace angular gravel fragments up to ½-inch in diameter.								
			POORLY GRADED SAND: Loose to medium dense, dark gray, moist, fine- to coarse-grained, trace fines.								
98					2						
		SP				SPT 1	33	4-3-5 (8)	7		▲ 19
96					4						
						SPT 2	33	5-6-5 (11)	10		▲ 18
94					6						
92			• Boring terminated at 6½ feet bgs. • No groundwater or caving encountered. • Boring loosely backfilled with bentonite upon completion.								
90											

CGT BOREHOLE DRAFT LOGS.GPJ 8/7/23 DRAFTED BY: aet

Carlson Geotechnical
A Division of Carlson Testing, Inc.
www.carlsontesting.com

FIGURE A5
Boring B-3

CLIENT James Lee
PROJECT NAME Strong Property
PROJECT NUMBER G2305938
PROJECT LOCATION North Williams Ave & N Alberta St - Portland, OR
DATE STARTED 7/28/23
GROUND ELEVATION 100 ft
ELEVATION DATUM Surface of North Alberta Street = 100'
WEATHER Sunny, 80°F
SURFACE Grass Fill
LOGGED BY AET
REVIEWED BY BMW
DRILLING CONTRACTOR Western States Soil Conservation
SEEPAGE ---
EQUIPMENT GeoProbe 7822DT
GROUNDWATER DURING DRILLING ---
DRILLING METHOD Mud Rotary
GROUNDWATER AFTER DRILLING ---

ELEVATION (ft)	GRAPHIC LOG	GROUP SYMBOL	MATERIAL DESCRIPTION	GROUNDWATER	DEPTH (ft)	SAMPLE TYPE NUMBER	RECOVERY % (RQD)	BLOW COUNTS (N_{SPT} VALUE)	N_{60} VALUE ETR_{Hammer} = 74.3%	DRY UNIT WT. (pcf)
95		OL FILL	**ORGANIC SOIL FILL:** Brown, moist, low plasticity, abundant rootlets.		0					
		ML FILL	**SILT FILL:** Brown/gray mottled, moist, low plasticity, some fine-grained sand, trace burnt wood fragments, some angular gravel up to ½-inch in diameter.		5	SPT 1	33	11-12-12 (24)	22	
90		CL FILL	**LEAN CLAY WITH GRAVEL FILL:** Dark gray, moist, medium plasticity, with subrounded to subangular gravel up to ½-inch in diameter, some fine-grained sand, faint petroleum odor.		10	SPT 2	44	8-14-6 (20)	19	
						SPT 3	6	7-11-11 (22)	20	
85			**POORLY GRADED SAND:** Medium dense, dark gray, moist, fine- to coarse-grained, trace fines.		15	SPT 4	17	6-6-7 (13)	13	
80					20	SPT 5	22	7-9-10 (19)	20	
			Some gravel fragments up to 1-inch in diameter below 20 feet bgs.			SPT 6	33	10-13-13 (26)	31	
75					25	SPT 7	33	23-15-11 (26)	31	
70					30	SPT 8	33	9-15-10 (25)	29	
65		SP			35					
60					40	SPT 9	11	19-23-15 (38)	47	
55					45					
50			Very dense below 50 feet bgs.		50	SPT 10	0	14-29-35 (64)	79	
45			• Boring terminated at 51½ feet bgs. • No groundwater or caving encountered. • Boring loosely backfilled with bentonite upon completion.							

▲ SPT N_{60} VALUE ▲
PL LL MC
☐ FINES CONTENT (%) ☐
0 20 40 60 80 100

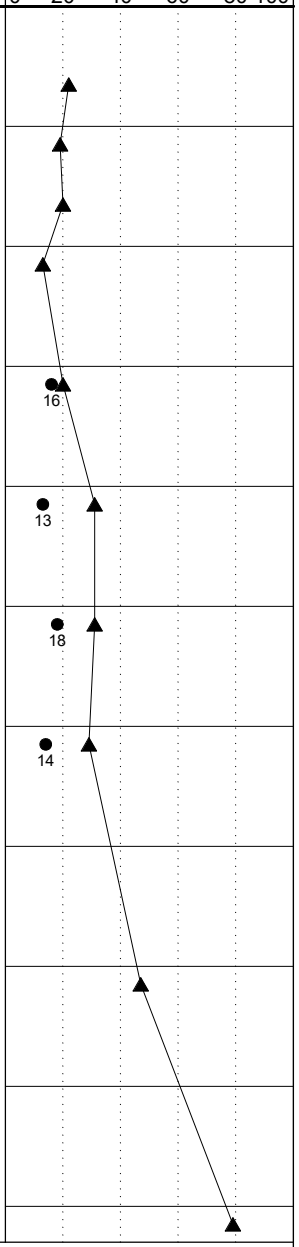

CGT BOREHOLE DRAFT LOGS.GPJ 8/7/23 DRAFTED BY: aet

LU 23-103655 DZ
Exhibit A7

Carlson Geotechnical
A Division of Carlson Testing, Inc.
www.carlsontesting.com

FIGURE A6
Boring B-4

CLIENT James Lee
PROJECT NAME Strong Property
PROJECT NUMBER G2305938
PROJECT LOCATION North Williams Ave & N Alberta St - Portland, OR
DATE STARTED 7/28/23
GROUND ELEVATION 100.75 ft
ELEVATION DATUM Surface of North Alberta Street = 100'
WEATHER Sunny, 80°F
SURFACE Grass Fill
LOGGED BY AET
REVIEWED BY BMW
DRILLING CONTRACTOR Western States Soil Conservation
SEEPAGE ---
EQUIPMENT GeoProbe 7822DT
GROUNDWATER DURING DRILLING ---
DRILLING METHOD Hollow Stem 4¼-inch ID Auger
GROUNDWATER AFTER DRILLING ---

ELEVATION (ft)	GRAPHIC LOG	GROUP SYMBOL	MATERIAL DESCRIPTION	GROUNDWATER	DEPTH (ft)	SAMPLE TYPE NUMBER	RECOVERY % (RQD)	BLOW COUNTS (N_{SPT} VALUE)	N_{60} VALUE ETR_{Hammer} = 74.3%	DRY UNIT WT. (pcf)
100		OL FILL	**ORGANIC SOIL FILL:** Brown, moist, low plasticity, abundant rootlets, trace gravel fragments up to ½-inch in diameter.		0					
			POORLY GRADED SAND: Loose, brown, moist, fine- to coarse-grained, trace rounded gravel up to ½-inch in diameter, trace silt fines.			SPT 1	33	4-4-4 (8)	7	
					5					
95						SPT 2	33	4-3-3 (6)	6	
						SPT 3	22	4-4-5 (9)	8	
					10					
90			Medium dense below 10 feet bgs.			SPT 4	33	9-10-8 (18)	18	
		SP			15					
85										
					20					
80						SPT 5	33	8-9-10 (19)	22	
					25					
75						SPT 6	33	5-7-7 (14)	16	
70										

▲ SPT N_{60} VALUE ▲
PL LL MC
☐ FINES CONTENT (%) ☐
0 20 40 60 80 100

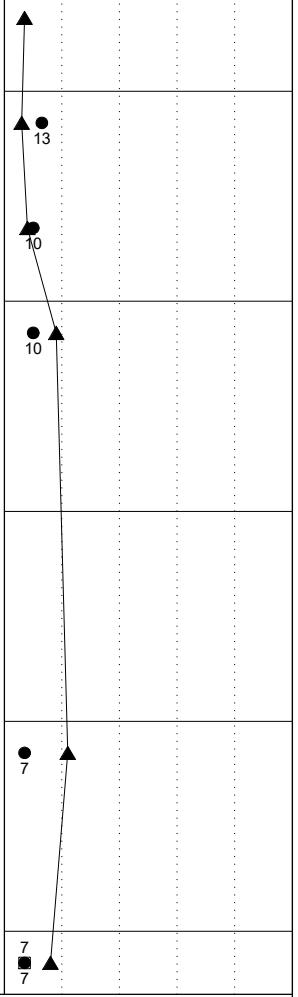

- Boring terminated at 26½ feet bgs due to practical refusal of hollow stem auger on dense sand.
- No groundwater or caving encountered.
- Infiltration test IT-1 performed at 25 feet bgs. Reference Appendix B for test results. SPT 6 conducted following completion of infiltration test.
- Boring loosely backfilled with bentonite upon completion.

CGT BOREHOLE DRAFT LOGS.GPJ 8/7/23 DRAFTED BY: aet

Carlson Geotechnical
A Division of Carlson Testing, Inc.
www.carlsontesting.com

FIGURE A7

Boring B-5

CLIENT James Lee
PROJECT NAME Strong Property
PROJECT NUMBER G2305938
PROJECT LOCATION North Williams Ave & N Alberta St - Portland, OR
DATE STARTED 7/28/23
GROUND ELEVATION 100.5 ft
ELEVATION DATUM Surface of North Alberta Street = 100'
WEATHER Sunny, 80°F
SURFACE Grass Fill
LOGGED BY AET
REVIEWED BY BMW
DRILLING CONTRACTOR Western States Soil Conservation
SEEPAGE ---
EQUIPMENT GeoProbe 7822DT
GROUNDWATER DURING DRILLING ---
DRILLING METHOD Mud Rotary
GROUNDWATER AFTER DRILLING ---

ELEVATION (ft)	GRAPHIC LOG	GROUP SYMBOL	MATERIAL DESCRIPTION	GROUNDWATER	DEPTH (ft)	SAMPLE TYPE NUMBER	RECOVERY % (RQD)	BLOW COUNTS (N_{SPT} VALUE)	N_{60} VALUE ETR_{Hammer} = 74.3%	DRY UNIT WT. (pcf)
100		OL FILL	**ORGANIC SOIL FILL:** Brown, moist, low plasticity, abundant rootlets, trace gravel fragments up to ½-inch in diameter.		0					
			POORLY GRADED SAND FILL: Dark gray, moist, fine- to coarse-grained, trace fines.			SPT 1	33	1-2-4 (6)	6	
					5					
95		SP FILL	approximate 2-foot void encountered during sampling. Very loose below 5 feet bgs.			SPT 2	0	0-0-0 (0)		
						SPT 3	11	0-0-0 (0)		
					10					
90						SPT 4	22	0-0-1 (1)	1	
			POORLY GRADED SAND: Loose, dark gray, moist, fine- to coarse-grained, trace fines.			SPT 5	33	3-4-4 (8)	8	
		SP			15					
85						SPT 6	33	2-4-4 (8)	8	

▲ SPT N_{60} VALUE ▲
PL LL MC
☐ FINES CONTENT (%) ☐
0 20 40 60 80 100

20
17

- Boring terminated at 16½ feet bgs.
- No groundwater or caving encountered.
- Boring loosely backfilled with bentonite upon completion.

CGT BOREHOLE DRAFT LOGS.GPJ 8/7/23 DRAFTED BY: aet

LU 23-103655 DZ
Exhibit A7

Carlson Geotechnical
A Division of Carlson Testing, Inc.
www.carlsontesting.com

FIGURE A8
Boring B-6

CLIENT James Lee
PROJECT NAME Strong Property
PROJECT NUMBER G2305938
PROJECT LOCATION North Williams Ave & N Alberta St - Portland, OR
DATE STARTED 7/28/23
GROUND ELEVATION 100.5 ft
ELEVATION DATUM Surface of North Alberta Street = 100'
WEATHER Sunny, 80°F
SURFACE Grass Fill
LOGGED BY AET
REVIEWED BY BMW
DRILLING CONTRACTOR Western States Soil Conservation
SEEPAGE ---
EQUIPMENT GeoProbe 7822DT
GROUNDWATER DURING DRILLING ---
DRILLING METHOD Hollow Stem 6¼-inch Auger
GROUNDWATER AFTER DRILLING ---

ELEVATION (ft)	GRAPHIC LOG	GROUP SYMBOL	MATERIAL DESCRIPTION	GROUNDWATER	DEPTH (ft)	SAMPLE TYPE NUMBER	RECOVERY % (RQD)	BLOW COUNTS (N_{SPT} VALUE)	N_{60} VALUE ETR_{Hammer} = 74.3%	DRY UNIT WT. (pcf)	▲ SPT N_{60} VALUE ▲ PL LL MC ☐ FINES CONTENT (%) ☐ 0 20 40 60 80 100
100		OL FILL	**ORGANIC SOIL FILL:** Brown, moist, low plasticity, abundant rootlets, trace gravel fragments up to ¼-inch in diameter.		0						
		ML	**SILT:** *Medium stiff*, brown, moist to dry, low plasticity, some fine-grained sand.								
		ML	**SANDY SILT:** Medium stiff, brown/gray, moist, medium plasticity, with fine- to coarse-grained sand.		2						
98						SPT 1	6	2-2-4 (6)	6		
					4						
96											
					6	SPT 2	11	3-4-4 (8)	7		14 58
94											
92											

- Boring terminated at 6½ feet bgs.
- No groundwater or caving encountered.
- Infiltration test IT-2 performed at 5 feet bgs. Reference Appendix B for test results. SPT 2 conducted following completion of infiltration test.
- Boring loosely backfilled with bentonite upon completion.

CGT BOREHOLE DRAFT LOGS.GPJ 8/7/23 DRAFTED BY: aet

Carlson Geotechnical

A division of Carlson Testing, Inc.
Phone: (503) 601-8250
www.carlsontesting.com

Bend Office	**(541) 330-9155**
Eugene Office	**(541) 345-0289**
Salem Office	**(503) 589-1252**
Tigard Office	**(503) 684-3460**

Appendix B: Results of Infiltration Testing

Strong Property - North Portland
4931 North Williams Avenue
Portland, Oregon

CGT Project Number G2305938

August 7, 2023

Prepared For:

James Lee
Community Development Partners
126 NE Alberta Street, Suite 202
Portland, Oregon, 97211

Prepared by
Carlson Geotechnical

B.1.0 INTRODUCTION

The project civil engineer Mr. Casey Jones, P.E., of Vega Civil Engineering, LLC, requested two infiltration tests be conducted in the southwestern portion of the site. Mr. Jones requested the tests be conducted at depths of about 5 and 30 feet below ground surface (bgs). The tests were performed in drilled hollow-stem auger borings, designated B-4 and B-6 on the Site Plan, which is attached to the main report as Figure 2.

B.2.0 TEST PROCEDURE

The infiltration tests (IT-1 and IT-2) were performed in general accordance with the Encased Falling Head Infiltration Test method as described in Chapter 2 of the 2020 City of Portland Stormwater Management Manual (PSWMM).

Tests IT-1 and IT-2 were performed within 4¼-inch diameter and 6¼-inch diameter hollow stem augers, respectively, as allowed by the referenced method. Once each drilled boring was advanced to the test depth, approximately 2 inches of gravel was added to the bottom of the auger and then the auger was filled with approximately 12 inches of water. In IT-1 (B-4), the drill rig encountered practical refusal with the hollow stem auger on relatively dense sands at a depth of about 25 feet bgs. Therefore the infiltration test for IT-1 was conducted at this depth.

In IT-1, the water infiltrated into the subsurface materials in less than 10 minutes, this was repeated a second time with similar results; therefore, we immediately proceeded with the infiltration test. A steady source of water (hose connected to a water tank) was introduced into the auger at an inflow rate of 2½ gallons per minute (flow rate was measured using a 5-gallon bucket and a stopwatch). Approximately 275 gallons of water was introduced into the hole for 1 hour and 50 minutes and we were unable to achieve any measurable head of water during that time. The test was then terminated.

In IT-2, the soils were allowed to soak for 1 hour in accordance with the test method. After the soaking period, the water level was re-established to 12 inches and the drop in water level was recorded at 10-minute intervals for 1 hour. This process was repeated two additional times, resulting in three trials. Measurements were taken with a tape measure and recorded to the nearest one-eighth of an inch.

Table B1 Results of Infiltration Test IT-1

Location:	Strong Property	Date:	7-28-2023	Exploration Number:	B-4
Test Method:	City of Portland Encased Falling Head	Inner Diameter of pipe	4¼ inches	Infiltration Test Depth:	25 feet bgs
Soil at infiltration test depth:	Poorly Graded Sand		See exploration log for detail		
Test Start Time:	1:38 PM	Notes:	Water inflow = 2½ gallons per minute No head build up after 1+ hours. Test terminated following introduction of approximately 275 gallons of water.		
Test End Time:	3:28 PM				
Head During Test:	None				

Table B2 Results of Infiltration Test IT-2

	Location:	Portland - Strong Property		Date:	7/28/2023	Exploration Number:	B-6
	Test Method:	City of Portland Encased Falling Head		Inner Diameter of Pipe:	6¼ inches	Infiltration Test Depth:	5 feet bgs
	Soil at infiltration test depth:		Silty Sand		see exploration log for detail		

	Time	Time Interval (Minutes)	Measurement (inches)*	Drop in Water level (inches)	Infiltration Rate** (inches per hour)	Remarks
Trial 1	11:44 AM	10	46 5/8	---	---	Water adjusted to provide 12 inch head
	11:54 AM	10	47 5/8	1	---	
	12:04 PM	10	48 1/2	7/8	---	
	12:14 PM	10	49 1/4	3/4	---	
	12:24 PM	10	50	3/4	---	
	12:34 PM	10	50 3/4	3/4	---	
	12:44 PM	10	51 1/2	3/4	**4 7/8**	Trial 1 concluded.
Trial 2	12:59 PM	10	46 5/8	---	---	Water adjusted to provide 12 inch head
	1:09 PM	10	47 3/8	3/4	---	
	1:19 PM	10	48 1/8	3/4	---	
	1:29 PM	10	48 7/8	3/4	---	
	1:39 PM	10	49 3/8	1/2	---	
	1:49 PM	10	49 7/8	1/2	---	
	1:59 PM	10	50 3/8	1/2	**3 3/4**	Trial 2 concluded.
Trial 3	2:02 PM	10	46 1/8	---	---	Water adjusted to provide 12 inch head
	2:12 PM	10	46 5/8	1/2	---	
	2:22 PM	10	47 1/8	1/2	---	
	2:32 PM	10	47 5/8	1/2	---	
	2:42 PM	10	48 1/8	1/2	---	
	2:52 PM	10	48 5/8	1/2	---	
	3:02 PM	10	49 1/8	1/2	**3**	Trial 3 concluded

*Measured to nearest 1/8 of an inch

** Values calculated are raw (unfactored) rates.

B.3.0 DISCUSSION

B.3.1 Measured Infiltration Rates

In IT-1, as indicated above, we were unable to develop a head of water using a steady inflow rate (2½ gallons per minute) during the testing period of 1 hour and 50 minutes. Using the equation presented for the direct infiltration test method in the referenced manual, the raw measured infiltration rate is equal to 2,436 inches per hour at the test location and depth (25 feet bgs). We recommend the raw measured infiltration rate be assigned as 100 inches per hour as means to add some conservatism in design. In the event a larger infiltration rate is desired, we recommend an increased scale of testing be performed using a larger volume of water delivered from a steady water source (e.g. water truck, fire hydrant, etc.).

In IT-2, the average raw (unfactored), infiltration rate[1] was approximately 3 inches per hour at the tested location and depth (5 feet bgs).

Per Table 2-4 of the PSWMM, a minimum allowable factor of safety (FoS) of 2.0 shall be applied to the field-tested infiltration rate(s) where the encased falling head test method is used. We recommend this FoS be applied to calculate the design infiltration rate for use in design of the stormwater infiltration system(s) to be constructed at/near the test location(s) and depth(s).

Once the design is completed, we recommend the infiltration system design (provided by others) and location be reviewed by the geotechnical engineer. If the location and/or depth of the system(s) change from what was indicated at the time of our fieldwork, additional testing may be recommended.

B.3.2 Seasonal High Groundwater Level

As indicated in Table 2-2 of the referenced stormwater manual, a minimum "seasonal correction factor" equal to 6 feet shall be applied when groundwater measurements are made between the months of June and February. Additionally, Figure 2-3 of the referenced stormwater manual indicates that a minimum of 5 feet of separation (measured vertically) is required between the base of the stormwater facility and the "seasonal high groundwater level".

Groundwater was not encountered within depths explored at the site, and no indications (e.g. mottling) of seasonal fluctuations of groundwater were observed in the site soils. Based on our explorations, our experience in the area, review of local water well logs (see Section 2.3.3 of main body of report), and review of the site's geologic setting, we anticipate the groundwater level in the area is at depths in excess of 100 feet bgs. Accordingly, the groundwater level (phreatic surface) is not anticipated to be a factor for infiltration facility design.

[1] Per the referenced infiltration test method: "The average infiltration rate over the last trial should be used to calculate the unfactored infiltration rate."

Preliminary Stormwater Report

Strong Property Housing

4947 N Williams Street
Portland, OR 97217

Date:
November 13th, 2023
Revised:
January 23rd, 2024

Owner:
Strong Property
Portland, OR

Associated Permit Numbers:
2023-033320-000-00-EA

Engineer of Record:
Martha Williamson, PE
Vega Civil Engineering, LLC
1300 SE Stark St #201
Portland, OR 97214
martha@vegacivil.com
(503) 662-1901

I hereby certify that this Stormwater Management Report for Strong Property Housing has been prepared by me or under my supervision and meets minimum standards of the City of Portland and normal standards of engineering practice. I hereby acknowledge that the jurisdiction does not and will not assume liability for the sufficiency, suitability, or performance of drainage facilities designed by me.

Table of Contents

Project Overview & Description	2
Methodology	2
Analysis	3
Engineering Conclusions	3

Appendices

A Stormwater Facility Details / Exhibits
- Utility Plan
- Catchment Map
- Drywell Detail

B Calculations
- HydroCAD Report

C Associated Reports
- Geotechnical Investigation Report

D Stormwater Alternate
- Alternate stormwater report for flow-through planter

Project Overview and Description

Location	4947 N Williams Avenue
Site Area	40,911 SF
Vicinity Map	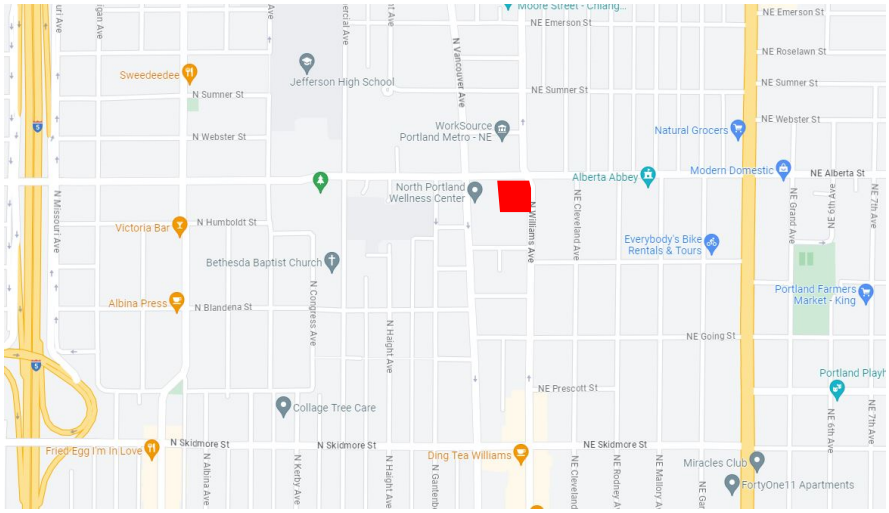
Zoning	CM2 – Commercial Mixed-Use 2
Development Type	Affordable Housing
Watershed	Willamette River – Holladay-Sullivan
Existing Conditions	Existing site includes an existing single family residential building, general landscaping with paved walkways and a driveway.
Development Description	New construction of affordable housing with 75 units and site improvements.

Methodology

Existing Drainage	The existing site drains north and east in the paved surfaces. Stormwater sheet flows to the ROW.
Infiltration Testing Results	Geotechnical investigation found an unfactored infiltration rate far exceeding 100 in/hr. A factor of safety of 2 has been applied to result in a design infiltration rate of 50 in/hr.
Stormwater Hierarchy Justification	The 100-year storm will be fully infiltrated onsite via a single deep drywell, which will fall under Category 2 of the Stormwater Hierarchy.
Proposed Stormwater Management System	Stormwater runoff from proposed impervious and landscape areas of the site will be collected via area drains and downspouts and piped to a sedimentation manhole; water will then infiltrate via a drywell system.

Analysis

Relevant Design Storms	10yr – 3.4 inches 100yr – 4.4 inches
Computation Methods & Software	HydroCAD was used for sizing the stormwater facilities.
Safety Factors	A safety factor of 2 was used for the tested infiltration rate.
Curve Numbers	A CN of 98 was used for the entire site as it is primarily impervious area.
Time of Concentration	5 min.
Escape Route or Inundation Level for 24-hour 100-yr event	The drywell system has been designed to fully infiltrate the 100-year storm event.

Table 1 – Catchment and Facility Summary

Catchment or Facility ID	Impervious Area Type	Area (sf)	Ownership (private/public)	Facility Type	Facility Size (sf)
Site	Roof, parking lot and walkways	40,911	Private	Drywell	(1) x 48" dia. x 40' overall depth

Engineering Conclusions

Water Quality	The proposed development will meet the requirements for water quality per the 2020 City of Portland Stormwater Management Manual
Water Quantity	The proposed development will meet the requirements for water quantity per the 2020 City of Portland Stormwater Management Manual
Upstream / Downstream Impacts	The proposed development will not have an impact on upstream or downstream systems.

Appendix A - Stormwater Facility Details / Exhibits

Utility Plan
Catchment Map
Drywell Detail

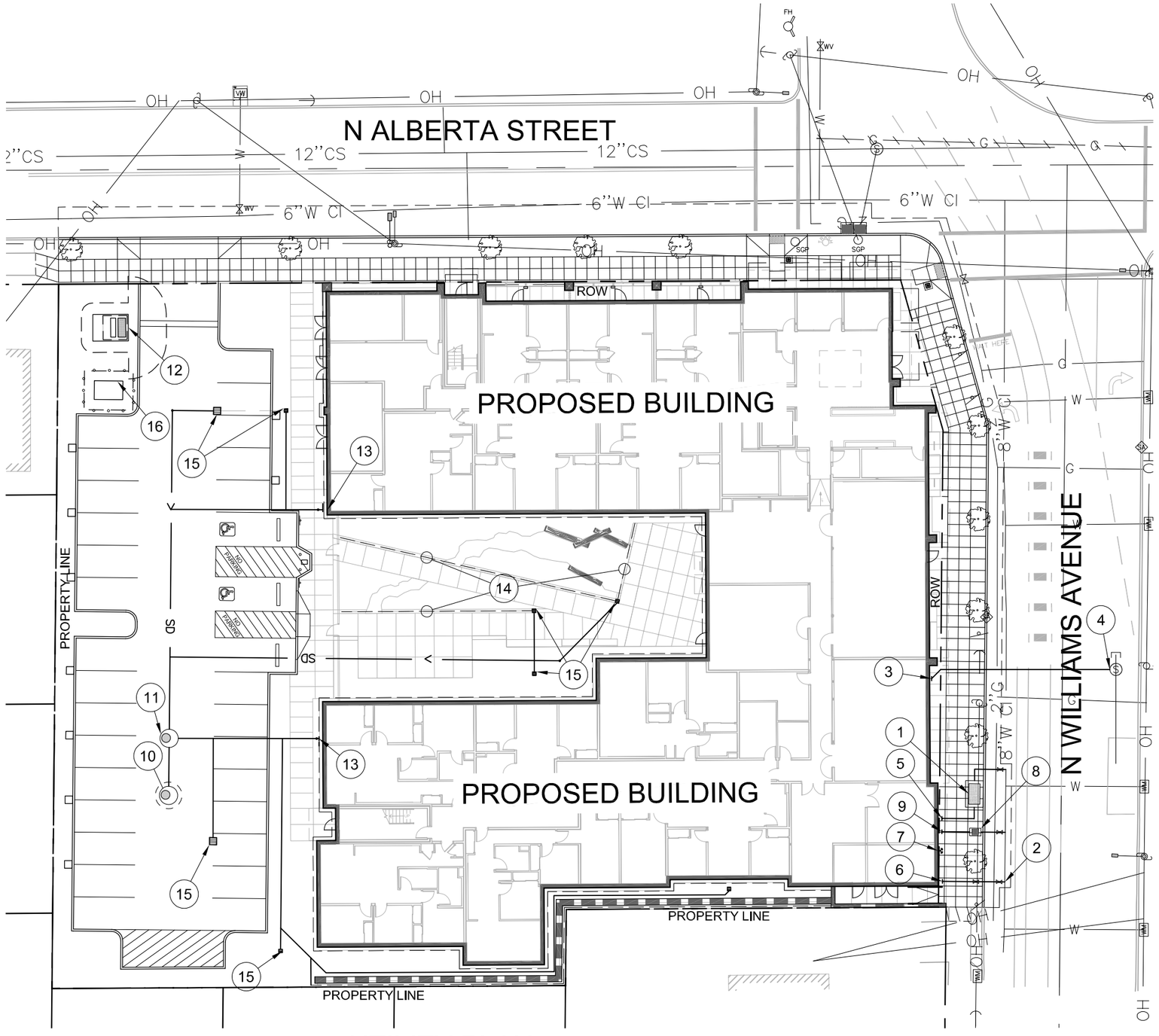

UTILITY PLAN

SCALE: 1"=30'

CONSTRUCTION NOTES

1. NEW 4" WATER METER, BY PORTLAND WATER BUREAU.
2. NEW 6" FIRE LINE, BY PORTLAND WATER BUREAU.
3. NEW SANITARY CONNECTION FROM BUILDING
4. 8" SEWER CONNECTION TO COMBINED SEWER MAINTENANCE HOLE.
5. 4" DOMESTIC WATER CONNECTION TO BUILDING. PREMISES-ISOLATION (PI) DCVA TO BE INSTALLED IN BUILDING PER WATER BUREAU REQUIREMENTS.
6. 6" FIRE CONNECTION TO BUILDING. PREMISES-ISOLATION (PI) DCDA TO BE INSTALLED IN BUILDING PER WATER BUREAU REQUIREMENTS.
7. FIRE DEPARTMENT CONNECTION MOUNTED TO BUILDING FACE.
8. IRRIGATION METER, BY PORTLAND WATER BUREAU.
9. IRRIGATION CONNECTION TO BUILDING. PREMISES-ISOLATION (PI) DCDA TO BE INSTALLED IN BUILDING PER WATER BUREAU REQUIREMENTS.
10. DRYWELL, 10' PERFORATED SECTION, 40' TOTAL DEPTH
11. SEDIMENT MANHOLE, 10' TOTAL DEPTH.
12. PP&L PAD-MOUNTED TRANSFORMER VAULT.
13. STORM CONNECTION FROM BUILDING FOR ROOF DRAINAGE.
14. FRENCH DRAIN.
15. AREA DRAIN.
16. PAD-MOUNTED BATTERY ENERGY STORAGE SYSTEM.

STORMWATER NARRATIVE

PRIVATE SITE

STORMWATER RUNOFF FROM PROPOSED ROOF AND PAVED SURFACES WILL BE DIRECTED TO THE DRYWELL SYSTEM. THE DRYWELL SYSTEM IS DESIGNED TO FULLY INFILTRATE THE 100-YR STORM EVENT.

PUBLIC STREET IMPROVEMENTS

STORMWATER RUNOFF IN THE PUBLIC RIGHT-OF-WAY FOLLOWS THE EXISTING DRAINAGE PATTERN AND IS COLLECTED VIA NEW CATCH BASINS AND DIRECTED TO THE PUBLIC COMBINED SEWER SYSTEM.

UTILITY CONTACTS

ELECTRICAL
CLEO NARANJO
INTERFACE ENGINEERING, INC
CLEON@INTERFACEENG.COM
(503) 382-2724

BES
ROD KRAUTER
BUREAU OF ENVIRONMENTAL SERVICES
RODNEY.KRAUTER@PORTLANDOREGON.GOV
(503) 823-2073

WATER
KARI ANN SPOON
PORTLAND WATER BUREAU
KARIANN.SPOON@PORTLANDOREGON.GOV
(503) 865-6370

N

0 30 60

1 INCH = 30 FEET

HOLST

STRONG PROPERTY HOUSING
4931-4947 N WILLIAMS AVE
PORTLAND, OR 97217

job no. 23-004

VEGA CIVIL ENGINEERING LLC
503.662.1901 | WWW.VEGACIVIL.COM

11/13/23

title: UTILITY PLAN

sheet: C1.00

LU 23-103655 DZ
Exhibit A8

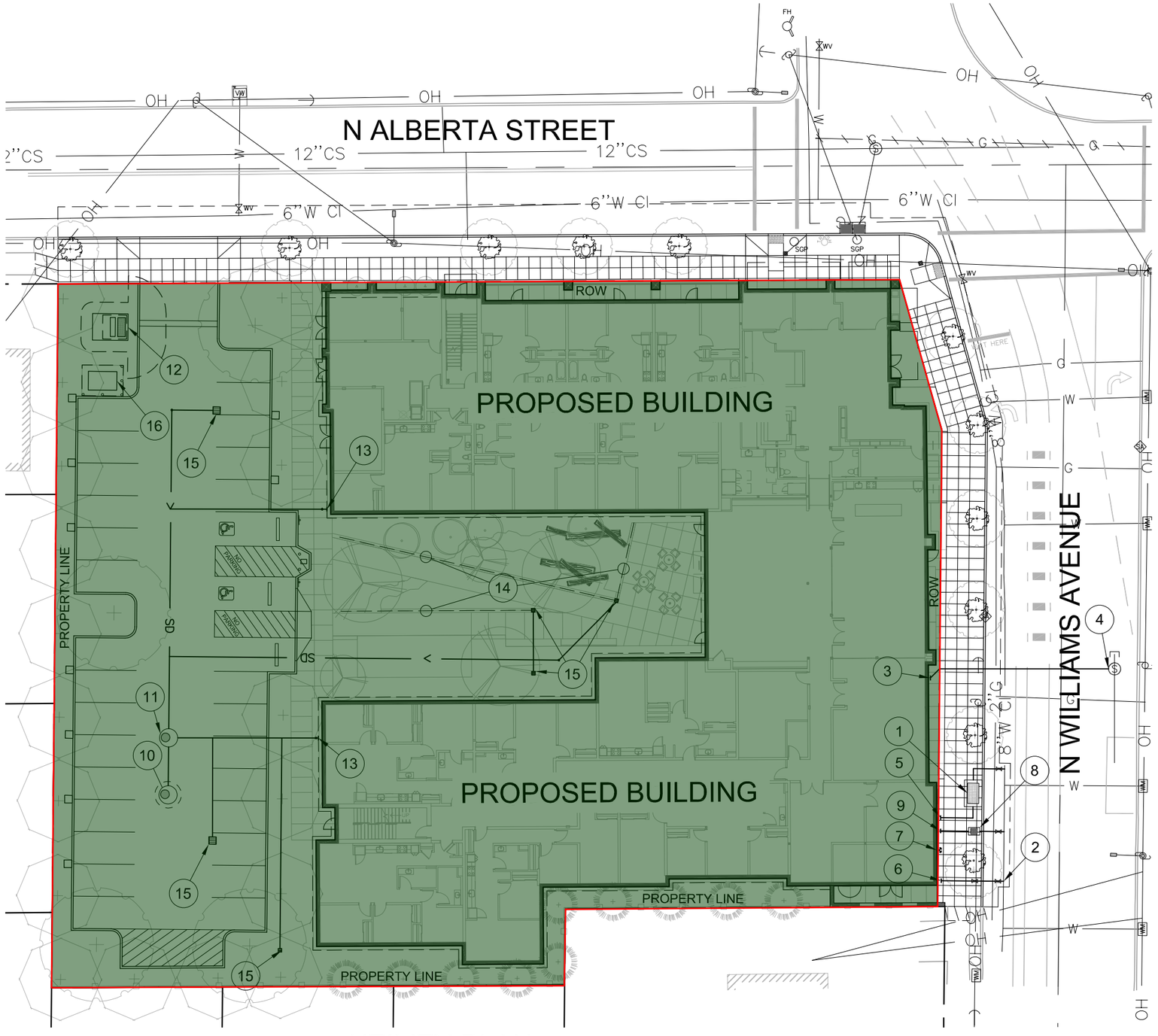

UTILITY PLAN

SCALE: 1"=30'

CATCHMENT AREA = 40,911 SF (CN=98)

CONSTRUCTION NOTES

1. NEW 4" WATER METER, BY PORTLAND WATER BUREAU.
2. NEW X" FIRE LINE, BY PORTLAND WATER BUREAU.
3. NEW SANITARY CONNECTION FROM BUILDING
4. 10" SEWER CONNECTION TO COMBINED SEWER MAINTENANCE HOLE.
5. X" DOMESTIC WATER CONNECTION TO BUILDING. PREMISES-ISOLATION (PI) DCVA TO BE INSTALLED IN BUILDING PER WATER BUREAU REQUIREMENTS.
6. X" FIRE CONNECTION TO BUILDING. PREMISES-ISOLATION (PI) DCDA TO BE INSTALLED IN BUILDING PER WATER BUREAU REQUIREMENTS.
7. FIRE DEPARTMENT CONNECTION MOUNTED TO BUILDING FACE.
8. IRRIGATION METER, BY PORTLAND WATER BUREAU.
9. IRRIGATION CONNECTION TO BUILDING. PREMISES-ISOLATION (PI) DCDA TO BE INSTALLED IN BUILDING PER WATER BUREAU REQUIREMENTS.
10. DRYWELL, 10' PERFORATED SECTION, 40' TOTAL DEPTH
11. SEDIMENT MANHOLE, 10' TOTAL DEPTH.
12. PP&L PAD-MOUNTED TRANSFORMER VAULT.
13. STORM CONNECTION FROM BUILDING FOR ROOF DRAINAGE.
14. FRENCH DRAIN.
15. AREA DRAIN.
16. PAD-MOUNTED BATTERY ENERGY STORAGE SYSTEM.

STORMWATER NARRATIVE

PRIVATE SITE

STORMWATER RUNOFF FROM PROPOSED ROOF AND PAVED SURFACES WILL BE DIRECTED TO THE DRYWELL SYSTEM. THE DRYWELL SYSTEM IS DESIGNED TO FULLY INFILTRATE THE 100-YR STORM EVENT.

PUBLIC STREET IMPROVEMENTS

STORMWATER RUNOFF IN THE PUBLIC RIGHT-OF-WAY FOLLOWS THE EXISTING DRAINAGE PATTERN AND IS COLLECTED VIA NEW CATCH BASINS AND DIRECTED TO THE PUBLIC COMBINED SEWER SYSTEM.

UTILITY CONTACTS

ELECTRICAL
CLEO NARANJO
INTERFACE ENGINEERING, INC
CLEON@INTERFACEENG.COM
(503) 382-2724

BES
ROD KRAUTER
BUREAU OF ENVIRONMENTAL SERVICES
RODNEY.KRAUTER@PORTLANDOREGON.GOV
(503) 823-2073

WATER
KARI ANN SPOON
PORTLAND WATER BUREAU
KARIANN.SPOON@PORTLANDOREGON.GOV
(503) 865-6370

N

0 30 60

1 INCH = 30 FEET

HOLST

STRONG PROPERTY HOUSING

4931-4947 N WILLIAMS AVE
PORTLAND, OR 97217

job no. 23-004

VEGA
CIVIL ENGINEERING LLC
503.662.1901 | WWW.VEGACIVIL.COM

11/13/23

title: UTILITY PLAN

sheet: C1.00

LU 23-103655 DZ
Exhibit A8

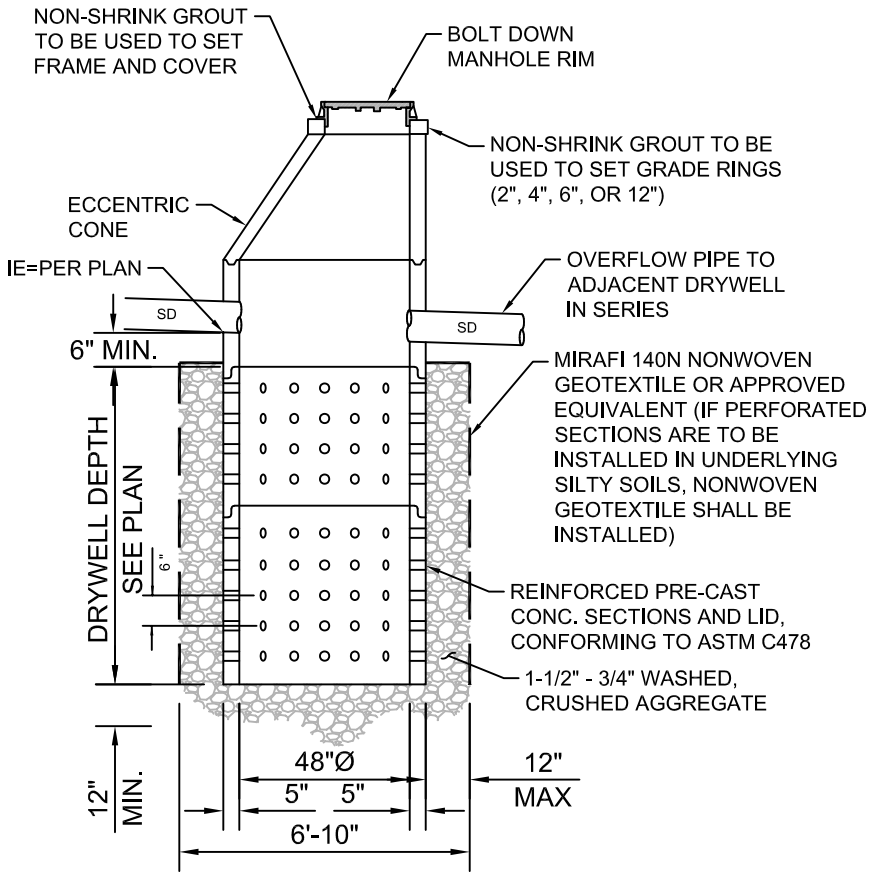

DRYWELL TESTING NOTES

1. DRYWELL(S) SHALL BE TESTED AFTER CONSTRUCTION OF THE DRYWELL STRUCTURE (INCLUDING DRAIN ROCK AND PERIMETER BACKFILL) BUT PRIOR TO THE CONSTRUCTION OF THE TOP SLAB AND FINISH BACKFILL.
2. NOTIFY CIVIL AND GEOTECHNICAL ENGINEERS 7 DAYS PRIOR TO TESTING AND PROVIDE WRITTEN PLAN FOR TESTING INCLUDING WATER SOURCE.

DRYWELL

NTS

Appendix B - Calculations

HydroCAD Report

Summary for Pond 2P: Deep Drywell

Inflow Area = 40,911 sf,100.00% Impervious, Inflow Depth > 4.16" for 100yr event
Inflow = 0.99 cfs @ 7.80 hrs, Volume= 14,197 cf
Outflow = 0.79 cfs @ 7.85 hrs, Volume= 14,167 cf, Atten= 21%, Lag= 2.8 min
Discarded = 0.79 cfs @ 7.85 hrs, Volume= 14,167 cf

Routing by Stor-Ind method, Time Span= 0.00-24.00 hrs, dt= 0.05 hrs
Peak Elev= 139.77' @ 8.02 hrs Surf.Area= 37 sf Storage= 716 cf

Plug-Flow detention time= 10.1 min calculated for 14,138 cf (100% of inflow)
Center-of-Mass det. time= 8.4 min (662.0 - 653.6)

Volume	Invert	Avail.Storage	Storage Description
#1	100.00'	217 cf	**6.83'D x 30.00'H Vertical Cone/Cylinder** 1,099 cf Overall - 377 cf Embedded = 722 cf x 30.0% Voids
#2	100.00'	377 cf	**4.00'D x 30.00'H Vertical Cone/Cylinder**Inside #1
#3	130.00'	126 cf	**4.00'D x 10.00'H Vertical Cone/Cylinder**Impervious
		719 cf	Total Available Storage

Device	Routing	Invert	Outlet Devices
#1	Discarded	100.00'	**50.000 in/hr Exfiltration over Wetted area**

Discarded OutFlow Max=0.79 cfs @ 7.85 hrs HW=132.46' (Free Discharge)
1=Exfiltration (Exfiltration Controls 0.79 cfs)

Pond 2P: Deep Drywell

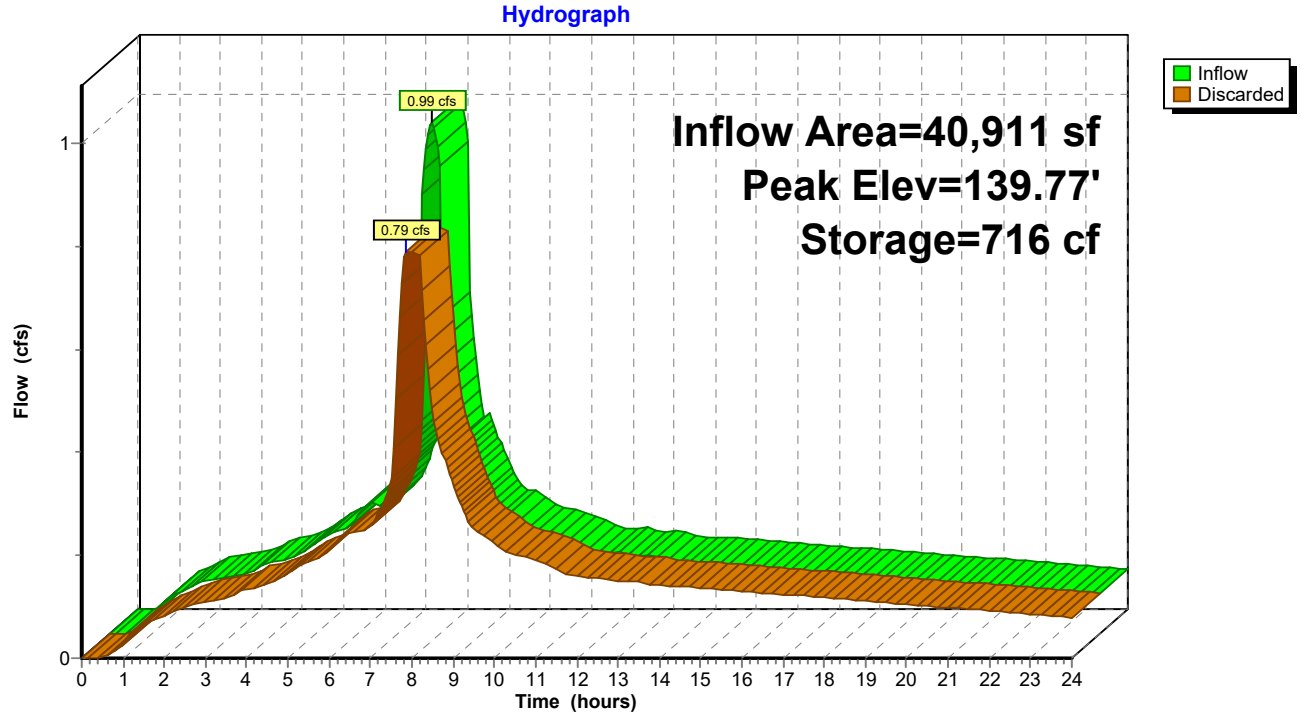

Appendix C – Associated Report

Geotechnical Report

Carlson Geotechnical

A division of Carlson Testing, Inc.
Phone: (503) 601-8250
www.carlsontesting.com

Bend Office	**(541) 330-9155**
Eugene Office	**(541) 345-0289**
Salem Office	**(503) 589-1252**
Tigard Office	**(503) 684-3460**

Report of
Geotechnical Investigation & Infiltration Testing
Strong Property - North Portland
4931 North Williams Avenue
Portland, Oregon

CGT Project Number G2305938

Prepared for

James Lee
Community Development Partners
126 NE Alberta Street, Suite 202
Portland, Oregon, 97211

August 7, 2023

Carlson Geotechnical

A division of Carlson Testing, Inc.
Phone: (503) 601-8250
www.carlsontesting.com

Bend Office	(541) 330-9155
Eugene Office	(541) 345-0289
Salem Office	(503) 589-1252
Tigard Office	(503) 684-3460

August 7, 2023

James Lee
Community Development Partners
126 NE Alberta Street, Suite 202
Portland, Oregon, 97211

Report of
Geotechnical Investigation & Infiltration Testing
Strong Property - North Portland
4931 North Williams Avenue
Portland, Oregon

CGT Project Number G2305938

Dear James Lee:

Carlson Geotechnical (CGT), a division of Carlson Testing, Inc. (CTI), is pleased to submit this report summarizing the results of our geotechnical investigation and infiltration testing for the proposed Strong Property project. The site spans five parcels located at the southwest quadrant of the intersection of North Williams Avenue and North Alberta Street in Portland, Oregon. The parcels consist of Tax Lots 114, 106, 20, and 4931-4947. We performed our work in general accordance with CGT Proposal GP23-137, dated June 9, 2023. Written authorization for our services was received on June 16, 2023.

We appreciate the opportunity to work with you on this project. Please contact us at (503) 601-8250 if you have any questions regarding this report.

Respectfully Submitted,
CARLSON GEOTECHNICAL

Ariana Tenold, G.I.T.
Geotechnical Project Manager
atenold@carlsontesting.com

Brad M. Wilcox, P.E., G.E.
Principal Geotechnical Engineer
bwilcox@carlsontesting.com

Doc ID: G:\GEOTECH\PROJECTS\2023 Projects\G2305938 - Strong Property\G2305938 - GEO\008 - Deliverables\Report\G2305938 Geotechnical Investigation.docx

TABLE OF CONTENTS

1.0 INTRODUCTION 4
1.1 Project Information 4
1.2 Scope of Services 4
2.0 SITE DESCRIPTION 5
2.1 Site Geology 5
2.2 Site Surface Conditions 5
2.3 Subsurface Conditions 6
3.0 SEISMIC CONSIDERATIONS 8
3.1 Seismic Design 8
3.2 Seismic Hazards 8
4.0 CONCLUSIONS 10
4.1 Undocumented Fills 10
4.2 Subgrade Moisture Sensitivity 11
5.0 RECOMMENDATIONS 11
5.1 Site Preparation 11
5.2 Temporary Excavations 12
5.3 Wet Weather Considerations 13
5.4 Structural Fill 14
5.5 Shallow Foundations 16
5.6 Rigid Retaining Walls 18
5.7 Floor Slabs 19
5.8 Pavements 20
5.9 Additional Considerations 21
6.0 RECOMMENDED ADDITIONAL SERVICES 21
6.1 Design Review 21
6.2 Observation of Construction 21
7.0 LIMITATIONS 22

ATTACHMENTS

Site Location ..... Figure 1
Site Plan ..... Figure 2
Site Photographs ..... Figure 3
Retaining Wall Static and Seismic Pressure Distribution ..... Figure 4
Retaining Wall Surcharge Pressure Distribution ..... Figure 5

Subsurface Investigation and Laboratory Testing ..... Appendix A
Results of Infiltration Testing ..... Appendix B

1.0 INTRODUCTION

Carlson Geotechnical (CGT), a division of Carlson Testing, Inc. (CTI), is pleased to submit this report summarizing the results of our geotechnical investigation and infiltration testing for the proposed Strong Property project. The site spans five parcels located at the southwest quadrant of the intersection of North Williams Avenue and North Alberta Street in Portland, Oregon, as shown on the attached Site Location, Figure 1.

1.1 Project Information

CGT developed an understanding of the proposed project based on our correspondence with our client and project documents provided to us on June 2, 2023. Based on our review, we understand the project will include:

- Demolition of the existing residence within one of the tax lots (20 North Alberta Street, Portland).
- Construction of a new apartment building within the east portion of the overall development site. The building will be four stories, wood-framed, and incorporate a slab on grade ground floor. No below-grade levels (basements) are proposed. For the purposes of this report, we have assumed maximum column, continuous wall, and uniform floor slab loads will be on the order of 60 kips, 4 kips per lineal foot (klf), and 200 pounds per square foot (psf), respectively.
- Construction of a paved parking lot and installation of appurtenant underground utilities to serve the new building within the west portion of the site.
- Although no stormwater management plans have been provided, we understand that stormwater collected from new impervious areas of the site will be disposed of, at least in part, via onsite infiltration. Design of infiltration facility(ies) will rest with others. Two infiltration tests were requested as part of this assignment.
- Although no grading plans have been provided, we anticipate permanent grade changes at the relatively level site will be minimal, with maximum cuts and fills on the order of 2 feet in depth.

1.2 Scope of Services

Our scope of work included the following:

- Contact the Oregon Utilities Notification Center to mark the locations of public utilities within a 20-foot radius of our explorations at the site. CGT also subcontracted a private utility locator service to mark the locations of detectable private utilities within the same radius.
- Explore subsurface conditions at the site by advancing six drilled borings to depths of approximately 6½ to 51½ feet below ground surface (bgs). Details of the subsurface investigation are presented in Appendix A.
- Conduct infiltration testing in two of the borings. Results of the infiltration testing are presented in Appendix B.
- Classify the soils encountered in the explorations in general accordance with ASTM D2488 (Visual-Manual Procedure).
- Provide a technical narrative describing surface and subsurface deposits, and local geology of the site, based on the results of our explorations and published geologic mapping.
- Provide recommendations for the Seismic Site Class, mapped maximum considered earthquake spectral response accelerations, and site seismic coefficients.

- Provide a qualitative evaluation of seismic hazards at the site, including earthquake-induced liquefaction, landsliding, and surface rupture due to faulting or lateral spread.
- Provide geotechnical recommendations for site preparation and earthwork.
- Provide geotechnical engineering recommendations for use in design and construction of shallow foundations, floor slabs, and pavements.
- Provide this written report summarizing the results of our geotechnical investigation and recommendations for the project.

2.0 SITE DESCRIPTION

2.1 Site Geology

Based on available geologic mapping of the area, the site is underlain by Pleistocene catastrophic flood deposits[1] originating from glacial outburst floods of Lake Missoula. The flood deposits were produced by the periodic failure of glacial ice dams that impounded Lake Missoula in present day Montana between 18,000 to 15,000 years ago[2]. Floodwaters raged through Idaho, eastern Washington, and through the Columbia River Gorge. Near Rainier, Oregon, the river channel was restricted, causing floodwaters to back up the Willamette Valley as far south as Eugene. Floodwaters in the Portland area were as much as 400 feet deep, leaving only the tops of the tallest hills dry. The flood deposits are typically split into three different facies: the coarse-grained facies, the fine-grained facies, and the channel facies. The site is mapped in the fine-grained facies. The fine-grained Missoula flood deposits typically consist of silt, clay, and fine- to coarse-grained sand. Beds are generally poorly defined and thin (less than 3 feet thick). Composite thickness is typically up to 115 feet; however, thickness in the vicinity of the site is about 90 feet[3].

The flood deposits are underlain by the Miocene-Pliocene Troutdale Formation[4]. The Troutdale Formation consists of layers of poorly lithified sediments, including silt, clay, sand, gravel, cobbles, and boulders deposited by ancestral rivers draining off the western Cascades and reworked by later streams and rivers. These sediments are friable to moderately strong deposits of pebbles and cobble conglomerate, as well as interbeds of sandstone, siltstone, and claystone. The gravel predominantly consists of mafic volcanic cobbles and pebbles, as well as characteristic white to yellow to red, well-rounded, quartzite clasts. Bed thickness ranges from about 60 to 275 feet, with a total formation thickness upwards of 1,100 feet.

2.2 Site Surface Conditions

The overall, approximate 0.8-acre site consisted of five adjacent tax lots. During the time of our field investigation, the site was bordered by residential properties and a church to the south and west, Alberta Street to the north, and Williams Avenue to the east. The relatively level site was occupied by an existing residential structure (to be removed) and a concrete retaining wall (to be removed). The remainder of the site was vegetated with short grasses, some blackberry brambles, and scattered trees. Site layout and surface

---

1 Madin, I.P., 2004. Geologic mapping and database for the Portland area fault studies: Final report, Clackamas, Multnomah, and Washington Counties, Oregon: Oregon Department of Geology and Mineral Industries, Open-File Report O-04-02, scale 1:100,000.

2 Allen, John Eliot, Burns, Marjorie, and Burns, Scott, 2009. Cataclysms on the Columbia, The Great Missoula Floods, Revised Second Edition: Ooligan Press, Portland State University.

3 Madin, Ian P., 1990. Earthquake Hazard Geology of the Portland metropolitan area, Oregon. Oregon Department of Geology and Mineral Industries Open File Report 90-2.

4 Beeson, M.H., 1989, Geologic Map of the Portland Quadrangle, Multnomah and Washington Counties, Oregon, and Clark County, Washington, State of Oregon Department of Geology and Mineral Industries, GMS-75.

conditions at the time of our field investigation are shown on the attached Site Plan (Figure 2) and Site Photographs (Figure 3).

2.3 Subsurface Conditions

2.3.1 Subsurface Investigation & Laboratory Testing

Our subsurface investigation consisted of six drilled borings (B-1 through B-6) completed on July 28, 2023. The approximate exploration locations are shown on the Site Plan, attached as Figure 2. In summary, the borings were advanced to depths ranging from about 6½ to 51½ feet bgs. Details regarding the subsurface investigation, logs of the explorations, and results of laboratory testing are presented in Appendix A. Subsurface conditions encountered during our investigation are summarized below.

2.3.2 Subsurface Materials

Logs of the explorations are presented in Appendix A. The following describes each of the subsurface materials encountered at the site.

2.3.2.1 Undocumented Fill

Undocumented fill was encountered at the surface of boring B-2 through B-6. Undocumented fill refers to materials placed without (available) records of subgrade conditions or evaluation of compaction. The specific types of undocumented fill observed at the site are described in the following paragraphs:

Undocumented Organic Soil Fill (OL Fill)

Undocumented organic soil fill was encountered at the surface of borings B-2 through B-6. This material was typically brown, moist, exhibited low plasticity, contained abundant rootlets, and subangular gravel up to ½-inch in diameter. This fill soil extended to a depth of about ¼ to ½ foot bgs.

Undocumented Poorly Graded Sand Fill (SP Fill)

Underlying the organic soil fill in B-5 was undocumented poorly graded sand fill. This material was typically dark gray, moist, fine- to coarse grained and contained trace fines. An approximate 2-foot void was encountered at 5 feet bgs during our soil sampling within this boring. This fill soil extended to a depth of about 12 feet bgs.

Undocumented Silt Fill (ML Fill)

Underlying the organic soil fill in B-2 and B-3 was undocumented silt fill. This material was typically brown, moist, exhibited low plasticity, and contained a varying amount of sand and gravel fragments up to ½-inch in diameter. This fill soil extended to depths of about 1½ and 5 feet bgs in borings B-2 and B-5, respectively.

Undocumented Lean Clay with Gravel Fill (CL Fill)

Underlying the silt fill in B-3 was undocumented lean clay with gravel fill. This material was typically dark gray, moist, exhibited medium plasticity, contained varying amounts of sand and gravel fragments up to ½-inch in diameter, and exhibited a slight petroleum odor. This fill soil extended to a depth of about 11 feet bgs in that boring.

2.3.2.2 Topsoil

Organic Soil (OL)

Organic soil was encountered at the surface of boring B-1. This material was typically brown, moist, exhibited low plasticity, contained abundant rootlets, and extended to depths of about ½ -foot bgs.

2.3.2.3 Fine-Grained Flood Deposits

Underlying the organic soil in boring B-1, and the fill soils in B-2 through B-6 was native silt with sand to sandy silt (ML) and poorly graded sand to sand with silt (SP, SM). These alluvial soils are consistent with the fine-grained flood deposits mapped in the vicinity of the site and described in Section 2.1. The specific types of fine-grained flood deposits observed at the site are described in the following paragraphs:

Silt with Sand to Sandy Silt (ML)

Underlying the organic soil in boring B-1 and the undocumented fill in B-6 was native silty soil. This soil was typically medium stiff, light brown to brown/gray, moist, exhibited low to medium plasticity, and contained varying amounts of fine- to coarse-grained sand. This soil extended to depths of about 3½ feet bgs in B-1, and extended the full depth explored in B-6, approximately 6½ feet bgs.

Poorly Graded Sand to Silty Sand (SP, SM)

Underlying the undocumented fill in borings B-2 through B-5, and underlying the native silt with sand in boring B-1 was native, sandy soil. This soil was typically medium dense to very dense, brown to dark gray, moist, fine- to coarse-grained and contained varying amounts of rounded gravel up to ½-inch in diameter. The native sandy soil extended to the full depths explored in B-1 through B-5, 6½ to 51½ feet bgs, respectively.

2.3.3 Groundwater

Borings B-1 through B-3, and B-5 were advanced using the mud rotary (wet) drilling method, which precluded direct observation of groundwater during advancement of the borings. Borings B-4 and B-6 were advanced using the hollow-stem auger method and we did not encounter any groundwater within the depths explored on July 28, 2023.

To determine approximate regional groundwater levels in the area, we researched well logs available on the Oregon Water Resources Department (OWRD)[5] website for wells located within Section 22, Township 1 North, Range 1 East, Willamette Meridian. Our review indicated that groundwater levels in the area generally ranged from about 155 to 165 feet bgs. It should be noted groundwater levels vary with local topography. In addition, the groundwater levels reported on the OWRD logs often reflect the purpose of the well, so water well logs may only report deeper, confined groundwater, while geotechnical or environmental borings will often report any groundwater encountered, including shallow, unconfined groundwater. Therefore, the levels reported on the OWRD well logs referenced above are considered generally indicative of local water levels and may not reflect actual groundwater levels at the project site. We anticipate that groundwater levels will fluctuate due to seasonal and annual variations in precipitation, changes in site utilization, or other factors

[5] Oregon Water Resources Department, 2023. Well Log Records, *accessed June 2023*, from OWRD web site: http://apps.wrd.state.or.us/apps/gw/well_log/.

In addition to reviewing well logs, we also reviewed the Portland depth to groundwater mapping[6] which indicated groundwater is present at depths of 145 feet bgs in the vicinity of the site. It should be noted that the levels reported by the referenced map are average values for a given location and incorporate a degree of uncertainty. For this location the uncertainty is described as "moderate."

3.0 SEISMIC CONSIDERATIONS

3.1 Seismic Design

Section 1613.2.2 of the 2022 Oregon Structural Specialty Code (2022 OSSC) requires that the determination of the seismic site class be in accordance with Chapter 20 of the American Society of Civil Engineers Minimum Design Loads for Buildings and Other Structures (ASCE 7-16). We have assigned the site as Site Class D ("Stiff Soil") based on geologic mapping and subsurface conditions encountered during our investigation.

Earthquake ground motion parameters for the site were obtained in accordance with the 2022 OSSC using the Seismic Hazards by Location calculator on the ATC website[7]. The site Latitude 45.558812° North and Longitude 122.667371° West were input as the site location. The following table shows the recommended seismic design parameters for the site.

Table 1 Seismic Ground Motion Values

Parameter		Value
Mapped Acceleration Parameters	Spectral Acceleration, 0.2 second (S_s)	0.870g
	Spectral Acceleration, 1.0 second (S_1)	0.390g
Coefficients (Site Class D)	Site Coefficient, 0.2 second (F_A)	1.152
	Site Coefficient, 1.0 second (F_V)[1]	1.910
Adjusted MCE Spectral Response Parameters	MCE Spectral Acceleration, 0.2 second (S_{MS})	1.002g
	MCE Spectral Acceleration, 1.0 second (S_{M1})	0.745g
Design Spectral Response Accelerations	Design Spectral Acceleration, 0.2 second (S_{DS})	0.668g
	Design Spectral Acceleration, 1.0 second (S_{D1})	0.497g
Seismic Design Category (Risk Category II)		D

[1] Value determined from 2022 OSSC Table 1613.2.3(2).

3.2 Seismic Hazards

3.2.1 Liquefaction

In general, liquefaction occurs when deposits of loose/soft, saturated, cohesionless soils, generally sands and silts, are subjected to strong earthquake shaking. If these deposits cannot drain quickly enough, pore water pressures can increase, approaching the value of the overburden pressure. The shear strength of a cohesionless soil is directly proportional to the effective stress, which is equal to the difference between the overburden pressure and the pore water pressure. When the pore water pressure increases to the value of

[6] Snyder, D.T., 2008, Estimated depth to ground water and configuration of the water table in the Portland, Oregon area: U.S. Geological Survey, Scientific Investigations Report SIR-2008-5059, scale 1:60,000.

[7] Applied Technology Council (ATC), 2023. USGS seismic design parameters determined using "Seismic Hazards by Location," *accessed July 2023*, from the ATC website https://hazards.atcouncil.org/.

the overburden pressure, the shear strength of the soil approaches zero, and the soil can liquefy. The liquefied soils can undergo rapid consolidation or, if unconfined, can flow as a liquid. Structures supported by the liquefied soils can experience rapid, excessive settlement, shearing, or even catastrophic failure.

For fine-grained soils, susceptibility to liquefaction is evaluated based on penetration resistance and plasticity, among other characteristics. Criteria for identifying non-liquefiable, fine-grained soils are constantly evolving. Current practice to identify non-liquefiable, fine-grained soils is based on moisture content and plasticity characteristics of the soils[8,9,10]. The susceptibility of sands, gravels, and sand-gravel mixtures to liquefaction is typically assessed based on penetration resistance, as measured using SPTs, CPTs, or Becker Hammer Penetration tests (BPTs).

Based on the lack of saturated conditions, static groundwater, etc., the soils encountered within our explorations are considered non-liquefiable. Based on review of geologic mapping and our previous experience in the area, we do not anticipate liquefiable conditions are present at depths below those explored as part of this assignment. This judgment is supported by the Oregon Department of Geology and Mineral Industries' Oregon Statewide Geohazards Viewer (HazVu)[11] ,which shows a *low* hazard for liquefaction at the site. In addition, the Oregon Hazard Explorer for Lifelines Program (O-HELP)[12] shows a *very low* hazard for liquefaction for the site or immediate vicinity due to a M9.0 Cascadia Subduction Zone earthquake.

3.2.2 Slope Instability

Due to the relatively level topography at and surrounding the site, the risk of slope instability at the site is considered negligible. The proposed grading includes relatively minimal planned changes in site grades and is not anticipated to significantly increase this risk.

3.2.3 Surface Rupture

3.2.3.1 Faulting

Although the site is situated in a region of the country with known active faults and historic seismic activity, no known faults exist on or immediately adjacent to the site. Therefore, the risk of surface rupture at the site due to faulting is considered low.

3.2.3.2 Lateral Spread

Surface rupture due to lateral spread can occur on sites underlain by liquefiable soils that are located on or immediately adjacent to slopes steeper than about 3 degrees (20H:1V), and/or adjacent to a free face, such as a stream bank or the shore of an open body of water. During lateral spread, the materials overlying the liquefied soils are subject to lateral movement downslope or toward the free face. Based on the relatively

---

8 Seed, R.B. et al., 2003. Recent Advances in Soil Liquefaction Engineering: A Unified and Consistent Framework. Earthquake Engineering Research Center Report No. EERC 2003-06.

9 Bray, Jonathan D., Sancio, Rodolfo B., et al., 2006. Liquefaction Susceptibility of Fine-Grained Soils, Journal of Geotechnical and Geoenvironmental Engineering, Volume 132, Issue 9, September 2006.

10 Idriss, I.M., Boulanger, R.W., 2008. Soil Liquefaction During Earthquakes, Earthquakes Engineering Research Institute Monograph MNO-12.

11 Oregon Department of Geology and Mineral Industries, 2023. Oregon Statewide Geohazards Viewer, *accessed June 2023*, from DOGAMI web site: http://www.oregongeology.org/sub/hazvu/index.htm.

12 Oregon State University College of Engineering, 2023. Oregon Hazard Explorer for Lifelines Program (O-HELP), *accessed June 2023*, from O-HELP web site: http://ohelp.oregonstate.edu/#&ui-state=dialog.

level topography at the site and the non-liquefiable nature of the soils, the risk of damage associated with lateral spread is negligible.

4.0 CONCLUSIONS

Based on the results of our field explorations and analyses, the proposed project may be constructed as described in Section 1.1 of this report, provided the recommendations presented later in this report are incorporated into the design and development. We conclude the primary geotechnical considerations for this site include:

- The presence of relatively deep, undocumented fill materials encountered within borings B-3 and B-5.
- The presence of near-surface, moisture sensitive soils that are susceptible to disturbance during wet weather.

These considerations are described in more detail in the following sections.

4.1 Undocumented Fills

As indicated above and shown on the respective boring logs, we encountered about 11 and 12 feet of undocumented fill materials within borings B-3 and B-5, respectively. The undocumented fill materials encountered within the borings were highly variable in terms of relative consistency/density. To the best of our knowledge, there are no records detailing the original placement and compaction of those fill materials. As part of this assignment, we reviewed a report titled "Phase II Environmental Site Assessment Strong Properties", prepared by Parametrix and dated August 20, 2019. In that report, Parametrix reported encountering construction debris (brick, concrete) during environmental soil sampling during a previous site investigation. In addition, Parametrix reported that the project site was formerly occupied by buildings that contained full basements. We interpret that the relatively deep undocumented fills encountered in borings B-3 and B-5 consist of backfill placed within excavations related to the demolition and backfilling of those former basements, as illustrated on the attached Site Plan, Figure 2. Additional earthwork records could be sought to confirm this assumption is correct, if desired.

Due to the lack of documentation, the variable relative compaction/density of the fill materials, and the potential for excessive, total and differential settlements from proposed loads associated with the planned structures, we do <u>not</u> recommend the existing fill materials be relied upon for subgrade support of shallow foundations, floor slabs, or pavements. Where encountered at design subgrade elevations for those features, we recommend the existing fill materials be over-excavated[13] and replaced with structural fill. Subject to environmental review (by others, where applicable), the existing fill materials may be re-used as structural fill at the site, provided they are moisture-conditioned (as necessary) and compacted in conformance with the recommendations presented later in this report.

Supplemental geotechnical explorations (test pits) are recommended to refine the extent of the inferred basement backfills at this site for use in general earthwork planning and cost estimating purposes. Such

[13] As an alternative to full over-excavation and replacement, the existing fill materials could be improved (densified) in place by pursuing deep ground improvement (e.g. granular piers, deep soil mixing, etc.). Deep ground improvement systems are designed and installed by design-build firms specialized in those techniques. In the event that deep ground improvement is to be considered, the geotechnical engineer should be consulted to provide supplemental recommendations. In addition, the project environmental engineer should be consulted to review the concept of leaving those fill soils in place below buildings and/or pavement areas from the environmental perspective.

supplemental explorations are beyond the scope of this current assignment, but can be performed, upon request, for an additional fee.

4.2 Subgrade Moisture Sensitivity

The near surface silty soils (ML, SM) are susceptible to disturbance during wet weather. Trafficability of these soils may be difficult, and significant damage to the subgrade could occur, if earthwork is undertaken without proper precautions at times when the exposed soils are more than a few percentage points above optimum moisture content. In the event that construction occurs during wet weather, CGT recommends that measures be implemented to protect the fine-grained subgrade in areas of repeated construction traffic and within footing excavations. Geotechnical recommendations for wet weather construction are presented in Section 5.3 of this report.

5.0 RECOMMENDATIONS

The recommendations presented in this report are based on the information provided to us, results of our field investigation and analyses, laboratory data, and professional judgment. CGT has observed only a small portion of the pertinent subsurface conditions. The recommendations are based on the assumptions that the subsurface conditions do not deviate appreciably from those found during the field investigation. CGT should be consulted for further recommendations if the design of the proposed development changes and/or variations or undesirable geotechnical conditions are encountered during site development.

5.1 Site Preparation

5.1.1 Demolition

Demolition of existing buildings and appurtenant structures should include complete removal of all structural elements, including foundations and concrete slabs. Abandoned buried utilities should similarly be removed or grouted full. Concrete or asphalt concrete debris resulting from demolition activities may be re-used as structural fill, provided it is processed in accordance with the recommendations presented in Section 5.4.1 of this report. Alternatively, demolition debris should be hauled off site for disposal.

5.1.2 Stripping

Existing vegetation, topsoil (OL), and rooted fill soils (OL Fill) should be removed from within, and for a minimum 5-foot margin around, proposed building pad, structural fill, and pavement areas. Based on the results of our field explorations, topsoil stripping depths are anticipated to be about ¼ to ½ foot bgs. These materials may be deeper or shallower at locations away from the completed explorations. The geotechnical engineer's representative should provide recommendations for actual stripping depths based on observations during site stripping. Stripped surface vegetation and rooted soils should be transported off-site for disposal, or stockpiled for later use in landscaped areas.

5.1.3 Grubbing

Grubbing of trees should include the removal of the root mass and roots greater than ½ inch in diameter. Grubbed materials should be transported off-site for disposal. Root masses from larger trees may extend greater than 3 feet bgs. Where root masses are removed, the resulting excavation should be properly backfilled with structural fill in conformance with Section 5.4 of this report.

5.1.4 Over Excavation of Existing Deep Fills

Please refer to Figure 2 for an illustration showing the exploration locations and depths of fill encountered. Undocumented fill soils (SP Fill, ML Fill, CL Fill) should be removed from within, and for a minimum 5-foot margin around (where feasible), proposed building pad, structural fill, and pavement areas. Undocumented fills encountered in borings B-3 and B-5 extended to depths of about 11 and 12 feet bgs, respectively. These materials may be deeper or shallower at locations away from the completed explorations. Stripped, inorganic fill materials should be transported off-site for disposal, or may be stockpiled for later use as structural fill as described in Section 5.4.1 of this report.

5.1.5 Existing Utilities & Below-Grade Structures

All existing utilities at the site should be identified prior to excavation. Abandoned utility lines beneath the new building, pavements, and hardscaping features should be completely removed or grouted full. Soft, loose, or otherwise unsuitable soils encountered in utility trench excavations should be removed and replaced with structural fill in conformance with Section 5.4 this report. Buried structures (i.e. footings, foundation walls, retaining walls, slabs-on-grade, tanks, etc.), if encountered during site development, should be completely removed and replaced with structural fill in conformance with Section 5.4 of this report.

5.1.6 Subgrade Preparation – Building Pad & Pavements

After site preparation as recommended above, but prior to placement of structural fill and/or aggregate base, the geotechnical engineer's representative should observe the exposed subgrade soils in order to identify areas of excessive yielding through either proof rolling or probing. Proof rolling of subgrade soils is typically conducted during dry weather using a fully-loaded, 10- to 12-cubic-yard, tandem-axle, tire-mounted, dump truck or equivalent weighted water truck. Areas of limited access or that appear too soft or wet to support proof rolling equipment should be evaluated by probing. During wet weather, subgrade preparation should be performed in general accordance with the recommendations presented in Section 5.3 of this report. If areas of soft soil or excessive yielding are identified, the affected material should be over-excavated to firm, unyielding subgrade, and replaced with imported granular structural fill in conformance with Section 5.4.2 of this report.

5.1.7 Erosion Control

Erosion and sedimentation control measures should be employed in accordance with applicable City, County, and State regulations.

5.2 Temporary Excavations

5.2.1 Overview

Conventional earthmoving equipment in proper working condition should be capable of making necessary excavations for the anticipated site cuts as described earlier in this report. All excavations should be in accordance with applicable OSHA and state regulations. It is the contractor's responsibility to select the excavation methods, to monitor site excavations for safety, and to provide any shoring required to protect personnel and adjacent improvements. A "competent person," as defined by OR-OSHA, should be on-site during construction in accordance with regulations presented by OR-OSHA. CGT's current role on the project does not include review or oversight of excavation safety.

5.2.2 OSHA Soil Type

For use in the planning and construction of temporary excavations up to 15 feet in depth, an OSHA soil type "C" should be used for the existing fill materials and native predominantly sandy soils (ML, SP, SM) encountered in the borings.

5.2.3 Utility Trenches

Temporary trench cuts should stand near vertical to depths of approximately 4 feet in the native, silty and sandy soils (ML, SP, SM) encountered near the surface of the site. If groundwater seepage undermines the stability of the trench, or if sidewall caving is observed during excavation, the sidewalls should be flattened or shored. Depending on the time of year trench excavations occur, trench dewatering may be required in order to maintain dry working conditions. If groundwater is encountered, we recommend placing trench stabilization material at the base of the excavations. Trench stabilization material should be in conformance with Section 5.4.3.

5.2.4 Excavations Near Foundations

Excavations near footings should not extend within a 1 horizontal to 1 vertical (1H:1V) plane projected out and down from the outside, bottom edge of the footings. In the event excavation needs to extend below the referenced plane, temporary shoring of the excavation and/or underpinning of the subject footing may be required. The geotechnical engineer should be consulted to review proposed excavation plans for this design case to provide specific recommendations.

5.3 Wet Weather Considerations

For planning purposes, the wet season should be considered to extend from late September to late June. It is our experience that dry weather working conditions should prevail between early July and mid-September. Notwithstanding the above, soil conditions should be evaluated in the field by the geotechnical engineer's representative at the initial stage of site preparation to determine whether the recommendations within this section should be incorporated into construction.

5.3.1 Overview

Due to their fines content, the on-site silty soils (ML, SM) are susceptible to disturbance during wet weather. Trafficability of these soils may be difficult, and significant damage to subgrade soils could occur, if earthwork is undertaken without proper precautions at times when the exposed soils are more than a few percentage points above optimum moisture content. For wet weather construction, site preparation activities may need to be accomplished using track-mounted equipment, loading removed material onto trucks supported on granular haul roads, or other methods to limit soil disturbance. The geotechnical engineer's representative should evaluate the subgrade during excavation by probing rather than proof rolling. Soils that have been disturbed during site preparation activities, or soft or loose areas identified during probing, should be over-excavated to firm, unyielding subgrade, and replaced with imported granular structural fill in conformance with Section 5.4.2.

5.3.2 Geotextile Separation Fabric

We recommend a geotextile separation fabric be placed to serve as a barrier between the prepared subgrade and granular fill/base rock in areas of repeated or heavy construction traffic. The geotextile fabric

should meet the requirements presented in the current Oregon Department of Transportation (ODOT) Standard Specification for Construction (ODOT SSC), Section 02320.

5.3.3 Granular Working Surfaces (Haul Roads & Staging Areas)

Haul roads subjected to repeated heavy, tire-mounted, construction traffic (e.g. dump trucks, concrete trucks, etc.) will require a minimum of 18 inches of imported granular material. For light staging areas, 12 inches of imported granular material is typically sufficient. Additional granular material or geo-grid reinforcement may be recommended based on site conditions and/or loading at the time of construction. The imported granular material should be in conformance with Section 5.4.2 and have less than 5 percent material passing the U.S. Standard No. 200 Sieve. The prepared subgrade should be covered with geotextile fabric (Section 5.3.2) prior to placement of the imported granular material. The imported granular material should be placed in a single lift (up to 24 inches deep) and compacted using a smooth-drum, non-vibratory roller until well-keyed.

5.3.4 Footing Subgrade Protection

A minimum of 3 inches of imported granular material is recommended to protect fine-grained (silty), footing subgrades from foot traffic during inclement weather. The imported granular material should be in conformance with Section 5.4.2. The maximum particle size should be limited to 1 inch. The imported granular material should be placed in one lift over the prepared, undisturbed subgrade, and compacted using non-vibratory equipment until well keyed.

Surface water should not be allowed to collect in footing excavations. The excavations should be draped and/or provided with sumps to preclude water accumulation during inclement weather.

5.4 Structural Fill

The geotechnical engineer should be provided the opportunity to review all materials considered for use as structural fill (prior to placement). Samples of the proposed fill materials should be submitted to the geotechnical engineer a minimum of 5 business days prior their use on site[14]. The geotechnical engineer's representative should be contacted to evaluate compaction of structural fill as the material is being placed. Evaluation of compaction may take the form of in-place density tests and/or proof roll tests with suitable equipment. Structural fill should be evaluated at intervals not exceeding every 2 vertical feet as the fill is being placed.

5.4.1 On-Site Soils – General Use

In addition to the project geotechnical engineer, re-use of on-site soils to serve as structural fill should be reviewed by the project environmental consultant. The recommendations that follow assume the soils are suitable for re-use from the environmental perspective.

5.4.1.1 Fine-Grained (Silty, Clayey) Soils (ML Fill, CL Fill, ML, SM)

Re-use of these soils as structural fill may be difficult because these soils are sensitive to small changes in moisture content and are difficult, if not impossible, to adequately compact during wet weather. We anticipate the moisture content of these soils will be higher than the optimum moisture content for satisfactory compaction. Therefore, moisture conditioning (drying) should be expected in order to achieve adequate compaction. If used as structural fill, these soils should be free of organic matter, debris, and particles larger

[14] Laboratory testing for moisture density relationship (Proctor) is required. Tests for gradation may be required.

than 4 inches. When used as structural fill, these soils should be placed in lifts with a maximum pre-compaction thickness of about 8 inches at moisture contents within –1 and +3 percent of optimum, and compacted to not less than 92 percent of the material's maximum dry density, as determined in general accordance with ASTM D1557 (Modified Proctor).

5.4.1.2 Poorly Graded Sandy Soils (SP, SP Fill)

Re-use of the on-site, relatively clean, sandy soils as structural fill is feasible, provided the materials are kept clean of organics, debris, and particles larger than 4 inches in diameter. If reused as structural fill, these materials should be prepared in general accordance with Section 5.4.2.

If the on-site materials cannot be properly moisture-conditioned and/or processed, we recommend using imported granular material for structural fill.

5.4.2 Imported Granular Structural Fill – General Use

Imported granular structural fill should consist of angular pit or quarry run rock, crushed rock, or crushed gravel that is fairly well graded between coarse and fine particle sizes. The granular fill should contain no organic matter, debris, or particles larger than 4 inches, and have less than 5 percent material passing the U.S. Standard No. 200 Sieve. For fine-grading purposes, the maximum particle size should be limited to 1½ inches. The percentage of fines can be increased to 12 percent of the material passing the U.S. Standard No. 200 Sieve if placed during dry weather, and provided the fill material is moisture-conditioned, as necessary, for proper compaction. Imported granular fill material should be placed in lifts with a maximum thickness of about 12 inches, and compacted to not less than 95 percent of the material's maximum dry density, as determined in general accordance with ASTM D1557 (Modified Proctor). Proper moisture conditioning and the use of vibratory equipment will facilitate compaction of these materials.

Granular fill materials with high percentages of particle sizes in excess of 1½ inches are considered non-moisture-density testable materials. As an alternative to conventional density testing, compaction of these materials should be evaluated by proof roll test observation (deflection tests), where accepted by the geotechnical engineer.

5.4.3 Trench Base Stabilization Material

If groundwater is present at the base of utility excavations, trench base stabilization material should be placed. Trench base stabilization material should consist of a minimum of 1 foot of well-graded granular material with a maximum particle size of 4 inches and less than 5 percent material passing the U.S. Standard No. 4 Sieve. The material should be free of organic matter and other deleterious material, placed in one lift, and compacted until well-keyed.

5.4.4 Trench Backfill Material

Trench backfill for the utility pipe base and pipe zone should consist of granular material as recommended by the utility pipe manufacturer. Trench backfill above the pipe zone should consist of well-graded granular material containing no organic matter or debris, have a maximum particle size of ¾ inch, and have less than 8 percent material passing the U.S. Standard No. 200 Sieve. As a guideline, trench backfill should be placed in maximum 12-inch-thick lifts. The earthwork contractor may elect to use alternative lift thicknesses based on their experience with specific equipment and fill material conditions during construction in order to achieve

the required compaction. The following table presents recommended relative compaction percentages for utility trench backfill.

Table 2 Utility Trench Backfill Compaction Recommendations

Backfill Zone	Recommended Minimum Relative Compaction	
	Structural Areas[1,2]	Landscaping Areas
Pipe Base and Within Pipe Zone	90% ASTM D1557 or pipe manufacturer's recommendation	85% ASTM D1557 or pipe manufacturer's recommendation
Above Pipe Zone	92% ASTM D1557	88% ASTM D1557
Within 3 Feet of Design Subgrade	95% ASTM D1557	90% ASTM D1557

1 Includes proposed building, pavement areas, structural fill areas, exterior hardscaping, etc.
2 Or as specified by the local jurisdiction where located in the public right of way.

5.4.5 Controlled Low-Strength Material (CLSM)

CLSM is a self-compacting, cementitious material that is typically considered when backfilling localized areas. CLSM is sometimes referred to as "controlled density fill" or CDF. Due to its flowable characteristics, CLSM typically can be placed in restricted-access excavations where placing and compacting fill is difficult. If chosen for use at this site, we recommend the CLSM be in conformance with Section 00442 of the most recent, ODOT SSC. The geotechnical engineer's representative should observe placement of the CLSM and obtain samples for compression testing in accordance with ASTM D4832. As a guideline, for each day's placement, two compressive strength specimens from the same CLSM sample should be tested. The results of the two individual compressive strength tests should be averaged to obtain the reported 28-day compressive strength. If CLSM is considered for use on this site, please contact the geotechnical engineer for site-specific and application-specific recommendations.

5.5 Shallow Foundations

The recommendations that follow assume that the existing relatively deep undocumented fill soils, as described earlier in this report, will be over-excavated and replaced with structural fill in conformance with Section 4.0 of this report. In the event that deep ground improvement (e.g. granular piers, deep soil mixing, etc.) will be used to remedy those fill materials and shallow foundations will derive subgrade support from improved ground, the geotechnical engineer should be consulted to provide supplemental recommendations.

5.5.1 Subgrade Preparation

Satisfactory subgrade support for shallow foundations can be obtained from the native, medium stiff to better silty soils (ML), the native, medium dense to better poorly graded sandy soils (SM, SP), or new structural fill that is properly placed and compacted on these materials during construction. The geotechnical engineer's representative should be contacted to observe subgrade conditions prior to placement of forms, reinforcement steel, or granular backfill (if required). If soft, loose, or otherwise unsuitable soils are encountered, they should be over-excavated as recommended by the geotechnical representative at the time of construction. The resulting over-excavation should be brought back to grade with imported granular structural fill in conformance with Section 5.4.2. The maximum particle size of over-excavation backfill should be limited to 1½ inches. All granular pads for footings should be constructed a minimum of 6 inches wider on each side of the footing for every vertical foot of over-excavation.

5.5.2 Minimum Footing Width & Embedment

Minimum footing widths should be in conformance with the current OSSC. As a guideline, CGT recommends individual spread footings have a minimum width of 24 inches. For three plus story structures, we recommend continuous wall footings have a minimum width of 18 inches. All footings should be founded at least 18 inches below the lowest, permanent adjacent grade to develop lateral capacity and for frost protection.

5.5.3 Bearing Pressure & Settlement

Footings founded as recommended above should be proportioned for a maximum allowable soil bearing pressure of 2,500 pounds per square foot (psf). This bearing pressure is a net bearing pressure, applies to the total of dead and long-term live loads, and may be increased by one-third when considering seismic or wind loads. For foundations founded as recommended above, total settlement of foundations is anticipated to be less than 1 inch. Differential settlements between adjacent columns and/or bearing walls should not exceed ½ inch. If an increased allowable soil bearing pressure is desired, the geotechnical engineer should be consulted.

5.5.4 Lateral Capacity

A maximum passive (equivalent fluid) earth pressure of 150 pounds per cubic foot (pcf) is recommended for design of footings cast neat into excavations in suitable native soil or confined by granular structural fill that is properly placed and compacted during construction. The recommended earth pressure was computed using a factor of safety of 1½, which is appropriate due to the amount of movement required to develop full passive resistance. In order to develop the above capacity, the following should be understood:

1. Concrete must be poured neat in excavations or the foundations must be backfilled with imported granular structural fill,
2. The adjacent grade must be level,
3. The static ground water level must remain below the base of the footings throughout the year.
4. Adjacent floor slabs, pavements, or the upper 12-inch-depth of adjacent, unpaved areas should not be considered when calculating passive resistance.

An ultimate coefficient of friction equal to 0.35 may be used when calculating resistance to sliding for footings founded on the native soils described above. An ultimate coefficient of friction equal to 0.45 may be used when calculating resistance to sliding for footings founded on a minimum of 6 inches of imported granular structural fill (crushed rock) that is properly placed and compacted during construction.

5.5.5 Subsurface Drainage

Recognizing the presence of near-surface fine-grained (silty) soils encountered at this site, we recommend placing foundation drains at the exterior, base elevations of perimeter continuous wall footings. Foundation drains should consist of a minimum 4-inch diameter, perforated, PVC drainpipe wrapped with a non-woven geotextile filter fabric. The drains should be backfilled with a minimum of 2 cubic feet of open graded drain rock per lineal foot of pipe. The drain rock should also be encased in a geotextile fabric in order to provide separation from the surrounding fine-grained soils. Foundation drains should be positively sloped and should outlet to a suitable discharge point. The geotechnical engineer's representative should observe the drains prior to backfilling. Roof drains should not be tied into foundation drains.

5.6 Rigid Retaining Walls

5.6.1 Footings

Retaining wall footings should be designed and constructed in conformance with the recommendations presented in Section 5.5, as applicable.

5.6.2 Wall Drains

We recommend placing retaining wall drains at the base elevation of the heel of retaining wall footings. Retaining wall drains should consist of a minimum 4-inch-diameter, perforated, HDPE (High Density Polyethylene) drainpipe wrapped with a non-woven geotextile filter fabric. The drains should be backfilled with a minimum of 2 cubic feet of open graded drain rock per lineal foot of pipe. The drain rock should be encased in a geotextile fabric in order to provide separation from the surrounding soils. Retaining wall drains should be positively sloped and should outlet to a suitable discharge point. The geotechnical engineer's representative should be contacted to observe the drains prior to backfilling. Roof or area drains should not be tied into retaining wall drains.

5.6.3 Wall Backfill

Retaining walls should be backfilled with imported granular structural fill in conformance with Section 5.4.2 and contain less than 5 percent passing the U.S. Standard No. 200 Sieve. The backfill should be compacted to a minimum of 90 percent of the material's maximum dry density as determined in general accordance with ASTM D1557 (Modified Proctor). When placing fill behind walls, care must be taken to minimize undue lateral loads on the walls. Heavy compaction equipment should be kept at least "H" feet from the back of the walls, where "H" is the height of the wall. Light mechanical or hand tamping equipment should be used for compaction of backfill materials within "H" feet of the back of the walls.

5.6.4 Design Parameters & Limitations

For rigid retaining walls founded, backfilled, and drained as recommended above, the following table presents parameters recommended for design.

Table 3 Design Parameters for Rigid Retaining Walls

Retaining Wall Condition	Modeled Backfill Condition	Static Equivalent Fluid Pressure (S_A)[1]	Seismic Equivalent Fluid Pressure (S_{AE})[1,2]	Surcharge from Uniform Load, q, Acting on Backfill Behind Retaining Wall
Not Restrained from Rotation	Level (i=0)	28 pcf	39 pcf	0.22*q
Restrained from Rotation	Level (i=0)	50 pcf	53 pcf	0.38*q

[1] Refer to the attached Figure 4 for a graphical representation of static and seismic loading conditions. Seismic resultant force acts at 0.6H above the base of the wall.

[2] Seismic (dynamic) lateral loads were computed using the Mononobe-Okabe Equation as presented in the 1997 Federal Highway Administration (FHWA) design manual. Static and seismic equivalent fluid pressures are not additive.

The above design recommendations are based on the assumptions that:

- The walls consist of concrete cantilevered retaining walls (β = 0 and δ = 24 degrees, see Figure 4).
- The walls are 10 feet or less in height.
- The backfill is drained and consists of imported granular structural fill (ϕ = 38 degrees).
- No point, line, or strip load surcharges are imposed behind the walls.
- The grade behind the wall is level, or sloping down and away from the wall, for a distance of 10 feet or more from the wall.
- The grade in front of the walls is level or ascending for a distance of at least 5 feet from the wall.

Re-evaluation of our recommendations will be required if the retaining wall design criteria for the project vary from these assumptions.

5.6.5 Surcharge Loads

Where present, surcharges from adjacent site features (i.e. buildings, slabs, pavements, etc.) should be evaluated in design of retaining walls at the site. Methods for calculating lateral pressures on rigid retaining walls from strip, line, and vertical point loads are presented on the attached Figure 5.

5.7 Floor Slabs

5.7.1 Subgrade Preparation

Satisfactory subgrade support for slabs constructed on grade, supporting up to 200 psf area loading, can be obtained from the native, medium stiff to better silty soils (ML), the native, medium dense to better sandy soils (SP, SM), or new structural fill that is properly placed and compacted on these materials during construction. The geotechnical engineer's representative should observe floor slab subgrade soils to evaluate surface consistencies. If soft, loose, or otherwise unsuitable soils are encountered, they should be over-excavated as recommended by the CGT geotechnical representative at the time of construction. The resulting over-excavation should be brought back to grade with imported granular structural fill as described in Section 5.4.2.

5.7.1 Crushed Rock Base

Concrete floor slabs should be supported on a minimum 6-inch-thick layer of crushed rock (base rock).

5.7.1.1 Conventional Base Rock

Floor slab base rock should consist of well-graded granular material (crushed rock) containing no organic matter or debris, have a maximum particle size of ¾ inch, and have less than 5 percent material passing the U.S. Standard No. 200 Sieve. Floor slab base rock should be placed in one lift and compacted to not less than 95 percent of the material's maximum dry density as determined in general accordance with ASTM D1557 (Modified Proctor). We recommend "choking" the surface of the base rock with sand just prior to concrete placement. Choking means the voids between the largest aggregate particles are filled with sand, but does not provide a layer of sand above the base rock. Choking the base rock surface reduces the lateral restraint on the bottom of the concrete during curing. Choking the base rock also reduces punctures in vapor retarding membranes due to foot traffic where such membranes are used.

5.7.1.2 Gas Permeable Base Rock

Floor slab base rock in areas where radon gas mitigation is desired should consist of open-graded crushed rock containing no organic matter or debris, with all material passing through a 2-inch sieve and retained on the ¼-inch sieve, in accordance with Section 1812.2.1, Bullet 1, of the 2022 OSSC.

CGT recommends that a minimum 10-mil polyethylene sheeting or equivalent material with equal or greater tensile strength, resistance to puncture, resistance to deterioration, and resistance to water-vapor transmission be placed on top of the gas-permeable base rock to act as a soil-gas-retarder. Placement and installation of this sheeting should be in conformance with that indicated in Section 1812.2.2 of the 2022 OSSC.

The geotechnical engineer or their representative should be contacted to observe gas-permeable base rock conditions prior to placement of the soil-gas-retarder.

5.7.2 Design Considerations

For floor slabs constructed with a 6-inch thick base rock layer as recommended, an effective modulus of subgrade reaction of 150 pounds per cubic inch (pci) is recommended for the design of the floor slab. A higher effective modulus of subgrade reaction can be obtained by increasing the base rock thickness. Please contact the geotechnical engineer for additional recommendations if a higher modulus is desired. Floor slabs constructed as recommended will likely settle less than ½ inch. For general floor slab construction, slabs should be jointed around columns and walls to permit slabs and foundations to settle differentially.

5.7.3 Subgrade Moisture Considerations

Liquid moisture and moisture vapor should be expected at the subgrade surface. The recommended crushed rock base is anticipated to provide protection against liquid moisture. Where moisture vapor emission through the slab must be minimized, e.g. impervious floor coverings, storage of moisture sensitive materials directly on the slab surface, etc., a vapor retarding membrane or vapor barrier below the slab should be considered. Factors such as cost, special considerations for construction, floor coverings, and end use suggest that the decision regarding a vapor retarding membrane or vapor barrier be made by the architect and owner.

If a vapor retarder or vapor barrier is placed below the slab, its location should be based on current American Concrete Institute (ACI) guidelines, ACI 302 Guide for Concrete Floor and Slab Construction. In some cases, this indicates placement of concrete directly on the vapor retarder or barrier. Please note that the placement of concrete directly on impervious membranes increases the risk of plastic shrinkage cracking and slab curling in the concrete. Construction practices to reduce or eliminate such risk, as described in ACI 302, should be employed during concrete placement.

5.8 Pavements

5.8.1 Subgrade Preparation

Pavement subgrade preparation should be performed in general accordance with the recommendations presented in Section 5.1.6 above. Subgrade surfaces should be crowned (or sloped) for proper drainage in accordance with specifications provided by the project civil engineer.

5.8.2 Design Pavement Sections

Recommendations for design pavement sections were not included as part of this assignment, but can be provided, upon request, for an additional fee.

5.9 Additional Considerations

5.9.1 Drainage

Subsurface drains should be connected to the nearest storm drain, on-site infiltration system (to be designed by others) or other suitable discharge point. Paved surfaces and grading near or adjacent to the building should be sloped to drain away from the building. Surface water from paved surfaces and open spaces should be collected and routed to a suitable discharge point. Surface water should not be directed into foundation or retaining wall drains.

5.9.2 Expansive Potential

The near surface native soils consist of low to moderate plasticity silt and non-plastic sandy soils. Based on our experience with similar soils in the vicinity of the site, these soils are not considered to be susceptible to appreciable movements from changes in moisture content. Accordingly, no special considerations are required to mitigate expansive potential of the near surface soils at the site.

6.0 RECOMMENDED ADDITIONAL SERVICES

6.1 Design Review

Geotechnical design review is of paramount importance. We recommend the geotechnical design review take place prior to releasing bid packets to contractors.

6.2 Observation of Construction

Satisfactory earthwork, foundation, floor slab, and pavement performance depends to a large degree on the quality of construction. Sufficient observation of the contractor's activities is a key part of determining that the work is completed in accordance with the construction drawings and specifications. Subsurface conditions observed during construction should be compared with those encountered during subsurface explorations, and recognition of changed conditions often requires experience. We recommend that qualified personnel visit the site with sufficient frequency to detect whether subsurface conditions change significantly from those observed to date and anticipated in this report. We recommend geotechnical engineer's representative attend a pre-construction meeting coordinated by the contractor and/or developer. The project geotechnical engineer's representative should provide observations and/or testing of at least the following earthwork elements during construction:

- Site Stripping and Demolition
- Subgrade Preparation for Shallow Foundations, Retaining Walls, Structural Fills, Floor Slabs, and Pavements
- Compaction of Structural Fill, Retaining Wall Backfill, and Utility Trench Backfill
- Compaction of Base Rock for Floor Slabs and Pavements
- Compaction of Asphalt Concrete for Pavements

It is imperative that the owner and/or contractor request earthwork observations and testing at a frequency sufficient to allow the geotechnical engineer to provide a final letter of compliance for the earthwork activities.

7.0 LIMITATIONS

We have prepared this report for use by the owner/developer and other members of the design and construction team for the proposed development. The opinions and recommendations contained within this report are forwarded to assist in the planning and design process and are not intended to be, nor should they be construed as, a warranty of subsurface conditions.

We have made observations based on our explorations that indicate the soil conditions at only those specific locations and only to the depths penetrated. These observations do not necessarily reflect soil types, strata thickness, or water level variations that may exist between or away from our explorations. If subsurface conditions vary from those encountered in our site explorations, CGT should be alerted to the change in conditions so that we may provide additional geotechnical recommendations, if necessary. Observation by experienced geotechnical personnel should be considered an integral part of the construction process.

The owner/developer is responsible for ensuring that the project designers and contractors implement our recommendations. When the design has been finalized, prior to releasing bid packets to contractors, we recommend that the design drawings and specifications be reviewed by our firm to see that our recommendations have been interpreted and implemented as intended. If design changes are made, we request that we be retained to review our conclusions and recommendations and to provide a written modification or verification. Design review and construction phase testing and observation services are beyond the scope of our current assignment, but will be provided for an additional fee.

The scope of our services does not include services related to construction safety precautions, and our recommendations are not intended to direct the contractor's methods, techniques, sequences, or procedures, except as specifically described in our report for consideration in design.

Geotechnical engineering and the geologic sciences are characterized by a degree of uncertainty. Professional judgments presented in this report are based on our understanding of the proposed construction, familiarity with similar projects in the area, and on general experience. Within the limitations of scope, schedule, and budget, our services have been executed in accordance with the generally accepted practices in this area at the time this report was prepared; no warranty, expressed or implied, is made. This report is subject to review and should not be relied upon after a period of three years.

STRONG PROPERTY - PORTLAND, OREGON
Project Number G2305938

FIGURE 1
Site Location

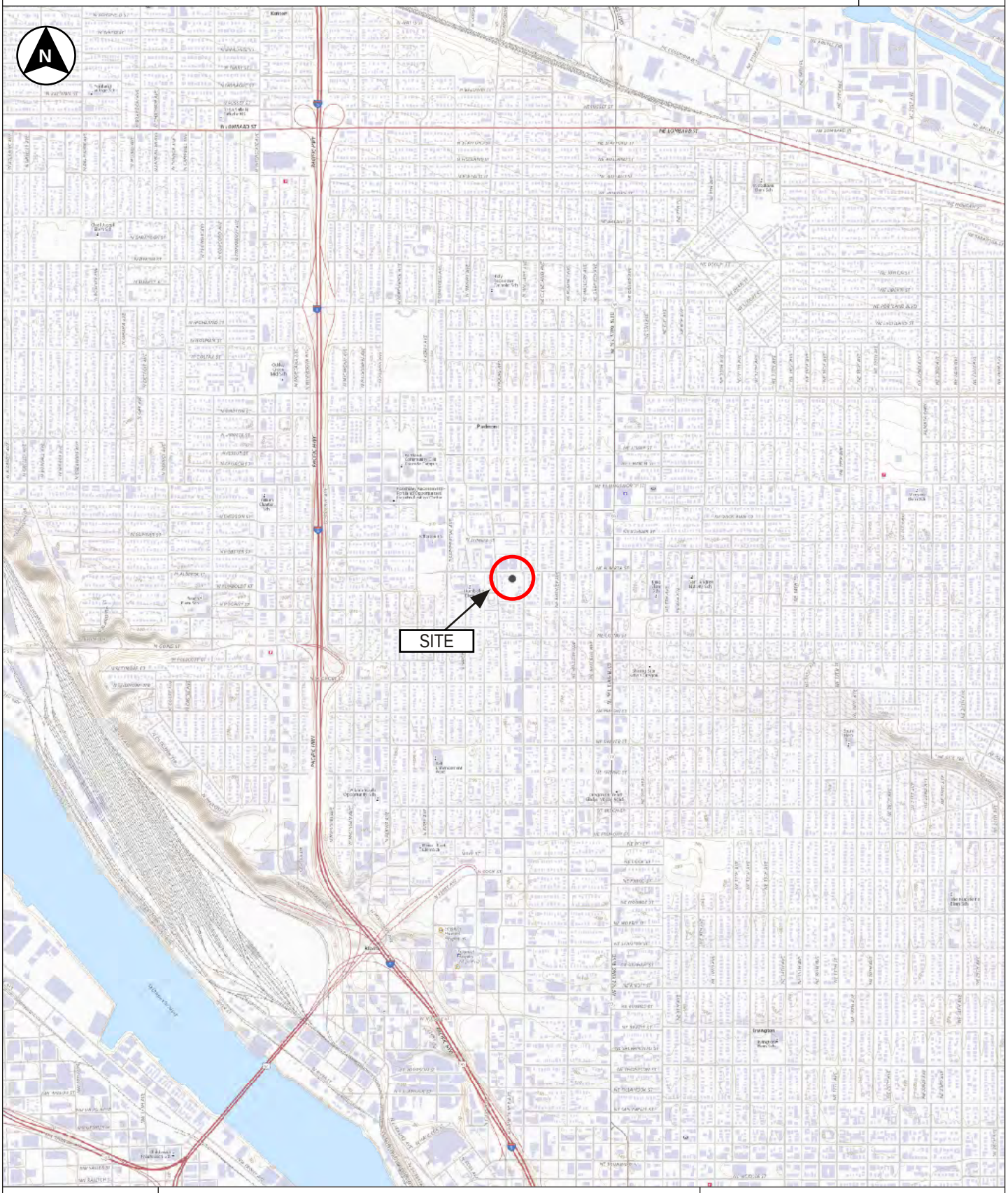

CARLSON CGT GEOTECHNICAL
503-601-8250
Drafted by: AET

USGS Topographic base map created with The National Map, 2023, at https://apps.nationalmap.gov/viewer/

Township 1 North, Range 1 East, Section 22, Willamette Meridian

Latitude: 45.558812° North
Longitude: 122.667371° West

1 Inch = 2,000 feet

0 2000 4000

LU 23-103655 DZ
Exhibit A8

STRONG PROPERTY - PORTLAND, OREGON
Project Number G2305938

Figure 2
Site Plan

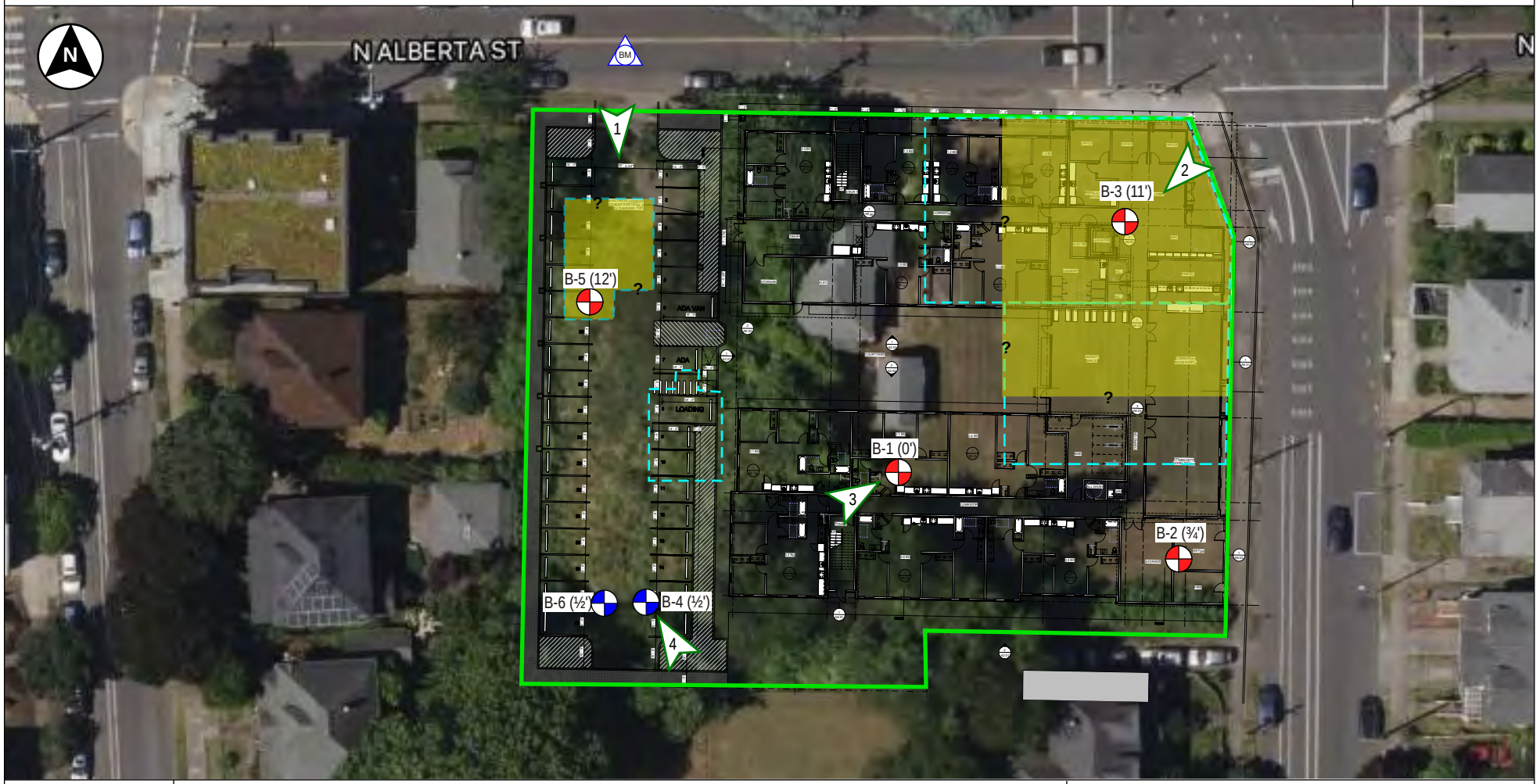

LEGEND

B-1 (') Hollow-stem auger boring. Depth of fill indicated in ().

B-6 (') Infiltration test boring. Depth of fill indicated in ().

BM Elevation benchmark - Assumed 100-foot elevation at the surface of N Alberta Street.

Property boundary

Approximate location of previous buildings with basements (see text for additional discussion)

Area of site inferred to be underlain by 10+ feet of undocumented fill (see text for additional discussion.)

1 Inch = 50 Feet

0 50 100

NOTES: 2022 aerial photograph from Satellites.Pro, https://satellites.pro/Portland_map.Oregon_region.USA. Building footprint from site plan produced by Parametrix, provided by client. Locations noted are approximate.

CARLSON CGT GEOTECHNICAL
503-601-8250
Drafted by: AET

LU 23-103655 DZ
Exhibit A8

Photograph 1

Photograph 2

Photograph 3

Photograph 4

CARLSON CGT GEOTECHNICAL
503-601-8250
Drafted by: AET

See Figure 2 for approximate photograph locations and directions. Photographs were taken at the time of our fieldwork.

ACTIVE LATERAL PRESSURE DISTRIBUTION

STATIC LOADING CONDITIONS

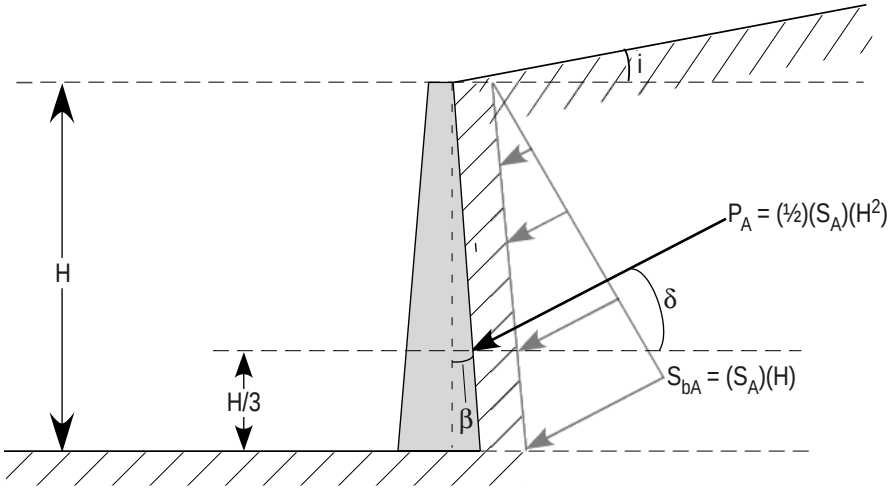

SEISMIC LOADING CONDITIONS

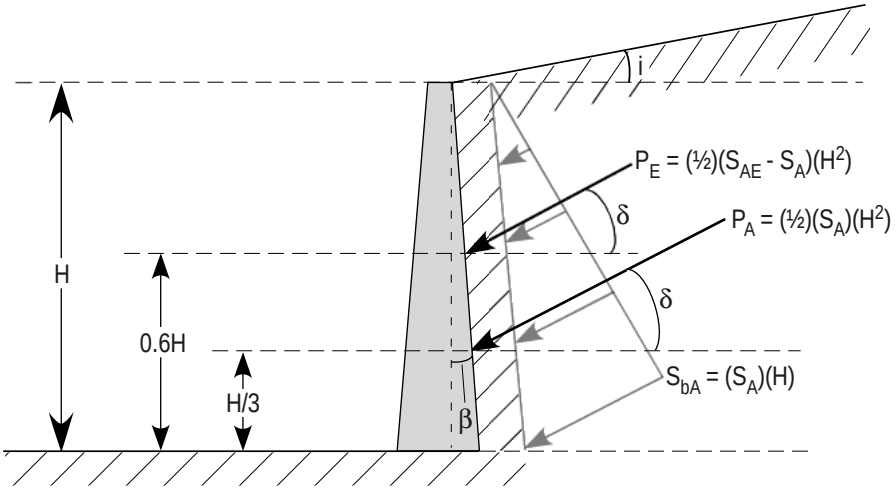

LEGEND

S_A = Active lateral equivalent fluid pressure (lb/ft^3)*

S_{bA} = Active lateral earth pressure (static) at the bottom of wall (lb/ft^3)

S_{AE} = Active total (static + seismic) equivalent fluid pressure (lb/ft^3)*

i = Slope of backfill, relative to horizontal (degrees)**

β = Slope of back of wall, relative to vertical (degrees)**

P_A = Static active thrust force acting at H/3 from bottom of retaining wall (lb/ft)

P_E = Dynamic active thrust force acting at 0.6H from bottom of retaining wall (lb/ft)

δ = Angle from normal of back of wall (degrees). Based on friction developing between wall and backfill**

*Refer to report text for calculated values **Refer to report text for modeled/assumed values

CARLSON CGT GEOTECHNICAL 503-601-8250

Notes

1. Uniform pressure distribution of seismic loading is based on empirical evaluations [Sherif et al, 1982 and Whitman, 1990].
2. Placement of seismic resultant force at 0.6H is based on wall behavior and model test results [Whitman, 1990].

STRIP LOAD PARALLEL TO WALL[1]

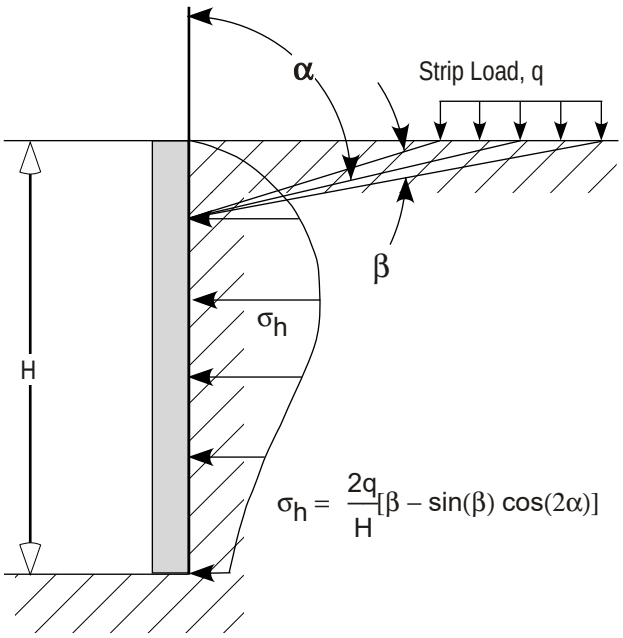

$$\sigma_h = \frac{2q}{H}[\beta - \sin(\beta)\cos(2\alpha)]$$

LINE LOAD PARALLEL TO WALL[2]

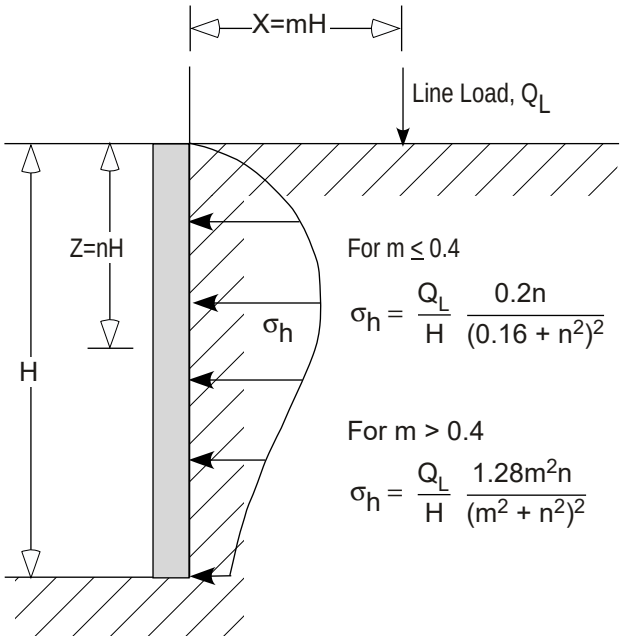

For $m \leq 0.4$

$$\sigma_h = \frac{Q_L}{H}\frac{0.2n}{(0.16 + n^2)^2}$$

For $m > 0.4$

$$\sigma_h = \frac{Q_L}{H}\frac{1.28m^2n}{(m^2 + n^2)^2}$$

VERTICAL POINT LOAD[2]

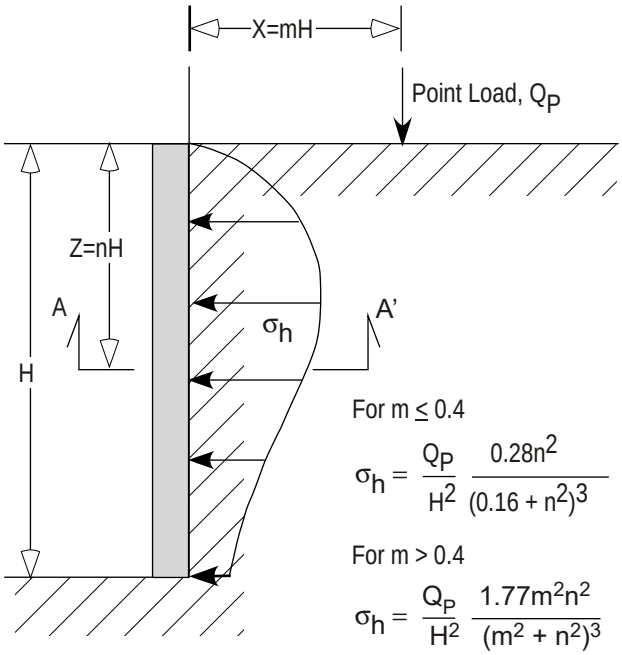

For $m \leq 0.4$

$$\sigma_h = \frac{Q_P}{H^2}\frac{0.28n^2}{(0.16 + n^2)^3}$$

For $m > 0.4$

$$\sigma_h = \frac{Q_P}{H^2}\frac{1.77m^2n^2}{(m^2 + n^2)^3}$$

Section A - A'

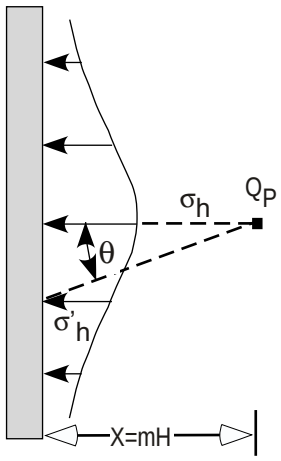

$$\sigma'_h = \sigma_h \cos^2(1.1\,\theta)$$

Notes: 1. Das, Principles of Geotechnical Engineering, 1990 Edition.
2. NAVFAC Design Manual 7.06.

Refer to the referenced design manuals for additional guidance. Contact CGT if there are any questions with modeling surcharge loads.

Carlson Geotechnical

A Division of Carlson Testing, Inc.
Phone: (503) 601-8250
www.carlsontesting.com

Bend Office	**(541) 330-9155**
Eugene Office	**(541) 345-0289**
Salem Office	**(503) 589-1252**
Tigard Office	**(503) 684-3460**

Appendix A: Subsurface Investigation and Laboratory Testing

Strong Property - North Portland
4931 North Williams Avenue
Portland, Oregon

CGT Project Number G2305938

August 7, 2023

Prepared For:

James Lee
Community Development Partners
126 NE Alberta Street, Suite 202
Portland, Oregon, 97211

Prepared by
Carlson Geotechnical

Exploration Key ..... Figure A1
Soil Classification ..... Figure A2
Exploration Logs ..... Figures A3 – A8

A.1.0 SUBSURFACE INVESTIGATION

Our field investigation consisted of six drilled borings completed on July 28, 2023. The exploration locations are shown on the Site Plan, attached to the geotechnical report as Figure 2. The exploration locations shown therein were determined based on measurements from existing site features (buildings, etc.) and are approximate. Surface elevations indicated on the logs were estimated based on a temporary benchmark (assumed 100-foot elevation at the surface of North Alberta Avenue) shown on the referenced Site Plan and are approximate. The attached figures detail the exploration methods (Figure A1), soil classification criteria (Figure A2), and present detailed logs of the explorations (Figures A3 through A8), as discussed below.

A.1.1 Drilled Borings

CGT observed the advancement of six drilled borings (B-1 through B-6) at the site using a 7822DT GeoProbe drill rig provided and operated by our subcontractor, Western States Soil Conservation of Hubbard, Oregon. The borings were advanced using the hollow-stem auger and mud rotary drilling techniques to depths ranging from approximately 6½ to 51½ feet bgs. Upon completion, the borings were backfilled with granular bentonite. Drilling wastes (cuttings and drilling fluids) were left onsite

A.1.2 In-Situ Testing

A.1.2.1 Standard Penetration Tests (SPTs)

SPTs were conducted within the borings using a split-spoon sampler in general accordance with ASTM D1586. The SPTs were conducted at 2½- to 10-foot intervals to the termination depths of the borings. The SPT is described on the attached Exploration Key, Figure A1.

A.1.2.2 Infiltration Tests

CGT performed two infiltration tests at the site, within the hollow-stem auger borings B-4 and B-6. Details regarding the test procedure and results of the tests are presented in Appendix B.

A.1.3 Material Classification & Sampling

Soil samples were obtained at selected intervals in the borings using the referenced split-spoon (SPT) sampler detailed on Figure A1. A qualified member of CGT's geological staff collected the samples and logged the soils in general accordance with the Visual-Manual Procedure (ASTM D2488). An explanation of this classification system is attached as Figure A2. The SPT samples were stored in sealable plastic bags and transported to our soils laboratory for further examination and testing. Our geological staff visually examined all samples in order to refine the initial field classifications.

A.1.4 Subsurface Conditions

Subsurface conditions are summarized in Section 2.3 of the geotechnical report. Detailed logs of the explorations are presented on the attached exploration logs, Figures A3 through A8.

A.2.0 LABORATORY TESTING

Laboratory testing was performed on samples collected in the field to refine our initial field classifications and determine in-situ parameters. Laboratory testing included the following:

- Thirteen moisture content determinations (ASTM D2216).
- Three percentage passing the U.S. Standard No. 200 Sieve tests (ASTM D1140).

Results of the laboratory tests are shown on the exploration logs.

STRONG PROPERTY - PORTLAND, OREGON *Project Number G2305938*	**FIGURE A1** **Exploration Key**

PL — LL MC	Atterberg limits (plasticity) test results (ASTM D4318): PL = Plastic Limit, LL = Liquid Limit, and MC= Moisture Content (ASTM D2216)
☐ FINES CONTENT (%)	Percentage passing the U.S. Standard No. 200 Sieve (ASTM D1140)

SAMPLING

GRAB	Grab sample
BULK	Bulk sample
SPT	**Standard Penetration Test** (SPT) consists of driving a 2-inch, outside-diameter, split-spoon sampler into the undisturbed formation with repeated blows of a 140-pound, hammer falling a vertical distance of 30 inches (ASTM D1586). The number of blows (N-value) required to drive the sampler the last 12 inches of an 18-inch sample interval is used to characterize the soil consistency or relative density. The drill rig was equipped with an cat-head or automatic hammer to conduct the SPTs. The observed N-values, hammer efficiency, and N_{60} are noted on the boring logs.
MC	**Modified California** sampling consists of 3-inch, outside-diameter, split-spoon sampler (ASTM G3550) driven similarly to the SPT sampling method described above. A sampler diameter correction factor of 0.44 is applied to calculate the equivalent SPT N_{60} value per Lacroix and Horn, 1973.
CORE	**Rock Coring** interval
SH	**Shelby Tube** is a 3-inch, inner-diameter, thin-walled, steel tube push sampler (ASTM D1587) used to collect relatively undisturbed samples of fine-grained soils.
WDCP	**Wildcat Dynamic Cone Penetrometer** (WDCP) test consists of driving 1.1-inch diameter, steel rods with a 1.4-inch diameter, cone tip into the ground using a 35-pound drop hammer with a 15-inch free-fall height. The number of blows required to drive the steel rods is recorded for each 10 centimeters (3.94 inches) of penetration. The blow count for each interval is then converted to the corresponding SPT N_{60} values.
DCP	**Dynamic Cone Penetrometer** (DCP) test consists of driving a 20-millimeter diameter, hardened steel cone on 16-millimeter diameter steel rods into the ground using a 10-kilogram drop hammer with a 460-millimeter free-fall height. The depth of penetration in millimeters is recorded for each drop of the hammer.
POCKET PEN. (tsf)	**Pocket Penetrometer** test is a hand-held instrument that provides an approximation of the unconfined compressive strength in tons per square foot (tsf) of cohesive, fine-grained soils.

CONTACTS

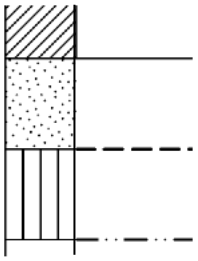

Observed (measured) contact between soil or rock units.

Inferred (approximate) contact between soil or rock units.

Transitional (gradational) contact between soil or rock units.

ADDITIONAL NOTATIONS

Italics	Notes drilling action or digging effort
{ Braces }	Interpretation of material origin/geologic formation (e.g. { Base Rock } or { Columbia River Basalt })

CARLSON CGT GEOTECHNICAL 503-601-8250

All measurements are approximate.

STRONG PROPERTY - PORTLAND, OREGON
Project Number G2305938

FIGURE A2
Soil Classification

Classification of Terms and Content

NAME: Group Name and Symbol
Relative Density or Consistency
Color
Moisture Content
Plasticity
Other Constituents
Other: Grain Shape, Approximate Gradation
Organics, Cement, Structure, Odor, etc.
Geologic Name or Formation

Grain Size

		U.S. Standard Sieve
Fines		<#200 (0.075 mm)
Sand	Fine	#200 - #40 (0.425 mm)
	Medium	#40 - #10 (2 mm)
	Coarse	#10 - #4 (4.75 mm)
Gravel	Fine	#4 - 0.75 inch
	Coarse	0.75 inch - 3 inches
Cobbles		3 to 12 inches
Boulders		> 12 inches

Coarse-Grained (Granular) Soils

Relative Density

SPT N_{60}-Value	Density
0 - 4	Very Loose
4 - 10	Loose
10 - 30	Medium Dense
30 - 50	Dense
>50	Very Dense

Minor Constituents

Percent by Volume	Descriptor	Example
0 - 5%	"Trace" as part of soil description	"trace silt"
5 - 15%	"With" as part of group name	"**POORLY GRADED SAND WITH SILT**"
15 - 49%	Modifier to group name	"**SILTY SAND**"

Fine-Grained (Cohesive) Soils

SPT N_{60}-Value	Torvane tsf Shear Strength	Pocket Pen tsf Unconfined	Consistency	Manual Penetration Test
<2	<0.13	<0.25	Very Soft	Thumb penetrates more than 1 inch
2 - 4	0.13 - 0.25	0.25 - 0.50	Soft	Thumb penetrates about 1 inch
4 - 8	0.25 - 0.50	0.50 - 1.00	Medium Stiff	Thumb penetrates about ¼ inch
8 - 15	0.50 - 1.00	1.00 - 2.00	Stiff	Thumb penetrates less than ¼ inch
15 - 30	1.00 - 2.00	2.00 - 4.00	Very Stiff	Readily indented by thumbnail
>30	>2.00	>4.00	Hard	Difficult to indent by thumbnail

Minor Constituents

Percent by Volume	Descriptor	Example
0 - 5%	"Trace" as part of soil description	"trace fine-grained sand"
5 - 15%	"Some" as part of soil description	"some fine-grained sand"
15 - 30%	"With" as part of group name	"**SILT WITH SAND**"
30 - 49%	Modifier to group name	"**SANDY SILT**"

Moisture Content

Dry: Absence of moisture, dusty, dry to the touch

Moist: Leaves moisture on hand

Wet: Visible free water, likely from below water table

	Plasticity	Dry Strength	Dilatancy	Toughness
ML	Non to Low	Non to Low	Slow to Rapid	Low, can't roll
CL	Low to Medium	Medium to High	None to Slow	Medium
MH	Medium to High	Low to Medium	None to Slow	Low to Medium
CH	Medium to High	High to Very High	None	High

Structure

Stratified: Alternating layers of material or color >6 mm thick

Laminated: Alternating layers < 6 mm thick

Fissured: Breaks along definite fracture planes

Slickensided: Striated, polished, or glossy fracture planes

Blocky: Cohesive soil that can be broken down into small angular lumps which resist further breakdown

Lenses: Has small pockets of different soils, note thickness

Homogeneous: Same color and appearance throughout

Visual-Manual Classification

Major Divisions			Group Symbols	Typical Names
Coarse Grained Soils: More than 50% retained on No. 200 sieve	Gravels: 50% or more *retained* on the No. 4 sieve	Clean Gravels	GW	Well-graded gravels and gravel/sand mixtures, little or no fines
			GP	Poorly-graded gravels and gravel/sand mixtures, little or no fines
		Gravels with Fines	GM	Silty gravels, gravel/sand/silt mixtures
			GC	Clayey gravels, gravel/sand/clay mixtures
	Sands: More than 50% *passing* the No. 4 sieve	Clean Sands	SW	Well-graded sands and gravelly sands, little or no fines
			SP	Poorly-graded sands and gravelly sands, little or no fines
		Sands with Fines	SM	Silty sands, sand/silt mixtures
			SC	Clayey sands, sand/clay mixtures
Fine-Grained Soils: 50% or more Passes No. 200 Sieve	Silt and Clays Low Plasticity Fines		ML	Inorganic silts, rock flour, clayey silts
			CL	Inorganic clays of low to medium plasticity, gravelly clays, sandy clays, lean clays
			OL	Organic soil of low plasticity
	Silt and Clays High Plasticity Fines		MH	Inorganic silts, clayey silts
			CH	Inorganic clays of high plasticity, fat clays
			OH	Organic soil of medium to high plasticity
Highly Organic Soils			PT	Peat, muck, and other highly organic soils

CARLSON CGT GEOTECHNICAL 503-601-8250

References:

ASTM D2487 Standard Practice for Classification of Soils for Engineering Purposes (Unified Soil Classification System)
ASTM D2488 Standard Practice for Description and Identification of Soils (Visual-Manual Procedure)
Terzaghi, K., and Peck, R.B., 1948, Soil Mechanics in Engineering Practice, John Wiley & Sons.

Carlson Geotechnical
A Division of Carlson Testing, Inc.
www.carlsontesting.com

FIGURE A3

Boring B-1

CLIENT James Lee
PROJECT NAME Strong Property
PROJECT NUMBER G2305938
PROJECT LOCATION North Williams Ave & N Alberta St - Portland, OR
DATE STARTED 7/28/23
GROUND ELEVATION 102 ft
ELEVATION DATUM Surface of North Alberta Street = 100'
WEATHER Sunny, 80°F
SURFACE Grass
LOGGED BY AET
REVIEWED BY BMW
DRILLING CONTRACTOR Western States Soil Conservation
SEEPAGE ---
EQUIPMENT GeoProbe 7822DT
GROUNDWATER DURING DRILLING ---
DRILLING METHOD Mud Rotary
GROUNDWATER AFTER DRILLING ---

ELEVATION (ft)	GRAPHIC LOG	GROUP SYMBOL	MATERIAL DESCRIPTION	GROUNDWATER	DEPTH (ft)	SAMPLE TYPE NUMBER	RECOVERY % (RQD)	BLOW COUNTS (N_{SPT} VALUE)	N_{60} VALUE ETR_{Hammer} = 74.3%	DRY UNIT WT. (pcf)
		OL	**ORGANIC SOIL:** Brown, moist, low plasticity, abundant rootlets.		0					
100		ML	**SILT WITH SAND:** Medium stiff, light brown, moist, low plasticity, with fine- to medium grained sand, some lenses of coarse-grained sand.		2					
					4	SPT 1	33	5-6-6 (12)	11	
98		SM	**POORLY GRADED SAND WITH SILT:** Medium dense, dark gray, moist, fine- to coarse-grained, with silt fines.							
					6	SPT 2	33	4-6-6 (12)	11	
96										
94										
92										

▲ SPT N_{60} VALUE ▲
PL LL MC
☐ FINES CONTENT (%) ☐
0 20 40 60 80 100

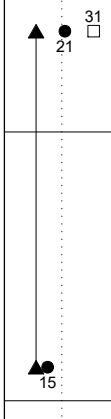

- Boring terminated at 6½ feet bgs.
- No groundwater or caving encountered.
- Boring loosely backfilled with bentonite upon completion.

CGT BOREHOLE DRAFT LOGS.GPJ 8/7/23 DRAFTED BY: AET

Carlson Geotechnical
A Division of Carlson Testing, Inc.
www.carlsontesting.com

FIGURE A4
Boring B-2

CLIENT James Lee
PROJECT NAME Strong Property
PROJECT NUMBER G2305938
PROJECT LOCATION North Williams Ave & N Alberta St - Portland, OR
DATE STARTED 7/28/23
GROUND ELEVATION 100 ft
ELEVATION DATUM Surface of North Alberta Street = 100'
WEATHER Sunny, 80°F
SURFACE Grass Fill
LOGGED BY AET
REVIEWED BY BMW
DRILLING CONTRACTOR Western States Soil Conservation
SEEPAGE ---
EQUIPMENT GeoProbe 7822DT
GROUNDWATER DURING DRILLING ---
DRILLING METHOD Mud Rotary
GROUNDWATER AFTER DRILLING ---

ELEVATION (ft)	GRAPHIC LOG	GROUP SYMBOL	MATERIAL DESCRIPTION	GROUNDWATER	DEPTH (ft)	SAMPLE TYPE NUMBER	RECOVERY % (RQD)	BLOW COUNTS (N_{SPT} VALUE)	N_{60} VALUE ETR_{Hammer} = 74.3%	DRY UNIT WT. (pcf)	▲ SPT N_{60} VALUE ▲ PL LL MC ☐ FINES CONTENT (%) ☐ 0 20 40 60 80 100
		OL FILL	**ORGANIC SOIL FILL:** Brown, moist, low plasticity, abundant rootlets.		0						
		ML FILL	**SILT FILL:** Brown, moist, low plasticity, trace angular gravel fragments up to ½-inch in diameter.								
			POORLY GRADED SAND: Loose to medium dense, dark gray, moist, fine- to coarse-grained, trace fines.		2						
98		SP				SPT 1	33	4-3-5 (8)	7		19
96					4						
94					6	SPT 2	33	5-6-5 (11)	10		18
92			• Boring terminated at 6½ feet bgs. • No groundwater or caving encountered. • Boring loosely backfilled with bentonite upon completion.								
90											

CGT BOREHOLE DRAFT LOGS.GPJ 8/7/23 DRAFTED BY: aet

Carlson Geotechnical
A Division of Carlson Testing, Inc.
www.carlsontesting.com

FIGURE A5
Boring B-3

CLIENT James Lee
PROJECT NAME Strong Property
PROJECT NUMBER G2305938
PROJECT LOCATION North Williams Ave & N Alberta St - Portland, OR
DATE STARTED 7/28/23
GROUND ELEVATION 100 ft
ELEVATION DATUM Surface of North Alberta Street = 100'
WEATHER Sunny, 80°F
SURFACE Grass Fill
LOGGED BY AET
REVIEWED BY BMW
DRILLING CONTRACTOR Western States Soil Conservation
SEEPAGE ---
EQUIPMENT GeoProbe 7822DT
GROUNDWATER DURING DRILLING ---
DRILLING METHOD Mud Rotary
GROUNDWATER AFTER DRILLING ---

ELEVATION (ft)	GRAPHIC LOG	GROUP SYMBOL	MATERIAL DESCRIPTION	GROUNDWATER	DEPTH (ft)	SAMPLE TYPE NUMBER	RECOVERY % (RQD)	BLOW COUNTS (N_{SPT} VALUE)	N_{60} VALUE ETR_{Hammer} = 74.3%	DRY UNIT WT. (pcf)
		OL FILL	**ORGANIC SOIL FILL:** Brown, moist, low plasticity, abundant rootlets.		0					
95		ML FILL	**SILT FILL:** Brown/gray mottled, moist, low plasticity, some fine-grained sand, trace burnt wood fragments, some angular gravel up to ½-inch in diameter.		5	SPT 1	33	11-12-12 (24)	22	
						SPT 2	44	8-14-6 (20)	19	
90		CL FILL	**LEAN CLAY WITH GRAVEL FILL:** Dark gray, moist, medium plasticity, with subrounded to subangular gravel up to ½-inch in diameter, some fine-grained sand, faint petroleum odor.		10	SPT 3	6	7-11-11 (22)	20	
						SPT 4	17	6-6-7 (13)	13	
85			**POORLY GRADED SAND:** Medium dense, dark gray, moist, fine- to coarse-grained, trace fines.		15					
						SPT 5	22	7-9-10 (19)	20	
80			Some gravel fragments up to 1-inch in diameter below 20 feet bgs.		20	SPT 6	33	10-13-13 (26)	31	
75					25	SPT 7	33	23-15-11 (26)	31	
70					30					
		SP				SPT 8	33	9-15-10 (25)	29	
65					35					
60					40					
			Dense, with gravel and cobbles of unknown size below 40 feet bgs.			SPT 9	11	19-23-15 (38)	47	
55					45					
50					50					
			Very dense below 50 feet bgs.			SPT 10	0	14-29-35 (64)	79	
45			• Boring terminated at 51½ feet bgs. • No groundwater or caving encountered. • Boring loosely backfilled with bentonite upon completion.							

▲ SPT N_{60} VALUE ▲
PL LL MC
☐ FINES CONTENT (%) ☐
0 20 40 60 80 100

16
13
18
14

CGT BOREHOLE DRAFT LOGS.GPJ 8/7/23 DRAFTED BY: aet

LU 23-103655 DZ
Exhibit A8

Carlson Geotechnical
A Division of Carlson Testing, Inc.
www.carlsontesting.com

FIGURE A6

Boring B-4

CLIENT James Lee
PROJECT NAME Strong Property
PROJECT NUMBER G2305938
PROJECT LOCATION North Williams Ave & N Alberta St - Portland, OR
DATE STARTED 7/28/23
GROUND ELEVATION 100.75 ft
ELEVATION DATUM Surface of North Alberta Street = 100'
WEATHER Sunny, 80°F
SURFACE Grass Fill
LOGGED BY AET
REVIEWED BY BMW
DRILLING CONTRACTOR Western States Soil Conservation
SEEPAGE ---
EQUIPMENT GeoProbe 7822DT
GROUNDWATER DURING DRILLING ---
DRILLING METHOD Hollow Stem 4¼-inch ID Auger
GROUNDWATER AFTER DRILLING ---

ELEVATION (ft)	GRAPHIC LOG	GROUP SYMBOL	MATERIAL DESCRIPTION	GROUNDWATER	DEPTH (ft)	SAMPLE TYPE NUMBER	RECOVERY % (RQD)	BLOW COUNTS (N_{SPT} VALUE)	N_{60} VALUE ETR_{Hammer} = 74.3%	DRY UNIT WT. (pcf)
100		OL FILL	**ORGANIC SOIL FILL:** Brown, moist, low plasticity, abundant rootlets, trace gravel fragments up to ½-inch in diameter.		0					
			POORLY GRADED SAND: Loose, brown, moist, fine- to coarse-grained, trace rounded gravel up to ½-inch in diameter, trace silt fines.			SPT 1	33	4-4-4 (8)	7	
					5					
95						SPT 2	33	4-3-3 (6)	6	
						SPT 3	22	4-4-5 (9)	8	
					10					
90			Medium dense below 10 feet bgs.			SPT 4	33	9-10-8 (18)	18	
		SP			15					
85										
					20					
80						SPT 5	33	8-9-10 (19)	22	
					25					
75						SPT 6	33	5-7-7 (14)	16	
70										

▲ SPT N_{60} VALUE ▲

PL LL MC

☐ FINES CONTENT (%) ☐

0 20 40 60 80 100

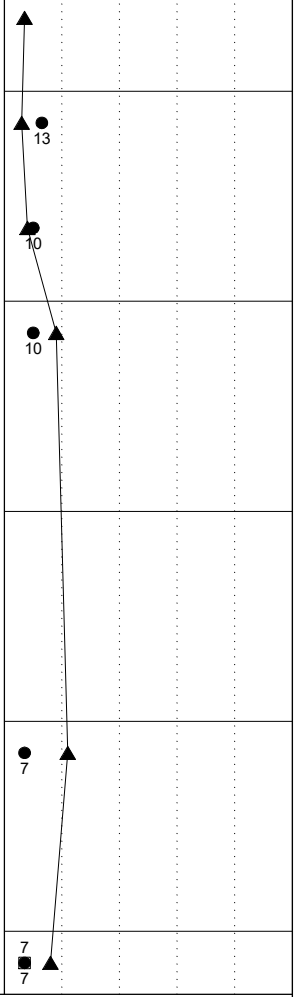

- Boring terminated at 26½ feet bgs due to practical refusal of hollow stem auger on dense sand.
- No groundwater or caving encountered.
- Infiltration test IT-1 performed at 25 feet bgs. Reference Appendix B for test results. SPT 6 conducted following completion of infiltration test.
- Boring loosely backfilled with bentonite upon completion.

CGT BOREHOLE DRAFT LOGS.GPJ 8/7/23 DRAFTED BY: aet

Carlson Geotechnical
A Division of Carlson Testing, Inc.
www.carlsontesting.com

FIGURE A7

Boring B-5

CLIENT James Lee
PROJECT NAME Strong Property
PROJECT NUMBER G2305938
PROJECT LOCATION North Williams Ave & N Alberta St - Portland, OR
DATE STARTED 7/28/23
GROUND ELEVATION 100.5 ft
ELEVATION DATUM Surface of North Alberta Street = 100'
WEATHER Sunny, 80°F
SURFACE Grass Fill
LOGGED BY AET
REVIEWED BY BMW
DRILLING CONTRACTOR Western States Soil Conservation
SEEPAGE ---
EQUIPMENT GeoProbe 7822DT
GROUNDWATER DURING DRILLING ---
DRILLING METHOD Mud Rotary
GROUNDWATER AFTER DRILLING ---

ELEVATION (ft)	GRAPHIC LOG	GROUP SYMBOL	MATERIAL DESCRIPTION	GROUNDWATER	DEPTH (ft)	SAMPLE TYPE NUMBER	RECOVERY % (RQD)	BLOW COUNTS (N_{SPT} VALUE)	N_{60} VALUE ETR_{Hammer} = 74.3%	DRY UNIT WT. (pcf)
100		OL FILL	**ORGANIC SOIL FILL:** Brown, moist, low plasticity, abundant rootlets, trace gravel fragments up to ½-inch in diameter.		0					
			POORLY GRADED SAND FILL: Dark gray, moist, fine- to coarse-grained, trace fines.			SPT 1	33	1-2-4 (6)	6	
					5					
95		SP FILL	approximate 2-foot void encountered during sampling. Very loose below 5 feet bgs.			SPT 2	0	0-0-0 (0)		
						SPT 3	11	0-0-0 (0)		
					10					
90						SPT 4	22	0-0-1 (1)	1	
			POORLY GRADED SAND: Loose, dark gray, moist, fine- to coarse-grained, trace fines.			SPT 5	33	3-4-4 (8)	8	
		SP			15					
85						SPT 6	33	2-4-4 (8)	8	

▲ SPT N_{60} VALUE ▲
PL LL MC
☐ FINES CONTENT (%) ☐
0 20 40 60 80 100

20
17

- Boring terminated at 16½ feet bgs.
- No groundwater or caving encountered.
- Boring loosely backfilled with bentonite upon completion.

CGT BOREHOLE DRAFT LOGS.GPJ 8/7/23 DRAFTED BY: aet

Carlson Geotechnical
A Division of Carlson Testing, Inc.
www.carlsontesting.com

FIGURE A8

Boring B-6

CLIENT James Lee
PROJECT NAME Strong Property
PROJECT NUMBER G2305938
PROJECT LOCATION North Williams Ave & N Alberta St - Portland, OR
DATE STARTED 7/28/23
GROUND ELEVATION 100.5 ft
ELEVATION DATUM Surface of North Alberta Street = 100'
WEATHER Sunny, 80°F
SURFACE Grass Fill
LOGGED BY AET
REVIEWED BY BMW
DRILLING CONTRACTOR Western States Soil Conservation
SEEPAGE ---
EQUIPMENT GeoProbe 7822DT
GROUNDWATER DURING DRILLING ---
DRILLING METHOD Hollow Stem 6¼-inch Auger
GROUNDWATER AFTER DRILLING ---

ELEVATION (ft)	GRAPHIC LOG	GROUP SYMBOL	MATERIAL DESCRIPTION	GROUNDWATER	DEPTH (ft)	SAMPLE TYPE NUMBER	RECOVERY % (RQD)	BLOW COUNTS (N_{SPT} VALUE)	N_{60} VALUE ETR_{Hammer} = 74.3%	DRY UNIT WT. (pcf)	▲ SPT N_{60} VALUE ▲ PL LL MC ☐ FINES CONTENT (%) ☐ 0 20 40 60 80 100
100		OL FILL	**ORGANIC SOIL FILL:** Brown, moist, low plasticity, abundant rootlets, trace gravel fragments up to ¼-inch in diameter.		0						
		ML	**SILT:** *Medium stiff*, brown, moist to dry, low plasticity, some fine-grained sand.								
		ML	**SANDY SILT:** Medium stiff, brown/gray, moist, medium plasticity, with fine- to coarse-grained sand.		2						
98						SPT 1	6	2-2-4 (6)	6		
					4						
96											
					6	SPT 2	11	3-4-4 (8)	7		14 58
94											
92											

- Boring terminated at 6½ feet bgs.
- No groundwater or caving encountered.
- Infiltration test IT-2 performed at 5 feet bgs. Reference Appendix B for test results. SPT 2 conducted following completion of infiltration test.
- Boring loosely backfilled with bentonite upon completion.

CGT BOREHOLE DRAFT LOGS.GPJ 8/7/23 DRAFTED BY: aet

Carlson Geotechnical

A division of Carlson Testing, Inc.
Phone: (503) 601-8250
www.carlsontesting.com

Bend Office	**(541) 330-9155**
Eugene Office	**(541) 345-0289**
Salem Office	**(503) 589-1252**
Tigard Office	**(503) 684-3460**

Appendix B: Results of Infiltration Testing

Strong Property - North Portland
4931 North Williams Avenue
Portland, Oregon

CGT Project Number G2305938

August 7, 2023

Prepared For:

James Lee
Community Development Partners
126 NE Alberta Street, Suite 202
Portland, Oregon, 97211

Prepared by
Carlson Geotechnical

B.1.0 INTRODUCTION

The project civil engineer Mr. Casey Jones, P.E., of Vega Civil Engineering, LLC, requested two infiltration tests be conducted in the southwestern portion of the site. Mr. Jones requested the tests be conducted at depths of about 5 and 30 feet below ground surface (bgs). The tests were performed in drilled hollow-stem auger borings, designated B-4 and B-6 on the Site Plan, which is attached to the main report as Figure 2.

B.2.0 TEST PROCEDURE

The infiltration tests (IT-1 and IT-2) were performed in general accordance with the Encased Falling Head Infiltration Test method as described in Chapter 2 of the 2020 City of Portland Stormwater Management Manual (PSWMM).

Tests IT-1 and IT-2 were performed within 4¼-inch diameter and 6¼-inch diameter hollow stem augers, respectively, as allowed by the referenced method. Once each drilled boring was advanced to the test depth, approximately 2 inches of gravel was added to the bottom of the auger and then the auger was filled with approximately 12 inches of water. In IT-1 (B-4), the drill rig encountered practical refusal with the hollow stem auger on relatively dense sands at a depth of about 25 feet bgs. Therefore the infiltration test for IT-1 was conducted at this depth.

In IT-1, the water infiltrated into the subsurface materials in less than 10 minutes, this was repeated a second time with similar results; therefore, we immediately proceeded with the infiltration test. A steady source of water (hose connected to a water tank) was introduced into the auger at an inflow rate of 2½ gallons per minute (flow rate was measured using a 5-gallon bucket and a stopwatch). Approximately 275 gallons of water was introduced into the hole for 1 hour and 50 minutes and we were unable to achieve any measurable head of water during that time. The test was then terminated.

In IT-2, the soils were allowed to soak for 1 hour in accordance with the test method. After the soaking period, the water level was re-established to 12 inches and the drop in water level was recorded at 10-minute intervals for 1 hour. This process was repeated two additional times, resulting in three trials. Measurements were taken with a tape measure and recorded to the nearest one-eighth of an inch.

Table B1 Results of Infiltration Test IT-1

Location:	Strong Property	Date:	7-28-2023	Exploration Number:	B-4
Test Method:	City of Portland Encased Falling Head	Inner Diameter of pipe	4¼ inches	Infiltration Test Depth:	25 feet bgs
Soil at infiltration test depth:	Poorly Graded Sand		See exploration log for detail		
Test Start Time:	1:38 PM	Notes:	Water inflow = 2½ gallons per minute No head build up after 1+ hours. Test terminated following introduction of approximately 275 gallons of water.		
Test End Time:	3:28 PM				
Head During Test:	None				

Table B2 Results of Infiltration Test IT-2

	Location:	Portland - Strong Property		Date:	7/28/2023	Exploration Number:	B-6
	Test Method:	City of Portland Encased Falling Head		Inner Diameter of Pipe:	6¼ inches	Infiltration Test Depth:	5 feet bgs
	Soil at infiltration test depth:		Silty Sand		see exploration log for detail		

	Time	Time Interval (Minutes)	Measurement (inches)*	Drop in Water level (inches)	Infiltration Rate** (inches per hour)	Remarks
Trial 1	11:44 AM	10	46 5/8	---	---	Water adjusted to provide 12 inch head
	11:54 AM	10	47 5/8	1	---	
	12:04 PM	10	48 1/2	7/8	---	
	12:14 PM	10	49 1/4	3/4	---	
	12:24 PM	10	50	3/4	---	
	12:34 PM	10	50 3/4	3/4	---	
	12:44 PM	10	51 1/2	3/4	**4 7/8**	Trial 1 concluded.
Trial 2	12:59 PM	10	46 5/8	---	---	Water adjusted to provide 12 inch head
	1:09 PM	10	47 3/8	3/4	---	
	1:19 PM	10	48 1/8	3/4	---	
	1:29 PM	10	48 7/8	3/4	---	
	1:39 PM	10	49 3/8	1/2	---	
	1:49 PM	10	49 7/8	1/2	---	
	1:59 PM	10	50 3/8	1/2	**3 3/4**	Trial 2 concluded.
Trial 3	2:02 PM	10	46 1/8	---	---	Water adjusted to provide 12 inch head
	2:12 PM	10	46 5/8	1/2	---	
	2:22 PM	10	47 1/8	1/2	---	
	2:32 PM	10	47 5/8	1/2	---	
	2:42 PM	10	48 1/8	1/2	---	
	2:52 PM	10	48 5/8	1/2	---	
	3:02 PM	10	49 1/8	1/2	**3**	Trial 3 concluded

*Measured to nearest 1/8 of an inch

** Values calculated are raw (unfactored) rates.

B.3.0 DISCUSSION

B.3.1 Measured Infiltration Rates

In IT-1, as indicated above, we were unable to develop a head of water using a steady inflow rate (2½ gallons per minute) during the testing period of 1 hour and 50 minutes. Using the equation presented for the direct infiltration test method in the referenced manual, the raw measured infiltration rate is equal to 2,436 inches per hour at the test location and depth (25 feet bgs). We recommend the raw measured infiltration rate be assigned as 100 inches per hour as means to add some conservatism in design. In the event a larger infiltration rate is desired, we recommend an increased scale of testing be performed using a larger volume of water delivered from a steady water source (e.g. water truck, fire hydrant, etc.).

In IT-2, the average raw (unfactored), infiltration rate[1] was approximately 3 inches per hour at the tested location and depth (5 feet bgs).

Per Table 2-4 of the PSWMM, a minimum allowable factor of safety (FoS) of 2.0 shall be applied to the field-tested infiltration rate(s) where the encased falling head test method is used. We recommend this FoS be applied to calculate the design infiltration rate for use in design of the stormwater infiltration system(s) to be constructed at/near the test location(s) and depth(s).

Once the design is completed, we recommend the infiltration system design (provided by others) and location be reviewed by the geotechnical engineer. If the location and/or depth of the system(s) change from what was indicated at the time of our fieldwork, additional testing may be recommended.

B.3.2 Seasonal High Groundwater Level

As indicated in Table 2-2 of the referenced stormwater manual, a minimum "seasonal correction factor" equal to 6 feet shall be applied when groundwater measurements are made between the months of June and February. Additionally, Figure 2-3 of the referenced stormwater manual indicates that a minimum of 5 feet of separation (measured vertically) is required between the base of the stormwater facility and the "seasonal high groundwater level".

Groundwater was not encountered within depths explored at the site, and no indications (e.g. mottling) of seasonal fluctuations of groundwater were observed in the site soils. Based on our explorations, our experience in the area, review of local water well logs (see Section 2.3.3 of main body of report), and review of the site's geologic setting, we anticipate the groundwater level in the area is at depths in excess of 100 feet bgs. Accordingly, the groundwater level (phreatic surface) is not anticipated to be a factor for infiltration facility design.

[1] Per the referenced infiltration test method: "The average infiltration rate over the last trial should be used to calculate the unfactored infiltration rate."

Appendix D – Stormwater Alternate

Alternate Stormwater Report for Flow-through planter

VEGA
CIVIL ENGINEERING LLC

January 24th, 2024
Bureau of Environmental Services
City of Portland
1900 SW 4th Ave. Ste. 5000
Portland, OR 97201

Subject: 4947 N Williams Avenue Stormwater Alternate

Attachments (4):
Drainage Basin Map
Planter Section SW-141
PAC Report
Geotechnical Report

The proposed development is located at 4947 N Williams Avenue in Portland, OR. The project site contains known contaminated soil therefore we're preparing a stormwater management plan alternative for if underground injection control is not allowed by DEQ. The proposed site has approximately 33,588 SF of impervious area that will need to be treated for stormwater management.

This project is required to provide stormwater management and disposal in accordance with the 2020 Portland Stormwater Management Manual (SWMM) for the newly constructed impervious areas. This includes provisions for detention (quantity control), pollution reduction (quality), and disposal of stormwater runoff. Water quantity control and quality are met with (2) stormwater planters located on the east side of the parking lot.

The Presumptive Approach Calculator (PAC) was used to calculate the Stormwater Planters needed to meet the water quality and quantity control requirements. See attached PAC calculations and summary table below.

Table 1 – Catchment areas and Facility Table

Catchment/ Facility ID	Source	Impervious Area (sf)	Facility Type/ Function	Facility Size (sf)	CN #
North	Building, Parking Lot, & Sidewalks	13,384	Flat Planter	423	98
South	Building, Parking Lot, & Sidewalks	20,204	Flat Planter	640	98
	Total =	33,588sf			

"I hereby certify that this Stormwater Management Report for the 4947 N Williams Avenue has been prepared by me or under my supervision and meets the minimum standards of the City of Portland and normal standards of engineering practice. I hereby acknowledge and agree that the jurisdiction does not and will not assume liability for the sufficiency, suitability, or performance of drainage facilities designed by me."

Please call if you have any questions or concerns.

Regards,

Vega Civil Engineering, LLC.
Martha Williamson, PE
Civil Engineer

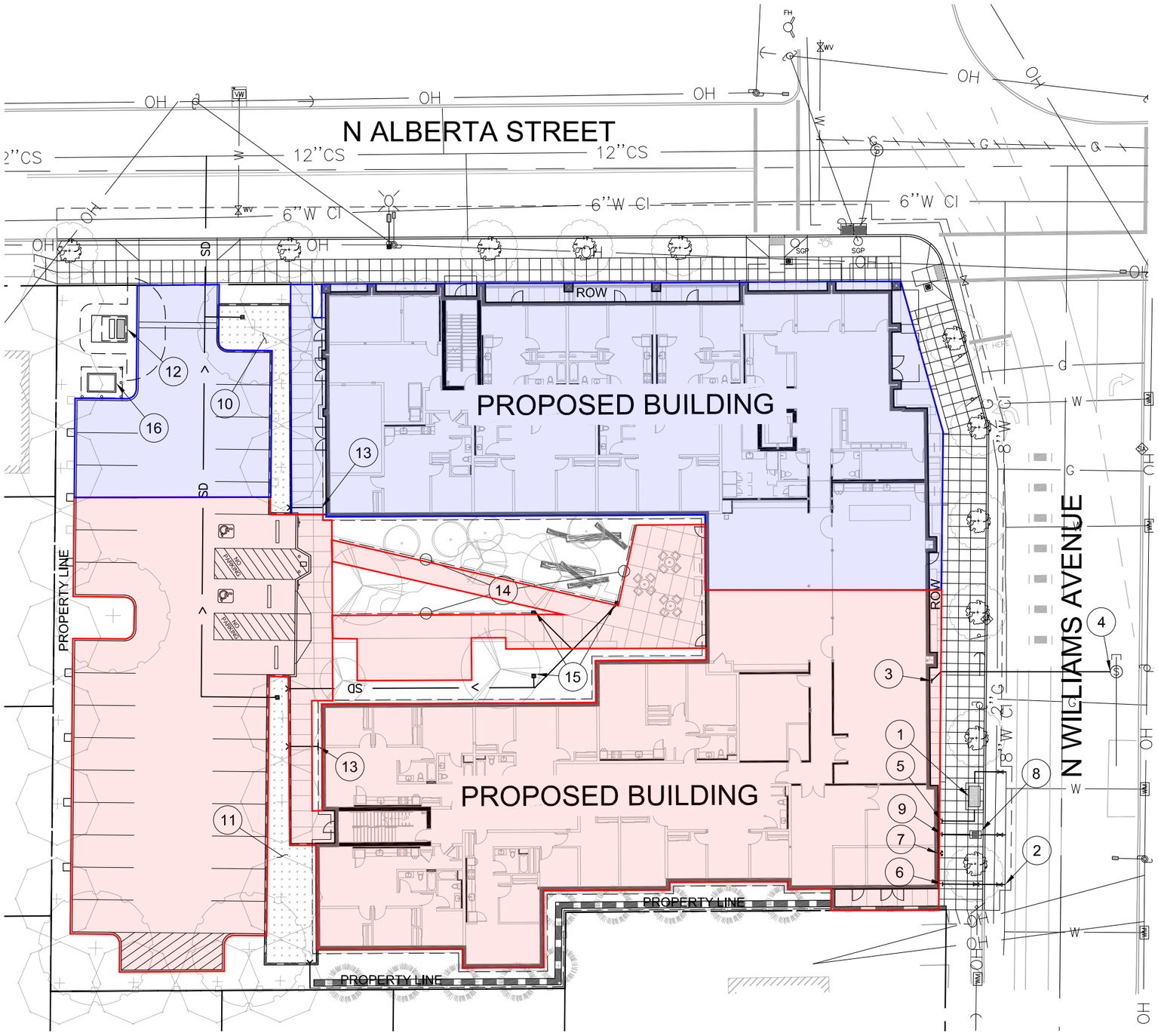

UTILITY PLAN

SCALE: 1"=30'

Catchment Areas:

North Impervious catchment = 13,384 SF

South Impervious Catchment = 20,204 SF

10. 423 SF LINED FLOW-THROUGH STORMWATER PLANTER
11. 641 SF LINED FLOW-THROUGH STORMWATER PLANTER.
12. PP&L PAD-MOUNTED TRANSFORMER VAULT.
13. STORM CONNECTION FROM BUILDING FOR ROOF DRAINAGE.
14. FRENCH DRAIN.
15. AREA DRAIN.
16. PAD-MOUNTED BATTERY ENERGY STORAGE SYSTEM.

STORMWATER NARRATIVE

PRIVATE SITE

STORMWATER RUNOFF FROM PROPOSED ROOF AND PAVED SURFACES WILL BE DIRECTED TO (2) FLOW-THROUGH STORMWATER PLANTERS. THE FLOW-THROUGH PLANTERS SYSTEM WILL DISCHARGE TO THE COMBINED SEWER MAIN IN N ALBERTA STREET.

PUBLIC STREET IMPROVEMENTS

STORMWATER RUNOFF IN THE PUBLIC RIGHT-OF-WAY FOLLOWS THE EXISTING DRAINAGE PATTERN AND IS COLLECTED VIA NEW CATCH BASINS AND DIRECTED TO THE PUBLIC COMBINED SEWER SYSTEM.

UTILITY CONTACTS

ELECTRICAL
CLEO NARANJO
INTERFACE ENGINEERING, INC
CLEON@INTERFACEENG.COM
(503) 382-2724

BES
ROD KRAUTER
BUREAU OF ENVIRONMENTAL SERVICES
RODNEY.KRAUTER@PORTLANDOREGON.GOV
(503) 823-2073

WATER
KARI ANN SPOON
PORTLAND WATER BUREAU
KARIANN.SPOON@PORTLANDOREGON.GOV
(503) 865-6370

N

0 30 60

1 INCH = 30 FEET

HOLST

STRONG PROPERTY HOUSING

4931-4947 N WILLIAMS AVE
PORTLAND, OR 97217

job no. 23-004

VEGA
CIVIL ENGINEERING LLC
503.662.1901 | WWW.VEGACIVIL.COM

11/13/23

title: UTILITY PLAN

sheet: C1.00

LU 23-103655 DZ
Exhibit A8

SIMPLIFIED DESIGN APPROACH

ADJACENT TO BUILDING

Contractor is responsible for verifying that grades will allow piped conveyance to facility.

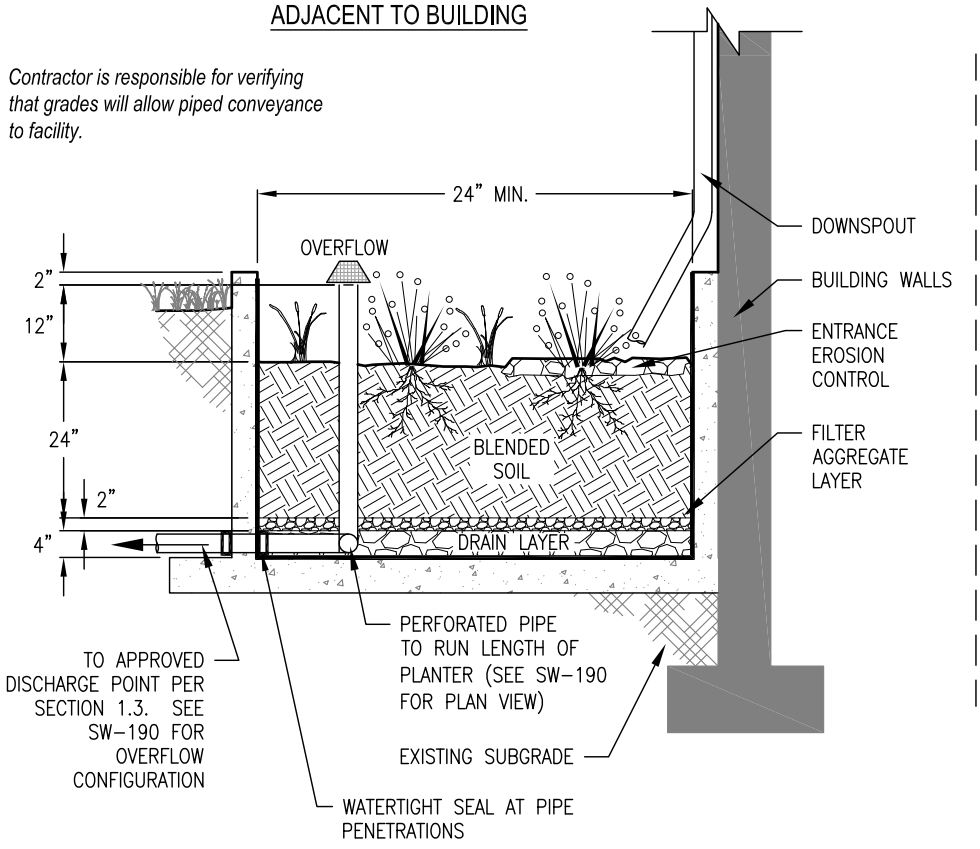

FREESTANDING PLANTER

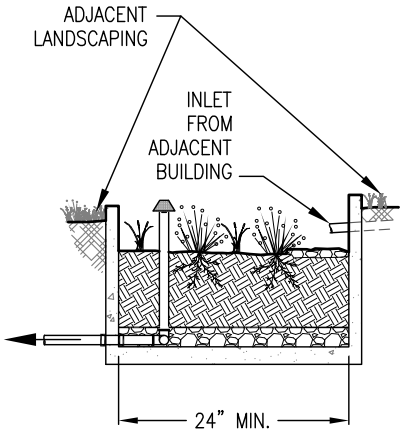

1. Setbacks: No setback is required for lined planters. Walls can't exceed 30" height above grade if within 5' of property line including right-of-way.
2. Facility Slope (planted floor): Maximum of 0.5% in all directions.
3. Planter Structure: A single-pour monolithic concrete shell, without cold joints, is required to avoid the requirement for liner. Include walls on foundation plans. Check state structural standards for foundations.
4. Waterproofing: No additional waterproofing is needed if structure is monolithically poured.
5. Piping: Conform with Oregon Plumbing Specialty Code (OPSC) requirements.
6. Drain Layer: 4" of $\frac{3}{4}$"-1 $\frac{1}{2}$" washed drain rock. Filter aggregate layer: 2-3" of $\frac{1}{4}$"-No.10 washed angular aggregate.
7. Overflow: Overflow elevation must allow for 2" of freeboard, minimum. Protect from debris and sediment with strainer or grate.
8. Blended Soil: Use BES' standard soil blend for stormwater facilities (SWMM Section 6.3) unless otherwise approved. Install minimum of 24" of blended soil.
9. Vegetation: Refer to plant list in SWMM Section 3.5. Minimum container size is 1 gal. Number of plantings per 100sf of facility area: 80 herbaceous plants OR 72 herbaceous plants and 4 small shrubs.
10. Entrance Erosion Control: Install river rock, flagstone, or similar to dissipate the energy of incoming water at entrances and ends of downspout extensions.
11. Inspections: Call BDS IVR Inspection Line, (503) 823-7000, request 487. 3 inspections required.

CONSTRUCTION REQUIREMENTS

Do not allow temporary storage of construction waste or materials in the facilities. Do not allow entry of runoff or sediment during construction.

- DRAWINGS NOT TO SCALE -

Bureau of Environmental Services

STORMWATER MANAGEMENT TYPICAL DETAILS FOR PRIVATE PROPERTY

LINED PLANTER SW-141

9-2-20

PAC Report

Project Details

Project Name	Permit No	Created
Strong		1/5/2024 5:11:53 PM
Project Address	**Designer**	**Last Modified**
4947 N Williams Ave		1/10/2024 5:56:28 PM
	Company	**Report Generated**
		1/10/2024 10:47:54 AM

Project Summary

Catchment Name	Imper-vious Area (sq ft)	Native Soil Design Infilt-ration Rate (in/hr)	Level	Category	Config	Facility Area (excl. free board) (sq ft)	Facility Sizing Ratio (%)	PR Results	Infilt-ration Results	Flow Control Results
North Site	13384	0	3	FlatPlanter	D	423.00	3.16	NA	NA	Pass
South Site	20204	0	3	FlatPlanter	D	640.00	3.17	NA	NA	Pass

North Site

Site Soils & Infiltration Testing	Infiltration Testing Procedure NA Tested Native Soil Infiltration Rate 0 in/hr
Correction Factor	CF test 2
Design Infiltration Rates	Native Soil 0 in/hr Imported Blended Soil 6 in/hr
Catchment Information	Hierarchy Level 3 Hierarchy Description Discharge to a combined sewer. Pollution Reduction Requirement N/A Infiltration Requirement N/A Flow Control Requirement Limit the 25-yr post-development peak flow to the 10-year pre-development peak flow. Impervious Area 13384 sq ft 0.307 acre Pre-Development Time of Concentration (Tc pre) 5 min Post-Development Time of Concentration (Tc post) 5 min Pre-Development Curve Number (CN pre) 72 Post-Development Curve Number (CN post) 98

SBUH Results

Post-Development Runoff

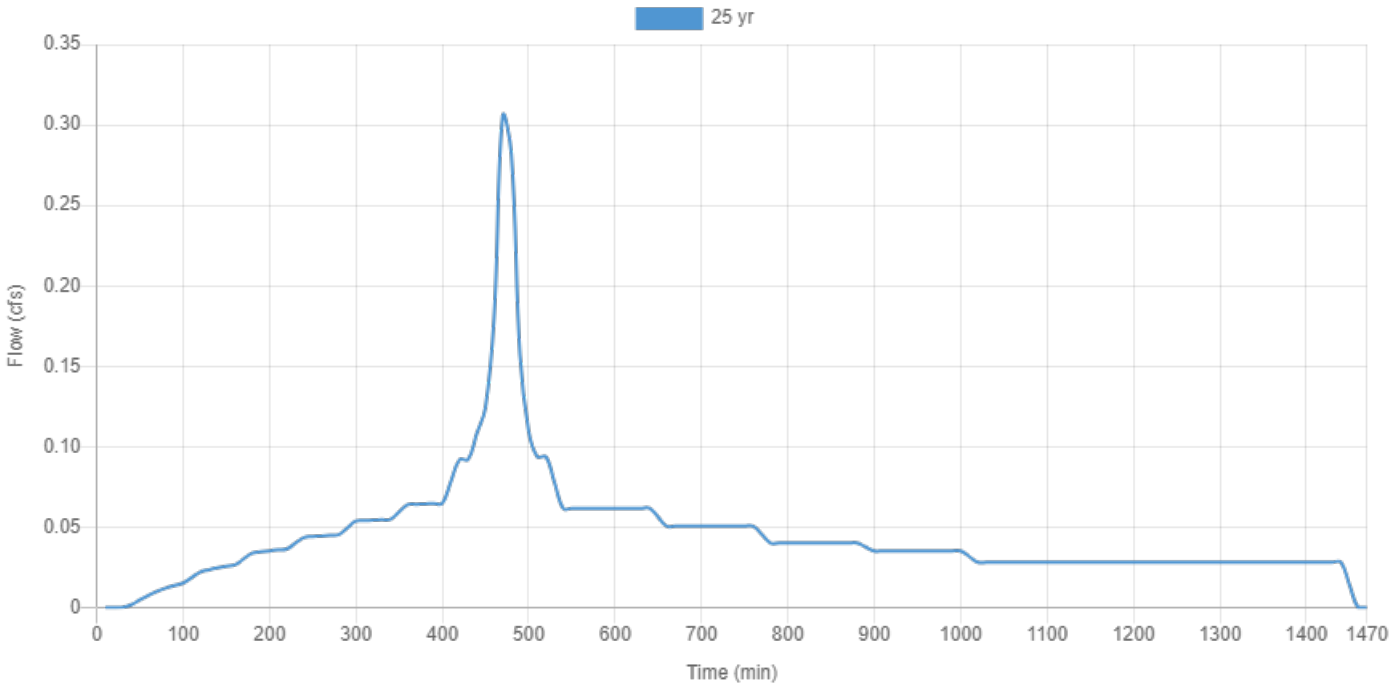

10-yr Pre - Development Rate and Volume		25-yr Post - Development Rate and Volume	
Peak Rate (cfs)	**Total Volume (cf)**	**Peak Rate (cfs)**	**Total Volume (cf)**
0.0636	1177.8	0.3056	3976.8

	Overflow		Underdrain Outflow		Infiltration	
	Peak Rate (cfs)	**Total Volume (cf)**	**Peak Rate (cfs)**	**Total Volume (cf)**	**Peak Rate (cfs)**	**Total Volume (cf)**
25-Year	0.003	20	0.059	3938.5	0	0

Flat Planter

Site Soils & Infiltration Testing	Category Flat Planter Shape Null Location Parcel Configuration D: Lined Facility with RS and Ud **Above Grade Storage Data** Bottom Area 423 sq ft Bottom Width 5.00 ft Overflow Height 18.0 in Total Depth of Blended Soil plus Rock 36 in Surface Storage Capacity at Overflow 634.5 cu ft Design Infiltration Rate to Soil Underlying the Facility 0.000 cfs Design Infiltration Rate for Imported Blended Soil in the Facility 0.059 cfs **Below Grade Storage Data** Catchment is too small for flow control? No Rock Area 63.45 sq ft Rock Width 3.00 ft Rock Storage Depth 12.0 in Rock Porosity 0.3 Underdrain Height

	4 in Percent of Facility Base that Allows Infiltration 0 % Orifice (Y/N)? Yes Orifice Diameter 1.750 in
Facility Facts	Total Facility Area (excluding freeboard) 423.00 sq ft Sizing Ratio 3.16 %
Flow Control Results	Flow Control Score Pass

25 YEAR POST-DEVELOPMENT OUTFLOW (CFS)		10 YEAR PRE-DEVELOPMENT RUNOFF (CFS)
0.0617	<=	0.0636

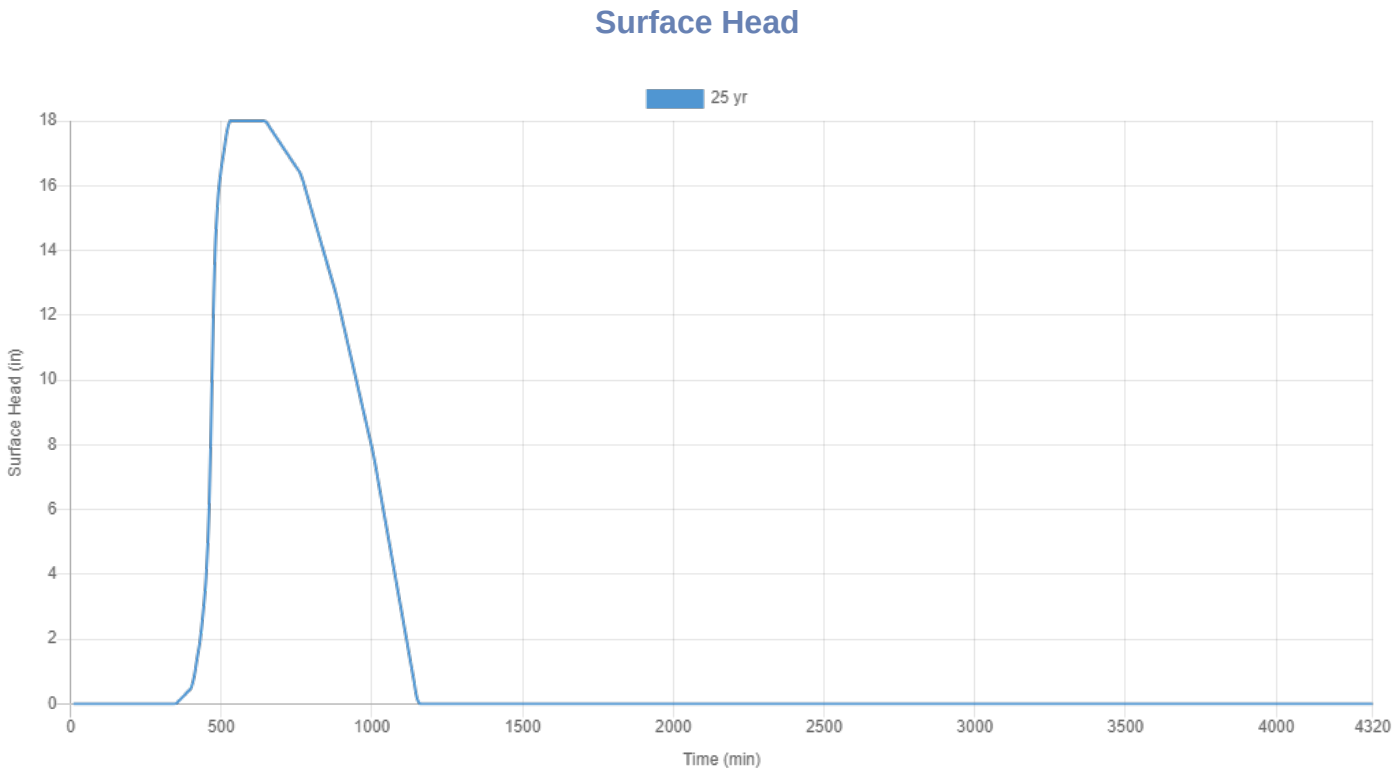

25-Year *

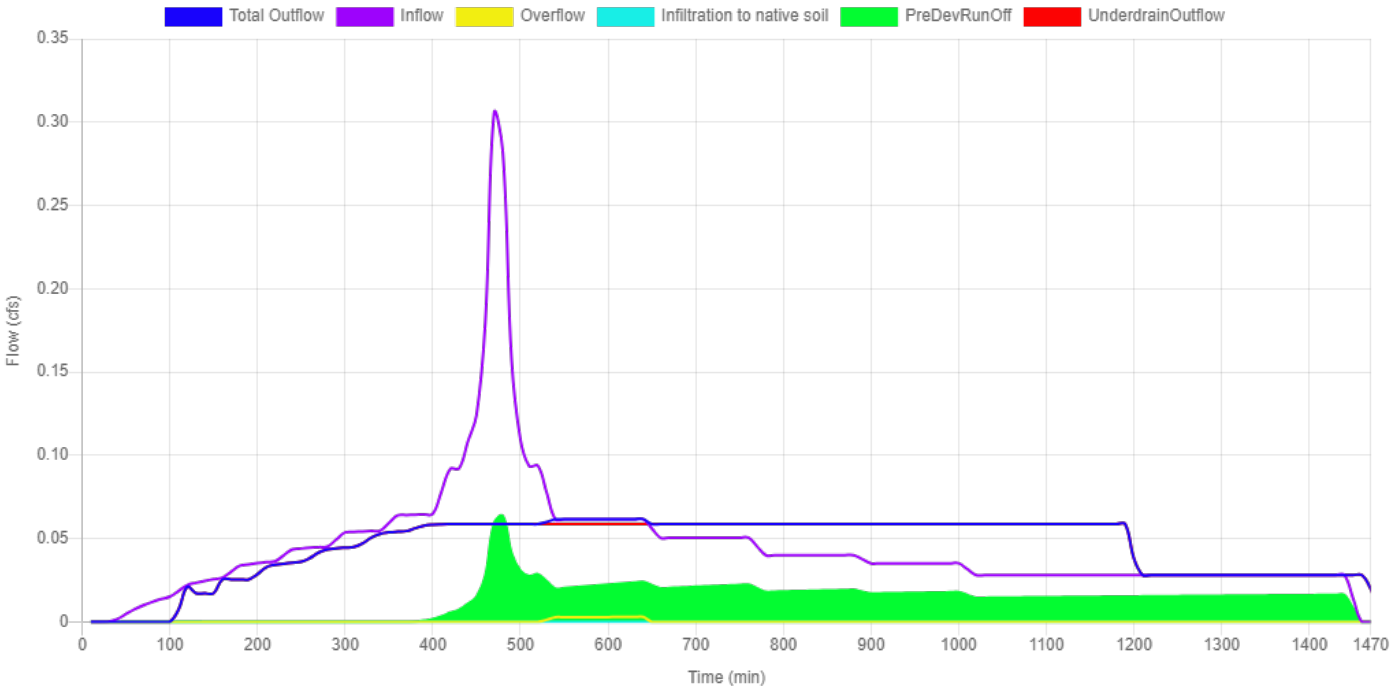

**Except for the predevelopment runoff, which is for the 10-yr storm event.*

25-Year *

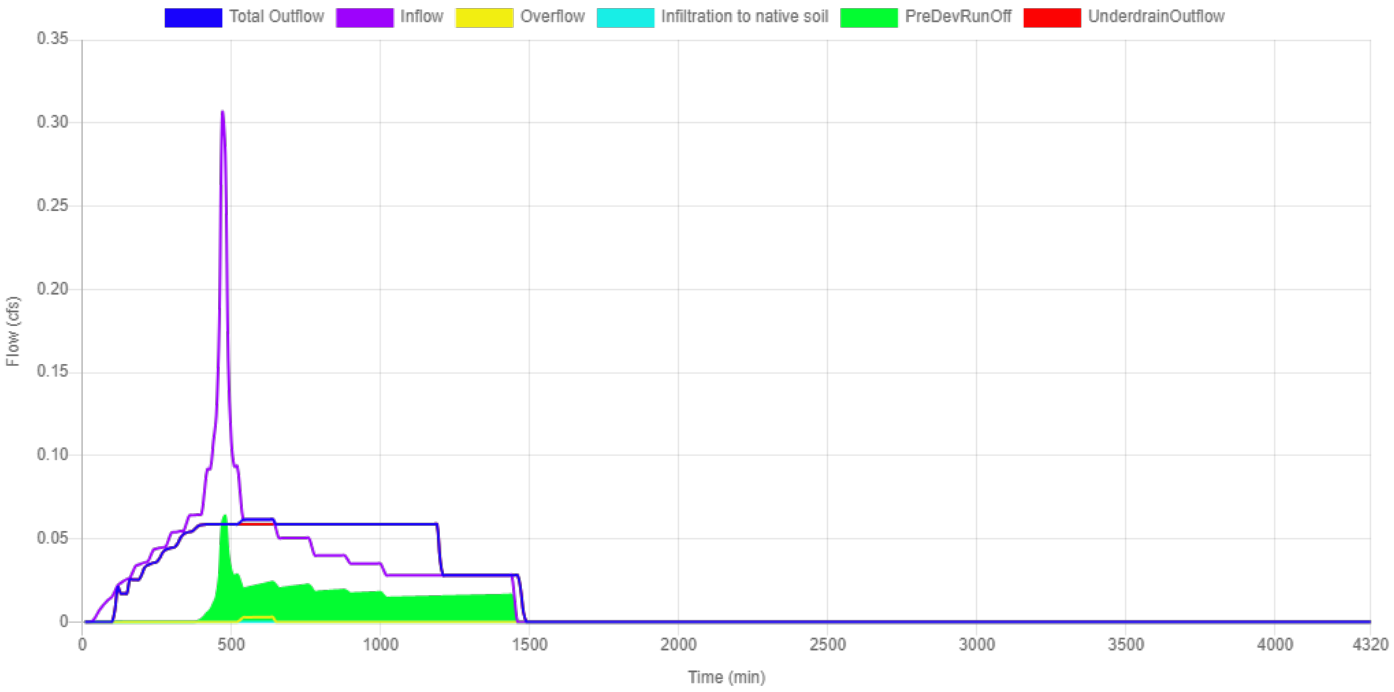

**Except for the predevelopment runoff, which is for the 10-yr storm event.*

South Site

Site Soils & Infiltration Testing	Infiltration Testing Procedure NA Tested Native Soil Infiltration Rate 0 in/hr
Correction Factor	CF test 2
Design Infiltration Rates	Native Soil 0 in/hr Imported Blended Soil 6 in/hr
Catchment Information	Hierarchy Level 3 Hierarchy Description Discharge to a combined sewer. Pollution Reduction Requirement N/A Infiltration Requirement N/A Flow Control Requirement Limit the 25-yr post-development peak flow to the 10-year pre-development peak flow. Impervious Area 20204 sq ft 0.464 acre Pre-Development Time of Concentration (Tc pre) 5 min Post-Development Time of Concentration (Tc post) 5 min Pre-Development Curve Number (CN pre) 72 Post-Development Curve Number (CN post) 98

SBUH Results

Post-Development Runoff

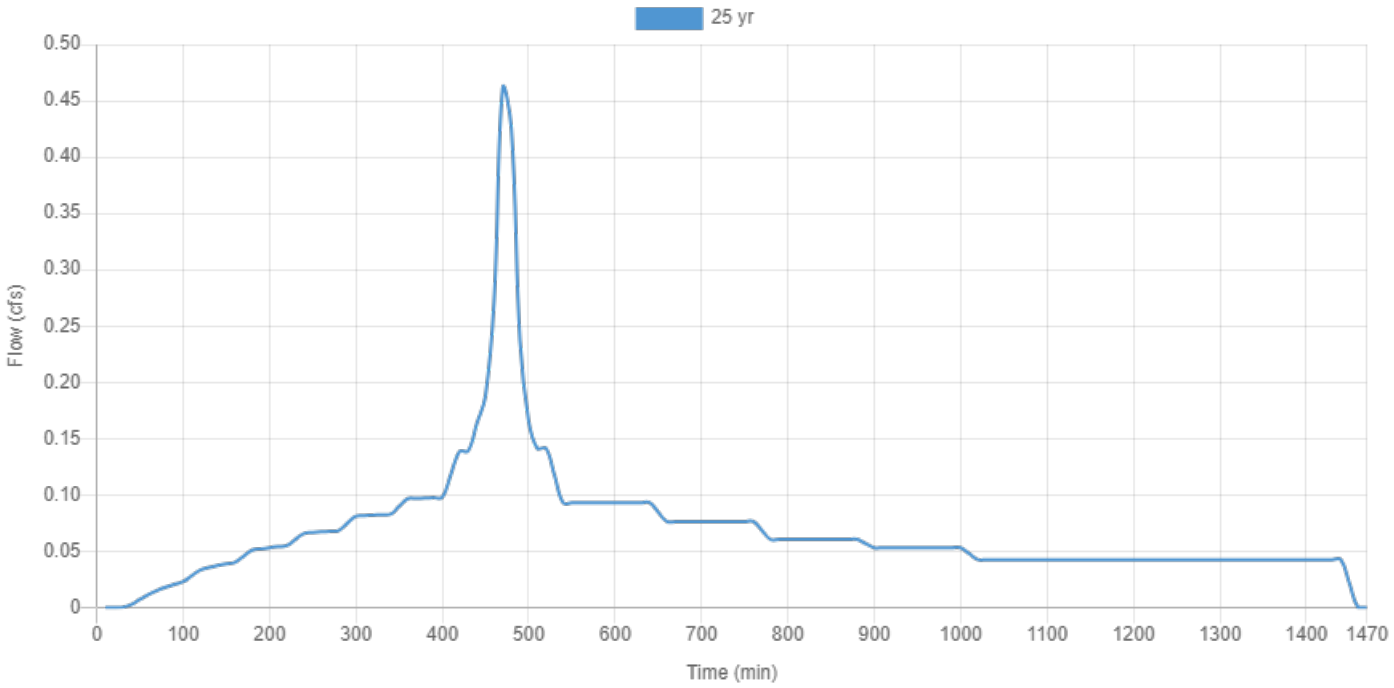

10-yr Pre - Development Rate and Volume		25-yr Post - Development Rate and Volume	
Peak Rate (cfs)	**Total Volume (cf)**	**Peak Rate (cfs)**	**Total Volume (cf)**
0.096	1778	0.4613	6003.3

	Overflow		Underdrain Outflow		Infiltration	
	Peak Rate (cfs)	**Total Volume (cf)**	**Peak Rate (cfs)**	**Total Volume (cf)**	**Peak Rate (cfs)**	**Total Volume (cf)**
25-Year	0.004	25	0.089	5950.5	0	0

Flat Planter

Site Soils & Infiltration Testing	Category Flat Planter Shape Null Location Parcel Configuration D: Lined Facility with RS and Ud **Above Grade Storage Data** Bottom Area 640 sq ft Bottom Width 5.00 ft Overflow Height 18.0 in Total Depth of Blended Soil plus Rock 36 in Surface Storage Capacity at Overflow 960 cu ft Design Infiltration Rate to Soil Underlying the Facility 0.000 cfs Design Infiltration Rate for Imported Blended Soil in the Facility 0.089 cfs **Below Grade Storage Data** Catchment is too small for flow control? No Rock Area 96.15 sq ft Rock Width 3.00 ft Rock Storage Depth 12.0 in Rock Porosity 0.3 Underdrain Height

	4 in Percent of Facility Base that Allows Infiltration 0 % Orifice (Y/N)? Yes Orifice Diameter 2.000 in
Facility Facts	Total Facility Area (excluding freeboard) 640.00 sq ft Sizing Ratio 3.17 %
Flow Control Results	Flow Control Score Pass

25 YEAR POST-DEVELOPMENT OUTFLOW (CFS)		10 YEAR PRE-DEVELOPMENT RUNOFF (CFS)
0.0932	<=	0.0960

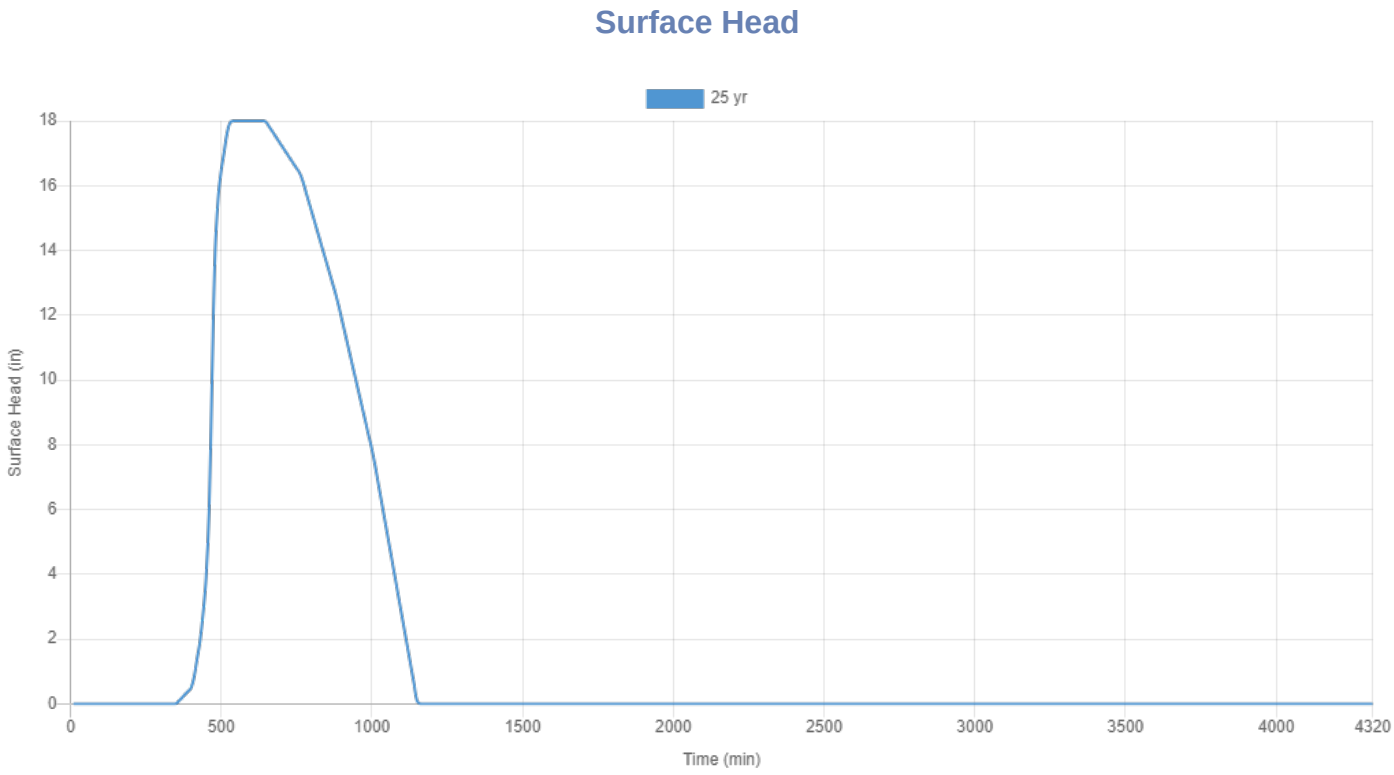

25-Year *

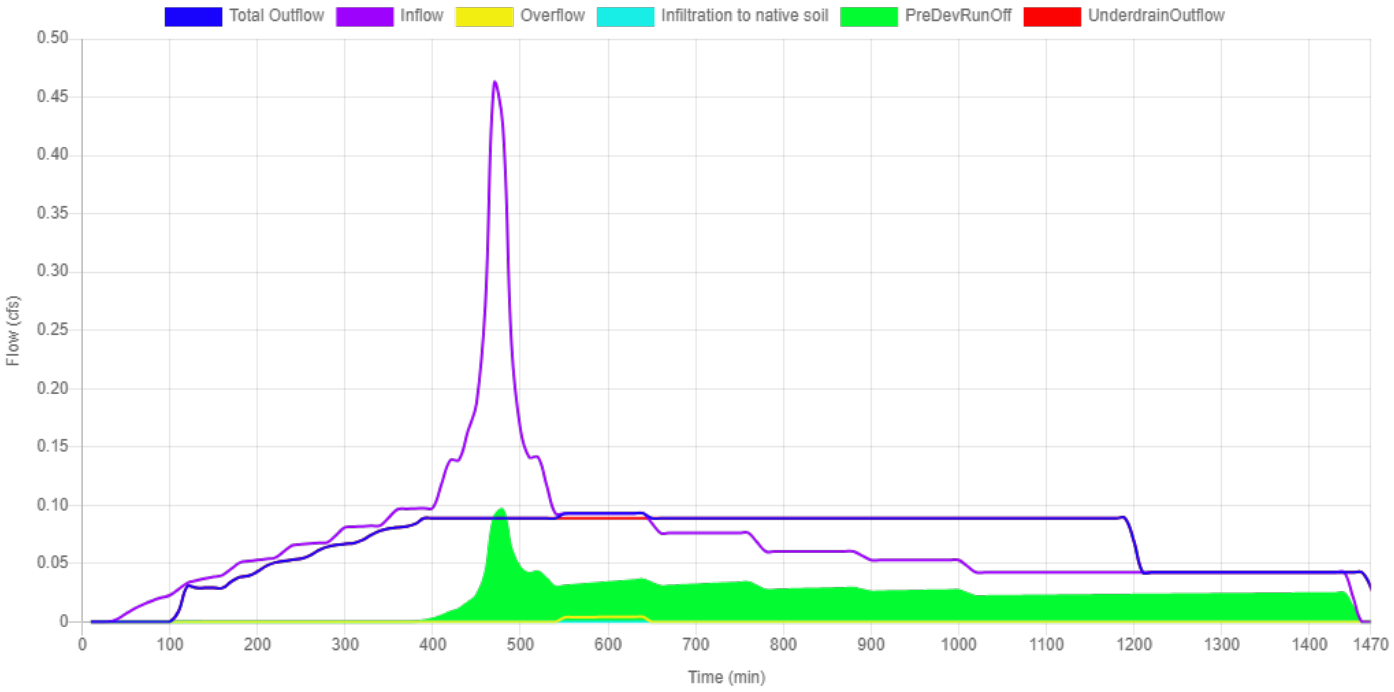

Except for the predevelopment runoff, which is for the 10-yr storm event.

25-Year *

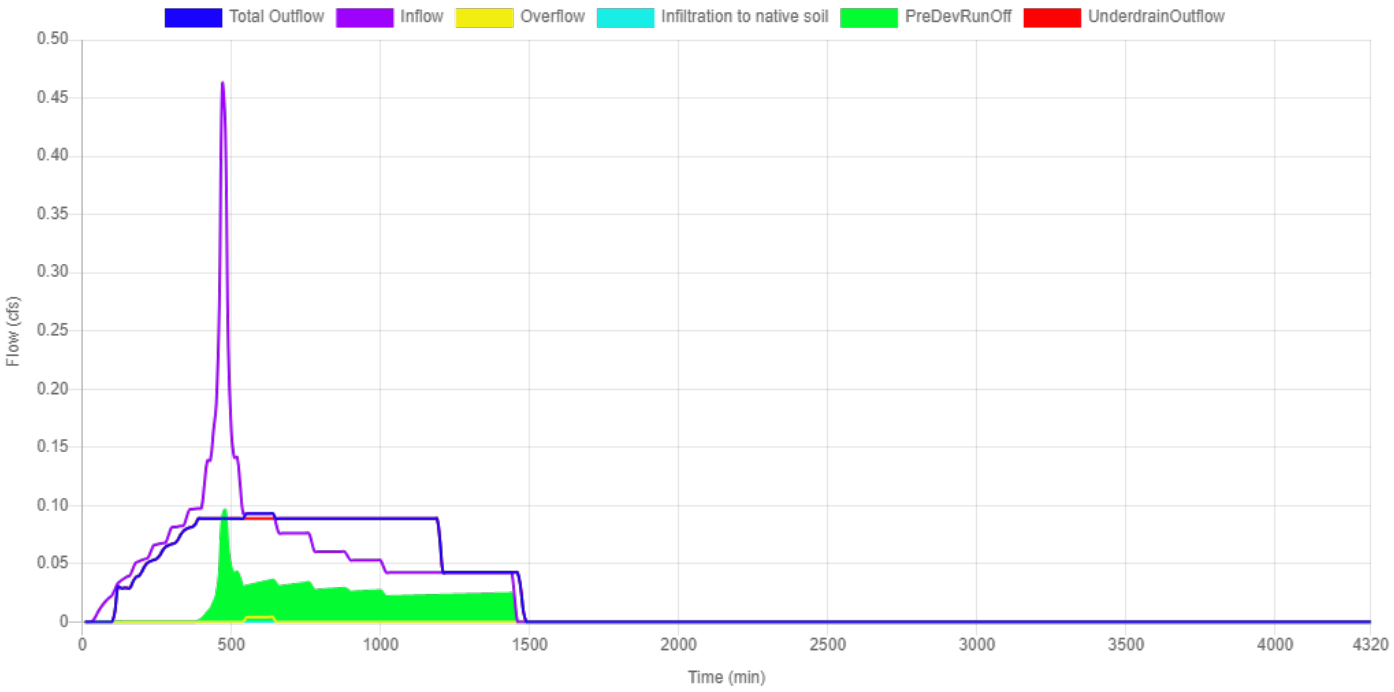

Except for the predevelopment runoff, which is for the 10-yr storm event.

Carlson Geotechnical

A division of Carlson Testing, Inc.
Phone: (503) 601-8250
www.carlsontesting.com

Bend Office	**(541) 330-9155**
Eugene Office	**(541) 345-0289**
Salem Office	**(503) 589-1252**
Tigard Office	**(503) 684-3460**

Report of
Geotechnical Investigation & Infiltration Testing
Strong Property - North Portland
4931 North Williams Avenue
Portland, Oregon

CGT Project Number G2305938

Prepared for

James Lee
Community Development Partners
126 NE Alberta Street, Suite 202
Portland, Oregon, 97211

August 7, 2023

Carlson Geotechnical

A division of Carlson Testing, Inc.
Phone: (503) 601-8250
www.carlsontesting.com

Bend Office	(541) 330-9155
Eugene Office	(541) 345-0289
Salem Office	(503) 589-1252
Tigard Office	(503) 684-3460

August 7, 2023

James Lee
Community Development Partners
126 NE Alberta Street, Suite 202
Portland, Oregon, 97211

Report of
Geotechnical Investigation & Infiltration Testing
Strong Property - North Portland
4931 North Williams Avenue
Portland, Oregon

CGT Project Number G2305938

Dear James Lee:

Carlson Geotechnical (CGT), a division of Carlson Testing, Inc. (CTI), is pleased to submit this report summarizing the results of our geotechnical investigation and infiltration testing for the proposed Strong Property project. The site spans five parcels located at the southwest quadrant of the intersection of North Williams Avenue and North Alberta Street in Portland, Oregon. The parcels consist of Tax Lots 114, 106, 20, and 4931-4947. We performed our work in general accordance with CGT Proposal GP23-137, dated June 9, 2023. Written authorization for our services was received on June 16, 2023.

We appreciate the opportunity to work with you on this project. Please contact us at (503) 601-8250 if you have any questions regarding this report.

Respectfully Submitted,
CARLSON GEOTECHNICAL

Ariana Tenold, G.I.T.
Geotechnical Project Manager
atenold@carlsontesting.com

Brad M. Wilcox, P.E., G.E.
Principal Geotechnical Engineer
bwilcox@carlsontesting.com

Doc ID: G:\GEOTECH\PROJECTS\2023 Projects\G2305938 - Strong Property\G2305938 - GEO\008 - Deliverables\Report\G2305938 Geotechnical Investigation.docx

TABLE OF CONTENTS

1.0 INTRODUCTION 4
1.1 Project Information 4
1.2 Scope of Services 4
2.0 SITE DESCRIPTION 5
2.1 Site Geology 5
2.2 Site Surface Conditions 5
2.3 Subsurface Conditions 6
3.0 SEISMIC CONSIDERATIONS 8
3.1 Seismic Design 8
3.2 Seismic Hazards 8
4.0 CONCLUSIONS 10
4.1 Undocumented Fills 10
4.2 Subgrade Moisture Sensitivity 11
5.0 RECOMMENDATIONS 11
5.1 Site Preparation 11
5.2 Temporary Excavations 12
5.3 Wet Weather Considerations 13
5.4 Structural Fill 14
5.5 Shallow Foundations 16
5.6 Rigid Retaining Walls 18
5.7 Floor Slabs 19
5.8 Pavements 20
5.9 Additional Considerations 21
6.0 RECOMMENDED ADDITIONAL SERVICES 21
6.1 Design Review 21
6.2 Observation of Construction 21
7.0 LIMITATIONS 22

ATTACHMENTS

Site Location ..... Figure 1
Site Plan ..... Figure 2
Site Photographs ..... Figure 3
Retaining Wall Static and Seismic Pressure Distribution ..... Figure 4
Retaining Wall Surcharge Pressure Distribution ..... Figure 5

Subsurface Investigation and Laboratory Testing ..... Appendix A
Results of Infiltration Testing ..... Appendix B

1.0 INTRODUCTION

Carlson Geotechnical (CGT), a division of Carlson Testing, Inc. (CTI), is pleased to submit this report summarizing the results of our geotechnical investigation and infiltration testing for the proposed Strong Property project. The site spans five parcels located at the southwest quadrant of the intersection of North Williams Avenue and North Alberta Street in Portland, Oregon, as shown on the attached Site Location, Figure 1.

1.1 Project Information

CGT developed an understanding of the proposed project based on our correspondence with our client and project documents provided to us on June 2, 2023. Based on our review, we understand the project will include:

- Demolition of the existing residence within one of the tax lots (20 North Alberta Street, Portland).
- Construction of a new apartment building within the east portion of the overall development site. The building will be four stories, wood-framed, and incorporate a slab on grade ground floor. No below-grade levels (basements) are proposed. For the purposes of this report, we have assumed maximum column, continuous wall, and uniform floor slab loads will be on the order of 60 kips, 4 kips per lineal foot (klf), and 200 pounds per square foot (psf), respectively.
- Construction of a paved parking lot and installation of appurtenant underground utilities to serve the new building within the west portion of the site.
- Although no stormwater management plans have been provided, we understand that stormwater collected from new impervious areas of the site will be disposed of, at least in part, via onsite infiltration. Design of infiltration facility(ies) will rest with others. Two infiltration tests were requested as part of this assignment.
- Although no grading plans have been provided, we anticipate permanent grade changes at the relatively level site will be minimal, with maximum cuts and fills on the order of 2 feet in depth.

1.2 Scope of Services

Our scope of work included the following:

- Contact the Oregon Utilities Notification Center to mark the locations of public utilities within a 20-foot radius of our explorations at the site. CGT also subcontracted a private utility locator service to mark the locations of detectable private utilities within the same radius.
- Explore subsurface conditions at the site by advancing six drilled borings to depths of approximately 6½ to 51½ feet below ground surface (bgs). Details of the subsurface investigation are presented in Appendix A.
- Conduct infiltration testing in two of the borings. Results of the infiltration testing are presented in Appendix B.
- Classify the soils encountered in the explorations in general accordance with ASTM D2488 (Visual-Manual Procedure).
- Provide a technical narrative describing surface and subsurface deposits, and local geology of the site, based on the results of our explorations and published geologic mapping.
- Provide recommendations for the Seismic Site Class, mapped maximum considered earthquake spectral response accelerations, and site seismic coefficients.

- Provide a qualitative evaluation of seismic hazards at the site, including earthquake-induced liquefaction, landsliding, and surface rupture due to faulting or lateral spread.
- Provide geotechnical recommendations for site preparation and earthwork.
- Provide geotechnical engineering recommendations for use in design and construction of shallow foundations, floor slabs, and pavements.
- Provide this written report summarizing the results of our geotechnical investigation and recommendations for the project.

2.0 SITE DESCRIPTION

2.1 Site Geology

Based on available geologic mapping of the area, the site is underlain by Pleistocene catastrophic flood deposits[1] originating from glacial outburst floods of Lake Missoula. The flood deposits were produced by the periodic failure of glacial ice dams that impounded Lake Missoula in present day Montana between 18,000 to 15,000 years ago[2]. Floodwaters raged through Idaho, eastern Washington, and through the Columbia River Gorge. Near Rainier, Oregon, the river channel was restricted, causing floodwaters to back up the Willamette Valley as far south as Eugene. Floodwaters in the Portland area were as much as 400 feet deep, leaving only the tops of the tallest hills dry. The flood deposits are typically split into three different facies: the coarse-grained facies, the fine-grained facies, and the channel facies. The site is mapped in the fine-grained facies. The fine-grained Missoula flood deposits typically consist of silt, clay, and fine- to coarse-grained sand. Beds are generally poorly defined and thin (less than 3 feet thick). Composite thickness is typically up to 115 feet; however, thickness in the vicinity of the site is about 90 feet[3].

The flood deposits are underlain by the Miocene-Pliocene Troutdale Formation[4]. The Troutdale Formation consists of layers of poorly lithified sediments, including silt, clay, sand, gravel, cobbles, and boulders deposited by ancestral rivers draining off the western Cascades and reworked by later streams and rivers. These sediments are friable to moderately strong deposits of pebbles and cobble conglomerate, as well as interbeds of sandstone, siltstone, and claystone. The gravel predominantly consists of mafic volcanic cobbles and pebbles, as well as characteristic white to yellow to red, well-rounded, quartzite clasts. Bed thickness ranges from about 60 to 275 feet, with a total formation thickness upwards of 1,100 feet.

2.2 Site Surface Conditions

The overall, approximate 0.8-acre site consisted of five adjacent tax lots. During the time of our field investigation, the site was bordered by residential properties and a church to the south and west, Alberta Street to the north, and Williams Avenue to the east. The relatively level site was occupied by an existing residential structure (to be removed) and a concrete retaining wall (to be removed). The remainder of the site was vegetated with short grasses, some blackberry brambles, and scattered trees. Site layout and surface

---

1 Madin, I.P., 2004. Geologic mapping and database for the Portland area fault studies: Final report, Clackamas, Multnomah, and Washington Counties, Oregon: Oregon Department of Geology and Mineral Industries, Open-File Report O-04-02, scale 1:100,000.

2 Allen, John Eliot, Burns, Marjorie, and Burns, Scott, 2009. Cataclysms on the Columbia, The Great Missoula Floods, Revised Second Edition: Ooligan Press, Portland State University.

3 Madin, Ian P., 1990. Earthquake Hazard Geology of the Portland metropolitan area, Oregon. Oregon Department of Geology and Mineral Industries Open File Report 90-2.

4 Beeson, M.H., 1989, Geologic Map of the Portland Quadrangle, Multnomah and Washington Counties, Oregon, and Clark County, Washington, State of Oregon Department of Geology and Mineral Industries, GMS-75.

conditions at the time of our field investigation are shown on the attached Site Plan (Figure 2) and Site Photographs (Figure 3).

2.3 Subsurface Conditions

2.3.1 Subsurface Investigation & Laboratory Testing

Our subsurface investigation consisted of six drilled borings (B-1 through B-6) completed on July 28, 2023. The approximate exploration locations are shown on the Site Plan, attached as Figure 2. In summary, the borings were advanced to depths ranging from about 6½ to 51½ feet bgs. Details regarding the subsurface investigation, logs of the explorations, and results of laboratory testing are presented in Appendix A. Subsurface conditions encountered during our investigation are summarized below.

2.3.2 Subsurface Materials

Logs of the explorations are presented in Appendix A. The following describes each of the subsurface materials encountered at the site.

2.3.2.1 Undocumented Fill

Undocumented fill was encountered at the surface of boring B-2 through B-6. Undocumented fill refers to materials placed without (available) records of subgrade conditions or evaluation of compaction. The specific types of undocumented fill observed at the site are described in the following paragraphs:

Undocumented Organic Soil Fill (OL Fill)

Undocumented organic soil fill was encountered at the surface of borings B-2 through B-6. This material was typically brown, moist, exhibited low plasticity, contained abundant rootlets, and subangular gravel up to ½-inch in diameter. This fill soil extended to a depth of about ¼ to ½ foot bgs.

Undocumented Poorly Graded Sand Fill (SP Fill)

Underlying the organic soil fill in B-5 was undocumented poorly graded sand fill. This material was typically dark gray, moist, fine- to coarse grained and contained trace fines. An approximate 2-foot void was encountered at 5 feet bgs during our soil sampling within this boring. This fill soil extended to a depth of about 12 feet bgs.

Undocumented Silt Fill (ML Fill)

Underlying the organic soil fill in B-2 and B-3 was undocumented silt fill. This material was typically brown, moist, exhibited low plasticity, and contained a varying amount of sand and gravel fragments up to ½-inch in diameter. This fill soil extended to depths of about 1½ and 5 feet bgs in borings B-2 and B-5, respectively.

Undocumented Lean Clay with Gravel Fill (CL Fill)

Underlying the silt fill in B-3 was undocumented lean clay with gravel fill. This material was typically dark gray, moist, exhibited medium plasticity, contained varying amounts of sand and gravel fragments up to ½-inch in diameter, and exhibited a slight petroleum odor. This fill soil extended to a depth of about 11 feet bgs in that boring.

2.3.2.2 Topsoil

Organic Soil (OL)

Organic soil was encountered at the surface of boring B-1. This material was typically brown, moist, exhibited low plasticity, contained abundant rootlets, and extended to depths of about ½ -foot bgs.

2.3.2.3 Fine-Grained Flood Deposits

Underlying the organic soil in boring B-1, and the fill soils in B-2 through B-6 was native silt with sand to sandy silt (ML) and poorly graded sand to sand with silt (SP, SM). These alluvial soils are consistent with the fine-grained flood deposits mapped in the vicinity of the site and described in Section 2.1. The specific types of fine-grained flood deposits observed at the site are described in the following paragraphs:

Silt with Sand to Sandy Silt (ML)

Underlying the organic soil in boring B-1 and the undocumented fill in B-6 was native silty soil. This soil was typically medium stiff, light brown to brown/gray, moist, exhibited low to medium plasticity, and contained varying amounts of fine- to coarse-grained sand. This soil extended to depths of about 3½ feet bgs in B-1, and extended the full depth explored in B-6, approximately 6½ feet bgs.

Poorly Graded Sand to Silty Sand (SP, SM)

Underlying the undocumented fill in borings B-2 through B-5, and underlying the native silt with sand in boring B-1 was native, sandy soil. This soil was typically medium dense to very dense, brown to dark gray, moist, fine- to coarse-grained and contained varying amounts of rounded gravel up to ½-inch in diameter. The native sandy soil extended to the full depths explored in B-1 through B-5, 6½ to 51½ feet bgs, respectively.

2.3.3 Groundwater

Borings B-1 through B-3, and B-5 were advanced using the mud rotary (wet) drilling method, which precluded direct observation of groundwater during advancement of the borings. Borings B-4 and B-6 were advanced using the hollow-stem auger method and we did not encounter any groundwater within the depths explored on July 28, 2023.

To determine approximate regional groundwater levels in the area, we researched well logs available on the Oregon Water Resources Department (OWRD)[5] website for wells located within Section 22, Township 1 North, Range 1 East, Willamette Meridian. Our review indicated that groundwater levels in the area generally ranged from about 155 to 165 feet bgs. It should be noted groundwater levels vary with local topography. In addition, the groundwater levels reported on the OWRD logs often reflect the purpose of the well, so water well logs may only report deeper, confined groundwater, while geotechnical or environmental borings will often report any groundwater encountered, including shallow, unconfined groundwater. Therefore, the levels reported on the OWRD well logs referenced above are considered generally indicative of local water levels and may not reflect actual groundwater levels at the project site. We anticipate that groundwater levels will fluctuate due to seasonal and annual variations in precipitation, changes in site utilization, or other factors

[5] Oregon Water Resources Department, 2023. Well Log Records, *accessed June 2023*, from OWRD web site: http://apps.wrd.state.or.us/apps/gw/well_log/.

In addition to reviewing well logs, we also reviewed the Portland depth to groundwater mapping[6] which indicated groundwater is present at depths of 145 feet bgs in the vicinity of the site. It should be noted that the levels reported by the referenced map are average values for a given location and incorporate a degree of uncertainty. For this location the uncertainty is described as "moderate."

3.0 SEISMIC CONSIDERATIONS

3.1 Seismic Design

Section 1613.2.2 of the 2022 Oregon Structural Specialty Code (2022 OSSC) requires that the determination of the seismic site class be in accordance with Chapter 20 of the American Society of Civil Engineers Minimum Design Loads for Buildings and Other Structures (ASCE 7-16). We have assigned the site as Site Class D ("Stiff Soil") based on geologic mapping and subsurface conditions encountered during our investigation.

Earthquake ground motion parameters for the site were obtained in accordance with the 2022 OSSC using the Seismic Hazards by Location calculator on the ATC website[7]. The site Latitude 45.558812° North and Longitude 122.667371° West were input as the site location. The following table shows the recommended seismic design parameters for the site.

Table 1 Seismic Ground Motion Values

Parameter		Value
Mapped Acceleration Parameters	Spectral Acceleration, 0.2 second (S_s)	0.870g
	Spectral Acceleration, 1.0 second (S_1)	0.390g
Coefficients (Site Class D)	Site Coefficient, 0.2 second (F_A)	1.152
	Site Coefficient, 1.0 second (F_V)[1]	1.910
Adjusted MCE Spectral Response Parameters	MCE Spectral Acceleration, 0.2 second (S_{MS})	1.002g
	MCE Spectral Acceleration, 1.0 second (S_{M1})	0.745g
Design Spectral Response Accelerations	Design Spectral Acceleration, 0.2 second (S_{DS})	0.668g
	Design Spectral Acceleration, 1.0 second (S_{D1})	0.497g
Seismic Design Category (Risk Category II)		D

[1] Value determined from 2022 OSSC Table 1613.2.3(2).

3.2 Seismic Hazards

3.2.1 Liquefaction

In general, liquefaction occurs when deposits of loose/soft, saturated, cohesionless soils, generally sands and silts, are subjected to strong earthquake shaking. If these deposits cannot drain quickly enough, pore water pressures can increase, approaching the value of the overburden pressure. The shear strength of a cohesionless soil is directly proportional to the effective stress, which is equal to the difference between the overburden pressure and the pore water pressure. When the pore water pressure increases to the value of

[6] Snyder, D.T., 2008, Estimated depth to ground water and configuration of the water table in the Portland, Oregon area: U.S. Geological Survey, Scientific Investigations Report SIR-2008-5059, scale 1:60,000.

[7] Applied Technology Council (ATC), 2023. USGS seismic design parameters determined using "Seismic Hazards by Location," *accessed July 2023*, from the ATC website https://hazards.atcouncil.org/.

the overburden pressure, the shear strength of the soil approaches zero, and the soil can liquefy. The liquefied soils can undergo rapid consolidation or, if unconfined, can flow as a liquid. Structures supported by the liquefied soils can experience rapid, excessive settlement, shearing, or even catastrophic failure.

For fine-grained soils, susceptibility to liquefaction is evaluated based on penetration resistance and plasticity, among other characteristics. Criteria for identifying non-liquefiable, fine-grained soils are constantly evolving. Current practice to identify non-liquefiable, fine-grained soils is based on moisture content and plasticity characteristics of the soils[8,9,10]. The susceptibility of sands, gravels, and sand-gravel mixtures to liquefaction is typically assessed based on penetration resistance, as measured using SPTs, CPTs, or Becker Hammer Penetration tests (BPTs).

Based on the lack of saturated conditions, static groundwater, etc., the soils encountered within our explorations are considered non-liquefiable. Based on review of geologic mapping and our previous experience in the area, we do not anticipate liquefiable conditions are present at depths below those explored as part of this assignment. This judgment is supported by the Oregon Department of Geology and Mineral Industries' Oregon Statewide Geohazards Viewer (HazVu)[11] ,which shows a *low* hazard for liquefaction at the site. In addition, the Oregon Hazard Explorer for Lifelines Program (O-HELP)[12] shows a *very low* hazard for liquefaction for the site or immediate vicinity due to a M9.0 Cascadia Subduction Zone earthquake.

3.2.2 Slope Instability

Due to the relatively level topography at and surrounding the site, the risk of slope instability at the site is considered negligible. The proposed grading includes relatively minimal planned changes in site grades and is not anticipated to significantly increase this risk.

3.2.3 Surface Rupture

3.2.3.1 Faulting

Although the site is situated in a region of the country with known active faults and historic seismic activity, no known faults exist on or immediately adjacent to the site. Therefore, the risk of surface rupture at the site due to faulting is considered low.

3.2.3.2 Lateral Spread

Surface rupture due to lateral spread can occur on sites underlain by liquefiable soils that are located on or immediately adjacent to slopes steeper than about 3 degrees (20H:1V), and/or adjacent to a free face, such as a stream bank or the shore of an open body of water. During lateral spread, the materials overlying the liquefied soils are subject to lateral movement downslope or toward the free face. Based on the relatively

---

8 Seed, R.B. et al., 2003. Recent Advances in Soil Liquefaction Engineering: A Unified and Consistent Framework. Earthquake Engineering Research Center Report No. EERC 2003-06.

9 Bray, Jonathan D., Sancio, Rodolfo B., et al., 2006. Liquefaction Susceptibility of Fine-Grained Soils, Journal of Geotechnical and Geoenvironmental Engineering, Volume 132, Issue 9, September 2006.

10 Idriss, I.M., Boulanger, R.W., 2008. Soil Liquefaction During Earthquakes, Earthquakes Engineering Research Institute Monograph MNO-12.

11 Oregon Department of Geology and Mineral Industries, 2023. Oregon Statewide Geohazards Viewer, *accessed June 2023*, from DOGAMI web site: http://www.oregongeology.org/sub/hazvu/index.htm.

12 Oregon State University College of Engineering, 2023. Oregon Hazard Explorer for Lifelines Program (O-HELP), *accessed June 2023*, from O-HELP web site: http://ohelp.oregonstate.edu/#&ui-state=dialog.

level topography at the site and the non-liquefiable nature of the soils, the risk of damage associated with lateral spread is negligible.

4.0 CONCLUSIONS

Based on the results of our field explorations and analyses, the proposed project may be constructed as described in Section 1.1 of this report, provided the recommendations presented later in this report are incorporated into the design and development. We conclude the primary geotechnical considerations for this site include:

- The presence of relatively deep, undocumented fill materials encountered within borings B-3 and B-5.
- The presence of near-surface, moisture sensitive soils that are susceptible to disturbance during wet weather.

These considerations are described in more detail in the following sections.

4.1 Undocumented Fills

As indicated above and shown on the respective boring logs, we encountered about 11 and 12 feet of undocumented fill materials within borings B-3 and B-5, respectively. The undocumented fill materials encountered within the borings were highly variable in terms of relative consistency/density. To the best of our knowledge, there are no records detailing the original placement and compaction of those fill materials. As part of this assignment, we reviewed a report titled "Phase II Environmental Site Assessment Strong Properties", prepared by Parametrix and dated August 20, 2019. In that report, Parametrix reported encountering construction debris (brick, concrete) during environmental soil sampling during a previous site investigation. In addition, Parametrix reported that the project site was formerly occupied by buildings that contained full basements. We interpret that the relatively deep undocumented fills encountered in borings B-3 and B-5 consist of backfill placed within excavations related to the demolition and backfilling of those former basements, as illustrated on the attached Site Plan, Figure 2. Additional earthwork records could be sought to confirm this assumption is correct, if desired.

Due to the lack of documentation, the variable relative compaction/density of the fill materials, and the potential for excessive, total and differential settlements from proposed loads associated with the planned structures, we do <u>not</u> recommend the existing fill materials be relied upon for subgrade support of shallow foundations, floor slabs, or pavements. Where encountered at design subgrade elevations for those features, we recommend the existing fill materials be over-excavated[13] and replaced with structural fill. Subject to environmental review (by others, where applicable), the existing fill materials may be re-used as structural fill at the site, provided they are moisture-conditioned (as necessary) and compacted in conformance with the recommendations presented later in this report.

Supplemental geotechnical explorations (test pits) are recommended to refine the extent of the inferred basement backfills at this site for use in general earthwork planning and cost estimating purposes. Such

[13] As an alternative to full over-excavation and replacement, the existing fill materials could be improved (densified) in place by pursuing deep ground improvement (e.g. granular piers, deep soil mixing, etc.). Deep ground improvement systems are designed and installed by design-build firms specialized in those techniques. In the event that deep ground improvement is to be considered, the geotechnical engineer should be consulted to provide supplemental recommendations. In addition, the project environmental engineer should be consulted to review the concept of leaving those fill soils in place below buildings and/or pavement areas from the environmental perspective.

supplemental explorations are beyond the scope of this current assignment, but can be performed, upon request, for an additional fee.

4.2 Subgrade Moisture Sensitivity

The near surface silty soils (ML, SM) are susceptible to disturbance during wet weather. Trafficability of these soils may be difficult, and significant damage to the subgrade could occur, if earthwork is undertaken without proper precautions at times when the exposed soils are more than a few percentage points above optimum moisture content. In the event that construction occurs during wet weather, CGT recommends that measures be implemented to protect the fine-grained subgrade in areas of repeated construction traffic and within footing excavations. Geotechnical recommendations for wet weather construction are presented in Section 5.3 of this report.

5.0 RECOMMENDATIONS

The recommendations presented in this report are based on the information provided to us, results of our field investigation and analyses, laboratory data, and professional judgment. CGT has observed only a small portion of the pertinent subsurface conditions. The recommendations are based on the assumptions that the subsurface conditions do not deviate appreciably from those found during the field investigation. CGT should be consulted for further recommendations if the design of the proposed development changes and/or variations or undesirable geotechnical conditions are encountered during site development.

5.1 Site Preparation

5.1.1 Demolition

Demolition of existing buildings and appurtenant structures should include complete removal of all structural elements, including foundations and concrete slabs. Abandoned buried utilities should similarly be removed or grouted full. Concrete or asphalt concrete debris resulting from demolition activities may be re-used as structural fill, provided it is processed in accordance with the recommendations presented in Section 5.4.1 of this report. Alternatively, demolition debris should be hauled off site for disposal.

5.1.2 Stripping

Existing vegetation, topsoil (OL), and rooted fill soils (OL Fill) should be removed from within, and for a minimum 5-foot margin around, proposed building pad, structural fill, and pavement areas. Based on the results of our field explorations, topsoil stripping depths are anticipated to be about ¼ to ½ foot bgs. These materials may be deeper or shallower at locations away from the completed explorations. The geotechnical engineer's representative should provide recommendations for actual stripping depths based on observations during site stripping. Stripped surface vegetation and rooted soils should be transported off-site for disposal, or stockpiled for later use in landscaped areas.

5.1.3 Grubbing

Grubbing of trees should include the removal of the root mass and roots greater than ½ inch in diameter. Grubbed materials should be transported off-site for disposal. Root masses from larger trees may extend greater than 3 feet bgs. Where root masses are removed, the resulting excavation should be properly backfilled with structural fill in conformance with Section 5.4 of this report.

5.1.4 Over Excavation of Existing Deep Fills

Please refer to Figure 2 for an illustration showing the exploration locations and depths of fill encountered. Undocumented fill soils (SP Fill, ML Fill, CL Fill) should be removed from within, and for a minimum 5-foot margin around (where feasible), proposed building pad, structural fill, and pavement areas. Undocumented fills encountered in borings B-3 and B-5 extended to depths of about 11 and 12 feet bgs, respectively. These materials may be deeper or shallower at locations away from the completed explorations. Stripped, inorganic fill materials should be transported off-site for disposal, or may be stockpiled for later use as structural fill as described in Section 5.4.1 of this report.

5.1.5 Existing Utilities & Below-Grade Structures

All existing utilities at the site should be identified prior to excavation. Abandoned utility lines beneath the new building, pavements, and hardscaping features should be completely removed or grouted full. Soft, loose, or otherwise unsuitable soils encountered in utility trench excavations should be removed and replaced with structural fill in conformance with Section 5.4 this report. Buried structures (i.e. footings, foundation walls, retaining walls, slabs-on-grade, tanks, etc.), if encountered during site development, should be completely removed and replaced with structural fill in conformance with Section 5.4 of this report.

5.1.6 Subgrade Preparation – Building Pad & Pavements

After site preparation as recommended above, but prior to placement of structural fill and/or aggregate base, the geotechnical engineer's representative should observe the exposed subgrade soils in order to identify areas of excessive yielding through either proof rolling or probing. Proof rolling of subgrade soils is typically conducted during dry weather using a fully-loaded, 10- to 12-cubic-yard, tandem-axle, tire-mounted, dump truck or equivalent weighted water truck. Areas of limited access or that appear too soft or wet to support proof rolling equipment should be evaluated by probing. During wet weather, subgrade preparation should be performed in general accordance with the recommendations presented in Section 5.3 of this report. If areas of soft soil or excessive yielding are identified, the affected material should be over-excavated to firm, unyielding subgrade, and replaced with imported granular structural fill in conformance with Section 5.4.2 of this report.

5.1.7 Erosion Control

Erosion and sedimentation control measures should be employed in accordance with applicable City, County, and State regulations.

5.2 Temporary Excavations

5.2.1 Overview

Conventional earthmoving equipment in proper working condition should be capable of making necessary excavations for the anticipated site cuts as described earlier in this report. All excavations should be in accordance with applicable OSHA and state regulations. It is the contractor's responsibility to select the excavation methods, to monitor site excavations for safety, and to provide any shoring required to protect personnel and adjacent improvements. A "competent person," as defined by OR-OSHA, should be on-site during construction in accordance with regulations presented by OR-OSHA. CGT's current role on the project does not include review or oversight of excavation safety.

5.2.2 OSHA Soil Type

For use in the planning and construction of temporary excavations up to 15 feet in depth, an OSHA soil type "C" should be used for the existing fill materials and native predominantly sandy soils (ML, SP, SM) encountered in the borings.

5.2.3 Utility Trenches

Temporary trench cuts should stand near vertical to depths of approximately 4 feet in the native, silty and sandy soils (ML, SP, SM) encountered near the surface of the site. If groundwater seepage undermines the stability of the trench, or if sidewall caving is observed during excavation, the sidewalls should be flattened or shored. Depending on the time of year trench excavations occur, trench dewatering may be required in order to maintain dry working conditions. If groundwater is encountered, we recommend placing trench stabilization material at the base of the excavations. Trench stabilization material should be in conformance with Section 5.4.3.

5.2.4 Excavations Near Foundations

Excavations near footings should not extend within a 1 horizontal to 1 vertical (1H:1V) plane projected out and down from the outside, bottom edge of the footings. In the event excavation needs to extend below the referenced plane, temporary shoring of the excavation and/or underpinning of the subject footing may be required. The geotechnical engineer should be consulted to review proposed excavation plans for this design case to provide specific recommendations.

5.3 Wet Weather Considerations

For planning purposes, the wet season should be considered to extend from late September to late June. It is our experience that dry weather working conditions should prevail between early July and mid-September. Notwithstanding the above, soil conditions should be evaluated in the field by the geotechnical engineer's representative at the initial stage of site preparation to determine whether the recommendations within this section should be incorporated into construction.

5.3.1 Overview

Due to their fines content, the on-site silty soils (ML, SM) are susceptible to disturbance during wet weather. Trafficability of these soils may be difficult, and significant damage to subgrade soils could occur, if earthwork is undertaken without proper precautions at times when the exposed soils are more than a few percentage points above optimum moisture content. For wet weather construction, site preparation activities may need to be accomplished using track-mounted equipment, loading removed material onto trucks supported on granular haul roads, or other methods to limit soil disturbance. The geotechnical engineer's representative should evaluate the subgrade during excavation by probing rather than proof rolling. Soils that have been disturbed during site preparation activities, or soft or loose areas identified during probing, should be over-excavated to firm, unyielding subgrade, and replaced with imported granular structural fill in conformance with Section 5.4.2.

5.3.2 Geotextile Separation Fabric

We recommend a geotextile separation fabric be placed to serve as a barrier between the prepared subgrade and granular fill/base rock in areas of repeated or heavy construction traffic. The geotextile fabric

should meet the requirements presented in the current Oregon Department of Transportation (ODOT) Standard Specification for Construction (ODOT SSC), Section 02320.

5.3.3 Granular Working Surfaces (Haul Roads & Staging Areas)

Haul roads subjected to repeated heavy, tire-mounted, construction traffic (e.g. dump trucks, concrete trucks, etc.) will require a minimum of 18 inches of imported granular material. For light staging areas, 12 inches of imported granular material is typically sufficient. Additional granular material or geo-grid reinforcement may be recommended based on site conditions and/or loading at the time of construction. The imported granular material should be in conformance with Section 5.4.2 and have less than 5 percent material passing the U.S. Standard No. 200 Sieve. The prepared subgrade should be covered with geotextile fabric (Section 5.3.2) prior to placement of the imported granular material. The imported granular material should be placed in a single lift (up to 24 inches deep) and compacted using a smooth-drum, non-vibratory roller until well-keyed.

5.3.4 Footing Subgrade Protection

A minimum of 3 inches of imported granular material is recommended to protect fine-grained (silty), footing subgrades from foot traffic during inclement weather. The imported granular material should be in conformance with Section 5.4.2. The maximum particle size should be limited to 1 inch. The imported granular material should be placed in one lift over the prepared, undisturbed subgrade, and compacted using non-vibratory equipment until well keyed.

Surface water should not be allowed to collect in footing excavations. The excavations should be draped and/or provided with sumps to preclude water accumulation during inclement weather.

5.4 Structural Fill

The geotechnical engineer should be provided the opportunity to review all materials considered for use as structural fill (prior to placement). Samples of the proposed fill materials should be submitted to the geotechnical engineer a minimum of 5 business days prior their use on site[14]. The geotechnical engineer's representative should be contacted to evaluate compaction of structural fill as the material is being placed. Evaluation of compaction may take the form of in-place density tests and/or proof roll tests with suitable equipment. Structural fill should be evaluated at intervals not exceeding every 2 vertical feet as the fill is being placed.

5.4.1 On-Site Soils – General Use

In addition to the project geotechnical engineer, re-use of on-site soils to serve as structural fill should be reviewed by the project environmental consultant. The recommendations that follow assume the soils are suitable for re-use from the environmental perspective.

5.4.1.1 Fine-Grained (Silty, Clayey) Soils (ML Fill, CL Fill, ML, SM)

Re-use of these soils as structural fill may be difficult because these soils are sensitive to small changes in moisture content and are difficult, if not impossible, to adequately compact during wet weather. We anticipate the moisture content of these soils will be higher than the optimum moisture content for satisfactory compaction. Therefore, moisture conditioning (drying) should be expected in order to achieve adequate compaction. If used as structural fill, these soils should be free of organic matter, debris, and particles larger

[14] Laboratory testing for moisture density relationship (Proctor) is required. Tests for gradation may be required.

than 4 inches. When used as structural fill, these soils should be placed in lifts with a maximum pre-compaction thickness of about 8 inches at moisture contents within –1 and +3 percent of optimum, and compacted to not less than 92 percent of the material's maximum dry density, as determined in general accordance with ASTM D1557 (Modified Proctor).

5.4.1.2 Poorly Graded Sandy Soils (SP, SP Fill)

Re-use of the on-site, relatively clean, sandy soils as structural fill is feasible, provided the materials are kept clean of organics, debris, and particles larger than 4 inches in diameter. If reused as structural fill, these materials should be prepared in general accordance with Section 5.4.2.

If the on-site materials cannot be properly moisture-conditioned and/or processed, we recommend using imported granular material for structural fill.

5.4.2 Imported Granular Structural Fill – General Use

Imported granular structural fill should consist of angular pit or quarry run rock, crushed rock, or crushed gravel that is fairly well graded between coarse and fine particle sizes. The granular fill should contain no organic matter, debris, or particles larger than 4 inches, and have less than 5 percent material passing the U.S. Standard No. 200 Sieve. For fine-grading purposes, the maximum particle size should be limited to 1½ inches. The percentage of fines can be increased to 12 percent of the material passing the U.S. Standard No. 200 Sieve if placed during dry weather, and provided the fill material is moisture-conditioned, as necessary, for proper compaction. Imported granular fill material should be placed in lifts with a maximum thickness of about 12 inches, and compacted to not less than 95 percent of the material's maximum dry density, as determined in general accordance with ASTM D1557 (Modified Proctor). Proper moisture conditioning and the use of vibratory equipment will facilitate compaction of these materials.

Granular fill materials with high percentages of particle sizes in excess of 1½ inches are considered non-moisture-density testable materials. As an alternative to conventional density testing, compaction of these materials should be evaluated by proof roll test observation (deflection tests), where accepted by the geotechnical engineer.

5.4.3 Trench Base Stabilization Material

If groundwater is present at the base of utility excavations, trench base stabilization material should be placed. Trench base stabilization material should consist of a minimum of 1 foot of well-graded granular material with a maximum particle size of 4 inches and less than 5 percent material passing the U.S. Standard No. 4 Sieve. The material should be free of organic matter and other deleterious material, placed in one lift, and compacted until well-keyed.

5.4.4 Trench Backfill Material

Trench backfill for the utility pipe base and pipe zone should consist of granular material as recommended by the utility pipe manufacturer. Trench backfill above the pipe zone should consist of well-graded granular material containing no organic matter or debris, have a maximum particle size of ¾ inch, and have less than 8 percent material passing the U.S. Standard No. 200 Sieve. As a guideline, trench backfill should be placed in maximum 12-inch-thick lifts. The earthwork contractor may elect to use alternative lift thicknesses based on their experience with specific equipment and fill material conditions during construction in order to achieve

the required compaction. The following table presents recommended relative compaction percentages for utility trench backfill.

Table 2 Utility Trench Backfill Compaction Recommendations

Backfill Zone	Recommended Minimum Relative Compaction	
	Structural Areas[1,2]	Landscaping Areas
Pipe Base and Within Pipe Zone	90% ASTM D1557 or pipe manufacturer's recommendation	85% ASTM D1557 or pipe manufacturer's recommendation
Above Pipe Zone	92% ASTM D1557	88% ASTM D1557
Within 3 Feet of Design Subgrade	95% ASTM D1557	90% ASTM D1557

1 Includes proposed building, pavement areas, structural fill areas, exterior hardscaping, etc.
2 Or as specified by the local jurisdiction where located in the public right of way.

5.4.5 Controlled Low-Strength Material (CLSM)

CLSM is a self-compacting, cementitious material that is typically considered when backfilling localized areas. CLSM is sometimes referred to as "controlled density fill" or CDF. Due to its flowable characteristics, CLSM typically can be placed in restricted-access excavations where placing and compacting fill is difficult. If chosen for use at this site, we recommend the CLSM be in conformance with Section 00442 of the most recent, ODOT SSC. The geotechnical engineer's representative should observe placement of the CLSM and obtain samples for compression testing in accordance with ASTM D4832. As a guideline, for each day's placement, two compressive strength specimens from the same CLSM sample should be tested. The results of the two individual compressive strength tests should be averaged to obtain the reported 28-day compressive strength. If CLSM is considered for use on this site, please contact the geotechnical engineer for site-specific and application-specific recommendations.

5.5 Shallow Foundations

The recommendations that follow assume that the existing relatively deep undocumented fill soils, as described earlier in this report, will be over-excavated and replaced with structural fill in conformance with Section 4.0 of this report. In the event that deep ground improvement (e.g. granular piers, deep soil mixing, etc.) will be used to remedy those fill materials and shallow foundations will derive subgrade support from improved ground, the geotechnical engineer should be consulted to provide supplemental recommendations.

5.5.1 Subgrade Preparation

Satisfactory subgrade support for shallow foundations can be obtained from the native, medium stiff to better silty soils (ML), the native, medium dense to better poorly graded sandy soils (SM, SP), or new structural fill that is properly placed and compacted on these materials during construction. The geotechnical engineer's representative should be contacted to observe subgrade conditions prior to placement of forms, reinforcement steel, or granular backfill (if required). If soft, loose, or otherwise unsuitable soils are encountered, they should be over-excavated as recommended by the geotechnical representative at the time of construction. The resulting over-excavation should be brought back to grade with imported granular structural fill in conformance with Section 5.4.2. The maximum particle size of over-excavation backfill should be limited to 1½ inches. All granular pads for footings should be constructed a minimum of 6 inches wider on each side of the footing for every vertical foot of over-excavation.

5.5.2 Minimum Footing Width & Embedment

Minimum footing widths should be in conformance with the current OSSC. As a guideline, CGT recommends individual spread footings have a minimum width of 24 inches. For three plus story structures, we recommend continuous wall footings have a minimum width of 18 inches. All footings should be founded at least 18 inches below the lowest, permanent adjacent grade to develop lateral capacity and for frost protection.

5.5.3 Bearing Pressure & Settlement

Footings founded as recommended above should be proportioned for a maximum allowable soil bearing pressure of 2,500 pounds per square foot (psf). This bearing pressure is a net bearing pressure, applies to the total of dead and long-term live loads, and may be increased by one-third when considering seismic or wind loads. For foundations founded as recommended above, total settlement of foundations is anticipated to be less than 1 inch. Differential settlements between adjacent columns and/or bearing walls should not exceed ½ inch. If an increased allowable soil bearing pressure is desired, the geotechnical engineer should be consulted.

5.5.4 Lateral Capacity

A maximum passive (equivalent fluid) earth pressure of 150 pounds per cubic foot (pcf) is recommended for design of footings cast neat into excavations in suitable native soil or confined by granular structural fill that is properly placed and compacted during construction. The recommended earth pressure was computed using a factor of safety of 1½, which is appropriate due to the amount of movement required to develop full passive resistance. In order to develop the above capacity, the following should be understood:

1. Concrete must be poured neat in excavations or the foundations must be backfilled with imported granular structural fill,
2. The adjacent grade must be level,
3. The static ground water level must remain below the base of the footings throughout the year.
4. Adjacent floor slabs, pavements, or the upper 12-inch-depth of adjacent, unpaved areas should not be considered when calculating passive resistance.

An ultimate coefficient of friction equal to 0.35 may be used when calculating resistance to sliding for footings founded on the native soils described above. An ultimate coefficient of friction equal to 0.45 may be used when calculating resistance to sliding for footings founded on a minimum of 6 inches of imported granular structural fill (crushed rock) that is properly placed and compacted during construction.

5.5.5 Subsurface Drainage

Recognizing the presence of near-surface fine-grained (silty) soils encountered at this site, we recommend placing foundation drains at the exterior, base elevations of perimeter continuous wall footings. Foundation drains should consist of a minimum 4-inch diameter, perforated, PVC drainpipe wrapped with a non-woven geotextile filter fabric. The drains should be backfilled with a minimum of 2 cubic feet of open graded drain rock per lineal foot of pipe. The drain rock should also be encased in a geotextile fabric in order to provide separation from the surrounding fine-grained soils. Foundation drains should be positively sloped and should outlet to a suitable discharge point. The geotechnical engineer's representative should observe the drains prior to backfilling. Roof drains should not be tied into foundation drains.

5.6 Rigid Retaining Walls

5.6.1 Footings

Retaining wall footings should be designed and constructed in conformance with the recommendations presented in Section 5.5, as applicable.

5.6.2 Wall Drains

We recommend placing retaining wall drains at the base elevation of the heel of retaining wall footings. Retaining wall drains should consist of a minimum 4-inch-diameter, perforated, HDPE (High Density Polyethylene) drainpipe wrapped with a non-woven geotextile filter fabric. The drains should be backfilled with a minimum of 2 cubic feet of open graded drain rock per lineal foot of pipe. The drain rock should be encased in a geotextile fabric in order to provide separation from the surrounding soils. Retaining wall drains should be positively sloped and should outlet to a suitable discharge point. The geotechnical engineer's representative should be contacted to observe the drains prior to backfilling. Roof or area drains should not be tied into retaining wall drains.

5.6.3 Wall Backfill

Retaining walls should be backfilled with imported granular structural fill in conformance with Section 5.4.2 and contain less than 5 percent passing the U.S. Standard No. 200 Sieve. The backfill should be compacted to a minimum of 90 percent of the material's maximum dry density as determined in general accordance with ASTM D1557 (Modified Proctor). When placing fill behind walls, care must be taken to minimize undue lateral loads on the walls. Heavy compaction equipment should be kept at least "H" feet from the back of the walls, where "H" is the height of the wall. Light mechanical or hand tamping equipment should be used for compaction of backfill materials within "H" feet of the back of the walls.

5.6.4 Design Parameters & Limitations

For rigid retaining walls founded, backfilled, and drained as recommended above, the following table presents parameters recommended for design.

Table 3 Design Parameters for Rigid Retaining Walls

Retaining Wall Condition	Modeled Backfill Condition	Static Equivalent Fluid Pressure (S_A)[1]	Seismic Equivalent Fluid Pressure (S_{AE})[1,2]	Surcharge from Uniform Load, q, Acting on Backfill Behind Retaining Wall
Not Restrained from Rotation	Level (i=0)	28 pcf	39 pcf	0.22*q
Restrained from Rotation	Level (i=0)	50 pcf	53 pcf	0.38*q

[1] Refer to the attached Figure 4 for a graphical representation of static and seismic loading conditions. Seismic resultant force acts at 0.6H above the base of the wall.

[2] Seismic (dynamic) lateral loads were computed using the Mononobe-Okabe Equation as presented in the 1997 Federal Highway Administration (FHWA) design manual. Static and seismic equivalent fluid pressures are not additive.

The above design recommendations are based on the assumptions that:

- The walls consist of concrete cantilevered retaining walls (β = 0 and δ = 24 degrees, see Figure 4).
- The walls are 10 feet or less in height.
- The backfill is drained and consists of imported granular structural fill (ϕ = 38 degrees).
- No point, line, or strip load surcharges are imposed behind the walls.
- The grade behind the wall is level, or sloping down and away from the wall, for a distance of 10 feet or more from the wall.
- The grade in front of the walls is level or ascending for a distance of at least 5 feet from the wall.

Re-evaluation of our recommendations will be required if the retaining wall design criteria for the project vary from these assumptions.

5.6.5 Surcharge Loads

Where present, surcharges from adjacent site features (i.e. buildings, slabs, pavements, etc.) should be evaluated in design of retaining walls at the site. Methods for calculating lateral pressures on rigid retaining walls from strip, line, and vertical point loads are presented on the attached Figure 5.

5.7 Floor Slabs

5.7.1 Subgrade Preparation

Satisfactory subgrade support for slabs constructed on grade, supporting up to 200 psf area loading, can be obtained from the native, medium stiff to better silty soils (ML), the native, medium dense to better sandy soils (SP, SM), or new structural fill that is properly placed and compacted on these materials during construction. The geotechnical engineer's representative should observe floor slab subgrade soils to evaluate surface consistencies. If soft, loose, or otherwise unsuitable soils are encountered, they should be over-excavated as recommended by the CGT geotechnical representative at the time of construction. The resulting over-excavation should be brought back to grade with imported granular structural fill as described in Section 5.4.2.

5.7.1 Crushed Rock Base

Concrete floor slabs should be supported on a minimum 6-inch-thick layer of crushed rock (base rock).

5.7.1.1 Conventional Base Rock

Floor slab base rock should consist of well-graded granular material (crushed rock) containing no organic matter or debris, have a maximum particle size of ¾ inch, and have less than 5 percent material passing the U.S. Standard No. 200 Sieve. Floor slab base rock should be placed in one lift and compacted to not less than 95 percent of the material's maximum dry density as determined in general accordance with ASTM D1557 (Modified Proctor). We recommend "choking" the surface of the base rock with sand just prior to concrete placement. Choking means the voids between the largest aggregate particles are filled with sand, but does not provide a layer of sand above the base rock. Choking the base rock surface reduces the lateral restraint on the bottom of the concrete during curing. Choking the base rock also reduces punctures in vapor retarding membranes due to foot traffic where such membranes are used.

5.7.1.2 Gas Permeable Base Rock

Floor slab base rock in areas where radon gas mitigation is desired should consist of open-graded crushed rock containing no organic matter or debris, with all material passing through a 2-inch sieve and retained on the ¼-inch sieve, in accordance with Section 1812.2.1, Bullet 1, of the 2022 OSSC.

CGT recommends that a minimum 10-mil polyethylene sheeting or equivalent material with equal or greater tensile strength, resistance to puncture, resistance to deterioration, and resistance to water-vapor transmission be placed on top of the gas-permeable base rock to act as a soil-gas-retarder. Placement and installation of this sheeting should be in conformance with that indicated in Section 1812.2.2 of the 2022 OSSC.

The geotechnical engineer or their representative should be contacted to observe gas-permeable base rock conditions prior to placement of the soil-gas-retarder.

5.7.2 Design Considerations

For floor slabs constructed with a 6-inch thick base rock layer as recommended, an effective modulus of subgrade reaction of 150 pounds per cubic inch (pci) is recommended for the design of the floor slab. A higher effective modulus of subgrade reaction can be obtained by increasing the base rock thickness. Please contact the geotechnical engineer for additional recommendations if a higher modulus is desired. Floor slabs constructed as recommended will likely settle less than ½ inch. For general floor slab construction, slabs should be jointed around columns and walls to permit slabs and foundations to settle differentially.

5.7.3 Subgrade Moisture Considerations

Liquid moisture and moisture vapor should be expected at the subgrade surface. The recommended crushed rock base is anticipated to provide protection against liquid moisture. Where moisture vapor emission through the slab must be minimized, e.g. impervious floor coverings, storage of moisture sensitive materials directly on the slab surface, etc., a vapor retarding membrane or vapor barrier below the slab should be considered. Factors such as cost, special considerations for construction, floor coverings, and end use suggest that the decision regarding a vapor retarding membrane or vapor barrier be made by the architect and owner.

If a vapor retarder or vapor barrier is placed below the slab, its location should be based on current American Concrete Institute (ACI) guidelines, ACI 302 Guide for Concrete Floor and Slab Construction. In some cases, this indicates placement of concrete directly on the vapor retarder or barrier. Please note that the placement of concrete directly on impervious membranes increases the risk of plastic shrinkage cracking and slab curling in the concrete. Construction practices to reduce or eliminate such risk, as described in ACI 302, should be employed during concrete placement.

5.8 Pavements

5.8.1 Subgrade Preparation

Pavement subgrade preparation should be performed in general accordance with the recommendations presented in Section 5.1.6 above. Subgrade surfaces should be crowned (or sloped) for proper drainage in accordance with specifications provided by the project civil engineer.

5.8.2 Design Pavement Sections

Recommendations for design pavement sections were not included as part of this assignment, but can be provided, upon request, for an additional fee.

5.9 Additional Considerations

5.9.1 Drainage

Subsurface drains should be connected to the nearest storm drain, on-site infiltration system (to be designed by others) or other suitable discharge point. Paved surfaces and grading near or adjacent to the building should be sloped to drain away from the building. Surface water from paved surfaces and open spaces should be collected and routed to a suitable discharge point. Surface water should not be directed into foundation or retaining wall drains.

5.9.2 Expansive Potential

The near surface native soils consist of low to moderate plasticity silt and non-plastic sandy soils. Based on our experience with similar soils in the vicinity of the site, these soils are not considered to be susceptible to appreciable movements from changes in moisture content. Accordingly, no special considerations are required to mitigate expansive potential of the near surface soils at the site.

6.0 RECOMMENDED ADDITIONAL SERVICES

6.1 Design Review

Geotechnical design review is of paramount importance. We recommend the geotechnical design review take place prior to releasing bid packets to contractors.

6.2 Observation of Construction

Satisfactory earthwork, foundation, floor slab, and pavement performance depends to a large degree on the quality of construction. Sufficient observation of the contractor's activities is a key part of determining that the work is completed in accordance with the construction drawings and specifications. Subsurface conditions observed during construction should be compared with those encountered during subsurface explorations, and recognition of changed conditions often requires experience. We recommend that qualified personnel visit the site with sufficient frequency to detect whether subsurface conditions change significantly from those observed to date and anticipated in this report. We recommend geotechnical engineer's representative attend a pre-construction meeting coordinated by the contractor and/or developer. The project geotechnical engineer's representative should provide observations and/or testing of at least the following earthwork elements during construction:

- Site Stripping and Demolition
- Subgrade Preparation for Shallow Foundations, Retaining Walls, Structural Fills, Floor Slabs, and Pavements
- Compaction of Structural Fill, Retaining Wall Backfill, and Utility Trench Backfill
- Compaction of Base Rock for Floor Slabs and Pavements
- Compaction of Asphalt Concrete for Pavements

It is imperative that the owner and/or contractor request earthwork observations and testing at a frequency sufficient to allow the geotechnical engineer to provide a final letter of compliance for the earthwork activities.

7.0 LIMITATIONS

We have prepared this report for use by the owner/developer and other members of the design and construction team for the proposed development. The opinions and recommendations contained within this report are forwarded to assist in the planning and design process and are not intended to be, nor should they be construed as, a warranty of subsurface conditions.

We have made observations based on our explorations that indicate the soil conditions at only those specific locations and only to the depths penetrated. These observations do not necessarily reflect soil types, strata thickness, or water level variations that may exist between or away from our explorations. If subsurface conditions vary from those encountered in our site explorations, CGT should be alerted to the change in conditions so that we may provide additional geotechnical recommendations, if necessary. Observation by experienced geotechnical personnel should be considered an integral part of the construction process.

The owner/developer is responsible for ensuring that the project designers and contractors implement our recommendations. When the design has been finalized, prior to releasing bid packets to contractors, we recommend that the design drawings and specifications be reviewed by our firm to see that our recommendations have been interpreted and implemented as intended. If design changes are made, we request that we be retained to review our conclusions and recommendations and to provide a written modification or verification. Design review and construction phase testing and observation services are beyond the scope of our current assignment, but will be provided for an additional fee.

The scope of our services does not include services related to construction safety precautions, and our recommendations are not intended to direct the contractor's methods, techniques, sequences, or procedures, except as specifically described in our report for consideration in design.

Geotechnical engineering and the geologic sciences are characterized by a degree of uncertainty. Professional judgments presented in this report are based on our understanding of the proposed construction, familiarity with similar projects in the area, and on general experience. Within the limitations of scope, schedule, and budget, our services have been executed in accordance with the generally accepted practices in this area at the time this report was prepared; no warranty, expressed or implied, is made. This report is subject to review and should not be relied upon after a period of three years.

STRONG PROPERTY - PORTLAND, OREGON
Project Number G2305938

FIGURE 1
Site Location

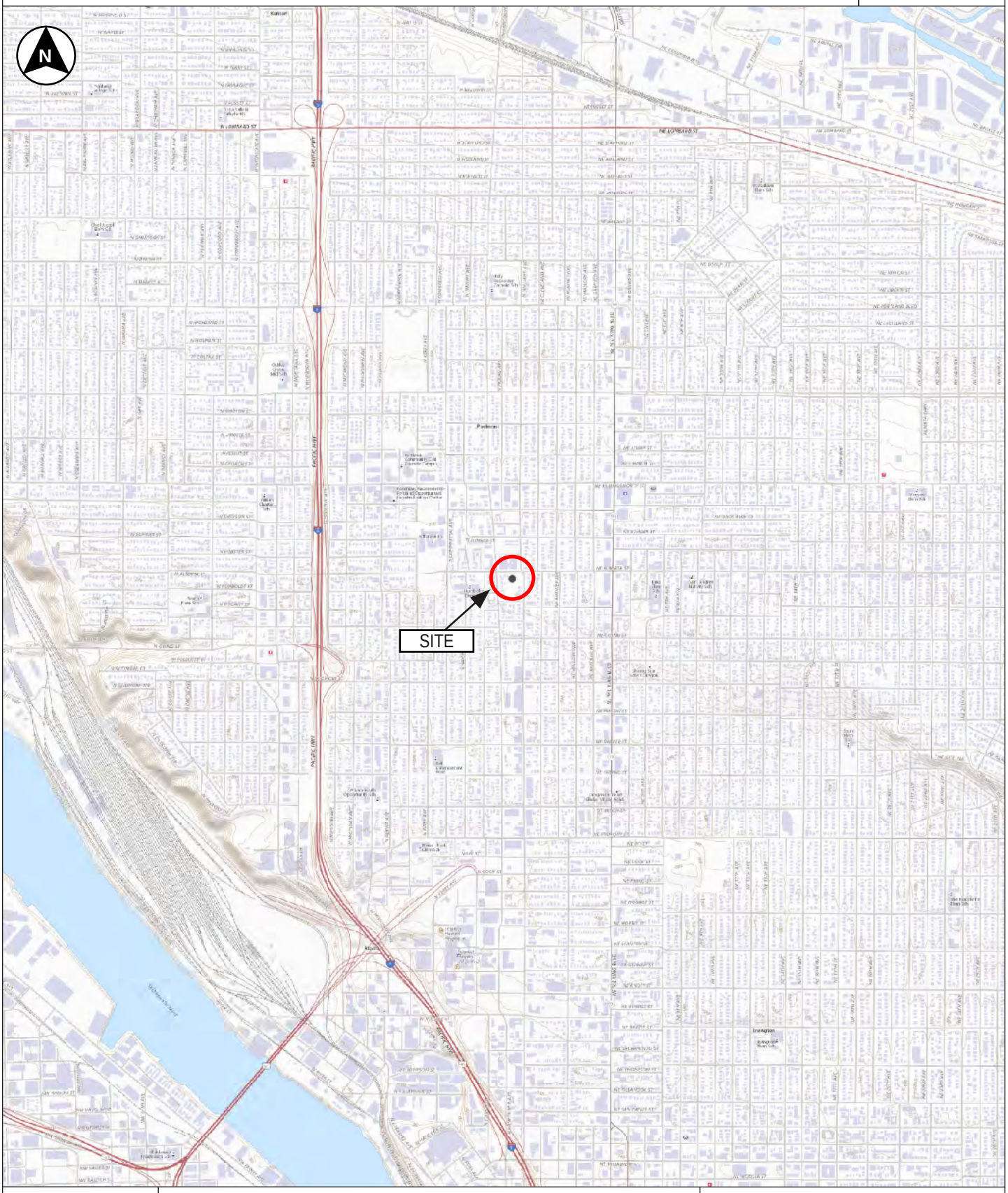

CARLSON CGT GEOTECHNICAL
503-601-8250
Drafted by: AET

USGS Topographic base map created with The National Map, 2023, at https://apps.nationalmap.gov/viewer/

Township 1 North, Range 1 East, Section 22, Willamette Meridian

Latitude: 45.558812° North
Longitude: 122.667371° West

1 Inch = 2,000 feet

0 2000 4000

LU 23-103655 DZ
Exhibit A8

STRONG PROPERTY - PORTLAND, OREGON
Project Number G2305938

Figure 2
Site Plan

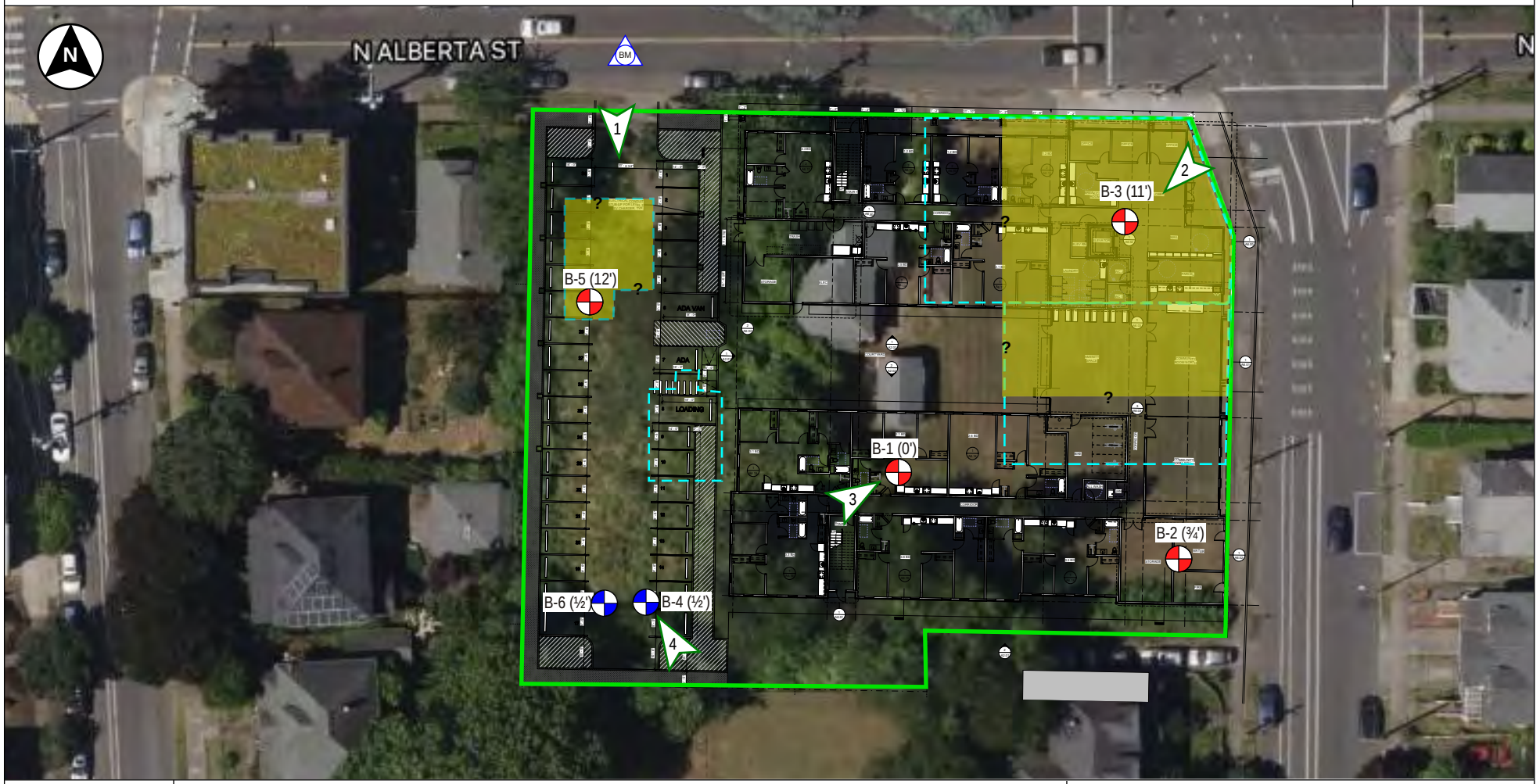

LEGEND

B-1 (') Hollow-stem auger boring. Depth of fill indicated in ().

B-6 (') Infiltration test boring. Depth of fill indicated in ().

BM Elevation benchmark - Assumed 100-foot elevation at the surface of N Alberta Street.

Property boundary

Approximate location of previous buildings with basements (see text for additional discussion)

Area of site inferred to be underlain by 10+ feet of undocumented fill (see text for additional discussion.)

1 Inch = 50 Feet

0 50 100

NOTES: 2022 aerial photograph from Satellites.Pro, https://satellites.pro/Portland_map.Oregon_region.USA. Building footprint from site plan produced by Parametrix, provided by client. Locations noted are approximate.

CARLSON CGT GEOTECHNICAL
503-601-8250
Drafted by: AET

LU 23-103655 DZ
Exhibit A8

Photograph 1

Photograph 2

Photograph 3

Photograph 4

CARLSON CGT GEOTECHNICAL
503-601-8250
Drafted by: AET

See Figure 2 for approximate photograph locations and directions. Photographs were taken at the time of our fieldwork.

ACTIVE LATERAL PRESSURE DISTRIBUTION

STATIC LOADING CONDITIONS

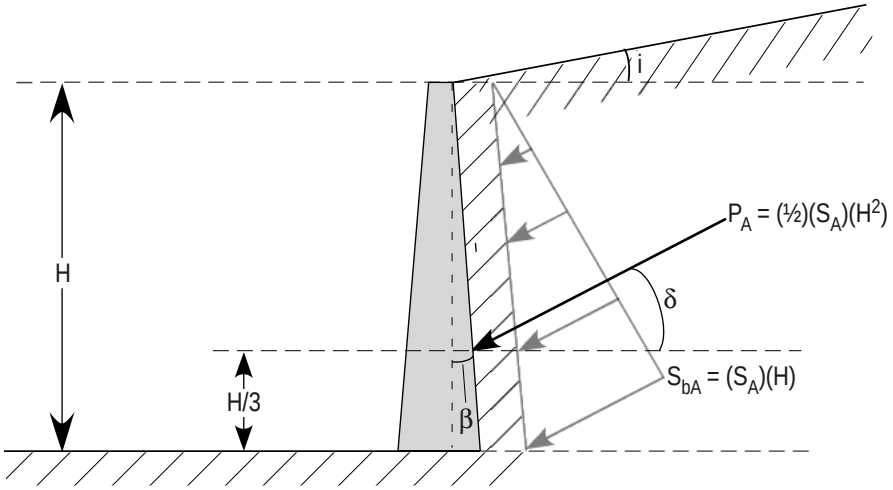

SEISMIC LOADING CONDITIONS

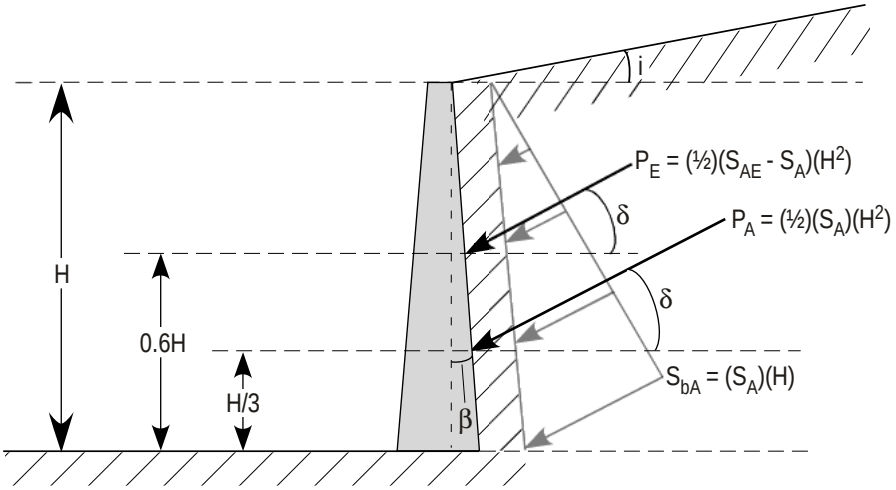

LEGEND

S_A = Active lateral equivalent fluid pressure (lb/ft^3)*

S_{bA} = Active lateral earth pressure (static) at the bottom of wall (lb/ft^3)

S_{AE} = Active total (static + seismic) equivalent fluid pressure (lb/ft^3)*

i = Slope of backfill, relative to horizontal (degrees)**

β = Slope of back of wall, relative to vertical (degrees)**

P_A = Static active thrust force acting at H/3 from bottom of retaining wall (lb/ft)

P_E = Dynamic active thrust force acting at 0.6H from bottom of retaining wall (lb/ft)

δ = Angle from normal of back of wall (degrees). Based on friction developing between wall and backfill**

*Refer to report text for calculated values **Refer to report text for modeled/assumed values

CARLSON CGT GEOTECHNICAL 503-601-8250

Notes

1. Uniform pressure distribution of seismic loading is based on empirical evaluations [Sherif et al, 1982 and Whitman, 1990].
2. Placement of seismic resultant force at 0.6H is based on wall behavior and model test results [Whitman, 1990].

STRIP LOAD PARALLEL TO WALL[1]

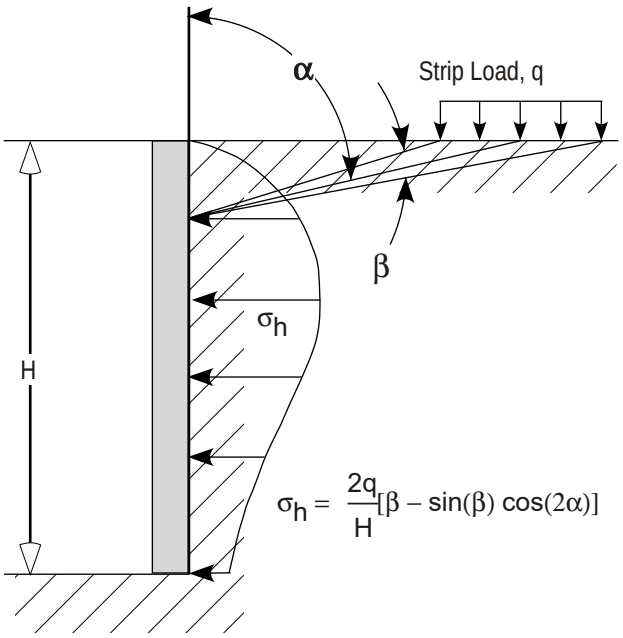

$$\sigma_h = \frac{2q}{H}[\beta - \sin(\beta)\cos(2\alpha)]$$

LINE LOAD PARALLEL TO WALL[2]

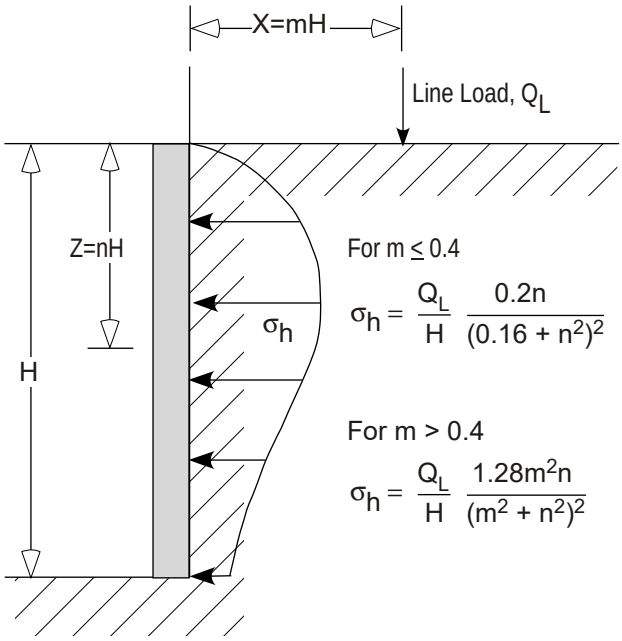

For $m \leq 0.4$

$$\sigma_h = \frac{Q_L}{H}\frac{0.2n}{(0.16 + n^2)^2}$$

For $m > 0.4$

$$\sigma_h = \frac{Q_L}{H}\frac{1.28m^2n}{(m^2 + n^2)^2}$$

VERTICAL POINT LOAD[2]

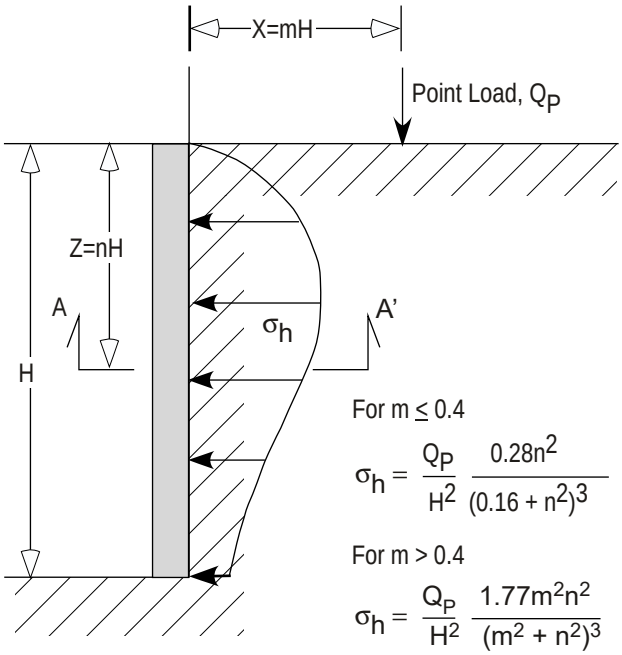

For $m \leq 0.4$

$$\sigma_h = \frac{Q_P}{H^2}\frac{0.28n^2}{(0.16 + n^2)^3}$$

For $m > 0.4$

$$\sigma_h = \frac{Q_P}{H^2}\frac{1.77m^2n^2}{(m^2 + n^2)^3}$$

Section A - A'

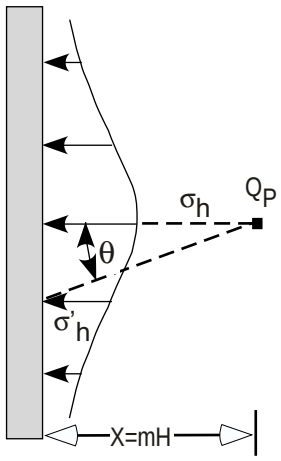

$$\sigma'_h = \sigma_h \cos^2(1.1\,\theta)$$

Notes: 1. Das, Principles of Geotechnical Engineering, 1990 Edition.
2. NAVFAC Design Manual 7.06.

Refer to the referenced design manuals for additional guidance. Contact CGT if there are any questions with modeling surcharge loads.

Carlson Geotechnical

A Division of Carlson Testing, Inc.
Phone: (503) 601-8250
www.carlsontesting.com

Bend Office	**(541) 330-9155**
Eugene Office	**(541) 345-0289**
Salem Office	**(503) 589-1252**
Tigard Office	**(503) 684-3460**

Appendix A: Subsurface Investigation and Laboratory Testing

Strong Property - North Portland
4931 North Williams Avenue
Portland, Oregon

CGT Project Number G2305938

August 7, 2023

Prepared For:

James Lee
Community Development Partners
126 NE Alberta Street, Suite 202
Portland, Oregon, 97211

Prepared by
Carlson Geotechnical

Exploration Key ..... Figure A1
Soil Classification ..... Figure A2
Exploration Logs ..... Figures A3 – A8

A.1.0 SUBSURFACE INVESTIGATION

Our field investigation consisted of six drilled borings completed on July 28, 2023. The exploration locations are shown on the Site Plan, attached to the geotechnical report as Figure 2. The exploration locations shown therein were determined based on measurements from existing site features (buildings, etc.) and are approximate. Surface elevations indicated on the logs were estimated based on a temporary benchmark (assumed 100-foot elevation at the surface of North Alberta Avenue) shown on the referenced Site Plan and are approximate. The attached figures detail the exploration methods (Figure A1), soil classification criteria (Figure A2), and present detailed logs of the explorations (Figures A3 through A8), as discussed below.

A.1.1 Drilled Borings

CGT observed the advancement of six drilled borings (B-1 through B-6) at the site using a 7822DT GeoProbe drill rig provided and operated by our subcontractor, Western States Soil Conservation of Hubbard, Oregon. The borings were advanced using the hollow-stem auger and mud rotary drilling techniques to depths ranging from approximately 6½ to 51½ feet bgs. Upon completion, the borings were backfilled with granular bentonite. Drilling wastes (cuttings and drilling fluids) were left onsite

A.1.2 In-Situ Testing

A.1.2.1 Standard Penetration Tests (SPTs)

SPTs were conducted within the borings using a split-spoon sampler in general accordance with ASTM D1586. The SPTs were conducted at 2½- to 10-foot intervals to the termination depths of the borings. The SPT is described on the attached Exploration Key, Figure A1.

A.1.2.2 Infiltration Tests

CGT performed two infiltration tests at the site, within the hollow-stem auger borings B-4 and B-6. Details regarding the test procedure and results of the tests are presented in Appendix B.

A.1.3 Material Classification & Sampling

Soil samples were obtained at selected intervals in the borings using the referenced split-spoon (SPT) sampler detailed on Figure A1. A qualified member of CGT's geological staff collected the samples and logged the soils in general accordance with the Visual-Manual Procedure (ASTM D2488). An explanation of this classification system is attached as Figure A2. The SPT samples were stored in sealable plastic bags and transported to our soils laboratory for further examination and testing. Our geological staff visually examined all samples in order to refine the initial field classifications.

A.1.4 Subsurface Conditions

Subsurface conditions are summarized in Section 2.3 of the geotechnical report. Detailed logs of the explorations are presented on the attached exploration logs, Figures A3 through A8.

A.2.0 LABORATORY TESTING

Laboratory testing was performed on samples collected in the field to refine our initial field classifications and determine in-situ parameters. Laboratory testing included the following:

- Thirteen moisture content determinations (ASTM D2216).
- Three percentage passing the U.S. Standard No. 200 Sieve tests (ASTM D1140).

Results of the laboratory tests are shown on the exploration logs.

STRONG PROPERTY - PORTLAND, OREGON *Project Number G2305938*	**FIGURE A1** **Exploration Key**

PL — LL MC	Atterberg limits (plasticity) test results (ASTM D4318): PL = Plastic Limit, LL = Liquid Limit, and MC= Moisture Content (ASTM D2216)
☐ FINES CONTENT (%)	Percentage passing the U.S. Standard No. 200 Sieve (ASTM D1140)

SAMPLING

GRAB	Grab sample
BULK	Bulk sample
SPT	**Standard Penetration Test** (SPT) consists of driving a 2-inch, outside-diameter, split-spoon sampler into the undisturbed formation with repeated blows of a 140-pound, hammer falling a vertical distance of 30 inches (ASTM D1586). The number of blows (N-value) required to drive the sampler the last 12 inches of an 18-inch sample interval is used to characterize the soil consistency or relative density. The drill rig was equipped with an cat-head or automatic hammer to conduct the SPTs. The observed N-values, hammer efficiency, and N_{60} are noted on the boring logs.
MC	**Modified California** sampling consists of 3-inch, outside-diameter, split-spoon sampler (ASTM G3550) driven similarly to the SPT sampling method described above. A sampler diameter correction factor of 0.44 is applied to calculate the equivalent SPT N_{60} value per Lacroix and Horn, 1973.
CORE	**Rock Coring** interval
SH	**Shelby Tube** is a 3-inch, inner-diameter, thin-walled, steel tube push sampler (ASTM D1587) used to collect relatively undisturbed samples of fine-grained soils.
WDCP	**Wildcat Dynamic Cone Penetrometer** (WDCP) test consists of driving 1.1-inch diameter, steel rods with a 1.4-inch diameter, cone tip into the ground using a 35-pound drop hammer with a 15-inch free-fall height. The number of blows required to drive the steel rods is recorded for each 10 centimeters (3.94 inches) of penetration. The blow count for each interval is then converted to the corresponding SPT N_{60} values.
DCP	**Dynamic Cone Penetrometer** (DCP) test consists of driving a 20-millimeter diameter, hardened steel cone on 16-millimeter diameter steel rods into the ground using a 10-kilogram drop hammer with a 460-millimeter free-fall height. The depth of penetration in millimeters is recorded for each drop of the hammer.
POCKET PEN. (tsf)	**Pocket Penetrometer** test is a hand-held instrument that provides an approximation of the unconfined compressive strength in tons per square foot (tsf) of cohesive, fine-grained soils.

CONTACTS

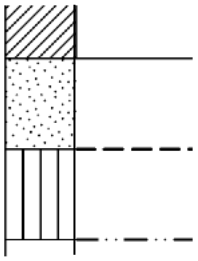

Observed (measured) contact between soil or rock units.

Inferred (approximate) contact between soil or rock units.

Transitional (gradational) contact between soil or rock units.

ADDITIONAL NOTATIONS

Italics	Notes drilling action or digging effort
{ Braces }	Interpretation of material origin/geologic formation (e.g. { Base Rock } or { Columbia River Basalt })

CARLSON CGT GEOTECHNICAL 503-601-8250

All measurements are approximate.

STRONG PROPERTY - PORTLAND, OREGON
Project Number G2305938

FIGURE A2
Soil Classification

Classification of Terms and Content

NAME: Group Name and Symbol
Relative Density or Consistency
Color
Moisture Content
Plasticity
Other Constituents
Other: Grain Shape, Approximate Gradation
Organics, Cement, Structure, Odor, etc.
Geologic Name or Formation

Grain Size

		U.S. Standard Sieve
Fines		<#200 (0.075 mm)
Sand	Fine	#200 - #40 (0.425 mm)
	Medium	#40 - #10 (2 mm)
	Coarse	#10 - #4 (4.75 mm)
Gravel	Fine	#4 - 0.75 inch
	Coarse	0.75 inch - 3 inches
Cobbles		3 to 12 inches
Boulders		> 12 inches

Coarse-Grained (Granular) Soils

Relative Density

SPT N_{60}-Value	Density
0 - 4	Very Loose
4 - 10	Loose
10 - 30	Medium Dense
30 - 50	Dense
>50	Very Dense

Minor Constituents

Percent by Volume	Descriptor	Example
0 - 5%	"Trace" as part of soil description	"trace silt"
5 - 15%	"With" as part of group name	"**POORLY GRADED SAND WITH SILT**"
15 - 49%	Modifier to group name	"**SILTY SAND**"

Fine-Grained (Cohesive) Soils

SPT N_{60}-Value	Torvane tsf Shear Strength	Pocket Pen tsf Unconfined	Consistency	Manual Penetration Test
<2	<0.13	<0.25	Very Soft	Thumb penetrates more than 1 inch
2 - 4	0.13 - 0.25	0.25 - 0.50	Soft	Thumb penetrates about 1 inch
4 - 8	0.25 - 0.50	0.50 - 1.00	Medium Stiff	Thumb penetrates about ¼ inch
8 - 15	0.50 - 1.00	1.00 - 2.00	Stiff	Thumb penetrates less than ¼ inch
15 - 30	1.00 - 2.00	2.00 - 4.00	Very Stiff	Readily indented by thumbnail
>30	>2.00	>4.00	Hard	Difficult to indent by thumbnail

Minor Constituents

Percent by Volume	Descriptor	Example
0 - 5%	"Trace" as part of soil description	"trace fine-grained sand"
5 - 15%	"Some" as part of soil description	"some fine-grained sand"
15 - 30%	"With" as part of group name	"**SILT WITH SAND**"
30 - 49%	Modifier to group name	"**SANDY SILT**"

Moisture Content

Dry: Absence of moisture, dusty, dry to the touch

Moist: Leaves moisture on hand

Wet: Visible free water, likely from below water table

	Plasticity	Dry Strength	Dilatancy	Toughness
ML	Non to Low	Non to Low	Slow to Rapid	Low, can't roll
CL	Low to Medium	Medium to High	None to Slow	Medium
MH	Medium to High	Low to Medium	None to Slow	Low to Medium
CH	Medium to High	High to Very High	None	High

Structure

Stratified: Alternating layers of material or color >6 mm thick

Laminated: Alternating layers < 6 mm thick

Fissured: Breaks along definite fracture planes

Slickensided: Striated, polished, or glossy fracture planes

Blocky: Cohesive soil that can be broken down into small angular lumps which resist further breakdown

Lenses: Has small pockets of different soils, note thickness

Homogeneous: Same color and appearance throughout

Visual-Manual Classification

Major Divisions			Group Symbols	Typical Names
Coarse Grained Soils: More than 50% retained on No. 200 sieve	Gravels: 50% or more *retained* on the No. 4 sieve	Clean Gravels	GW	Well-graded gravels and gravel/sand mixtures, little or no fines
			GP	Poorly-graded gravels and gravel/sand mixtures, little or no fines
		Gravels with Fines	GM	Silty gravels, gravel/sand/silt mixtures
			GC	Clayey gravels, gravel/sand/clay mixtures
	Sands: More than 50% *passing* the No. 4 sieve	Clean Sands	SW	Well-graded sands and gravelly sands, little or no fines
			SP	Poorly-graded sands and gravelly sands, little or no fines
		Sands with Fines	SM	Silty sands, sand/silt mixtures
			SC	Clayey sands, sand/clay mixtures
Fine-Grained Soils: 50% or more Passes No. 200 Sieve	Silt and Clays Low Plasticity Fines		ML	Inorganic silts, rock flour, clayey silts
			CL	Inorganic clays of low to medium plasticity, gravelly clays, sandy clays, lean clays
			OL	Organic soil of low plasticity
	Silt and Clays High Plasticity Fines		MH	Inorganic silts, clayey silts
			CH	Inorganic clays of high plasticity, fat clays
			OH	Organic soil of medium to high plasticity
Highly Organic Soils			PT	Peat, muck, and other highly organic soils

CARLSON CGT GEOTECHNICAL 503-601-8250

References:

ASTM D2487 Standard Practice for Classification of Soils for Engineering Purposes (Unified Soil Classification System)
ASTM D2488 Standard Practice for Description and Identification of Soils (Visual-Manual Procedure)
Terzaghi, K., and Peck, R.B., 1948, Soil Mechanics in Engineering Practice, John Wiley & Sons.

Carlson Geotechnical
A Division of Carlson Testing, Inc.
www.carlsontesting.com

FIGURE A3

Boring B-1

CLIENT James Lee
PROJECT NAME Strong Property
PROJECT NUMBER G2305938
PROJECT LOCATION North Williams Ave & N Alberta St - Portland, OR
DATE STARTED 7/28/23
GROUND ELEVATION 102 ft
ELEVATION DATUM Surface of North Alberta Street = 100'
WEATHER Sunny, 80°F
SURFACE Grass
LOGGED BY AET
REVIEWED BY BMW
DRILLING CONTRACTOR Western States Soil Conservation
SEEPAGE ---
EQUIPMENT GeoProbe 7822DT
GROUNDWATER DURING DRILLING ---
DRILLING METHOD Mud Rotary
GROUNDWATER AFTER DRILLING ---

ELEVATION (ft)	GRAPHIC LOG	GROUP SYMBOL	MATERIAL DESCRIPTION	GROUNDWATER	DEPTH (ft)	SAMPLE TYPE NUMBER	RECOVERY % (RQD)	BLOW COUNTS (N_{SPT} VALUE)	N_{60} VALUE ETR_{Hammer} = 74.3%	DRY UNIT WT. (pcf)
		OL	**ORGANIC SOIL:** Brown, moist, low plasticity, abundant rootlets.		0					
100		ML	**SILT WITH SAND:** Medium stiff, light brown, moist, low plasticity, with fine- to medium grained sand, some lenses of coarse-grained sand.		2					
					4	SPT 1	33	5-6-6 (12)	11	
98		SM	**POORLY GRADED SAND WITH SILT:** Medium dense, dark gray, moist, fine- to coarse-grained, with silt fines.							
					6	SPT 2	33	4-6-6 (12)	11	
96										
94										
92										

▲ SPT N_{60} VALUE ▲
PL LL MC
☐ FINES CONTENT (%) ☐
0 20 40 60 80 100

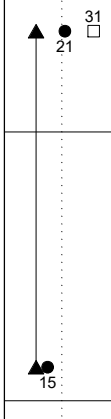

- Boring terminated at 6½ feet bgs.
- No groundwater or caving encountered.
- Boring loosely backfilled with bentonite upon completion.

CGT BOREHOLE DRAFT LOGS.GPJ 8/7/23 DRAFTED BY: AET

Carlson Geotechnical
A Division of Carlson Testing, Inc.
www.carlsontesting.com

FIGURE A4
Boring B-2

CLIENT James Lee
PROJECT NAME Strong Property
PROJECT NUMBER G2305938
PROJECT LOCATION North Williams Ave & N Alberta St - Portland, OR
DATE STARTED 7/28/23
GROUND ELEVATION 100 ft
ELEVATION DATUM Surface of North Alberta Street = 100'
WEATHER Sunny, 80°F
SURFACE Grass Fill
LOGGED BY AET
REVIEWED BY BMW
DRILLING CONTRACTOR Western States Soil Conservation
SEEPAGE ---
EQUIPMENT GeoProbe 7822DT
GROUNDWATER DURING DRILLING ---
DRILLING METHOD Mud Rotary
GROUNDWATER AFTER DRILLING ---

ELEVATION (ft)	GRAPHIC LOG	GROUP SYMBOL	MATERIAL DESCRIPTION	GROUNDWATER	DEPTH (ft)	SAMPLE TYPE NUMBER	RECOVERY % (RQD)	BLOW COUNTS (N_{SPT} VALUE)	N_{60} VALUE ETR_{Hammer} = 74.3%	DRY UNIT WT. (pcf)	▲ SPT N_{60} VALUE ▲ PL LL MC ☐ FINES CONTENT (%) ☐ 0 20 40 60 80 100
		OL FILL	**ORGANIC SOIL FILL:** Brown, moist, low plasticity, abundant rootlets.		0						
		ML FILL	**SILT FILL:** Brown, moist, low plasticity, trace angular gravel fragments up to ½-inch in diameter.								
			POORLY GRADED SAND: Loose to medium dense, dark gray, moist, fine- to coarse-grained, trace fines.		2						
98		SP				SPT 1	33	4-3-5 (8)	7		19
96					4						
94					6	SPT 2	33	5-6-5 (11)	10		18
92			• Boring terminated at 6½ feet bgs. • No groundwater or caving encountered. • Boring loosely backfilled with bentonite upon completion.								
90											

CGT BOREHOLE DRAFT LOGS.GPJ 8/7/23 DRAFTED BY: aet

Carlson Geotechnical
A Division of Carlson Testing, Inc.
www.carlsontesting.com

FIGURE A5
Boring B-3

CLIENT James Lee
PROJECT NAME Strong Property
PROJECT NUMBER G2305938
PROJECT LOCATION North Williams Ave & N Alberta St - Portland, OR
DATE STARTED 7/28/23
GROUND ELEVATION 100 ft
ELEVATION DATUM Surface of North Alberta Street = 100'
WEATHER Sunny, 80°F
SURFACE Grass Fill
LOGGED BY AET
REVIEWED BY BMW
DRILLING CONTRACTOR Western States Soil Conservation
SEEPAGE ---
EQUIPMENT GeoProbe 7822DT
GROUNDWATER DURING DRILLING ---
DRILLING METHOD Mud Rotary
GROUNDWATER AFTER DRILLING ---

ELEVATION (ft)	GRAPHIC LOG	GROUP SYMBOL	MATERIAL DESCRIPTION	GROUNDWATER	DEPTH (ft)	SAMPLE TYPE NUMBER	RECOVERY % (RQD)	BLOW COUNTS (N_{SPT} VALUE)	N_{60} VALUE ETR_{Hammer} = 74.3%	DRY UNIT WT. (pcf)
		OL FILL	**ORGANIC SOIL FILL:** Brown, moist, low plasticity, abundant rootlets.		0					
95		ML FILL	**SILT FILL:** Brown/gray mottled, moist, low plasticity, some fine-grained sand, trace burnt wood fragments, some angular gravel up to ½-inch in diameter.		5	SPT 1	33	11-12-12 (24)	22	
						SPT 2	44	8-14-6 (20)	19	
90		CL FILL	**LEAN CLAY WITH GRAVEL FILL:** Dark gray, moist, medium plasticity, with subrounded to subangular gravel up to ½-inch in diameter, some fine-grained sand, faint petroleum odor.		10	SPT 3	6	7-11-11 (22)	20	
						SPT 4	17	6-6-7 (13)	13	
85			**POORLY GRADED SAND:** Medium dense, dark gray, moist, fine- to coarse-grained, trace fines.		15					
						SPT 5	22	7-9-10 (19)	20	
80			Some gravel fragments up to 1-inch in diameter below 20 feet bgs.		20	SPT 6	33	10-13-13 (26)	31	
75					25	SPT 7	33	23-15-11 (26)	31	
70					30					
		SP				SPT 8	33	9-15-10 (25)	29	
65					35					
60					40					
			Dense, with gravel and cobbles of unknown size below 40 feet bgs.			SPT 9	11	19-23-15 (38)	47	
55					45					
50					50					
			Very dense below 50 feet bgs.			SPT 10	0	14-29-35 (64)	79	
45			• Boring terminated at 51½ feet bgs. • No groundwater or caving encountered. • Boring loosely backfilled with bentonite upon completion.							

▲ SPT N_{60} VALUE ▲
PL LL MC
☐ FINES CONTENT (%) ☐
0 20 40 60 80 100

16
13
18
14

CGT BOREHOLE DRAFT LOGS.GPJ 8/7/23 DRAFTED BY: aet

LU 23-103655 DZ
Exhibit A8

Carlson Geotechnical
A Division of Carlson Testing, Inc.
www.carlsontesting.com

FIGURE A6

Boring B-4

CLIENT James Lee
PROJECT NAME Strong Property
PROJECT NUMBER G2305938
PROJECT LOCATION North Williams Ave & N Alberta St - Portland, OR
DATE STARTED 7/28/23
GROUND ELEVATION 100.75 ft
ELEVATION DATUM Surface of North Alberta Street = 100'
WEATHER Sunny, 80°F
SURFACE Grass Fill
LOGGED BY AET
REVIEWED BY BMW
DRILLING CONTRACTOR Western States Soil Conservation
SEEPAGE ---
EQUIPMENT GeoProbe 7822DT
GROUNDWATER DURING DRILLING ---
DRILLING METHOD Hollow Stem 4¼-inch ID Auger
GROUNDWATER AFTER DRILLING ---

ELEVATION (ft)	GRAPHIC LOG	GROUP SYMBOL	MATERIAL DESCRIPTION	GROUNDWATER	DEPTH (ft)	SAMPLE TYPE NUMBER	RECOVERY % (RQD)	BLOW COUNTS (N_{SPT} VALUE)	N_{60} VALUE ETR_{Hammer} = 74.3%	DRY UNIT WT. (pcf)
100		OL FILL	**ORGANIC SOIL FILL:** Brown, moist, low plasticity, abundant rootlets, trace gravel fragments up to ½-inch in diameter.		0					
			POORLY GRADED SAND: Loose, brown, moist, fine- to coarse-grained, trace rounded gravel up to ½-inch in diameter, trace silt fines.			SPT 1	33	4-4-4 (8)	7	
					5					
95						SPT 2	33	4-3-3 (6)	6	
						SPT 3	22	4-4-5 (9)	8	
					10					
90			Medium dense below 10 feet bgs.			SPT 4	33	9-10-8 (18)	18	
		SP			15					
85										
					20					
80						SPT 5	33	8-9-10 (19)	22	
					25					
75						SPT 6	33	5-7-7 (14)	16	
70										

▲ SPT N_{60} VALUE ▲

PL LL MC

☐ FINES CONTENT (%) ☐

0 20 40 60 80 100

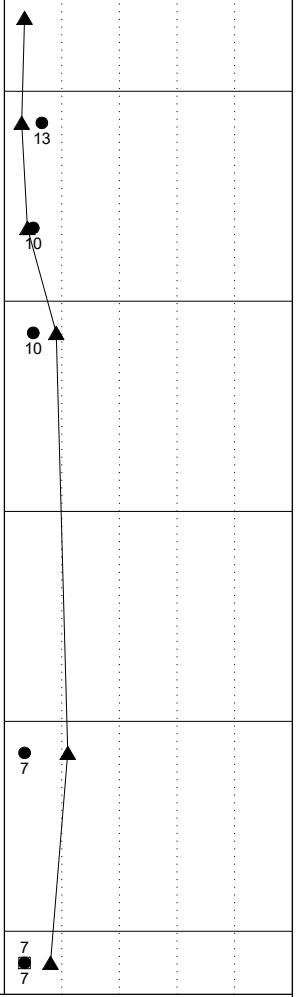

- Boring terminated at 26½ feet bgs due to practical refusal of hollow stem auger on dense sand.
- No groundwater or caving encountered.
- Infiltration test IT-1 performed at 25 feet bgs. Reference Appendix B for test results. SPT 6 conducted following completion of infiltration test.
- Boring loosely backfilled with bentonite upon completion.

CGT BOREHOLE DRAFT LOGS.GPJ 8/7/23 DRAFTED BY: aet

Carlson Geotechnical
A Division of Carlson Testing, Inc.
www.carlsontesting.com

FIGURE A7

Boring B-5

CLIENT James Lee
PROJECT NAME Strong Property
PROJECT NUMBER G2305938
PROJECT LOCATION North Williams Ave & N Alberta St - Portland, OR
DATE STARTED 7/28/23
GROUND ELEVATION 100.5 ft
ELEVATION DATUM Surface of North Alberta Street = 100'
WEATHER Sunny, 80°F
SURFACE Grass Fill
LOGGED BY AET
REVIEWED BY BMW
DRILLING CONTRACTOR Western States Soil Conservation
SEEPAGE ---
EQUIPMENT GeoProbe 7822DT
GROUNDWATER DURING DRILLING ---
DRILLING METHOD Mud Rotary
GROUNDWATER AFTER DRILLING ---

ELEVATION (ft)	GRAPHIC LOG	GROUP SYMBOL	MATERIAL DESCRIPTION	GROUNDWATER	DEPTH (ft)	SAMPLE TYPE NUMBER	RECOVERY % (RQD)	BLOW COUNTS (N_{SPT} VALUE)	N_{60} VALUE ETR_{Hammer} = 74.3%	DRY UNIT WT. (pcf)
100		OL FILL	**ORGANIC SOIL FILL:** Brown, moist, low plasticity, abundant rootlets, trace gravel fragments up to ½-inch in diameter.		0					
			POORLY GRADED SAND FILL: Dark gray, moist, fine- to coarse-grained, trace fines.			SPT 1	33	1-2-4 (6)	6	
					5					
95		SP FILL	approximate 2-foot void encountered during sampling. Very loose below 5 feet bgs.			SPT 2	0	0-0-0 (0)		
						SPT 3	11	0-0-0 (0)		
					10					
90						SPT 4	22	0-0-1 (1)	1	
			POORLY GRADED SAND: Loose, dark gray, moist, fine- to coarse-grained, trace fines.			SPT 5	33	3-4-4 (8)	8	
		SP			15					
85						SPT 6	33	2-4-4 (8)	8	

▲ SPT N_{60} VALUE ▲
PL LL MC
☐ FINES CONTENT (%) ☐
0 20 40 60 80 100

20
17

- Boring terminated at 16½ feet bgs.
- No groundwater or caving encountered.
- Boring loosely backfilled with bentonite upon completion.

CGT BOREHOLE DRAFT LOGS.GPJ 8/7/23 DRAFTED BY: aet

Carlson Geotechnical
A Division of Carlson Testing, Inc.
www.carlsontesting.com

FIGURE A8

Boring B-6

CLIENT James Lee
PROJECT NAME Strong Property
PROJECT NUMBER G2305938
PROJECT LOCATION North Williams Ave & N Alberta St - Portland, OR
DATE STARTED 7/28/23
GROUND ELEVATION 100.5 ft
ELEVATION DATUM Surface of North Alberta Street = 100'
WEATHER Sunny, 80°F
SURFACE Grass Fill
LOGGED BY AET
REVIEWED BY BMW
DRILLING CONTRACTOR Western States Soil Conservation
SEEPAGE ---
EQUIPMENT GeoProbe 7822DT
GROUNDWATER DURING DRILLING ---
DRILLING METHOD Hollow Stem 6¼-inch Auger
GROUNDWATER AFTER DRILLING ---

ELEVATION (ft)	GRAPHIC LOG	GROUP SYMBOL	MATERIAL DESCRIPTION	GROUNDWATER	DEPTH (ft)	SAMPLE TYPE NUMBER	RECOVERY % (RQD)	BLOW COUNTS (N_{SPT} VALUE)	N_{60} VALUE ETR_{Hammer} = 74.3%	DRY UNIT WT. (pcf)	▲ SPT N_{60} VALUE ▲ PL LL MC ☐ FINES CONTENT (%) ☐ 0 20 40 60 80 100
100		OL FILL	**ORGANIC SOIL FILL:** Brown, moist, low plasticity, abundant rootlets, trace gravel fragments up to ¼-inch in diameter.		0						
		ML	**SILT:** *Medium stiff*, brown, moist to dry, low plasticity, some fine-grained sand.								
		ML	**SANDY SILT:** Medium stiff, brown/gray, moist, medium plasticity, with fine- to coarse-grained sand.		2						
98						SPT 1	6	2-2-4 (6)	6		
					4						
96											
					6	SPT 2	11	3-4-4 (8)	7		14 58
94											
92											

- Boring terminated at 6½ feet bgs.
- No groundwater or caving encountered.
- Infiltration test IT-2 performed at 5 feet bgs. Reference Appendix B for test results. SPT 2 conducted following completion of infiltration test.
- Boring loosely backfilled with bentonite upon completion.

CGT BOREHOLE DRAFT LOGS.GPJ 8/7/23 DRAFTED BY: aet

Carlson Geotechnical

A division of Carlson Testing, Inc.
Phone: (503) 601-8250
www.carlsontesting.com

Bend Office	**(541) 330-9155**
Eugene Office	**(541) 345-0289**
Salem Office	**(503) 589-1252**
Tigard Office	**(503) 684-3460**

Appendix B: Results of Infiltration Testing

Strong Property - North Portland
4931 North Williams Avenue
Portland, Oregon

CGT Project Number G2305938

August 7, 2023

Prepared For:

James Lee
Community Development Partners
126 NE Alberta Street, Suite 202
Portland, Oregon, 97211

Prepared by
Carlson Geotechnical

B.1.0 INTRODUCTION

The project civil engineer Mr. Casey Jones, P.E., of Vega Civil Engineering, LLC, requested two infiltration tests be conducted in the southwestern portion of the site. Mr. Jones requested the tests be conducted at depths of about 5 and 30 feet below ground surface (bgs). The tests were performed in drilled hollow-stem auger borings, designated B-4 and B-6 on the Site Plan, which is attached to the main report as Figure 2.

B.2.0 TEST PROCEDURE

The infiltration tests (IT-1 and IT-2) were performed in general accordance with the Encased Falling Head Infiltration Test method as described in Chapter 2 of the 2020 City of Portland Stormwater Management Manual (PSWMM).

Tests IT-1 and IT-2 were performed within 4¼-inch diameter and 6¼-inch diameter hollow stem augers, respectively, as allowed by the referenced method. Once each drilled boring was advanced to the test depth, approximately 2 inches of gravel was added to the bottom of the auger and then the auger was filled with approximately 12 inches of water. In IT-1 (B-4), the drill rig encountered practical refusal with the hollow stem auger on relatively dense sands at a depth of about 25 feet bgs. Therefore the infiltration test for IT-1 was conducted at this depth.

In IT-1, the water infiltrated into the subsurface materials in less than 10 minutes, this was repeated a second time with similar results; therefore, we immediately proceeded with the infiltration test. A steady source of water (hose connected to a water tank) was introduced into the auger at an inflow rate of 2½ gallons per minute (flow rate was measured using a 5-gallon bucket and a stopwatch). Approximately 275 gallons of water was introduced into the hole for 1 hour and 50 minutes and we were unable to achieve any measurable head of water during that time. The test was then terminated.

In IT-2, the soils were allowed to soak for 1 hour in accordance with the test method. After the soaking period, the water level was re-established to 12 inches and the drop in water level was recorded at 10-minute intervals for 1 hour. This process was repeated two additional times, resulting in three trials. Measurements were taken with a tape measure and recorded to the nearest one-eighth of an inch.

Table B1 Results of Infiltration Test IT-1

Location:	Strong Property	Date:	7-28-2023	Exploration Number:	B-4
Test Method:	City of Portland Encased Falling Head	Inner Diameter of pipe	4¼ inches	Infiltration Test Depth:	25 feet bgs
Soil at infiltration test depth:	Poorly Graded Sand		See exploration log for detail		
Test Start Time:	1:38 PM	Notes:	Water inflow = 2½ gallons per minute No head build up after 1+ hours. Test terminated following introduction of approximately 275 gallons of water.		
Test End Time:	3:28 PM				
Head During Test:	None				

Table B2 Results of Infiltration Test IT-2

	Location:	Portland - Strong Property		Date:	7/28/2023	Exploration Number:	B-6
	Test Method:	City of Portland Encased Falling Head		Inner Diameter of Pipe:	6¼ inches	Infiltration Test Depth:	5 feet bgs
	Soil at infiltration test depth:		Silty Sand		see exploration log for detail		

	Time	Time Interval (Minutes)	Measurement (inches)*	Drop in Water level (inches)	Infiltration Rate** (inches per hour)	Remarks
Trial 1	11:44 AM	10	46 5/8	---	---	Water adjusted to provide 12 inch head
	11:54 AM	10	47 5/8	1	---	
	12:04 PM	10	48 1/2	7/8	---	
	12:14 PM	10	49 1/4	3/4	---	
	12:24 PM	10	50	3/4	---	
	12:34 PM	10	50 3/4	3/4	---	
	12:44 PM	10	51 1/2	3/4	**4 7/8**	Trial 1 concluded.
Trial 2	12:59 PM	10	46 5/8	---	---	Water adjusted to provide 12 inch head
	1:09 PM	10	47 3/8	3/4	---	
	1:19 PM	10	48 1/8	3/4	---	
	1:29 PM	10	48 7/8	3/4	---	
	1:39 PM	10	49 3/8	1/2	---	
	1:49 PM	10	49 7/8	1/2	---	
	1:59 PM	10	50 3/8	1/2	**3 3/4**	Trial 2 concluded.
Trial 3	2:02 PM	10	46 1/8	---	---	Water adjusted to provide 12 inch head
	2:12 PM	10	46 5/8	1/2	---	
	2:22 PM	10	47 1/8	1/2	---	
	2:32 PM	10	47 5/8	1/2	---	
	2:42 PM	10	48 1/8	1/2	---	
	2:52 PM	10	48 5/8	1/2	---	
	3:02 PM	10	49 1/8	1/2	**3**	Trial 3 concluded

*Measured to nearest 1/8 of an inch

** Values calculated are raw (unfactored) rates.

B.3.0 DISCUSSION

B.3.1 Measured Infiltration Rates

In IT-1, as indicated above, we were unable to develop a head of water using a steady inflow rate (2½ gallons per minute) during the testing period of 1 hour and 50 minutes. Using the equation presented for the direct infiltration test method in the referenced manual, the raw measured infiltration rate is equal to 2,436 inches per hour at the test location and depth (25 feet bgs). We recommend the raw measured infiltration rate be assigned as 100 inches per hour as means to add some conservatism in design. In the event a larger infiltration rate is desired, we recommend an increased scale of testing be performed using a larger volume of water delivered from a steady water source (e.g. water truck, fire hydrant, etc.).

In IT-2, the average raw (unfactored), infiltration rate[1] was approximately 3 inches per hour at the tested location and depth (5 feet bgs).

Per Table 2-4 of the PSWMM, a minimum allowable factor of safety (FoS) of 2.0 shall be applied to the field-tested infiltration rate(s) where the encased falling head test method is used. We recommend this FoS be applied to calculate the design infiltration rate for use in design of the stormwater infiltration system(s) to be constructed at/near the test location(s) and depth(s).

Once the design is completed, we recommend the infiltration system design (provided by others) and location be reviewed by the geotechnical engineer. If the location and/or depth of the system(s) change from what was indicated at the time of our fieldwork, additional testing may be recommended.

B.3.2 Seasonal High Groundwater Level

As indicated in Table 2-2 of the referenced stormwater manual, a minimum "seasonal correction factor" equal to 6 feet shall be applied when groundwater measurements are made between the months of June and February. Additionally, Figure 2-3 of the referenced stormwater manual indicates that a minimum of 5 feet of separation (measured vertically) is required between the base of the stormwater facility and the "seasonal high groundwater level".

Groundwater was not encountered within depths explored at the site, and no indications (e.g. mottling) of seasonal fluctuations of groundwater were observed in the site soils. Based on our explorations, our experience in the area, review of local water well logs (see Section 2.3.3 of main body of report), and review of the site's geologic setting, we anticipate the groundwater level in the area is at depths in excess of 100 feet bgs. Accordingly, the groundwater level (phreatic surface) is not anticipated to be a factor for infiltration facility design.

[1] Per the referenced infiltration test method: "The average infiltration rate over the last trial should be used to calculate the unfactored infiltration rate."

APPENDIX

© 2023 HOLST ARCHITECTURE INC.

NE CORNER

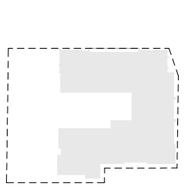

HOLST

© 2023 HOLST ARCHITECTURE INC.

STRONG PROPERTY
4931-4947 N WILLIAMS AVE
PORTLAND, OR 97217

DESIGN REVIEW
01.30.2024

title : RENDERINGS

LU NO. 23-103655 DZM

sheet : APP.2

NE CORNER

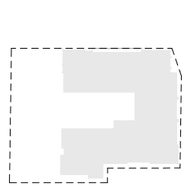

HOLST

© 2023 HOLST ARCHITECTURE INC.

STRONG PROPERTY
4931-4947 N WILLIAMS AVE
PORTLAND, OR 97217

DESIGN REVIEW
01.30.2024

title : RENDERINGS

LU NO. 23-103655 DZM

sheet : APP.3

SE CORNER

*Art shown for location only (not actual design).

© 2023 HOLST ARCHITECTURE INC.

HOLST

STRONG PROPERTY
4931-4947 N WILLIAMS AVE
PORTLAND, OR 97217

DESIGN REVIEW
01.30.2024

title : RENDERINGS | LU NO. 23-103655 DZM | sheet : APP.4

NW CORNER

*Art shown for location only (not actual design).

© 2023 HOLST ARCHITECTURE INC.

HOLST

STRONG PROPERTY
4931-4947 N WILLIAMS AVE
PORTLAND, OR 97217

DESIGN REVIEW
01.30.2024

title : RENDERINGS | LU NO. 23-103655 DZM | sheet : APP.5

COURTYARD

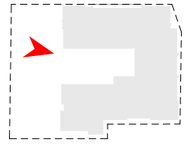

N FACADE

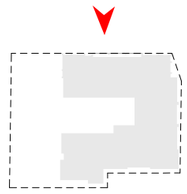

*Art shown for location only (not actual design).

E FACADE

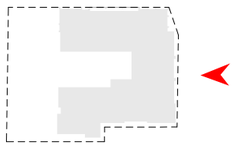

*Art shown for location only (not actual design).

MAIN ENTRY

HOLST

© 2023 HOLST ARCHITECTURE INC.

STRONG PROPERTY
4931-4947 N WILLIAMS AVE
PORTLAND, OR 97217

DESIGN REVIEW
01.30.2024

title : RENDERINGS

LU NO. 23-103655 DZM

sheet : APP.9

UNITS ON ALBERTA

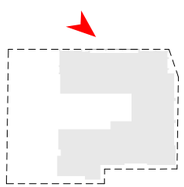

HOLST

© 2023 HOLST ARCHITECTURE INC.

STRONG PROPERTY
4931-4947 N WILLIAMS AVE
PORTLAND, OR 97217

DESIGN REVIEW
01.30.2024

title : RENDERINGS

LU NO. 23-103655 DZM

sheet : APP.10

COMM. RM. ENTRY

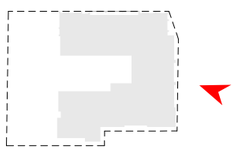

NW CORNER

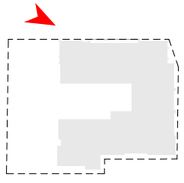

*Art shown for location only (not actual design).

CONTEXT STUDIES

MULTI-MODAL CIRCULATION MAP

CAR DOMINANT VEHICLE CIRCULATION

- BUS LINE 44
- ONE WAY STREETS ON WILLIAMS ST AND VANCOUVER ST
- ALBERTA SERVES AS TWO DIRECTION STREET, WITH ONE LANE PER DIRECTION

PEDESTRIAN & VEHICLE ACCESS POINTS

- PEDESTRIAN ACCESS: N ALBERTA
- VEHICLE ACCESS: N ALBERTA
- BICYCLE ACCESS : DEDICATED BIKE LANE ON N WILLIAMS AVE

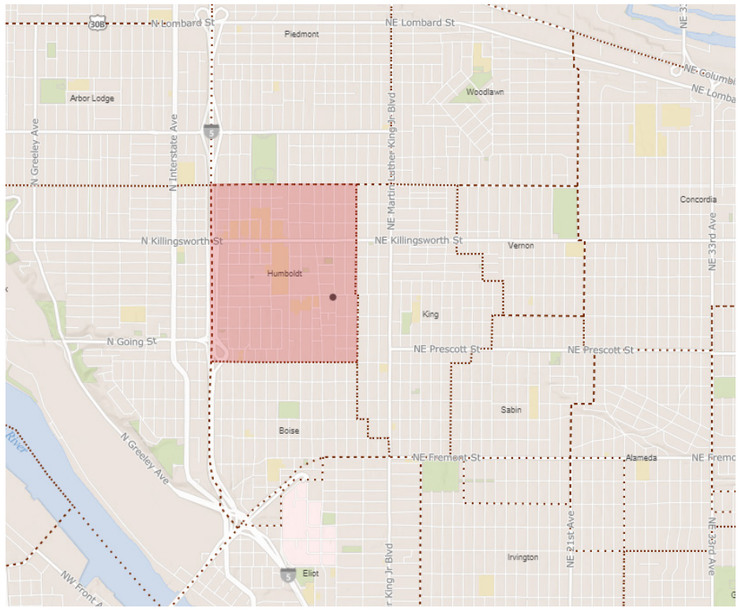

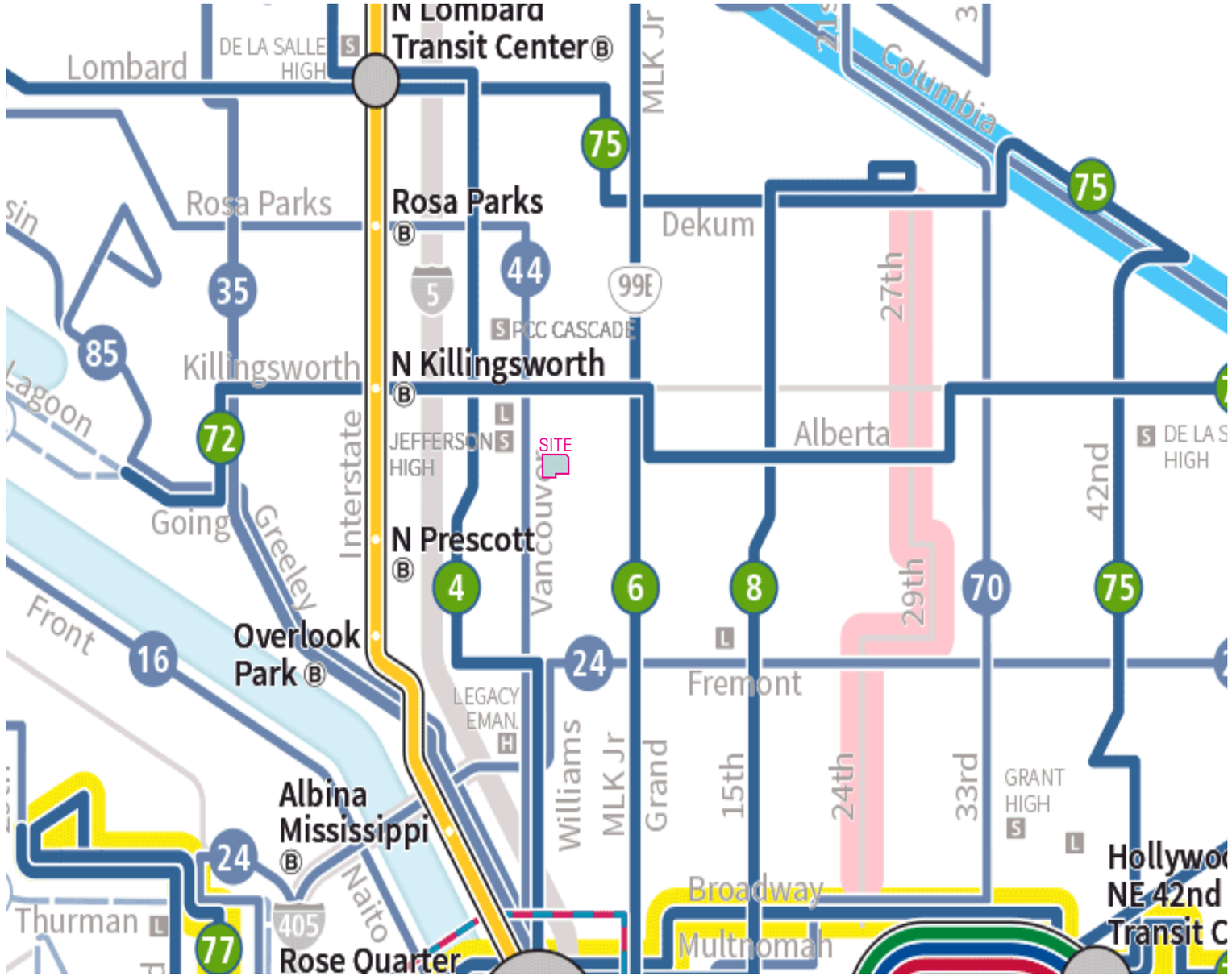

CONTEXT STUDIES

EXISTING CONDITIONS

EXISTING CONDITIONS PLAN

- SINGLE FAMILY HOUSE TO BE DEMOLISHED
- PERIPHERAL BUILDINGS TO REMAIN
- FIVE CURB-CUTS ON SITE
- TREES ON SITE TO BE REMOVED

View 1: Site from House on Site looking Southeast

View 2: Site from Northwest looking Southeast.

CONTEXT STUDIES

EXISTING CONDITIONS

View 3: Site from opposite corner

View 4: Site from East looking West

View 5: Site from Southeast looking Northwest

Aerial view from NE looking SW

Aerial view from SW looking NE

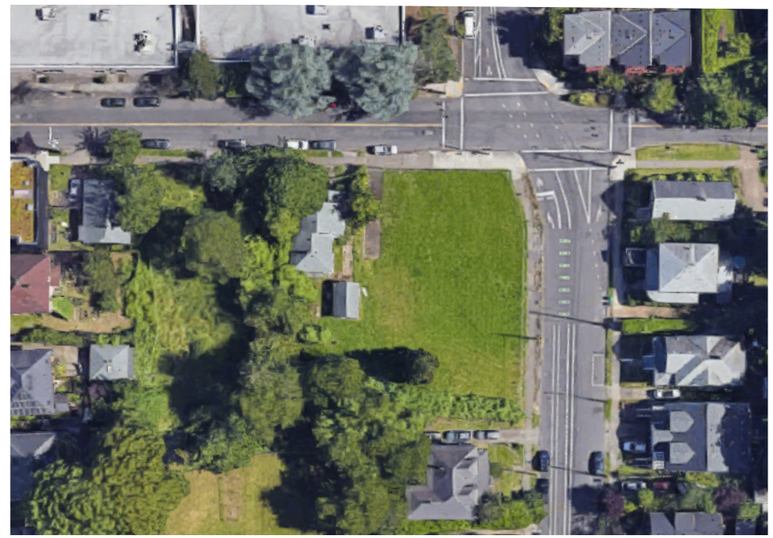

View of complete block

ROOFTOP EQUIPMENT SIGHTLINES

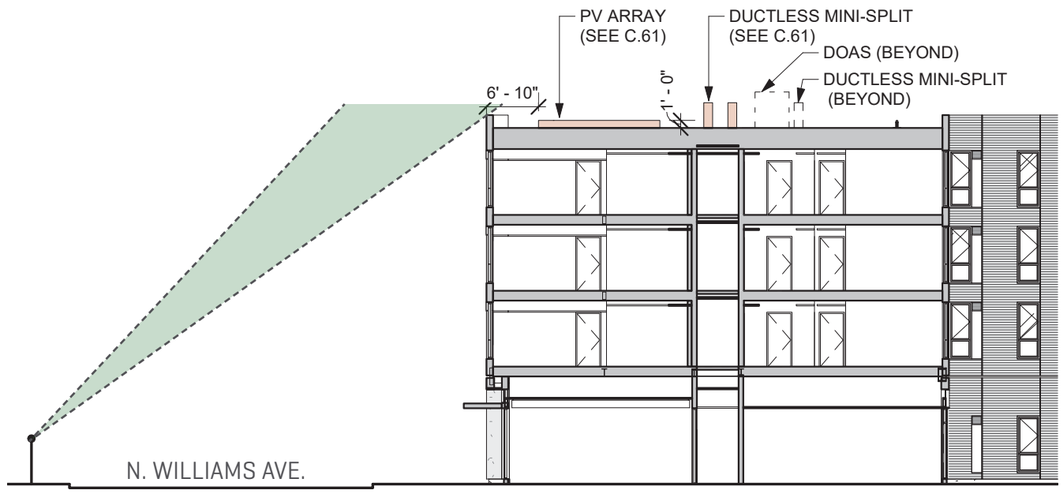

E/W SECTION
1" = 20'-0"

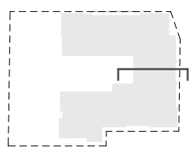

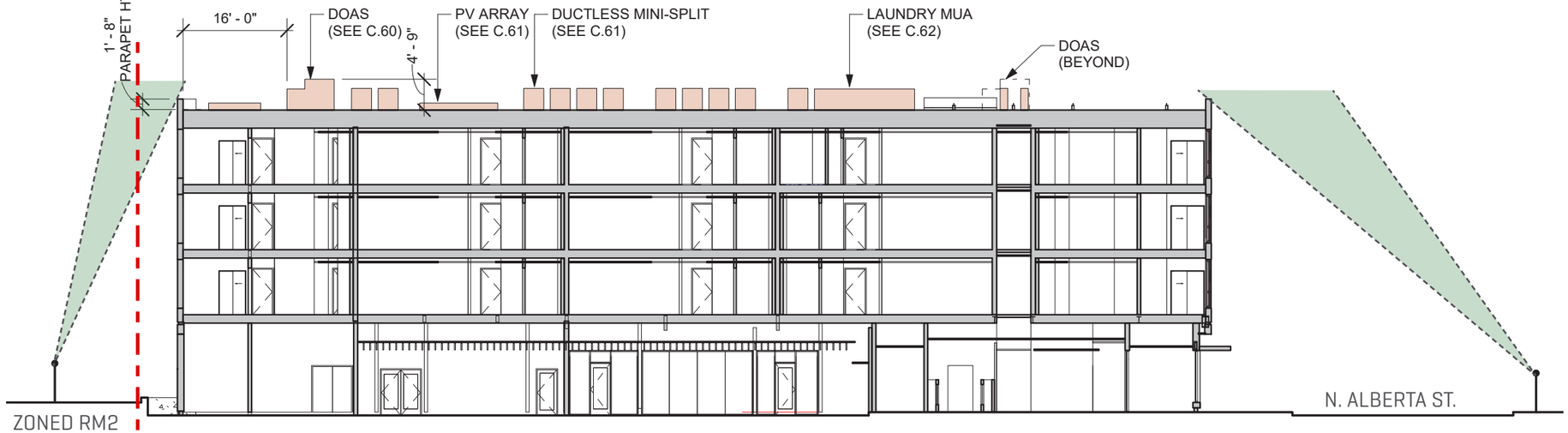

*33.130.235.C.3 - EQUIPMENT ON ROOF IS SET BACK FROM ROOF EDGES FACING RM2 ZONE 3 FEET FOR EACH FOOT OF EQUIPMENT HEIGHT

N/S SECTION
1" = 20'-0"

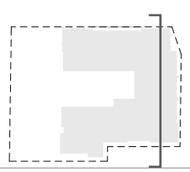

LEGEND

- MECHANICAL EQUIPMENT
- PEDESTRIAN VIEW ANGLE

HOLST

© 2023 HOLST ARCHITECTURE INC.

STRONG PROPERTY
4931-4947 N WILLIAMS AVE
PORTLAND, OR 97217

DESIGN REVIEW
01.30.2024

title : SITELINES

LU NO. 23-103655 DZM

sheet : APP.16

CONCEPT MASSING

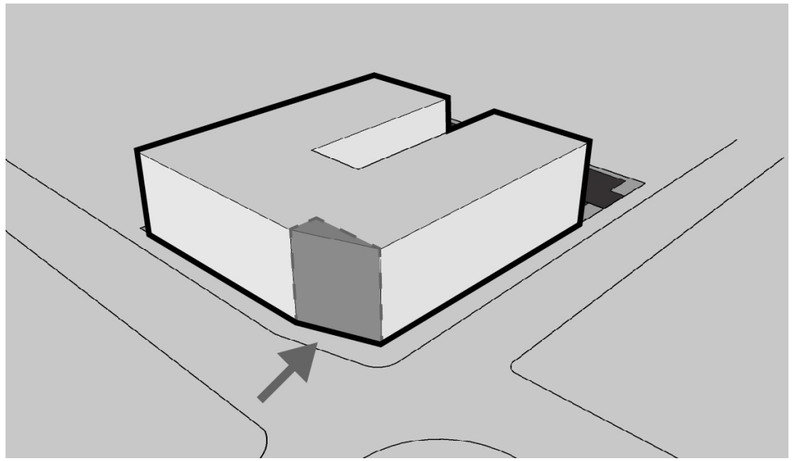

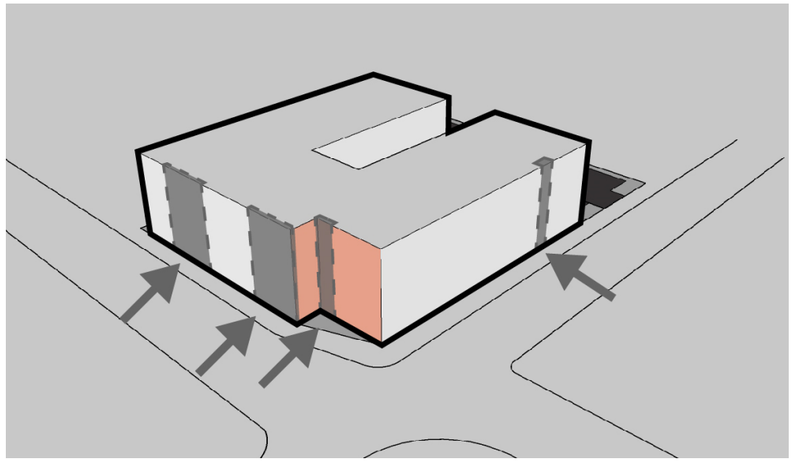

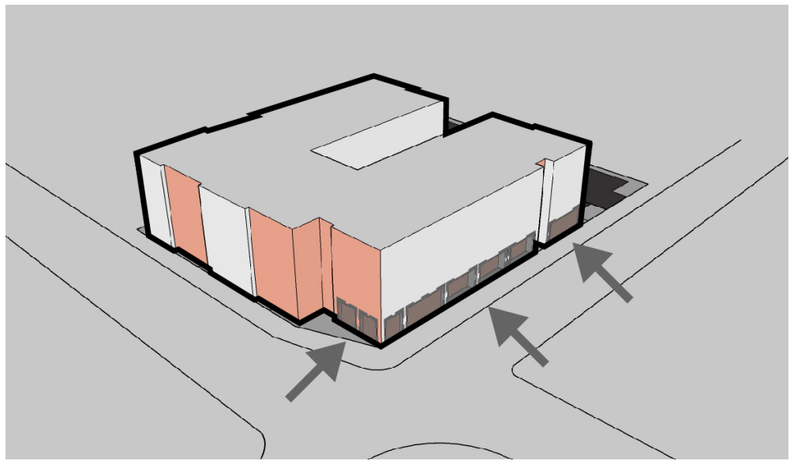

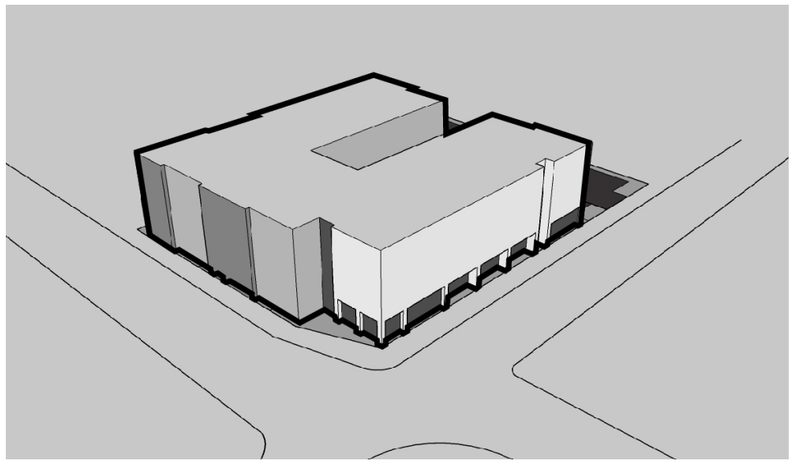

The ‘village’ scheme introduces offset massing along N. Williams facade to relate to the adjacent context of single family homes across the street. A recessed main entry at the corner of N. Williams and N. Alberta provides an opportunity for an entry plaza and a clear identity for the front door. A singular massing is maintained along N. Alberta to relate to the distinctly different context. The Alberta massing extends to the property line on the upper levels, insetting along the ground floor to provide privacy at the ground floor units.

© 2023 HOLST ARCHITECTURE INC.

STRONG PROPERTY
4931-4947 N WILLIAMS AVE
PORTLAND, OR 97217

DESIGN REVIEW
01.30.2024

title : MASSING & DESIGN CONCEPT
LU NO. 23-103655 DZM
sheet : APP.17

LU 23-103655 DZ Exhibit A9

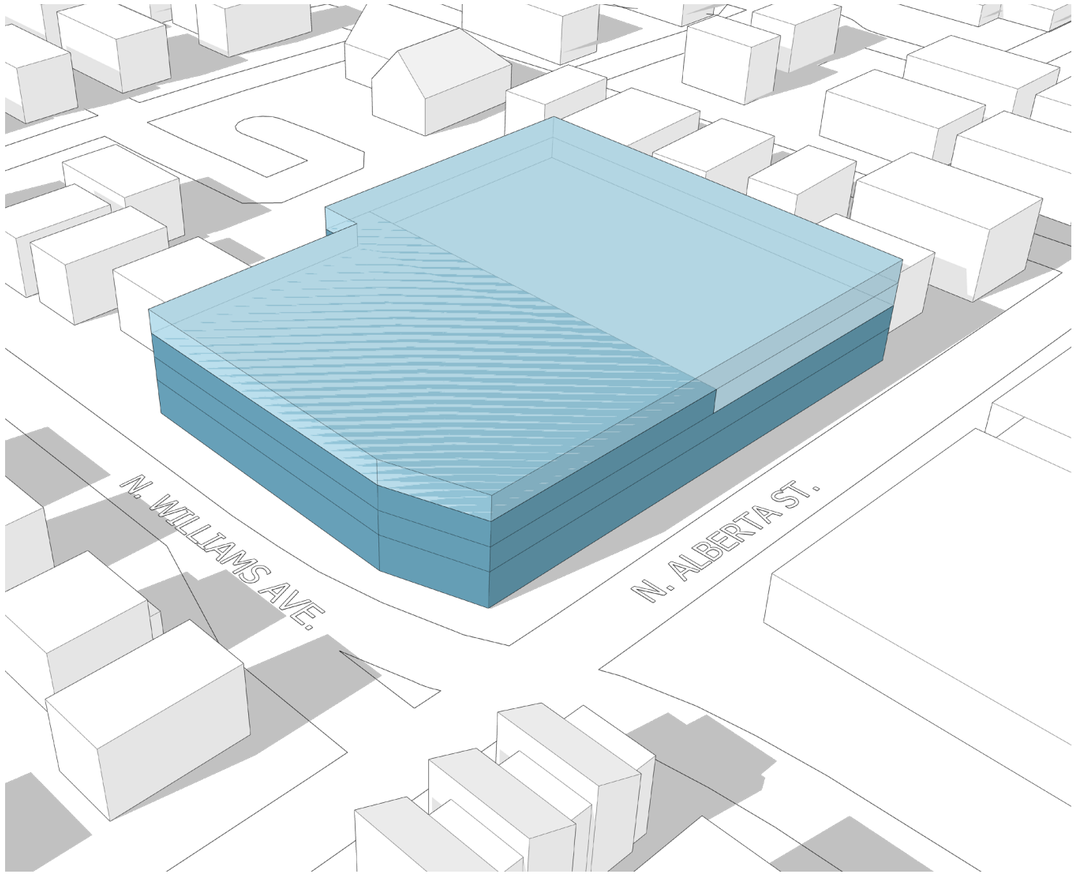

MAX FAR 2.5:1 = 103,040 GSF

BONUS FAR 1.5:1 = 61,825 GSF

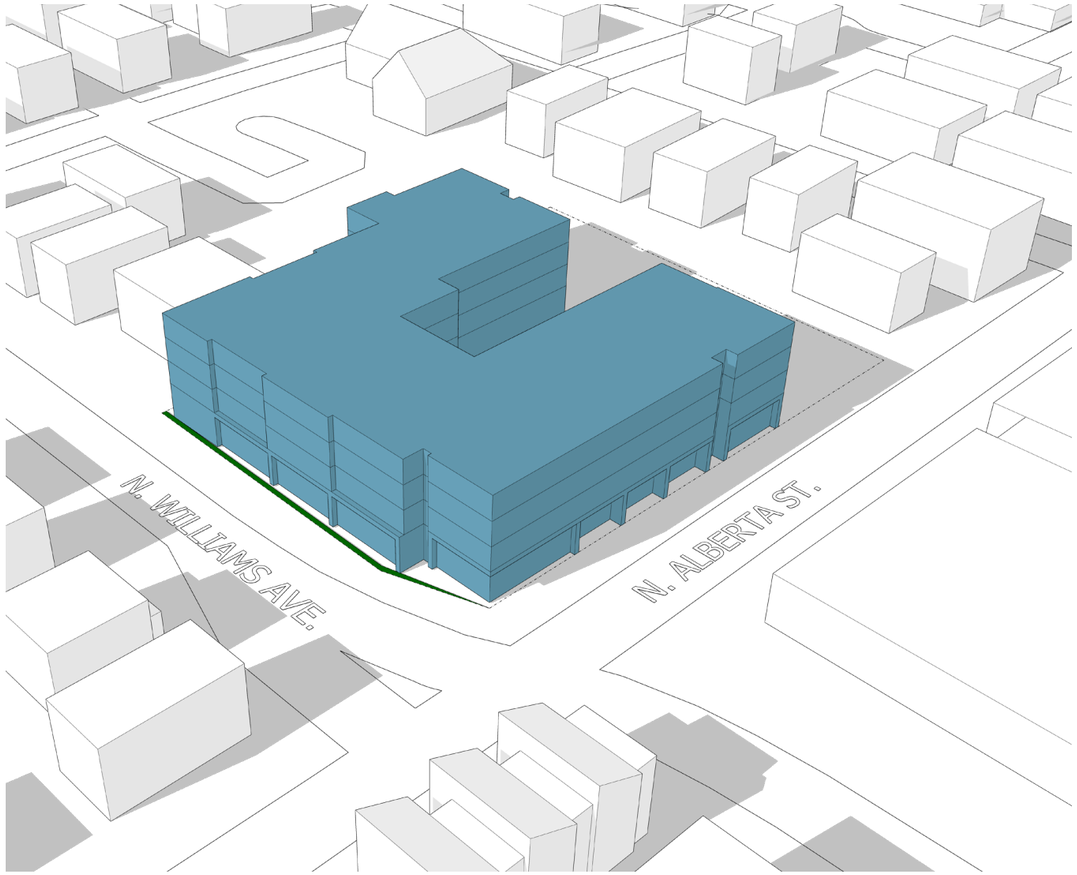

PROPOSED FAR 2.0:1 = 80,669 GSF

ROW DEDICATION

CALCULATED AREA

NON-RESIDENTIAL FACADE AREA

RESIDENTIAL FACADE AREA

NORTH ELEVATION
1" = 20'-0"

REQUIRED: NON-RESIDENTIAL		PROVIDED
25% OF AREA:	644 SF x 25% = **161 SF**	**262 SF**
REQUIRED: RESIDENTIAL		
25% OF AREA:	552 SF x 25% = **138 SF**	**168 SF**

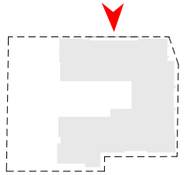

SCALE: 1" = 20' - 0"

0' 10' 20' 40'

EAST ELEVATION
1" = 20'-0"

REQUIRED		PROVIDED
40% OF AREA:	1,257 SF x 40% = **503 SF**	**677 SF**

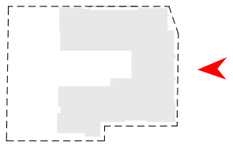

HOLST

© 2023 HOLST ARCHITECTURE INC.

STRONG PROPERTY
4931-4947 N WILLIAMS AVE
PORTLAND, OR 97217

DESIGN REVIEW
01.30.2024

title : GROUND FLOOR WINDOWS

LU NO. 23-103655 DZM

sheet : **APP.19**

NORTH ELEVATION
1" = 20'-0"

REQUIRED FACADE ARTICULATION
25% OF AREA: 7,275 SF x 25% = **1,819 SF**

PROVIDED
1,941 SF

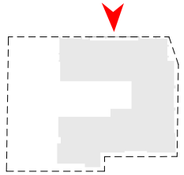

OFF-SET AREA 2' ATLEAST 2' MIN.

FACADE FOR CALCULATION

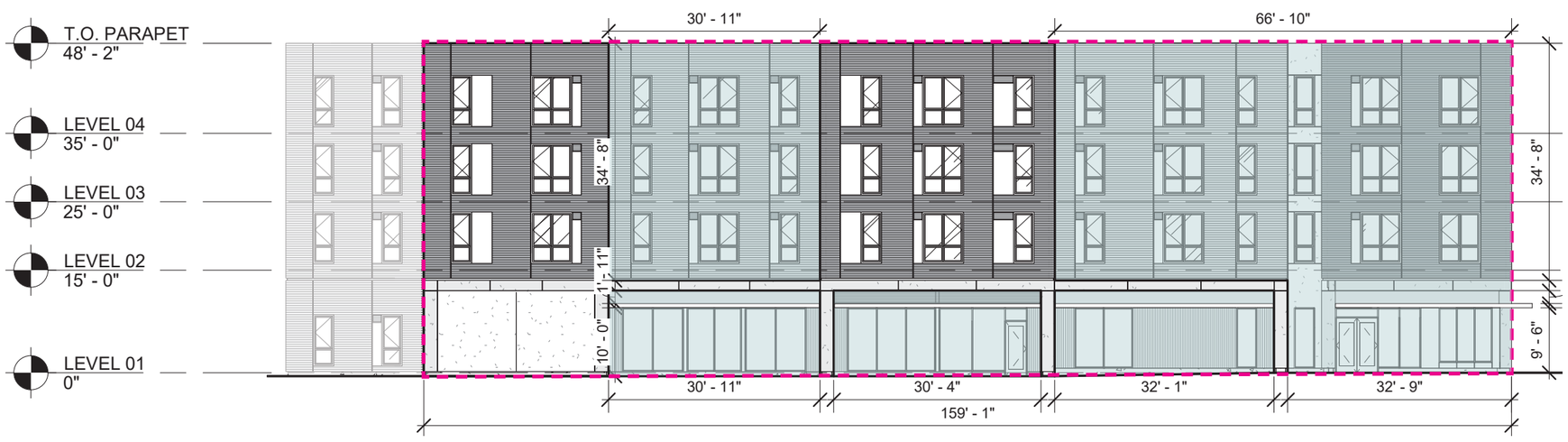

EAST ELEVATION
1" = 20'-0"

REQUIRED
25% OF AREA: 7,720 SF x 25% = **1,930 SF**

PROVIDED
4,916 SF

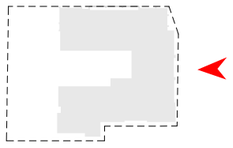

SCALE: 1" = 20' - 0"

0' 10' 20' 40'

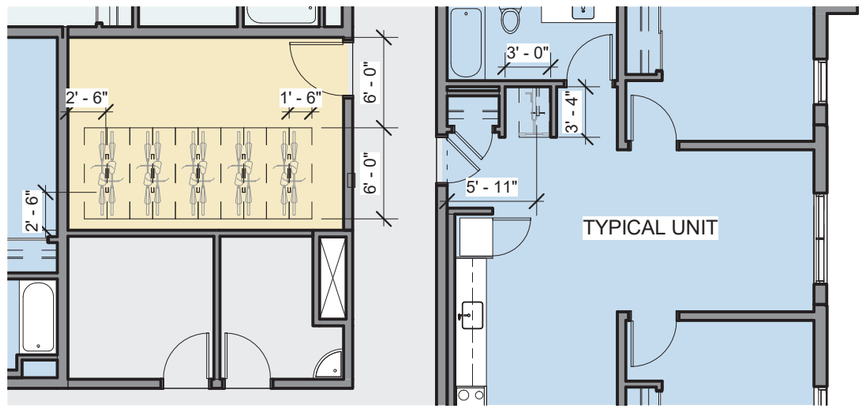

② ENLARGED PLAN AT LEVEL 02-04 BIKE ROOMS
Scale 1" = 10'-0"

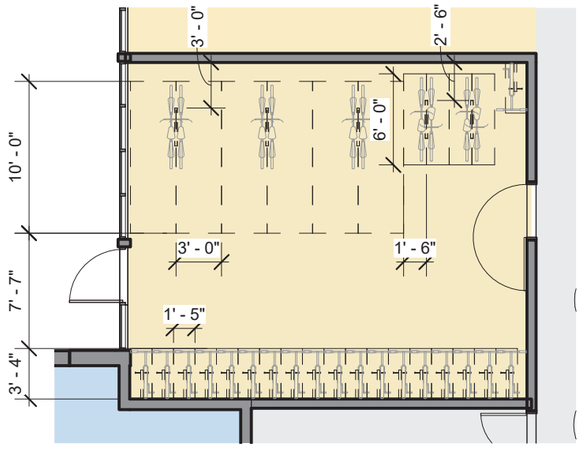

① ENLARGED PLAN AT LEVEL 01 BIKE ROOM
Scale 1" = 10'-0"

REQUIRED LONG-TERM BIKE PARKING: 75 UNITS X 1.5 STALLS = 113

		REQ'D	PROVIDED
HORIZONTAL (30% MIN.):	113 X .3	34	**34**
VERTICAL* (70% MAX.):	113 X .7	MAX 79	**73**
LARGE BIKE SPACE (5% MIN.):	113 X .05	6	**6**
TOTAL PROVIDED			**113**

*54 VERTICAL IN UNIT BIKE PARKING INCLUDED IN COUNT. 50% REQUIRED BIKE PARKING ALLOWABLE IN UNIT. 113 X .5 = 56 ALLOWABLE SPACES.

REQUIRED SHORT-TERM BIKE PARKING: 1 PER 20 UNITS 75 / 20 = 4
****PROVIDED: 4**

**SEE C.4 FOR SHORT-TERM BIKE PARKING LOCATION

HOLST

© 2023 HOLST ARCHITECTURE INC.

STRONG PROPERTY
4931-4947 N WILLIAMS AVE
PORTLAND, OR 97217

DESIGN REVIEW
01.30.2024

title : LONG-TERM BIKE PARKING

LU NO. 23-103655 DZM

sheet : **APP.21**

DAR - SUMMARY OF COMMENTS

CONTEXT

- **There is such a rich history in Albina to draw inspiration for the response to social and cultural significance.**

Response: The proposed design drew inspiration from the breadth and variety of cultural and social elements throughout the surrounding Albina neighborhood. The mass provides multiple interior and exterior areas of expression in large format art areas on both prominent N Alberta and N Williams facades. See C.8, C.11, App.2-App.12 for locations.

- **The project feels introverted and does not appear to represent the expressiveness of African American culture. Explore ways to incorporate moments of joy and exuberance through building details, color, landscaping, art, etc. The partnership with SEI provides a great opportunity to do so.**

Response: The proposed design provides numerous exterior and interior areas for joy and exuberance. With multiple locations for exterior art around the building. The art will be commissioned through SEI and their team that has experience throughout the Albina neighborhood of providing high quality culturally specific murals and art. The design of the courtyard provides numerous ways for families to interact with, explore and enjoy nature. See C.8, C.11, C.32, App.6 and App.12 for art locations and courtyard design.

- **The project's location on such a prominent corner at Williams and Alberta provides a great opportunity to provide art, which should be visible to the public.**

Response: The proposed ground floor design provides facades along both the SE and NW corners of the building dedicated for artwork. See C.8 and C.9 for locations and dimensions.

- **Courtyard presents a great canvas to incorporate a response to the water guideline. The response doesn't have to be excessive.**

Response: The design of the courtyard incorporates native and adapted planting for a rich botanical experience. Residents are connected to nature through intentional and interesting planting design with the native palette of the pacific northwest, as well as a unique nature play and exploration experience provided by an aggregate walkway with form derived from the abundance of creeks and streams in the Willamette valley. See C.32 and C.49 for proposed pathway features.

PUBLIC REALM

- **Residential ground floor units need to be designed to provide both comfort and safety for the residents and contribute to the activity and vibrancy along the sidewalk. Old and new residential in this area does this successfully by incorporating stoops, entrances, setbacks and landscape screening. When units are close to the street, the elevation above sidewalk grade is so important to create safe and vibrant frontages.**

Response: The proposed design includes individual patios for each of the (3) units along N. Alberta. The patios include a raised landscape planter to provide both comfort and safety to the residents. See C.5, C.53, App.10.

- **Given the shallow depth, at-grade condition of the proposed units, it was determined that a secured outdoor occupiable space with layered landscaping could provide screening and a buffer for the units while also engaging the ground floor program with the sidewalk. Individual unit front entrances with stoops are not critical so long as the space is occupiable.**

Response: The proposed design includes individual patios for each of the (3) units along N. Alberta. The patios include a raised landscape planter to provide screening and buffer the space. See C.5, C.53, App.10.

- **Some kind of small tree, like a vine maple or myrtle, with irrigation could be successful in a shaded landscape area like the ones in front the units.**

Response: The proposed design of the ground level units along N. Alberta (3) large patios that are separated from the sidewalk by 30 inch tall planters. The planters include a mix of ornamental and evergreen grasses, such as Japanese forest grass, lirioope, and sword fern. These plants range in height from 12 to 24 inches, in conjunction with the height of the planter, as a 42 to 54 inch screen from the sidewalk, providing visual interest for both the residents and pedestrians. See C.34, C.53, App.10.

- **The building as designed does not feel residential and is in need of a more outward expression of the interior use to create connections with the activity on the street. Balconies or Juliettes are successful at doing this.**

Response: The proposed design provides large (6 foot wide by 7 foot 6 inch tall) operable windows in all living spaces. This provides a residential feel to the units, and allows greater natural light into the living spaces. The window frame color was also changed to an adobe color, providing a lighter more residential experience. See C.8-C.13 and App.2-App.8.

- **Additional weather protection via canopies is needed along Williams Street, which is very active as a major pedestrian and bicycle corridor.**

Response: The proposed design includes (3) large canopies along N. Williams outside the community room, and one at the main entry corner that wraps from N. Williams to N. Alberta. See C.8, C.11, App.8.

- **An entrance is needed to access the community room from Williams to help activate this frontage.**

Response: The proposed design includes an entrance from the right-of-way to community room on N. Williams. See C.5.

- **The Williams' corner needs to be as prominent as possible with both entries and canopies.**

Response: The proposed design includes (3) large canopies along N. Williams outside of the community room. The SE corner which is required to house the water/fire rooms provides ground floor walls that will be used for artwork. See C.8, C.11, App.8, App.11.

- **More weather protection and another entrance on Williams would be more beneficial to the public realm than the small narrow landscape areas in front of the community room**.

Response: The proposed design includes (3) large canopies along N. Williams at the community room and provides a direct entrance from N. Williams to the community room. See C.5, C.8, C.11, App.8, App.11.

DAR - SUMMARY OF COMMENTS

- **The above-grade transformer in the parking lot if well screened with landscaping could be satisfactory.**

Response: The above grade transformer will be screened by layered landscaping to at least the L2 standard, with 3 foot height continuous evergreen shrubs and layered plantings. See C.39-C.40

- **Focus on landscaping and seating opportunities in the furnishing zone to extend the use of the right-of-way for community room spill out area.**

Response: The proposed design includes additional covered seating outside the new community room entry, providing additional flexibility to the community room and extend the use of the right-of-way along N. Williams. See C.5, C.49-C.51, and App.11.

QUALITY & PERMANENCE

- **The overall concept of the massing, articulation, and limited quality materials are working well together. Depth in fenestrations and integration of louvers will need to contribute to the successes of the design.**

Response: Exterior insulation is being utilized on the project, allowing window openings to maintain at least 3 1/2 inches of depth. This provides depth across the entire facade. Louvers are integrated within the framework of window openings and side panels. Ground floor louvers are integrated above canopies wherever possible to reduce their visibility. See C.8 through C.13 for elevations and C.24 through C.29 for window and louver details.

- **The high contrast color scheme was noted as being predominant but was more successful than the red brick option on the Alberta volume shared at the meeting. Vibrancy, over color scheme, was noted as being key for the project, which could be part of the exterior at the ground plane or could come from the interior walls.**

Response: A high contrast color scheme is being provided. Materiality around the ground floor includes light storefront, stucco, and t&g cedar siding for warmth. The ground floor at both NW and SE corners of N. Alberta and N. Williams will be used for artwork. These ground floor locations will provide vibrancy in highly visible areas for both the public and residents to enjoy. See C.8 and C.11 elevations for locations of artwork.

- **Ceraclad is a high-quality material, albeit less so than brick. Recommendation to consider smooth finish over grooved for graffiti purposes.**

Response: All fiber cement products have been removed from both N. Alberta and N. Williams street frontages. An acrylic stucco system and t&g cedar are provided in these touch zones and will have anti-graffiti coatings. Where fiber cement material comes down to the ground floor at on-site locations, landscaping has been provided as a buffer. See C.8 through C.13 for elevations.

- **The landscape areas adjacent to the building and within the parking area need more diverse and layered landscaping to block headlights into units, but also maintain sight lines between walkway and parking lot. A shrub layer to 3 feet against parking stall combined with both small and large trees (limbed to 8') will provide screening for the residential units and shade in the parking area.**

Response: Diverse and substantial layered planting of trees, shrubs, and groundcovers will be provided between the parking lot and units to provide screening and privacy to the units while maintaining safe lines of sight. The planting area has been expanded to 5 foot 6 inches to allow room for layered plantings, with an additional 2 foot 6 inch planting bed at the building face. See C.39-C.40.

- **For trees in the parking area, placing them dead center in every other parking space provides good canopy coverage and an area through zone for people to pass from their car over to the walkway.**

Response: Parking area trees will be located thoughtfully with recognition given to the need for maximum shading and efficient circulation while maintaining compliance with the City of Portland's parking lot interior landscaping requirements. See C.39-C.40.

- **The depth of the landscape areas that buffer the parking from the adjacent residential units needs to be more developed with robust, large-scaled plantings.**

Response: The width of planting beds between the building and parking area have been maximized for a total of 8 feet of planting. This is sufficient to provide robust layered planting to screen unit windows from the parking area. Both large and small shrubs such as Japanese holly (42 inch height), flowering Bennet's white rock rose (36 inch height), and evergreen Pacific wax myrtle (up to 72 inch height) will be distributed intentionally to provide an interesting, layered planting that will provide privacy to ground floor units. Provided planting will be diverse and dense, at minimum meeting density provided in the Portland landscape manual P1 interior landscaping requirement, and often exceeding it. Robust evergreen groundcovers are also provided strategically to provide visual relief in planting and to foster a diversity in planting height. See C.39-C.40 and C.52-C.53.

- **Look at the landscape buffer and screening along south property line to ensure it is robust enough to provide privacy to the adjacent property.**

Response: The south property line will be screened to an L3 standard wherever possible, including a 6 foot height evergreen shrubs. Shrub and groundcover planting will fill the remainder of the area between the property line and building face to provide further buffering. See C.39-C.40.

ZONING SUMMARY

PROPERTY ADDRESS	4931-4947 N WILLIAMS AVE / 20 N ALBERTA ST / 106 N ALBERTA ST / 114 N ALBERTA ST
PROPERTY ID	R308855, R639049, R308856, R308873, R308872, R308871
COUNTY	MULTNOMAH
STATE ID	1N1E22AC 1200
ZONING MAP	2530
SITE AREA	40,910 SF (INCLUDES DEDICATION)
LAND USE ZONING	CM2 - COMMERCIAL MIXED USE 2
OVERLAYS	D-DESIGN
COMP PLAN DESIGNATION	MU-U - MIXED USED - URBAN CENTER
PLAN DISTRICT	N/A
DESIGN REVIEW	TYPE II
LOT SIZE (33.130.200)	N/A
BASE FAR (33.130.205)	2.5 to 1
BONUS FAR (33.510.205.C.2.a)	1.5 to 1
MAX FAR W/ BONUS	4 to 1 *MEETS*
BASE HEIGHT (33.130.210.B)	45 FT
BONUS HEIGHT (33.130.212.C)	10 FT
MAX HEIGHT W/ BONUS	55 FT *MEETS*
MIN BLDG SETBACKS (TABLE 130-2)	5FT *MEETS*
MAX BLDG SETBACKS (TABLE 130-2)	10 FT *MEETS*
MAX BLDG COVERAGE (TABLE 130-2)	100% *MEETS*
BLDG LENGTH AND ARTICULATION (33.130.222)	REQUIRED (SEE APP.20) *MEETS*
MIN LANDSCAPED AREA (TABLE 130-2)	15% *MEETS*
LANDSCAPE BUFFER (33.130.215.B.2.b.3)	L3 UP TO 10' (SEE C.39) *MEETS*
TREES (TITLE 11 CH. 11.50)	TREE PLAN REQUIRED
REQUIRED OUTDOOR AREAS (TABLE 130-2)	REQUIRED *MEETS*
GROUND FLOOR WINDOWS (33.130.230.B)	MIN 40% ON N. WILLIAMS AND 25% ON N. ALBERTA GROUND LEVEL WALL AREA OF STREET-FACING FACADES (SEE APP.19) *MEETS*
WINDOWS IN STREET FACING FACADE (33.130.230.A)	MIN 15% (SEE C.8) *MEETS*
SCREENING (33.130.235.C)	L2 SCREENING REQUIRED. EQUIPMENT ON ROOF IS SET BACK FROM ROOF EDGES FACING THE R ZONE 3 FEET FOR EACH FOOT OF HEIGHT OF THE EQUIPMENT. (SEE APP.16) *MEETS*
PEDESTRIAN STANDARDS (33.130.240)	CONNECTION BETWEEN MAIN ENTRY AND ADJACENT STREET REQUIRED, ADDITIONAL CONNECTION NOT REQUIRED SINCE >50% OTHER FACADE IS WITHIN 10 FT OF STREET (SEE SHEET C.4 FOR SIDEWALK DIMENSIONS) *MEETS*
TRANSIT STREET MAIN ENTRANCE (33.130.242)	REQUIRED *MEETS*
MAX PARKING (33.266.115 TABLE 266-2)	1.35 PER UNIT (SEE SHEET C.4) *MEETS*
BIKE PARKING - LONG TERM (33.266.200 TABLE 266-6)	1.5 PER UNIT (113 SPACES) (SEE SHEETS C.5, C.6, AND APP.21) *MEETS*
BIKE PARKING - SHORT TERM (33.266.200 TABLE 266-6)	1 PER 20 UNITS (4 SPACES) (SEE SHEET C.4) *MEETS*

LOADING SPACES (33.266.310.C.1.a)	1 STANDARD B SPACE *MEETS*

TOTAL BUILDING AREA	
LEVEL 01	20,441 SF
LEVEL 02-04	60,228 SF
TOTAL GSF	**80,669 SF**

LU 23-103655 DZ
Exhibit A10

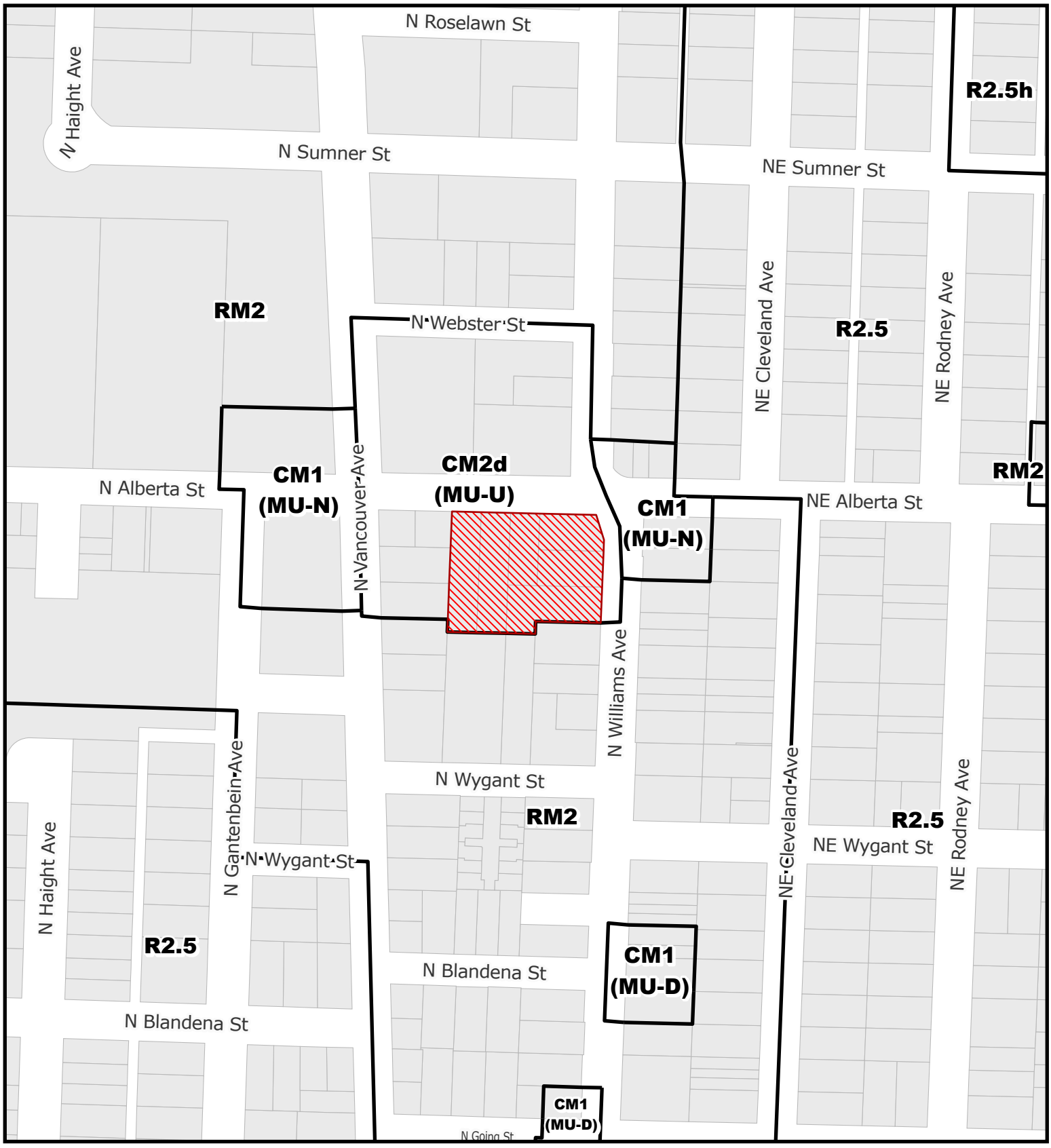

For Zoning Code in Effect Post October 1, 2022

ZONING

Site

File No. LU 23 - 103655 DZ
1/4 Section 2530
Scale 1 inch =200 feet
State ID 1N1E22AC 100
Exhibit B Nov 16, 2023

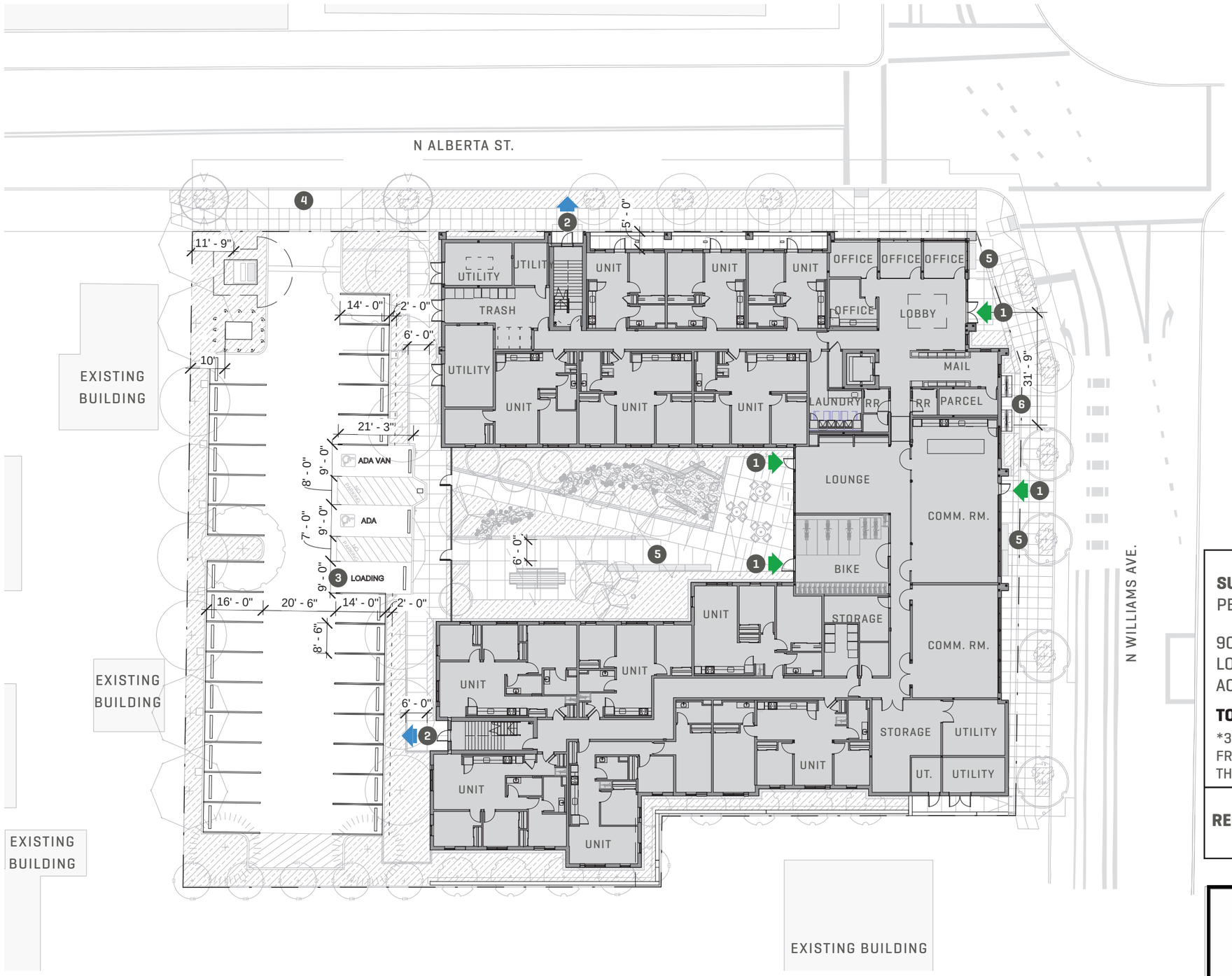

SCALE: 1" = 30' - 0"

0' 15' 30' 60'

N

48' - 2", 4 STORY TYPE 5A CONSTRUCTION

SITE AREA: 41,210 SF

BUILDING FOOTPRINT: 20,920 SF

- PROJECT PROPERTY LINE
1. BUILDING ENTRY
2. EXIT
3. LOADING
4. NEW CURB CUT, REF CIVIL
5. BENCH
6. SHORT-TERM BIKE PARKING (4)

SURFACE PARKING LOT MINIMUM PARKING SPACE DIMENSIONS
PER TABLE 266-4

	PROVIDED
90 DEGREE: 8'-6" WIDTH X 16'-0" DEPTH*	28
LOADING TYPE B: 9'-0" WIDTH X 19'-0" DEPTH	1
ACCESSIBLE: 9'-0" WIDTH X 20'-0" DEPTH	2
TOTAL PROVIDED	**31**

*33.266.130.F.4.a UP TO 2 FEET OF THE FRONT OF THE SPACE AS MEASURED FROM A LINE PARALLEL TO THE DIRECTION OF THE BUMPER OF A VEHICLE USING THE SPACE MAY BE LANDSCAPED AREA.

REQUIRED SHORT-TERM BIKE PARKING: 1 PER 20 UNITS 75 / 20 = 4
PROVIDED: 4

Approved
City of Portland
Bureau of Development Services

Planner _____

Date 02-07-2024

* This approval applies only to the reviews requested and is subject to all conditions of approval. Additional zoning requirements may apply.

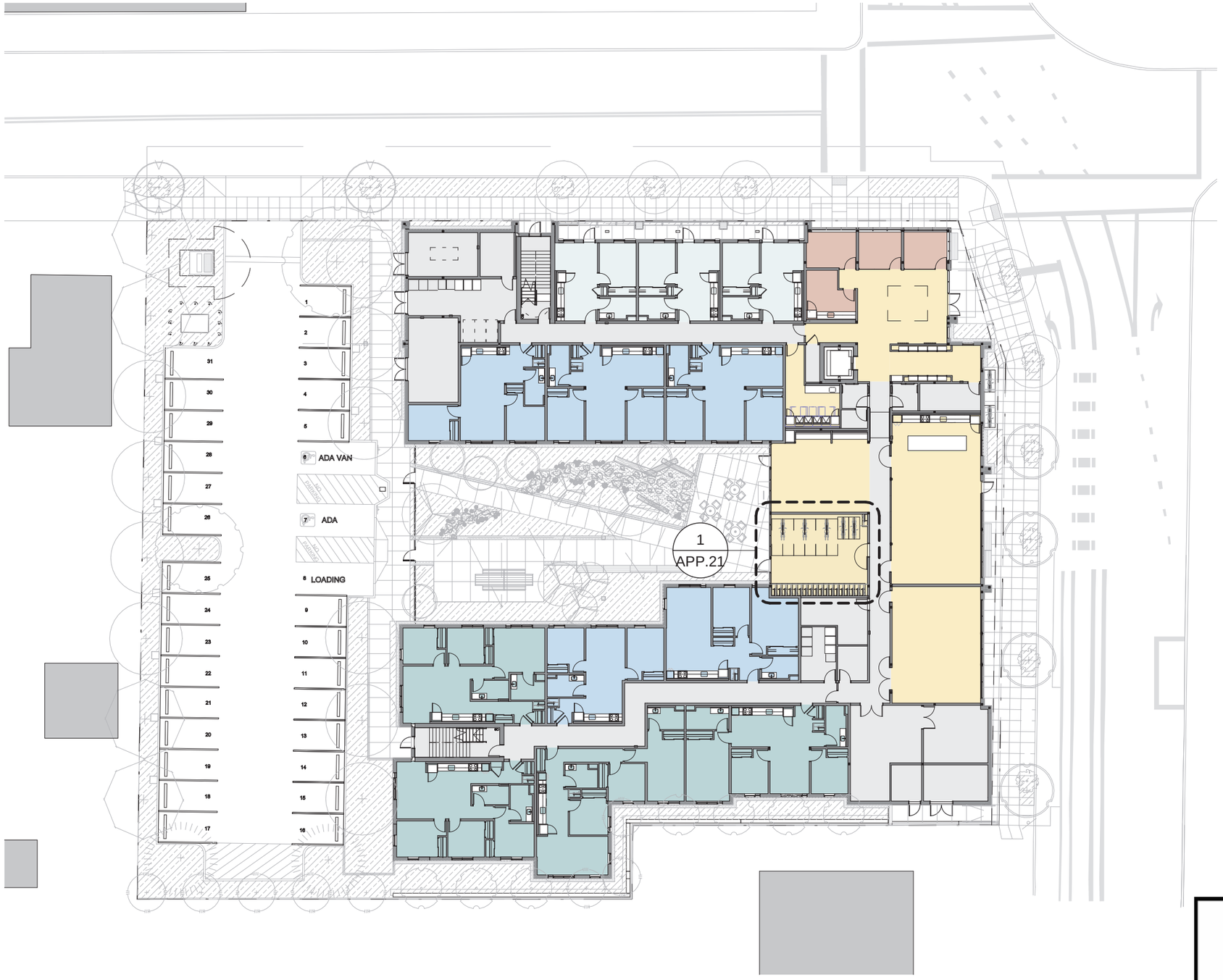

LEGEND

- 1-BEDROOM
- 2-BEDROOM
- 3-BEDROOM
- AMENITY SPACES
- OFFICE
- MECH / B.O.H. / CIRC.

SCALE: 1" = 30' - 0"

0' 15' 30' 60'

N

Approved
City of Portland
Bureau of Development Services
Planner
Date 02-07-2024
*This approval applies only to the reviews requested and is subject to all conditions of approval. Additional zoning requirements may apply.

© 2023 HOLST ARCHITECTURE INC.

HOLST

STRONG PROPERTY
4931-4947 N WILLIAMS AVE
PORTLAND, OR 97217

DESIGN REVIEW
01.30.2024

title : LEVEL 01 FLOOR PLAN
LU NO. 23-103655 DZM
sheet : C.5

LU 23-103655 DZ Exhibit C.2

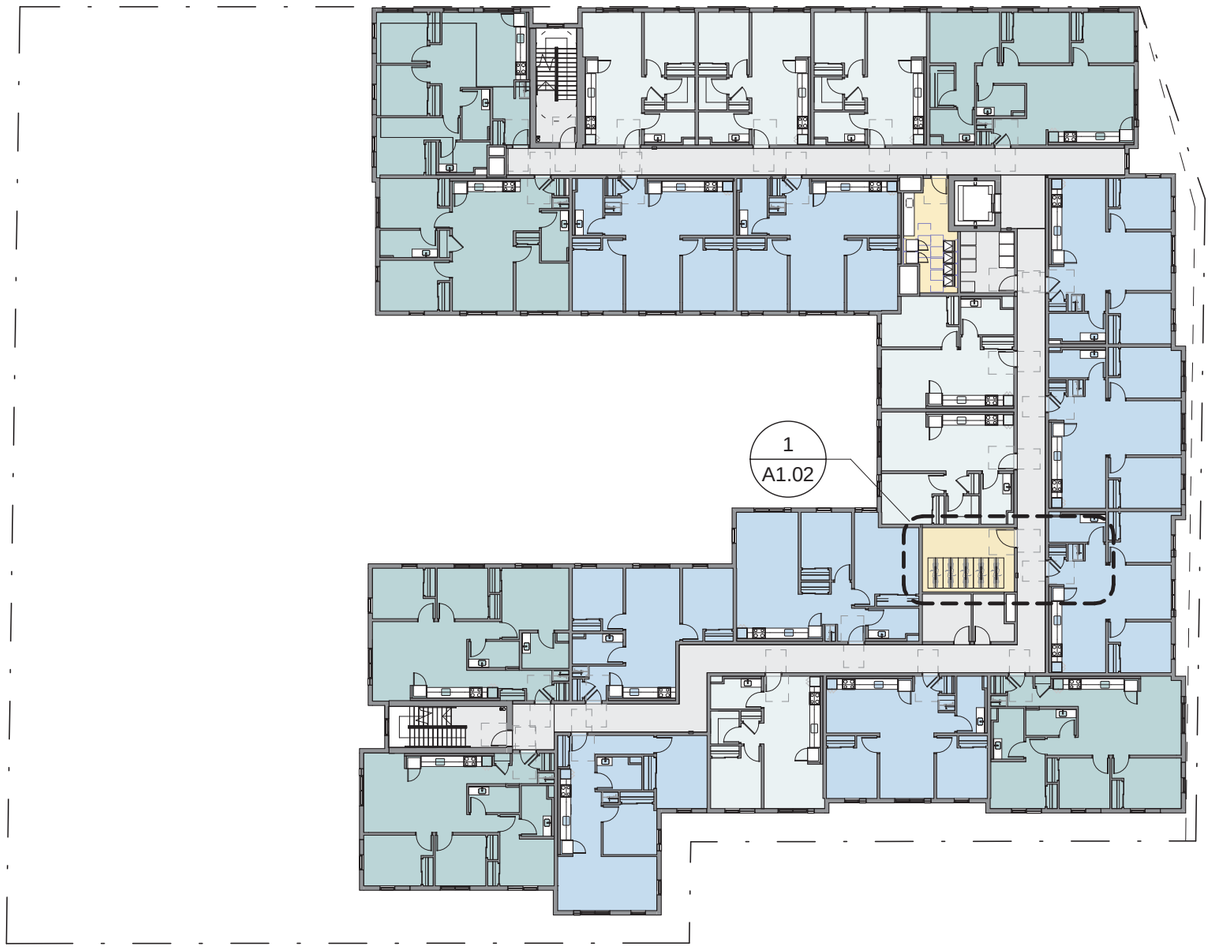

LEGEND

- 1-BEDROOM
- 2-BEDROOM
- 3-BEDROOM
- AMENITY SPACES
- OFFICE
- MECH / B.O.H. / CIRC.

SCALE: 1" = 30' - 0"

0' 15' 30' 60'

N

Approved
City of Portland
Bureau of Development Services
Planner _____
Date 02-07-2024
* This approval applies only to the reviews requested and is subject to all conditions of approval. Additional zoning requirements may apply.

HOLST

© 2023 HOLST ARCHITECTURE INC.

STRONG PROPERTY
4931-4947 N WILLIAMS AVE
PORTLAND, OR 97217

DESIGN REVIEW
01.30.2024

title : LEVEL 01 FLOOR PLAN
LU NO. 23-103655 DZM
sheet : C.6

LU 23-103655 DZ Exhibit C.3

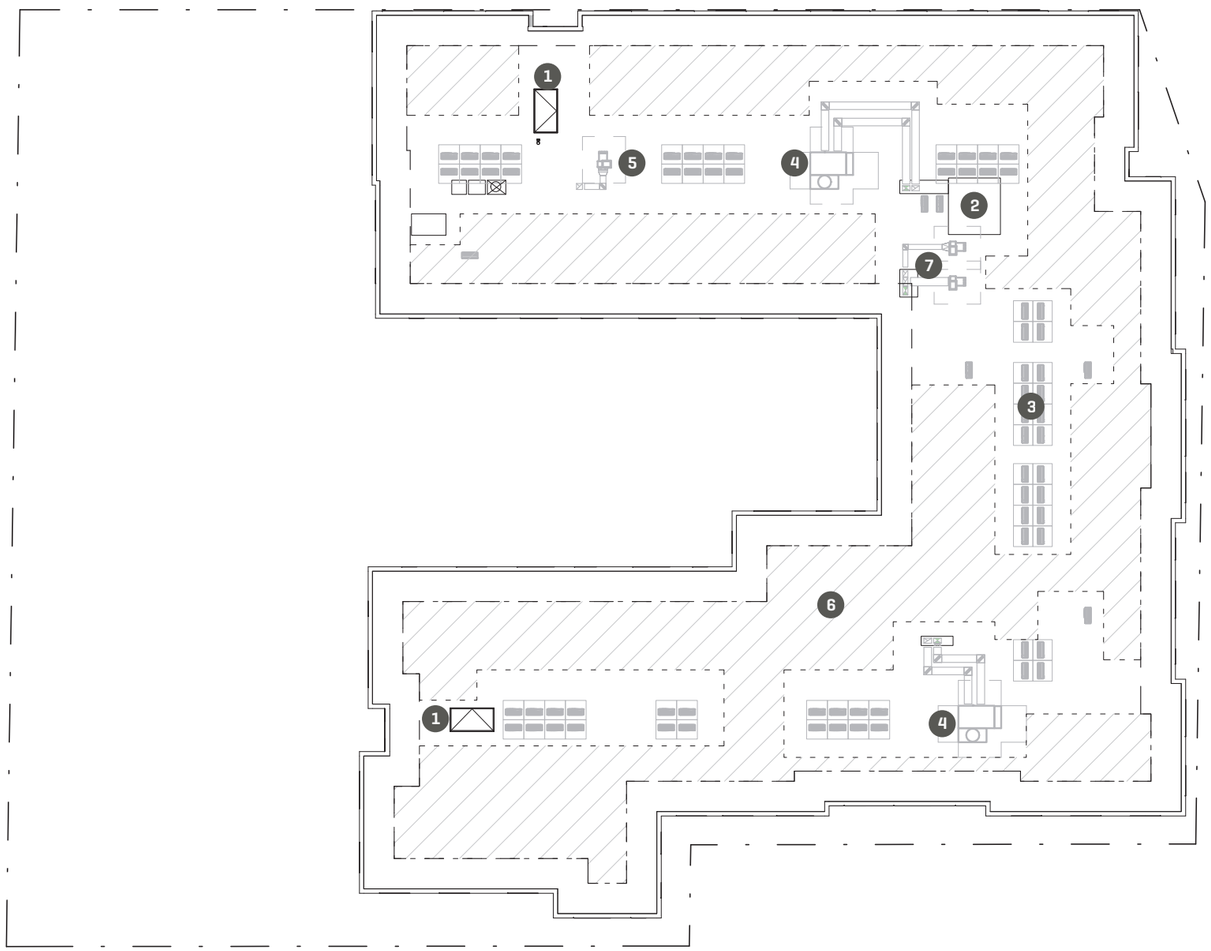

1. ROOF ACCESS HATCH
2. ELEVATOR OVERRUN
3. HEAT PUMP CONDENSING UNITS
4. DEDICATED OUTDOOR AIR SYSTEM
5. EXHAUST FAN
6. AREA FOR FUTURE PV PANELS (HATCHED)
7. LAUNDRY MAKE-UP AIR

SCALE: 1" = 30' - 0"

N

0' 15' 30' 60'

Approved
City of Portland
Bureau of Development Services
Planner _____
Date 02-07-2024
*This approval applies only to the reviews requested and is subject to all conditions of approval. Additional zoning requirements may apply.

HOLST

© 2023 HOLST ARCHITECTURE INC.

STRONG PROPERTY
4931-4947 N WILLIAMS AVE
PORTLAND, OR 97217

DESIGN REVIEW
01.30.2024

title : ROOF PLAN
LU NO. 23-103655 DZM
sheet : C.7

LU 23-103655 DZ Exhibit C.4

NORTH ELEVATION
1" = 20'-0"

GLAZING PERCENTAGE: 1,855 SF / 7,672 SF = **24%**
TOTAL FACADE AREA: **7,672 SF** , TOTAL GLAZED AREA: **1,855 SF**

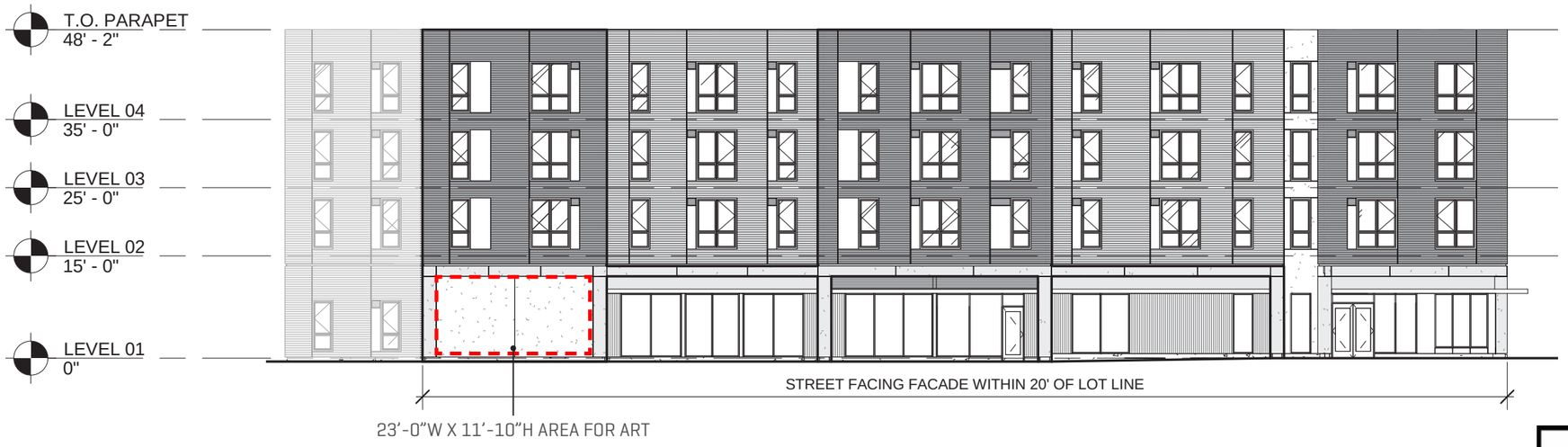

EAST ELEVATION
1" = 20'-0"

GLAZING PERCENTAGE: 2,110 SF / 7,644 SF = **27%**
TOTAL FACADE AREA: **7,644 SF** , TOTAL GLAZED AREA: **2,110 SF**

0' 10' 20' 40'

Approved
City of Portland
Bureau of Development Services
Planner _____
Date 02-07-2024
* This approval applies only to the reviews requested and is subject to all conditions of approval. Additional zoning requirements may apply.

HOLST

© 2023 HOLST ARCHITECTURE INC.

STRONG PROPERTY
4931-4947 N WILLIAMS AVE
PORTLAND, OR 97217

DESIGN REVIEW
01.30.2024

title : BUILDING ELEVATIONS
LU NO. 23-103655 DZM
sheet : C.8

LU 23-103655 DZ Exhibit C.5

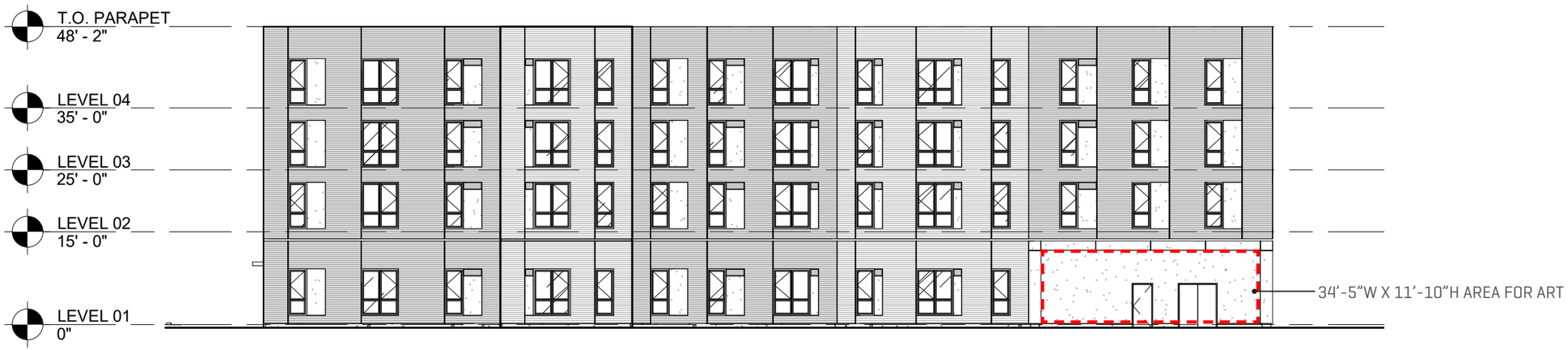

SOUTH ELEVATION
1" = 20'-0"

WEST ELEVATION
1" = 20'-0"

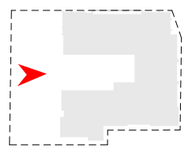

Approved
City of Portland
Bureau of Development Services
Planner
Date 02-07-2024
* This approval applies only to the reviews requested and is subject to all conditions of approval. Additional zoning requirements may apply.

HOLST

© 2023 HOLST ARCHITECTURE INC.

STRONG PROPERTY
4931-4947 N WILLIAMS AVE
PORTLAND, OR 97217

DESIGN REVIEW
01.30.2024

title : BUILDING ELEVATIONS
LU NO. 23-103655 DZM
sheet : C.9

LU 23-103655 DZ Exhibit C.6

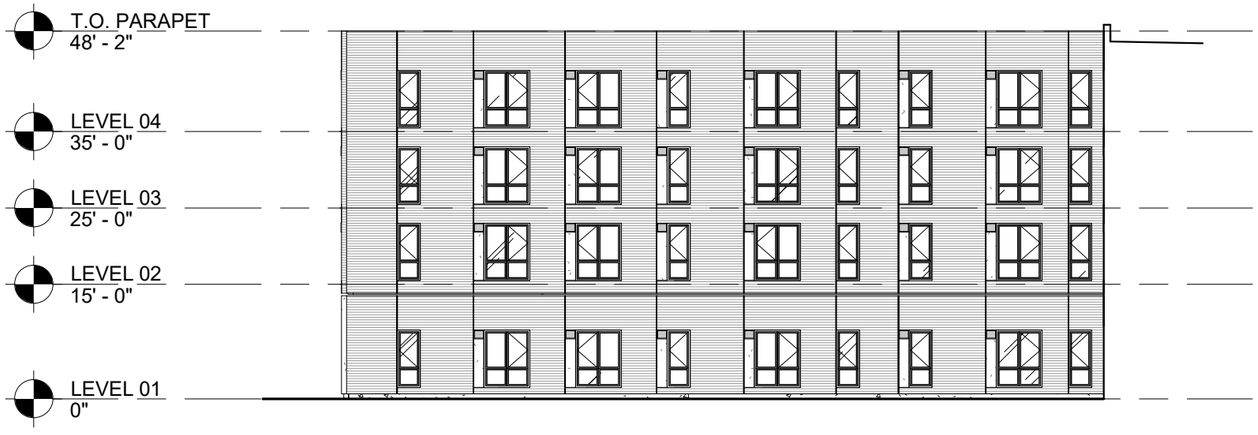

COURTYARD ELEVATION
1" = 20'-0"

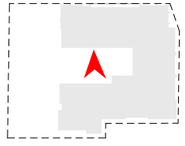

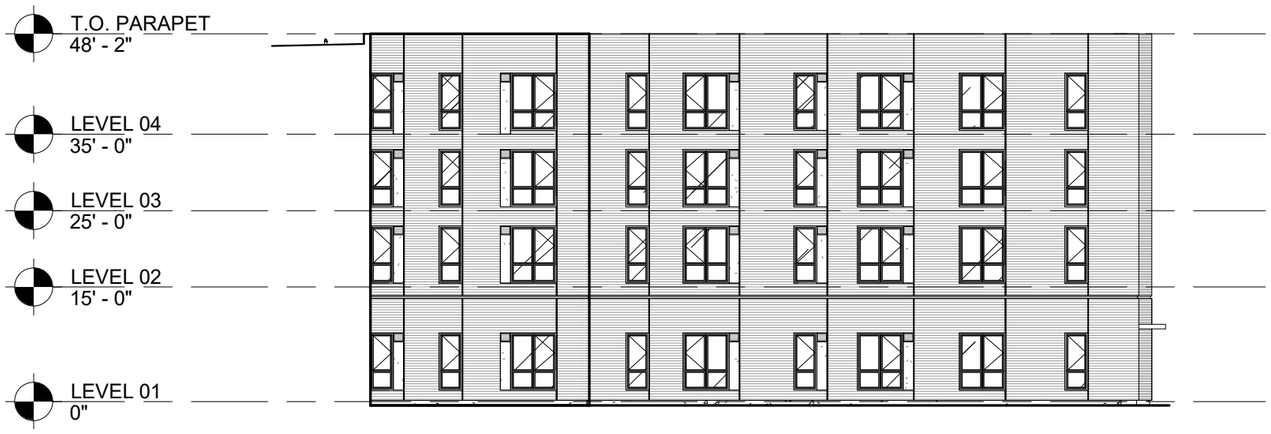

COURTYARD ELEVATION
1" = 20'-0"

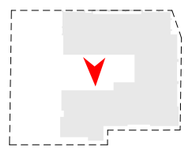

Approved
City of Portland
Bureau of Development Services
Planner _____
Date 02-07-2024
* This approval applies only to the reviews requested and is subject to all conditions of approval. Additional zoning requirements may apply.

HOLST

© 2023 HOLST ARCHITECTURE INC.

STRONG PROPERTY
4931-4947 N WILLIAMS AVE
PORTLAND, OR 97217

DESIGN REVIEW
01.30.2024

title : BUILDING ELEVATIONS
LU NO. 23-103655 DZM
sheet : C.10

LU 23-103655 DZ Exhibit C.7

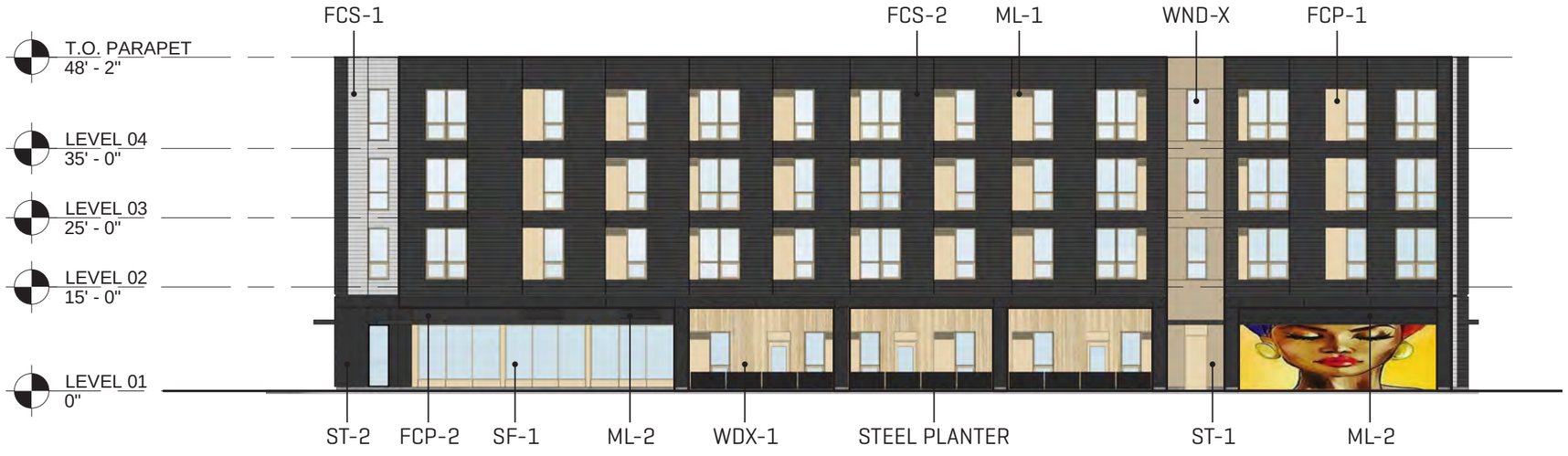

NORTH ELEVATION
1" = 20'-0"

*ART SHOWN FOR LOCATION ONLY (NOT ACTUAL DESIGN)

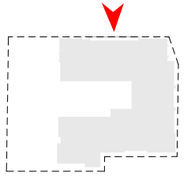

EAST ELEVATION
1" = 20'-0"

*ART SHOWN FOR LOCATION ONLY (NOT ACTUAL DESIGN)

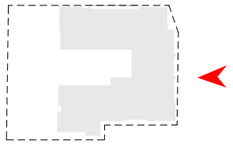

FCP-1
FIBER CEMENT PANEL - SMOOTH - ADOBE

FCP-2
FIBER CEMENT PANEL - SMOOTH - DARK

FCS-1
FIBER CEMENT SIDING - LAP - LIGHT

FCS-2
FIBER CEMENT SIDING - LAP - DARK

ML-1
METAL LOUVER - ADOBE

ML-2
METAL LOUVER - DARK

MF-X
CUSTOM COLOR METAL FLASHING

SF-1
ALUMINUM STOREFRONT AND ENTRANCES

WND-X
VINYL WINDOW

WDX-1
T&G CEDAR SIDING

CONC-1
SMOOTH FINISH CONCRETE

MP-1
CUSTOM COLOR PLATE STEEL CANOPY

ST-1
STUCCO - ADOBE

ST-2
STUCCO - DARK

Approved
City of Portland
Bureau of Development Services

Planner _____

Date 02-07-2024

* This approval applies only to the reviews requested and is subject to all conditions of approval. Additional zoning requirements may apply.

HOLST

© 2023 HOLST ARCHITECTURE INC.

STRONG PROPERTY
4931-4947 N WILLIAMS AVE
PORTLAND, OR 97217

DESIGN REVIEW
01.30.2024

title : BUILDING ELEVATIONS
LU NO. 23-103655 DZM
sheet : C.11

LU 23-103655 DZ Exhibit C.8

SOUTH ELEVATION
1" = 20'-0"

*ART SHOWN FOR LOCATION ONLY (NOT ACTUAL DESIGN)

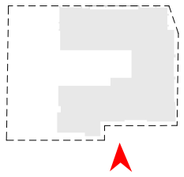

WEST ELEVATION
1" = 20'-0"

*ART SHOWN FOR LOCATION ONLY (NOT ACTUAL DESIGN)

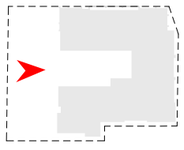

FCP-1
FIBER CEMENT PANEL - SMOOTH - ADOBE

FCP-2
FIBER CEMENT PANEL - SMOOTH - DARK

FCS-1
FIBER CEMENT SIDING - LAP - LIGHT

FCS-2
FIBER CEMENT SIDING - LAP - DARK

ML-1
METAL LOUVER - ADOBE

ML-2
METAL LOUVER - DARK

MF-X
CUSTOM COLOR METAL FLASHING

SF-1
ALUMINUM STOREFRONT AND ENTRANCES

WND-X
VINYL WINDOW

WDX-1
T&G CEDAR SIDING

CONC-1
SMOOTH FINISH CONCRETE

MP-1
CUSTOM COLOR PLATE STEEL CANOPY

ST-1
STUCCO - ADOBE

ST-2
STUCCO - DARK

Approved
City of Portland
Bureau of Development Services
Planner _____
Date 02-07-2024
*This approval applies only to the reviews requested and is subject to all conditions of approval. Additional zoning requirements may apply.

HOLST
© 2023 HOLST ARCHITECTURE INC.

STRONG PROPERTY
4931-4947 N WILLIAMS AVE
PORTLAND, OR 97217

DESIGN REVIEW
01.30.2024

title : BUILDING ELEVATIONS
LU NO. 23-103655 DZM
sheet : C.12

COURTYARD ELEVATION
1" = 20'-0"

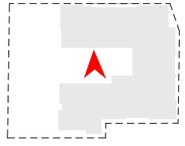

COURTYARD ELEVATION
1" = 20'-0"

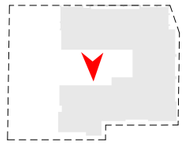

FCP-1
FIBER CEMENT PANEL - SMOOTH - ADOBE

FCP-2
FIBER CEMENT PANEL - SMOOTH - DARK

FCS-1
FIBER CEMENT SIDING - LAP - LIGHT

FCS-2
FIBER CEMENT SIDING - LAP - DARK

ML-1
METAL LOUVER - ADOBE

ML-2
METAL LOUVER - DARK

MF-X
CUSTOM COLOR METAL FLASHING

SF-1
ALUMINUM STOREFRONT AND ENTRANCES

WND-X
VINYL WINDOW

WDX-1
T&G CEDAR SIDING

CONC-1
SMOOTH FINISH CONCRETE

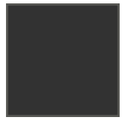

MP-1
CUSTOM COLOR PLATE STEEL CANOPY

ST-1
STUCCO - ADOBE

ST-2
STUCCO - DARK

Approved
City of Portland
Bureau of Development Services
Planner _____
Date 02-07-2024
*This approval applies only to the reviews requested and is subject to all conditions of approval. Additional zoning requirements may apply.

HOLST

© 2023 HOLST ARCHITECTURE INC.

STRONG PROPERTY
4931-4947 N WILLIAMS AVE
PORTLAND, OR 97217

DESIGN REVIEW
01.30.2024

title : BUILDING ELEVATIONS
LU NO. 23-103655 DZM
sheet : C.13

LU 23-103655 DZ Exhibit C.10

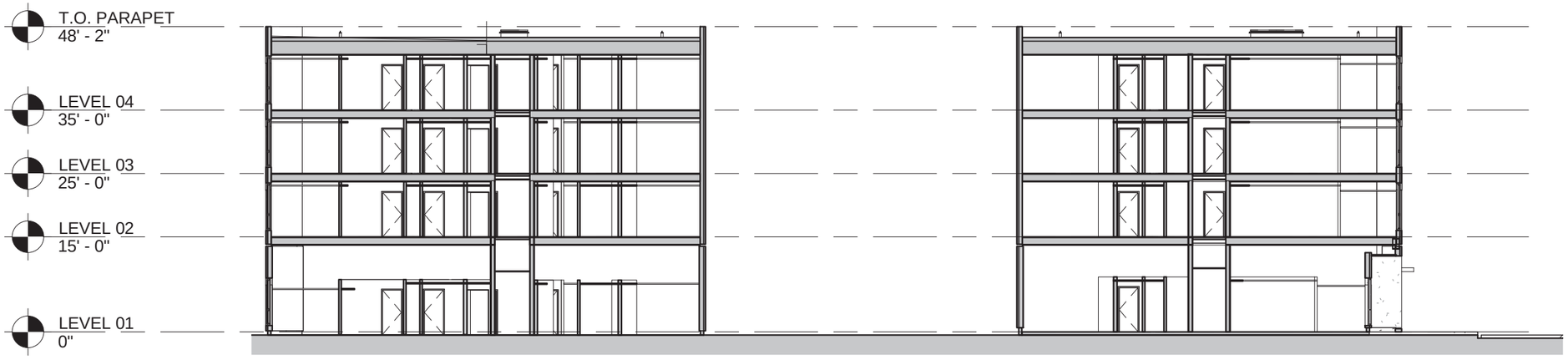

N/S SECTION
1" = 20'-0"

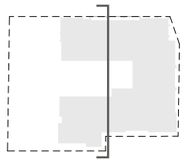

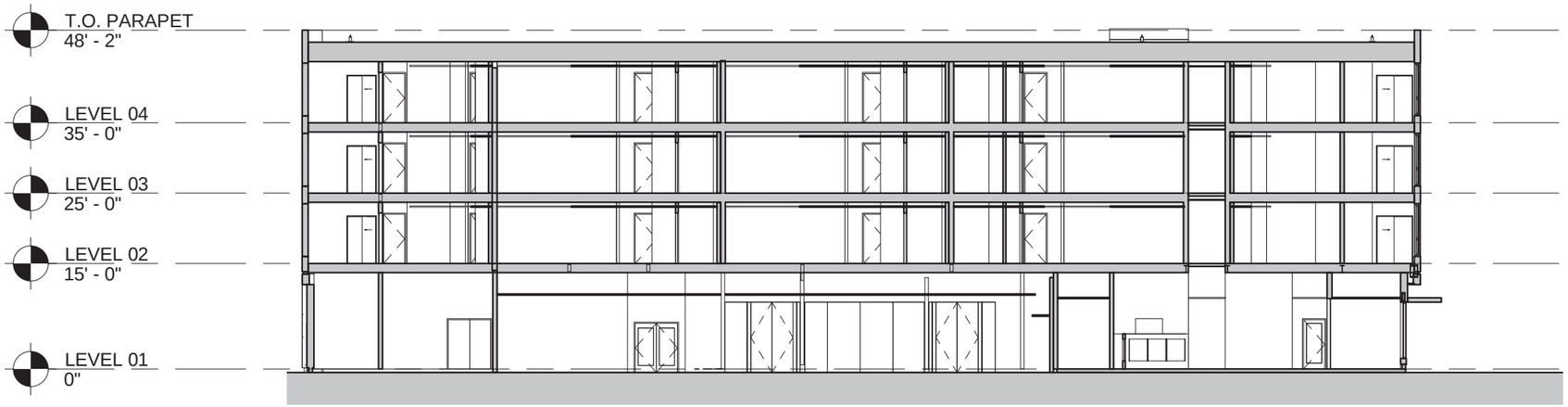

N/S SECTION
1" = 20'-0"

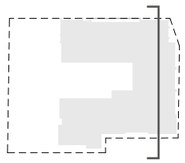

SCALE: 1" = 20' - 0"

0' 10' 20' 40'

Approved
City of Portland
Bureau of Development Services

Planner _____

Date 02-07-2024

*This approval applies only to the reviews requested and is subject to all conditions of approval. Additional zoning requirements may apply.

HOLST

© 2023 HOLST ARCHITECTURE INC.

STRONG PROPERTY
4931-4947 N WILLIAMS AVE
PORTLAND, OR 97217

DESIGN REVIEW
01.30.2024

title : BUILDING SECTIONS

LU NO. 23-103655 DZM

sheet : C.14

LU 23-103655 DZ Exhibit C.11

E/W SECTION
1" = 20'-0"

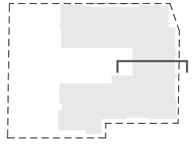

E/W SECTION
1" = 20'-0"

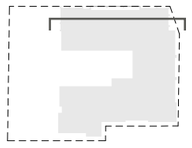

SCALE: 1" = 20' - 0"

0' 10' 20' 40'

Approved
City of Portland
Bureau of Development Services
Planner
Date 02-07-2024
*This approval applies only to the reviews requested and is subject to all conditions of approval. Additional zoning requirements may apply.

HOLST

© 2023 HOLST ARCHITECTURE INC.

STRONG PROPERTY
4931-4947 N WILLIAMS AVE
PORTLAND, OR 97217

DESIGN REVIEW
01.30.2024

title : BUILDING SECTIONS
LU NO. 23-103655 DZM
sheet : C.15

LU 23-103655 DZ Exhibit C.12

② ENLARGED ELEVATION AT MAIN ENTRY
Scale 1" = 10'-0"

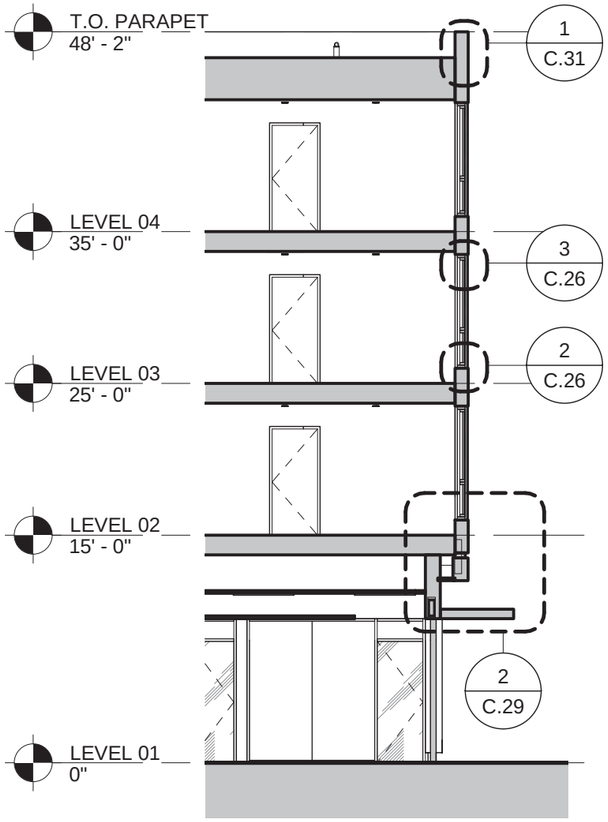

③ WALL SECTION AT MAIN ENTRY
Scale 1" = 10'-0"

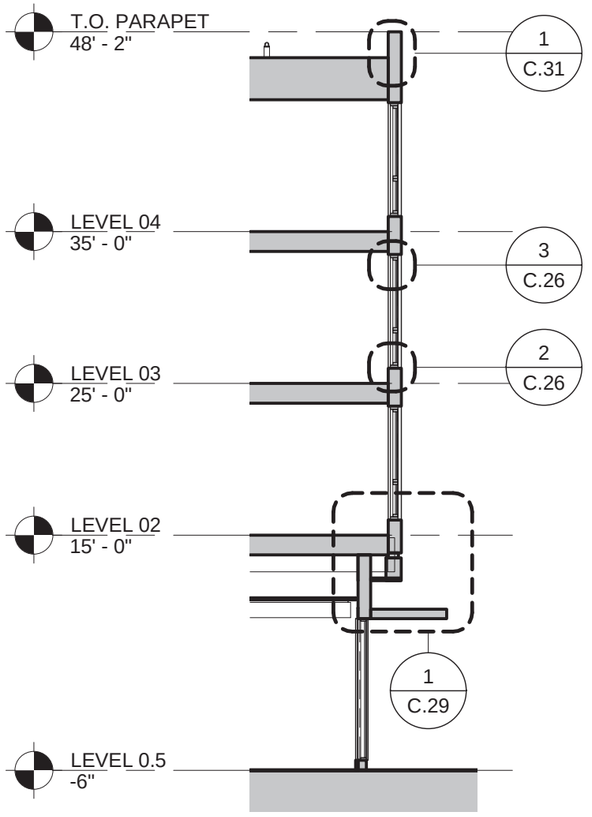

④ WALL SECTION AT MAIN ENTRY
Scale 1" = 10'-0"

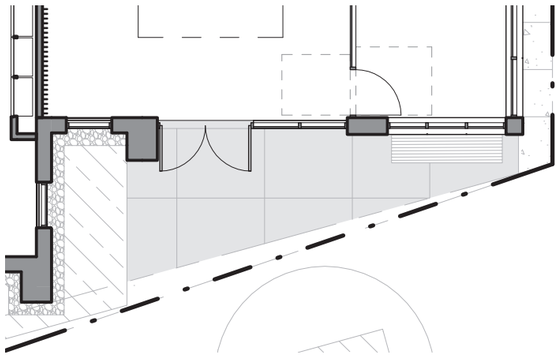

① ENLARGED PLAN AT MAIN ENTRY
Scale 1" = 10'-0"

Approved
City of Portland
Bureau of Development Services
Planner _____
Date 02-07-2024
* This approval applies only to the reviews requested and is subject to all conditions of approval. Additional zoning requirements may apply.

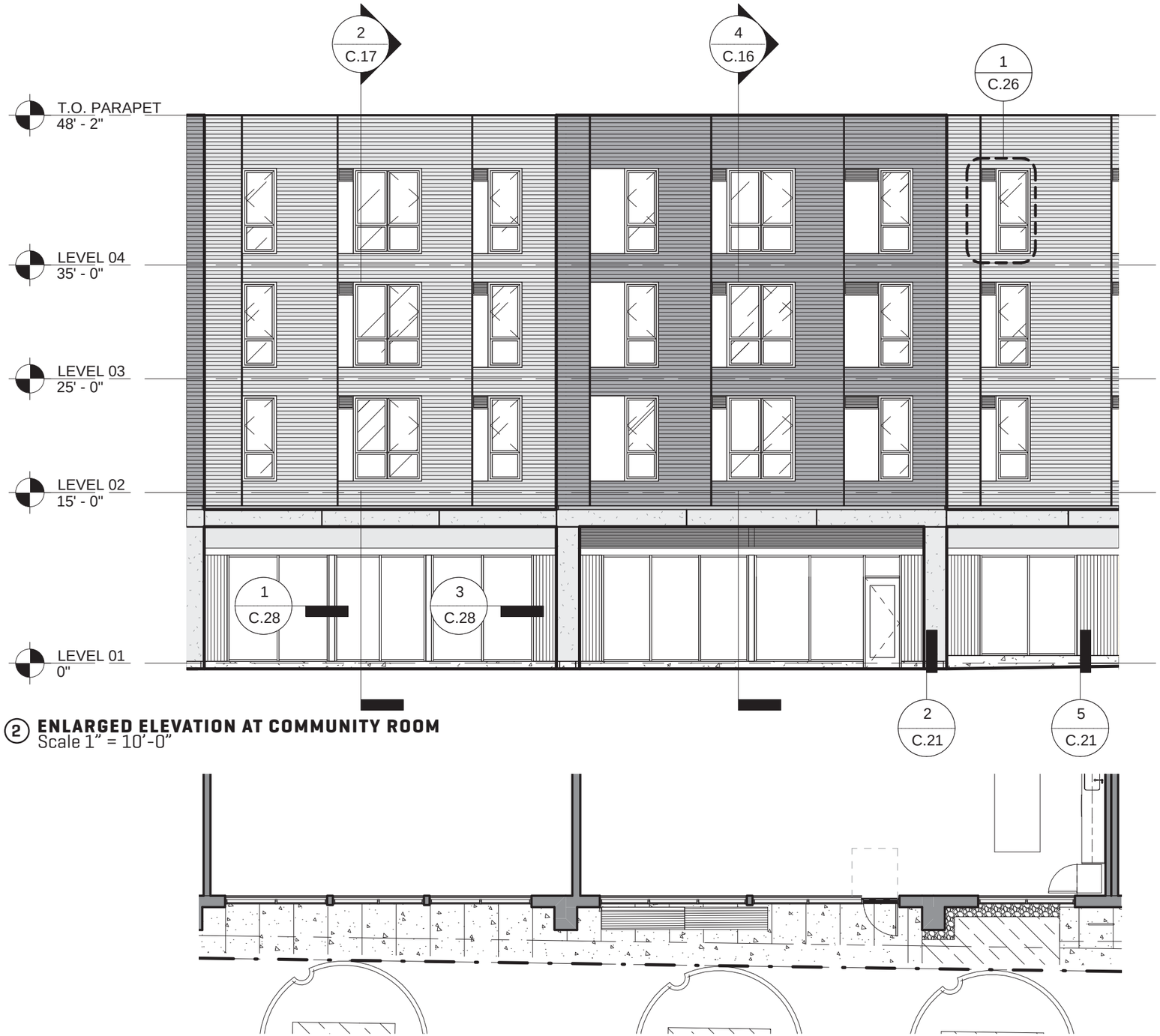

② ENLARGED ELEVATION AT COMMUNITY ROOM
Scale 1" = 10'-0"

① ENLARGED PLAN AT COMMUNITY ROOM
Scale 1" = 10'-0"

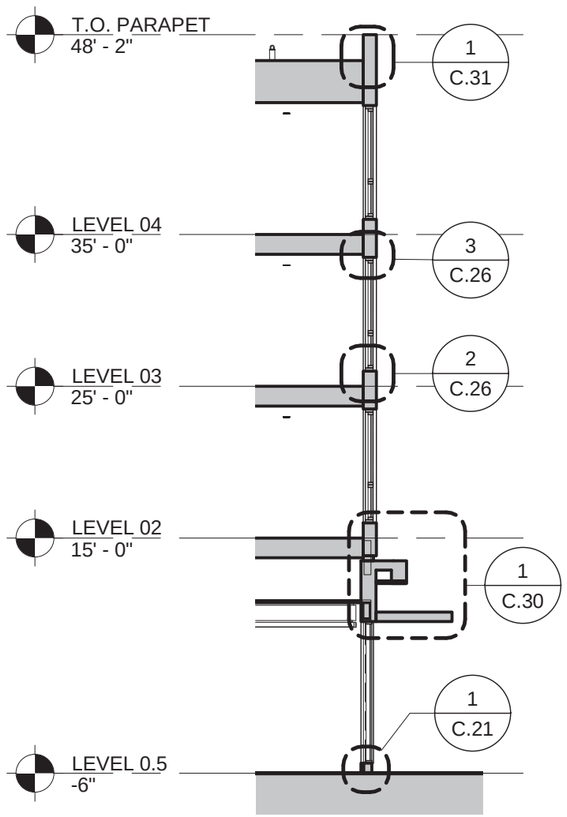

③ WALL SECTION AT COMMUNITY ROOM
Scale 1" = 10'-0"

Approved
City of Portland
Bureau of Development Services

Planner _____

Date 02-07-2024

* This approval applies only to the reviews requested and is subject to all conditions of approval. Additional zoning requirements may apply.

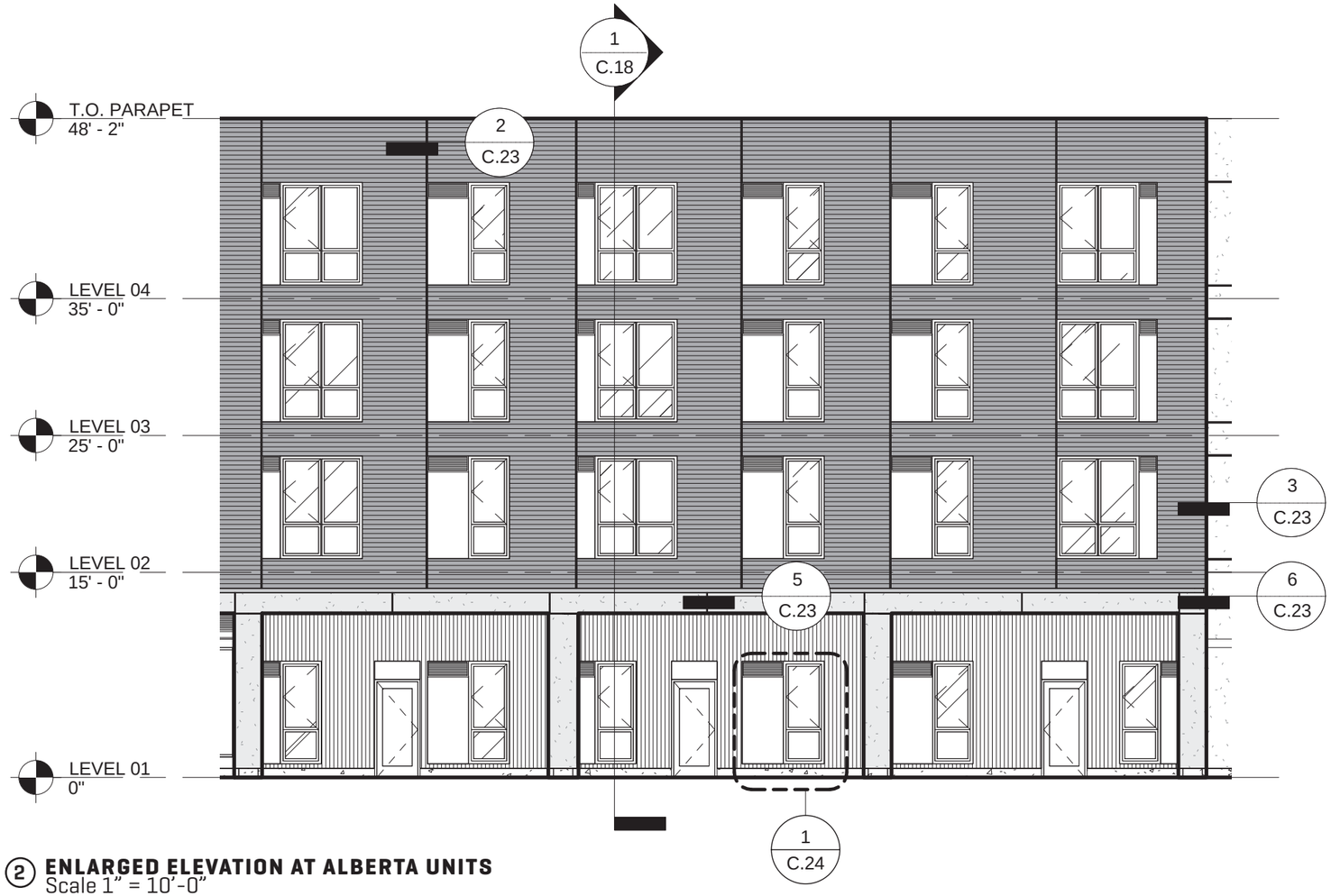

② ENLARGED ELEVATION AT ALBERTA UNITS
Scale 1" = 10'-0"

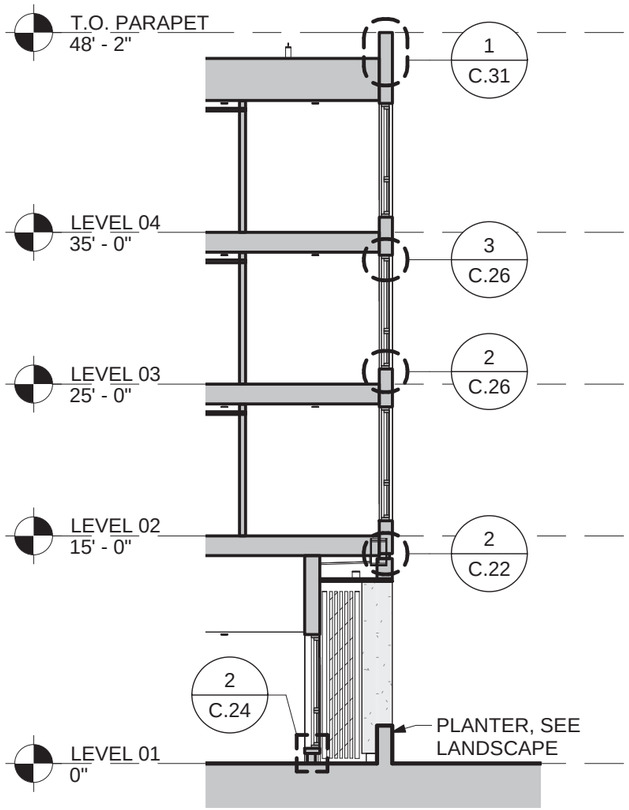

③ WALL SECTION AT ALBERTA UNITS
Scale 1" = 10'-0"

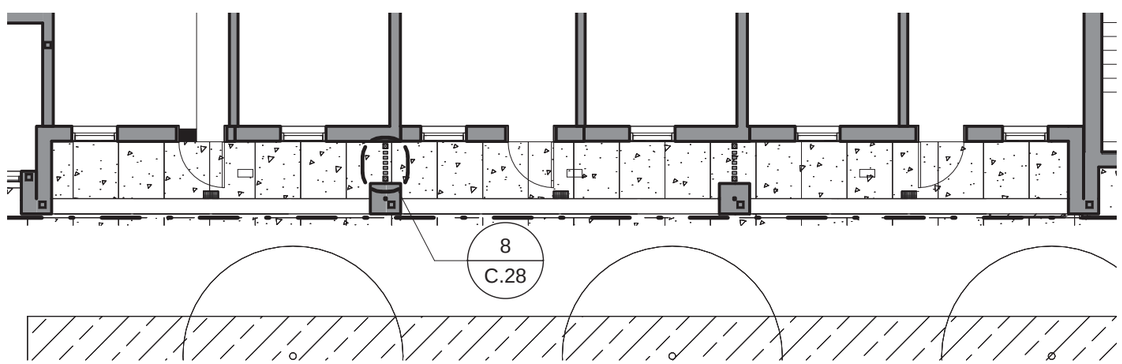

① ENLARGED PLAN AT ALBERTA UNITS
Scale 1" = 10'-0"

Approved
City of Portland
Bureau of Development Services
Planner
Date 02-07-2024
* This approval applies only to the reviews requested and is subject to all conditions of approval. Additional zoning requirements may apply.

© 2023 HOLST ARCHITECTURE INC.

HOLST

STRONG PROPERTY
4931-4947 N WILLIAMS AVE
PORTLAND, OR 97217

DESIGN REVIEW
01.30.2024

title : ENLARGED MAIN ENTRY
LU NO. 23-103655 DZM
sheet : C.18

LU 23-103655 DZ Exhibit C.15

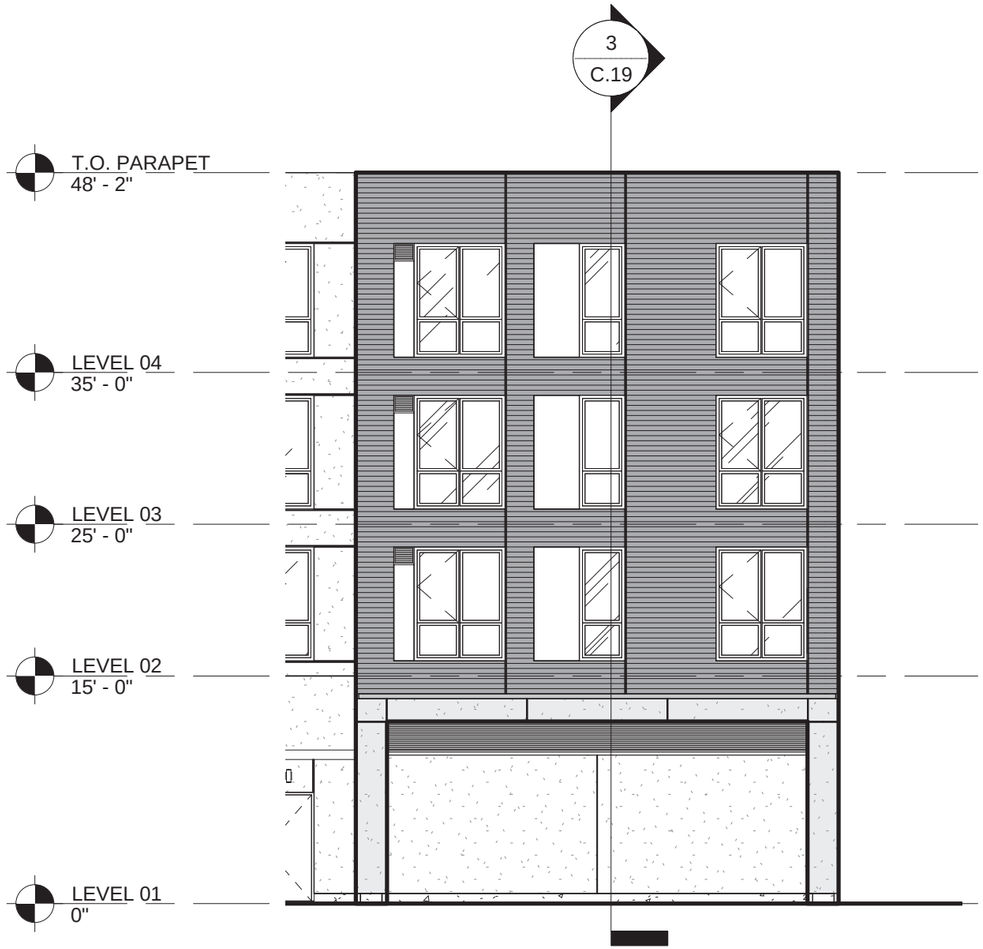

② ENLARGED ELEVATION AT ALBERTA MURAL
Scale 1" = 10'-0"

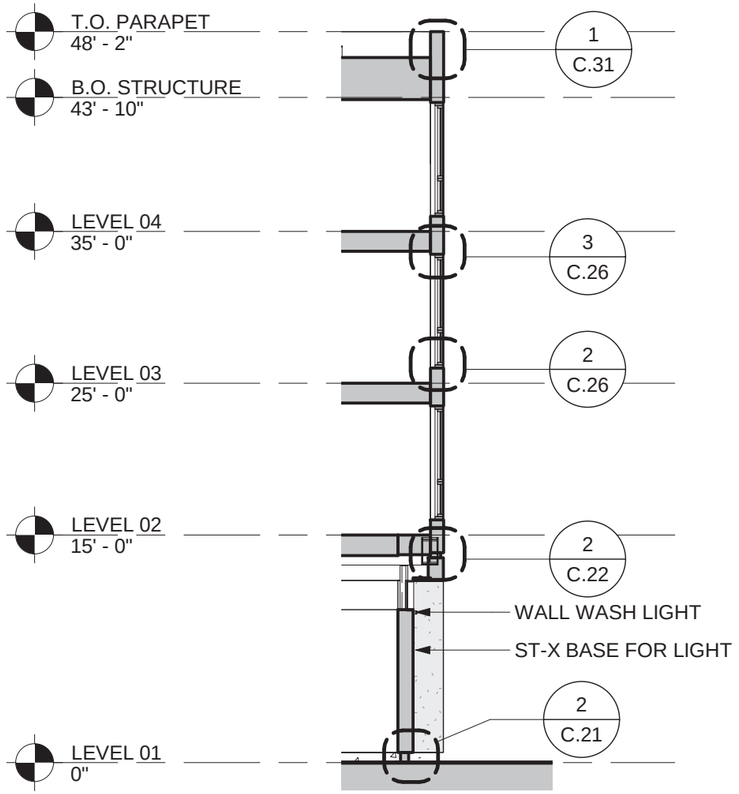

③ WALL SECTION AT ALBERTA MURAL
Scale 1" = 10'-0"

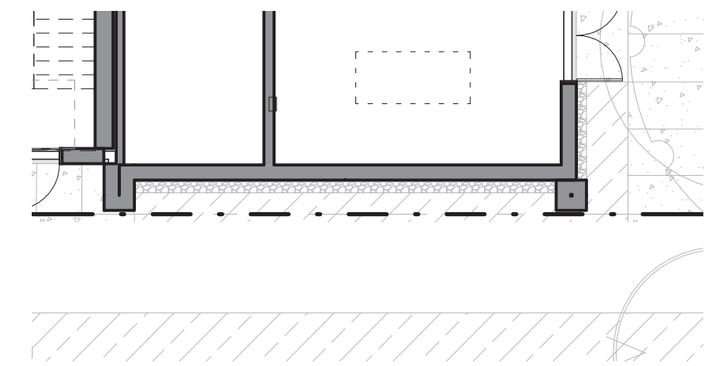

① ENLARGED PLAN AT ALBERTA MURAL
Scale 1" = 10'-0"

Approved
City of Portland
Bureau of Development Services
Planner _____
Date 02-07-2024
* This approval applies only to the reviews requested and is subject to all conditions of approval. Additional zoning requirements may apply.

HOLST

© 2023 HOLST ARCHITECTURE INC.

STRONG PROPERTY
4931-4947 N WILLIAMS AVE
PORTLAND, OR 97217

DESIGN REVIEW
01.30.2024

title : ENLARGED MAIN ENTRY
LU NO. 23-103655 DZM
sheet : C.19

LU 23-103655 DZ Exhibit C.16

② ENLARGED ELEVATION AT ALBERTA UNITS
Scale 1" = 10'-0"

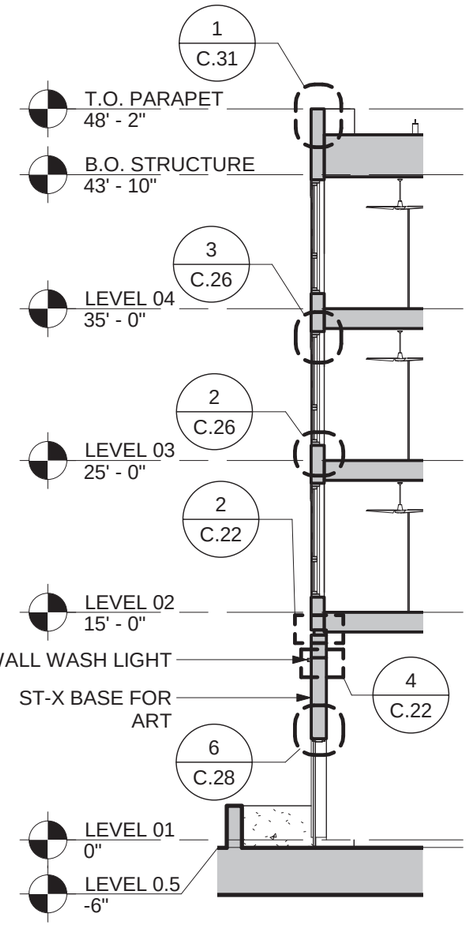

③ WALL SECTION AT ALBERTA UNITS
Scale 1" = 10'-0"

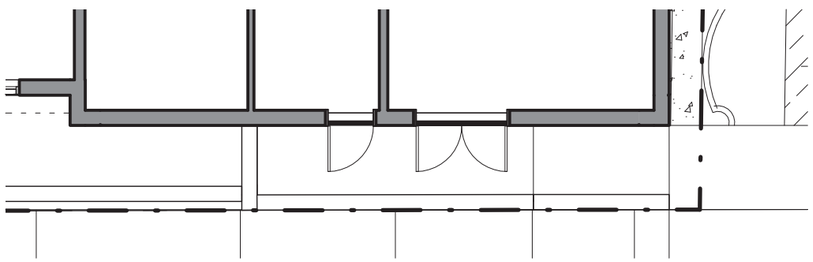

① ENLARGED PLAN AT ALBERTA UNITS
Scale 1" = 10'-0"

Approved
City of Portland
Bureau of Development Services
Planner _____
Date 02-07-2024
*This approval applies only to the reviews requested and is subject to all conditions of approval. Additional zoning requirements may apply.

HOLST

© 2023 HOLST ARCHITECTURE INC.

STRONG PROPERTY
4931-4947 N WILLIAMS AVE
PORTLAND, OR 97217

DESIGN REVIEW
01.30.2024

title : ENLARGED MAIN ENTRY
LU NO. 23-103655 DZM
sheet : C.20

LU 23-103655 DZ Exhibit C.17

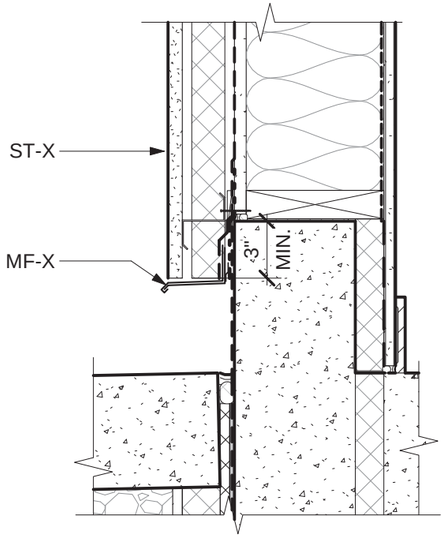

② WALL BASE DETAIL AT ST-X
Scale 1 1/2" = 1'-0"

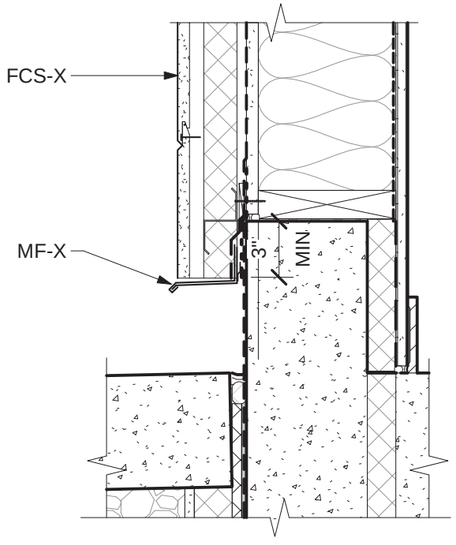

④ WALL BASE DETAIL AT FCS-X
Scale 1 1/2" = 1'-0"

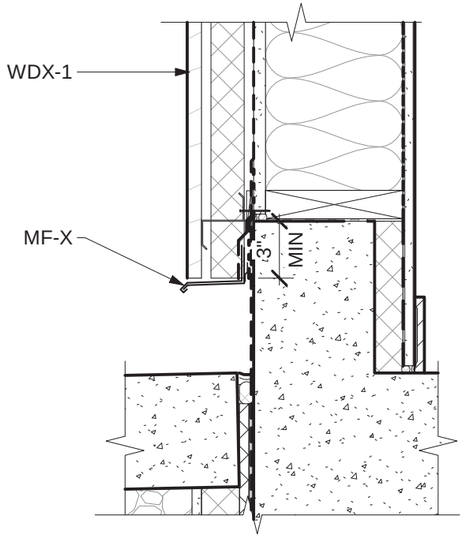

⑤ WALL BASE DETAIL AT WDX-1
Scale 1 1/2" = 1'-0"

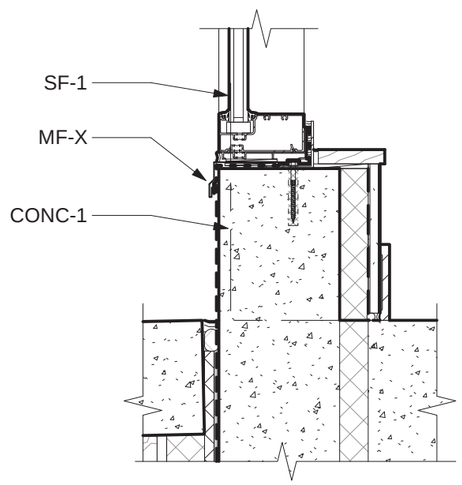

① WALL BASE DETAIL AT SF-X
Scale 1 1/2" = 1'-0"

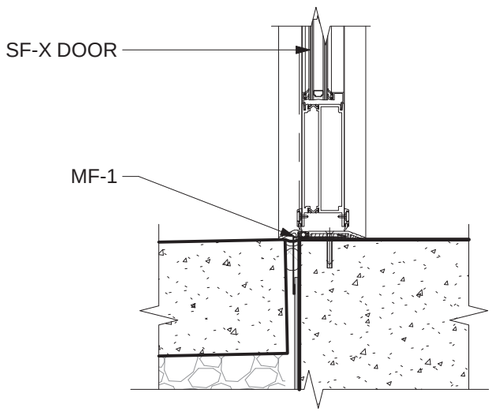

③ SF-X DOOR SILL DETAIL
Scale 1 1/2" = 1'-0"

Approved
City of Portland
Bureau of Development Services
Planner _____
Date 02-07-2024
* This approval applies only to the reviews requested and is subject to all conditions of approval. Additional zoning requirements may apply.

© 2023 HOLST ARCHITECTURE INC.

STRONG PROPERTY
4931-4947 N WILLIAMS AVE
PORTLAND, OR 97217

DESIGN REVIEW
01.30.2024

title : DETAILS
LU NO. 23-103655 DZM
sheet : C.21

LU 23-103655 DZ Exhibit C.18

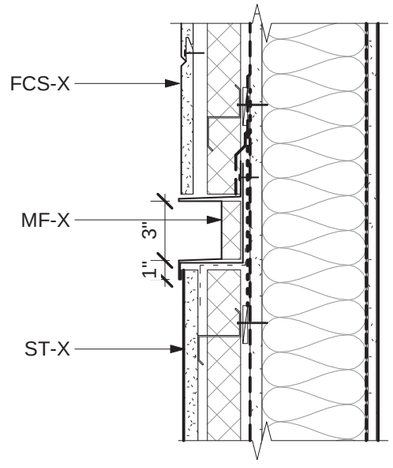

② MF-X HORZ. REVEAL FCS TO ST-X
Scale 1 1/2" = 1'-0"

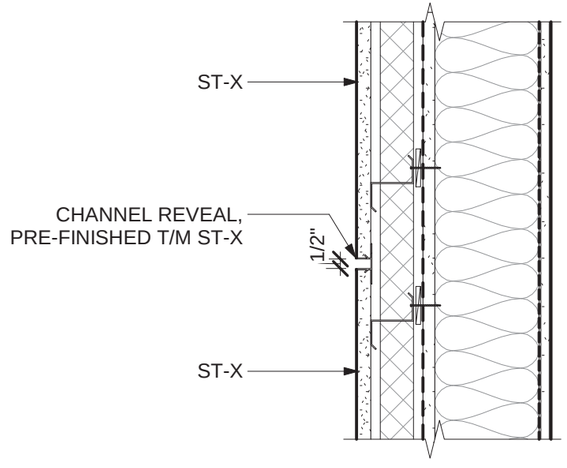

④ HORZ. JOINT ST-X TO ST-X
Scale 1 1/2" = 1'-0"

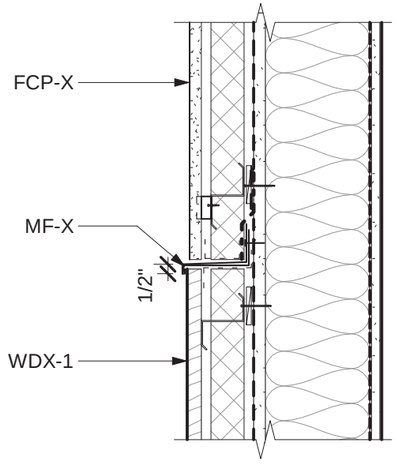

⑤ HORZ. TRANSITION FCP TO WDX
Scale 1 1/2" = 1'-0"

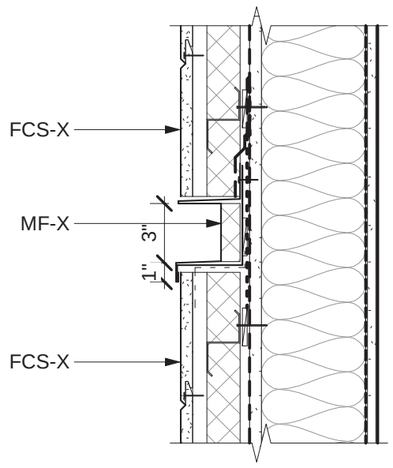

① MF-X HORZ. REVEAL FCS TO FCS
Scale 1 1/2" = 1'-0"

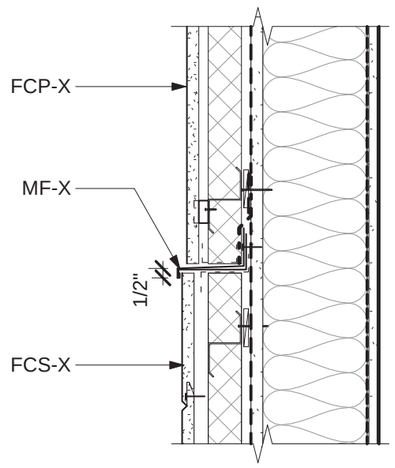

③ HORZ. TRANSITION FCS TO FCP
Scale 1 1/2" = 1'-0"

Approved
City of Portland
Bureau of Development Services
Planner _____
Date 02-07-2024
* This approval applies only to the reviews requested and is subject to all conditions of approval. Additional zoning requirements may apply.

© 2023 HOLST ARCHITECTURE INC.

HOLST

STRONG PROPERTY
4931-4947 N WILLIAMS AVE
PORTLAND, OR 97217

DESIGN REVIEW
01.30.2024

title : DETAILS
LU NO. 23-103655 DZM
sheet : C.22

LU 23-103655 DZ Exhibit C.19

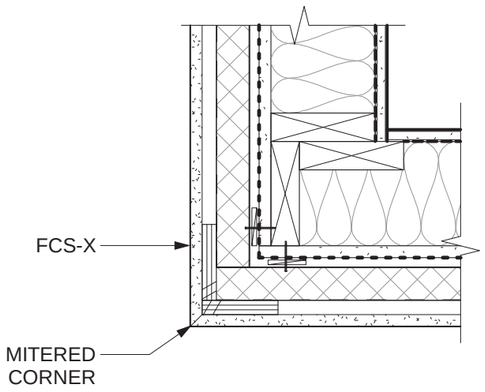

3 OUTSIDE CORNER FCS TO FCS
Scale 1 1/2" = 1'-0"

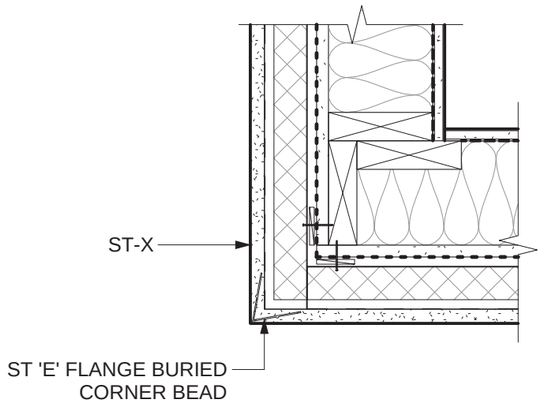

6 OUTSIDE CORNER ST-X TO ST-X
Scale 1 1/2" = 1'-0"

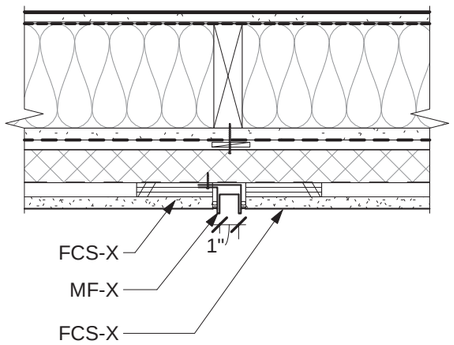

2 MF-X VERT. TRANSITION FCS TO FCS
Scale 1 1/2" = 1'-0"

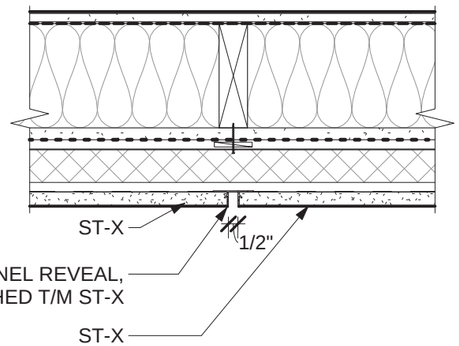

5 VERT. JOINT ST-X TO ST-X
Scale 1 1/2" = 1'-0"

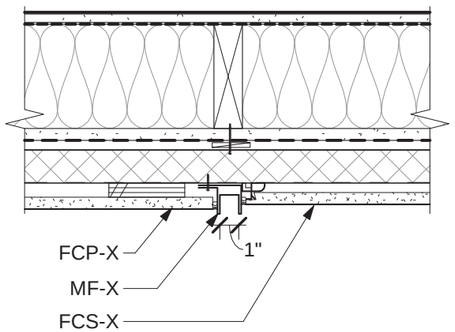

7 MF-X VERT. TRANSITION FCP TO FCS
Scale 1 1/2" = 1'-0"

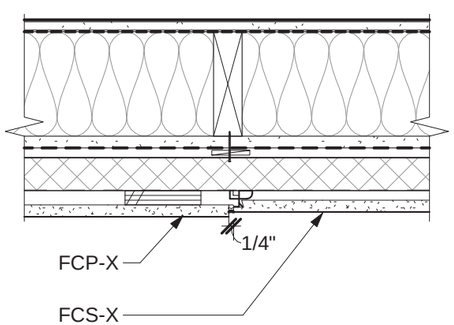

1 VERT. TRANSITION FCP TO FCS
Scale 1 1/2" = 1'-0"

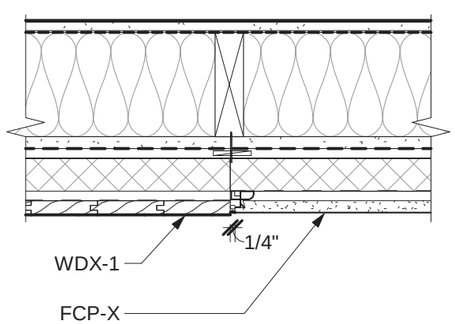

4 VERT. TRANSITION WDX TO FCP
Scale 1 1/2" = 1'-0"

Approved
City of Portland
Bureau of Development Services
Planner
Date 02-07-2024
* This approval applies only to the reviews requested and is subject to all conditions of approval. Additional zoning requirements may apply.

© 2023 HOLST ARCHITECTURE INC.

HOLST

STRONG PROPERTY
4931-4947 N WILLIAMS AVE
PORTLAND, OR 97217

DESIGN REVIEW
01.30.2024

title : DETAILS
LU NO. 23-103655 DZM
sheet : C.23

LU 23-103655 DZ Exhibit C.20

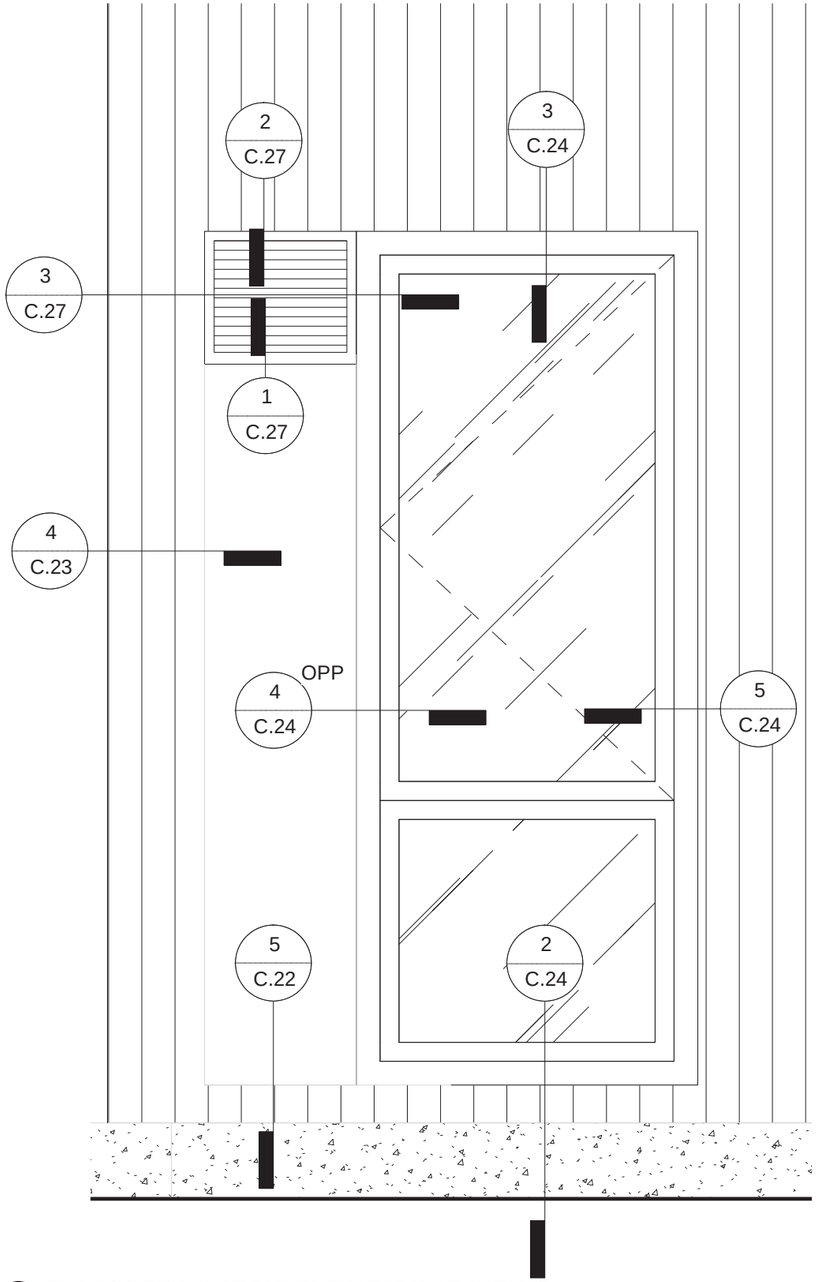

1 ENLARGED WINDOW ELEVATION AT WDX-1
Scale 3/4" = 1'-0"

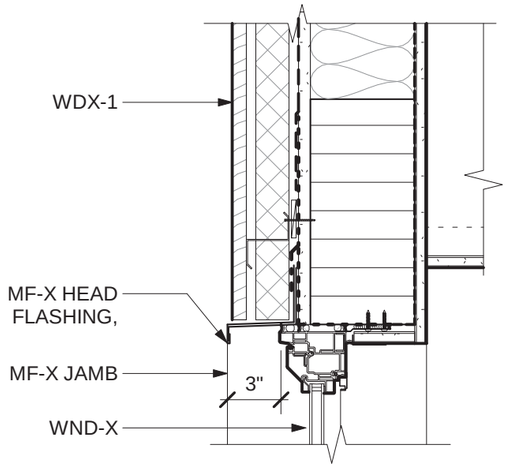

3 WINDOW HEAD AT WDX-1
Scale 1 1/2" = 1'-0"

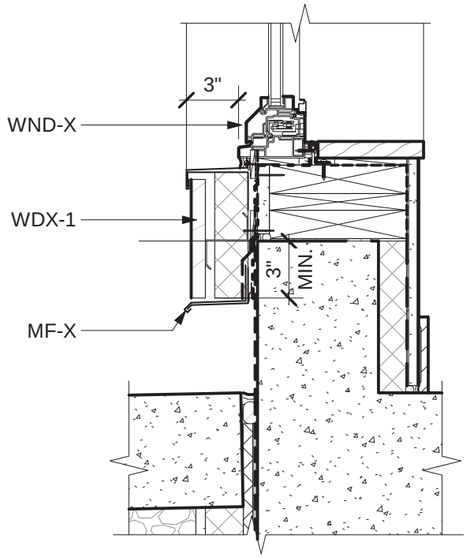

2 WINDOW SILL AT WDX-1
Scale 1 1/2" = 1'-0"

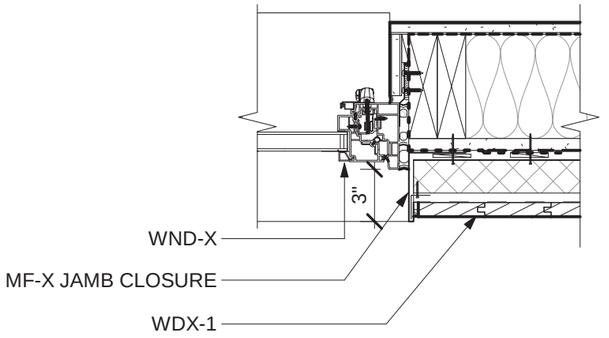

5 WINDOW JAMB AT WDX-1
Scale 1 1/2" = 1'-0"

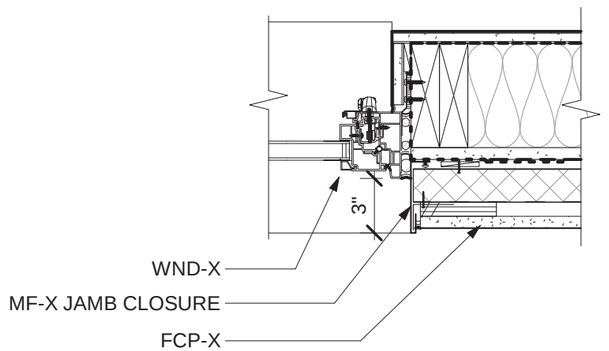

4 WINDOW JAMB AT FCP-X
Scale 1 1/2" = 1'-0"

Approved
City of Portland
Bureau of Development Services
Planner
Date 02-07-2024
* This approval applies only to the reviews requested and is subject to all conditions of approval. Additional zoning requirements may apply.

HOLST
© 2023 HOLST ARCHITECTURE INC.

STRONG PROPERTY
4931-4947 N WILLIAMS AVE
PORTLAND, OR 97217

DESIGN REVIEW
01.30.2024

title : DETAILS
LU NO. 23-103655 DZM
sheet : C.24

LU 23-103655 DZ Exhibit C.21

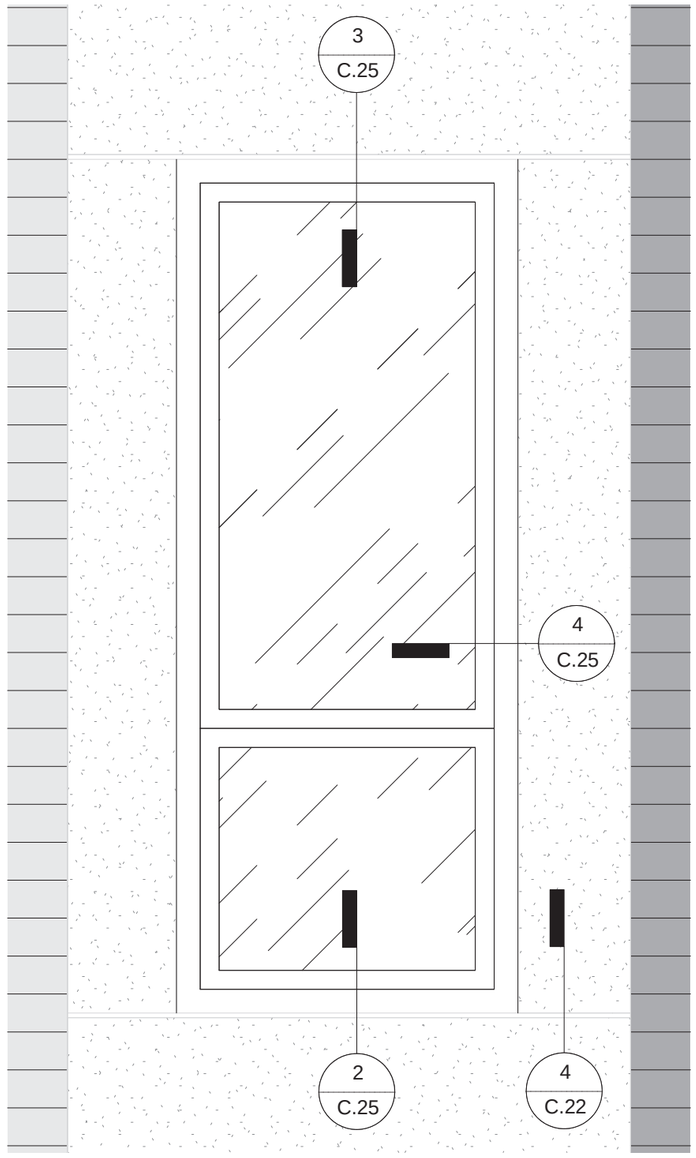

1 ENLARGED WINDOW ELEVATION AT ST-X
Scale 3/4" = 1'-0"

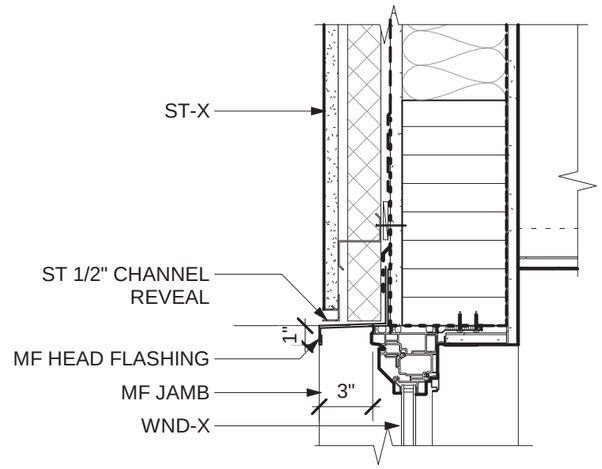

3 WINDOW HEAD AT ST-X
Scale 1 1/2" = 1'-0"

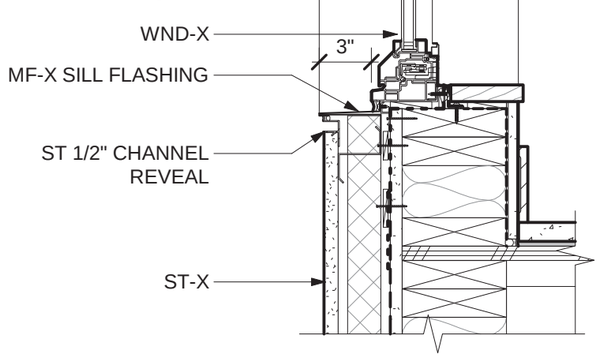

2 WINDOW SILL AT ST-X
Scale 1 1/2" = 1'-0"

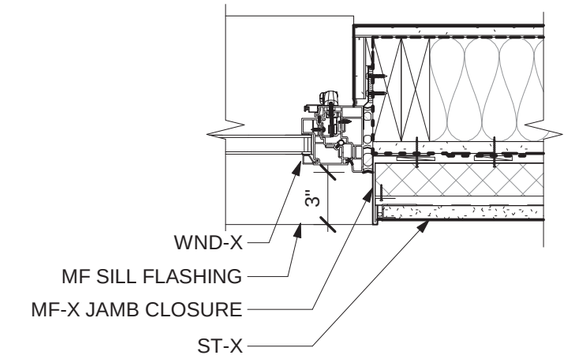

4 WINDOW JAMB AT ST-X
Scale 1 1/2" = 1'-0"

Approved
City of Portland
Bureau of Development Services
Planner _____
Date 02-07-2024
* This approval applies only to the reviews requested and is subject to all conditions of approval. Additional zoning requirements may apply.

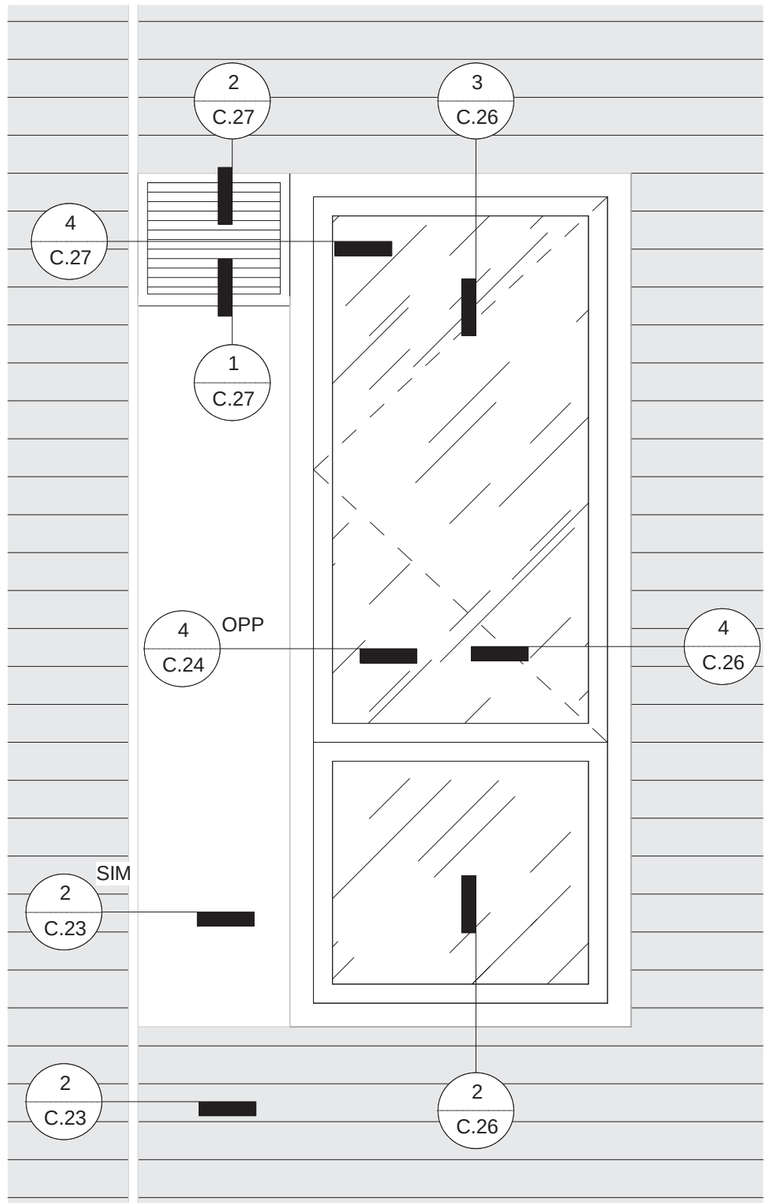

1 ENLARGED WINDOW ELEVATION AT FCS-X
Scale 3/4" = 1'-0"

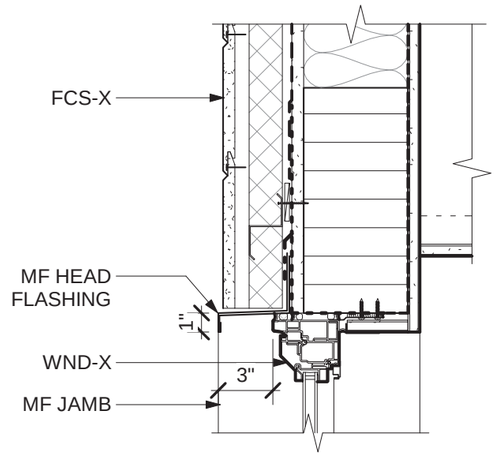

3 WINDOW HEAD AT FCS-X
Scale 1 1/2" = 1'-0"

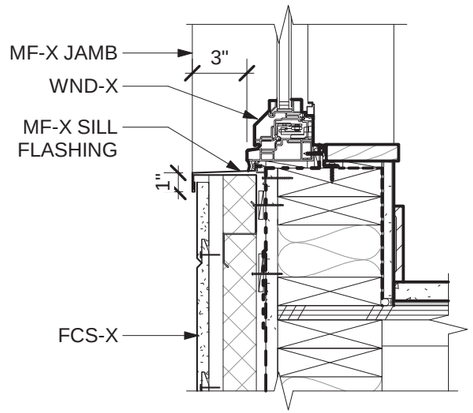

2 WINDOW SILL AT FCS-X
Scale 1 1/2" = 1'-0"

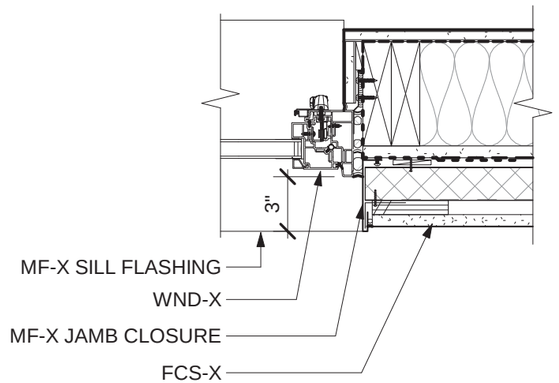

4 WINDOW JAMB AT FCS-X
Scale 1 1/2" = 1'-0"

Approved
City of Portland
Bureau of Development Services
Planner
Date 02-07-2024
* This approval applies only to the reviews requested and is subject to all conditions of approval. Additional zoning requirements may apply.

© 2023 HOLST ARCHITECTURE INC.

HOLST

STRONG PROPERTY
4931-4947 N WILLIAMS AVE
PORTLAND, OR 97217

DESIGN REVIEW
01.30.2024

title : DETAILS
LU NO. 23-103655 DZM
sheet : C.26

LU 23-103655 DZ Exhibit C.23

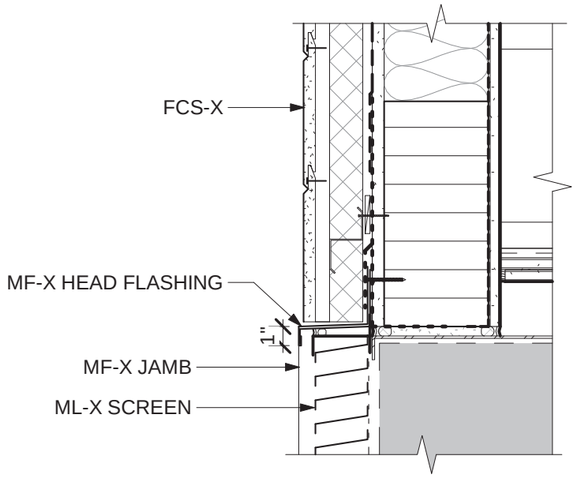

② LOUVER HEAD AT FCS-X
Scale 1 1/2" = 1'-0"

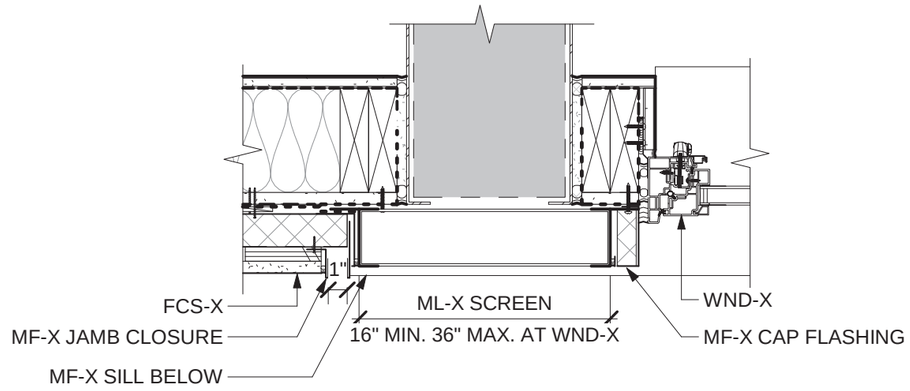

④ LOUVER TO WINDOW JAMB AT REVEAL AT FCS-X
Scale 1 1/2" = 1'-0"

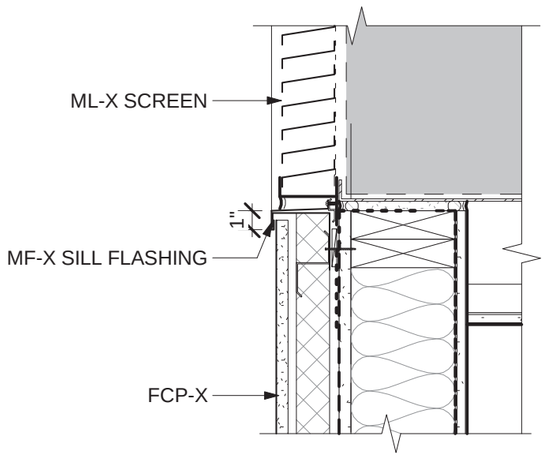

① LOUVER SILL AT FCP-X
Scale 1 1/2" = 1'-0"

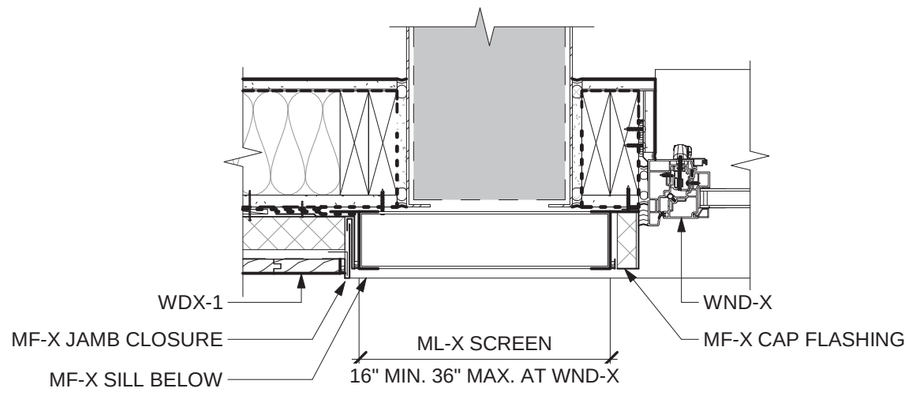

③ LOUVER TO WINDOW JAMB AT WDX
Scale 1 1/2" = 1'-0"

Approved
City of Portland
Bureau of Development Services
Planner _____
Date 02-07-2024
* This approval applies only to the reviews requested and is subject to all conditions of approval. Additional zoning requirements may apply.

© 2023 HOLST ARCHITECTURE INC.

HOLST

STRONG PROPERTY
4931-4947 N WILLIAMS AVE
PORTLAND, OR 97217

DESIGN REVIEW
01.30.2024

title : DETAILS
LU NO. 23-103655 DZM
sheet : C.27

LU 23-103655 DZ Exhibit C.24

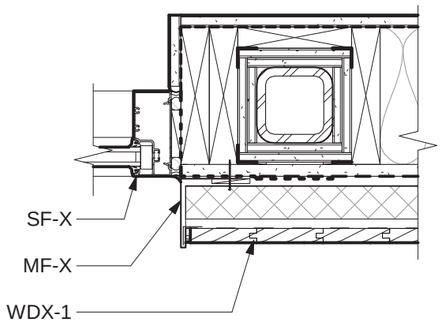

3 SF-X JAMB AT WDX
Scale 1 1/2" = 1'-0"

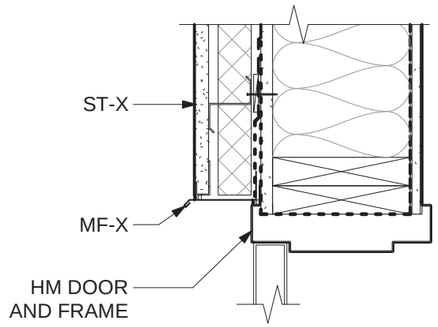

6 HM HEADER AT ST-X
Scale 1 1/2" = 1'-0"

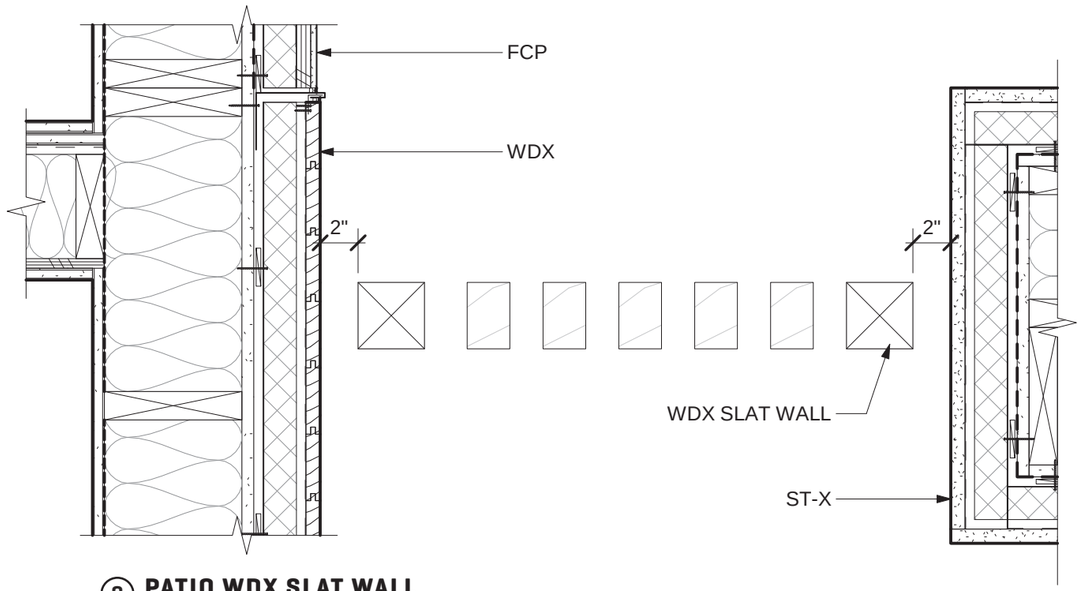

8 PATIO WDX SLAT WALL
Scale 1 1/2" = 1'-0"

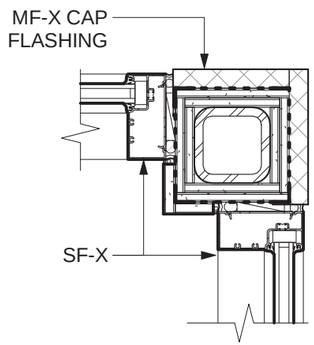

2 SF-X TO SF-X AT CORNER COLUMN
Scale 1 1/2" = 1'-0"

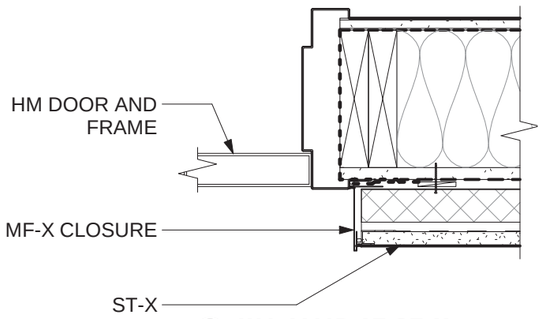

5 HM JAMB AT ST-X
Scale 1 1/2" = 1'-0"

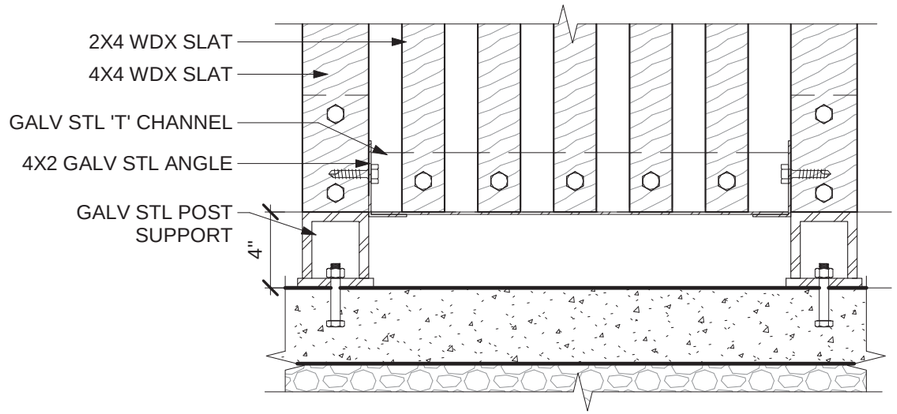

7 PATIO WDX SLAT WALL
Scale 1 1/2" = 1'-0"

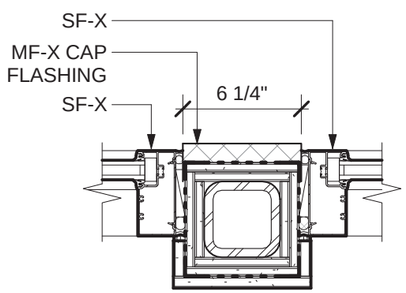

1 SF-X TO SF-X AT COLUMN
Scale 1 1/2" = 1'-0"

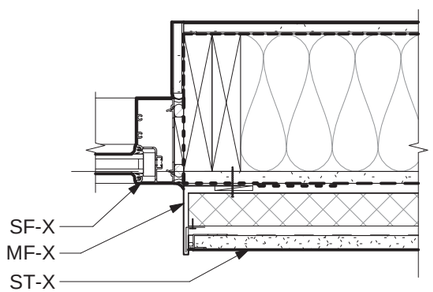

4 SF-X JAMB AT ST-X
Scale 1 1/2" = 1'-0"

Approved
City of Portland
Bureau of Development Services

Planner _____

Date 02-07-2024

*This approval applies only to the reviews requested and is subject to all conditions of approval. Additional zoning requirements may apply.

HOLST

© 2023 HOLST ARCHITECTURE INC.

STRONG PROPERTY
4931-4947 N WILLIAMS AVE
PORTLAND, OR 97217

DESIGN REVIEW
01.30.2024

title : DETAILS

LU NO. 23-103655 DZM

sheet : C.28

LU 23-103655 DZ Exhibit C.25

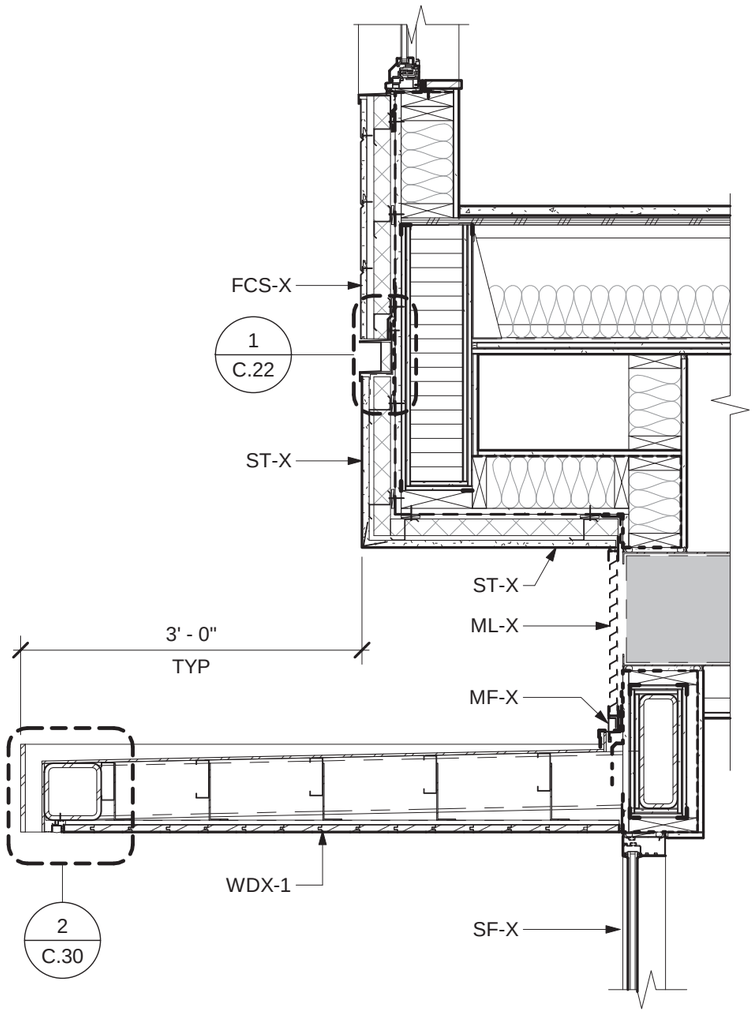

① **CANOPY AT LOUVER**
Scale 3/4" = 1'-0"

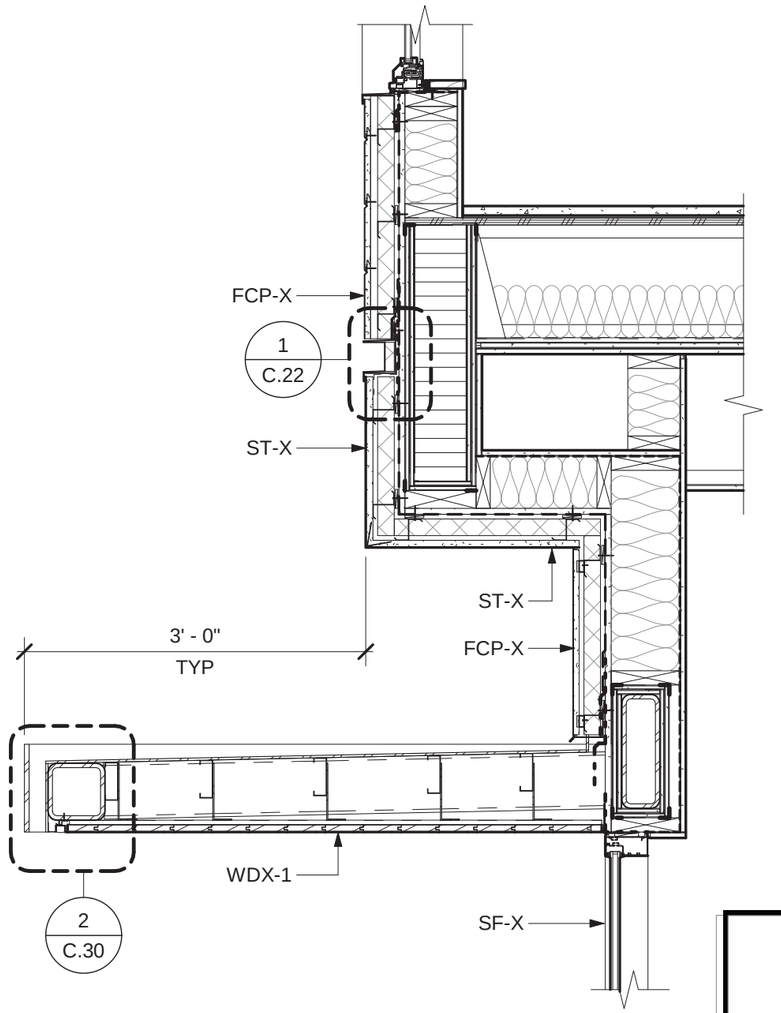

② **CANOPY AT FCP-X**
Scale 3/4" = 1'-0"

Approved
City of Portland
Bureau of Development Services
Planner _____
Date 02-07-2024
*This approval applies only to the reviews requested and is subject to all conditions of approval. Additional zoning requirements may apply.

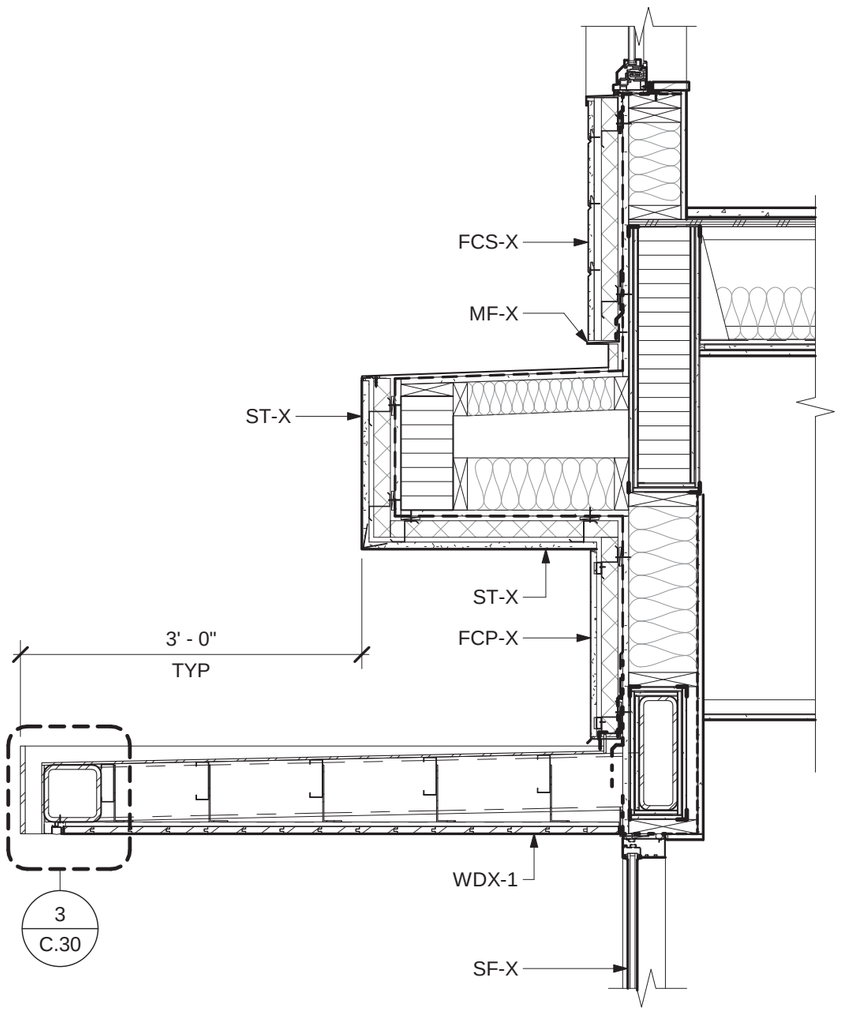

1 CANOPY AT RECESSED LEVEL 2-4
Scale 1 1/2" = 1'-0"

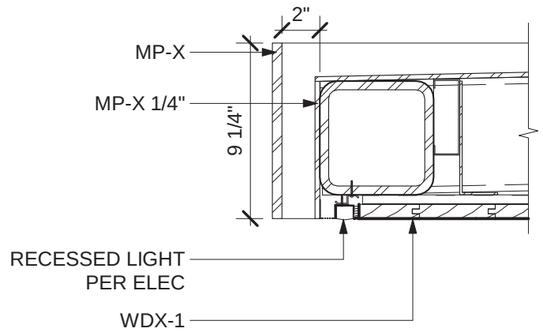

2 TYP. CANOPY EDGE
Scale 1 1/2" = 1'-0"

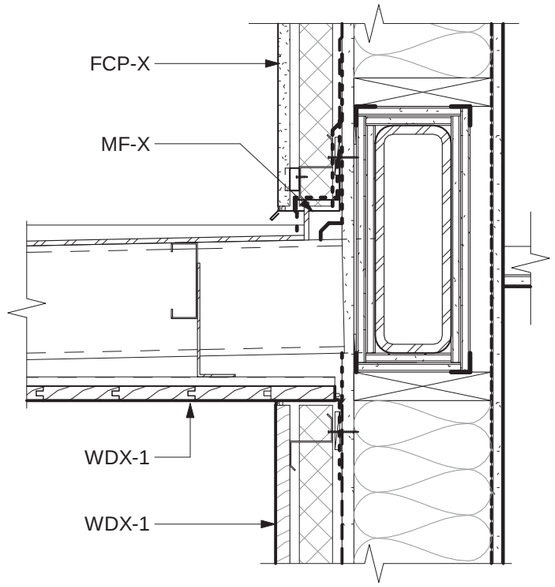

3 CANOPY AT WDX-1
Scale 1 1/2" = 1'-0"

Approved
City of Portland
Bureau of Development Services
Planner
Date 02-07-2024
* This approval applies only to the reviews requested and is subject to all conditions of approval. Additional zoning requirements may apply.

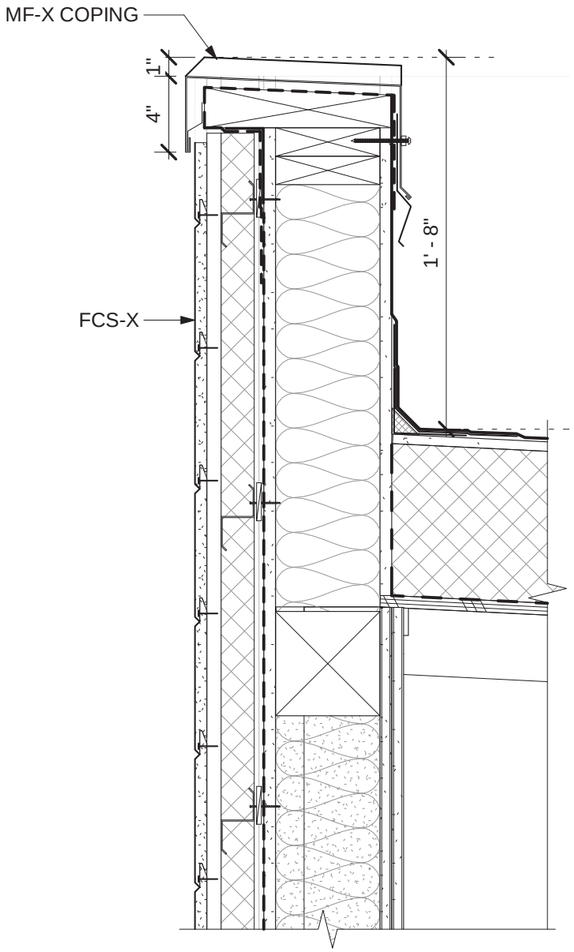

① **PARAPET AT FCS-X**
Scale 1 1/2" = 1'-0"

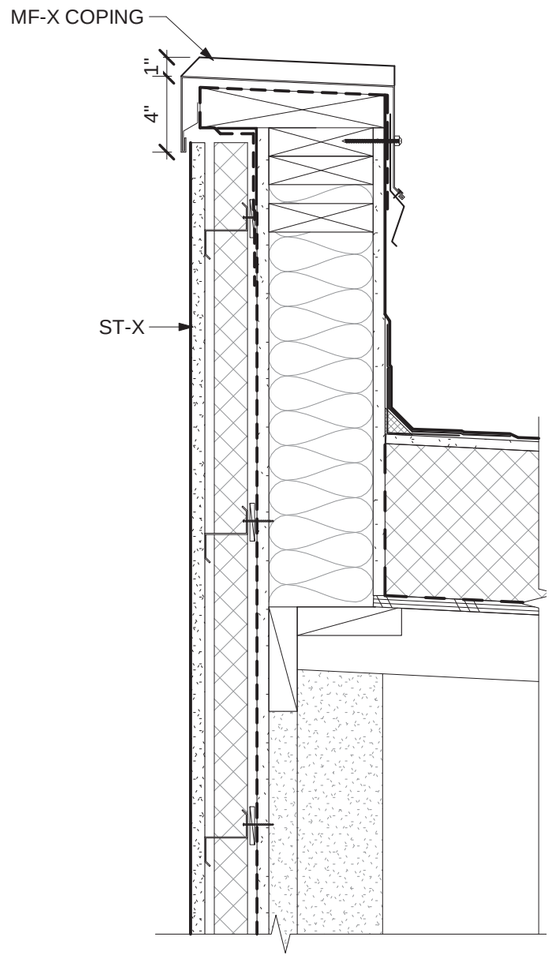

② **PARAPET AT ST-X**
Scale 1 1/2" = 1'-0"

Approved
City of Portland
Bureau of Development Services
Planner
Date 02-07-2024
*This approval applies only to the reviews requested and is subject to all conditions of approval. Additional zoning requirements may apply.

OPTION 01 - DRYWELLS

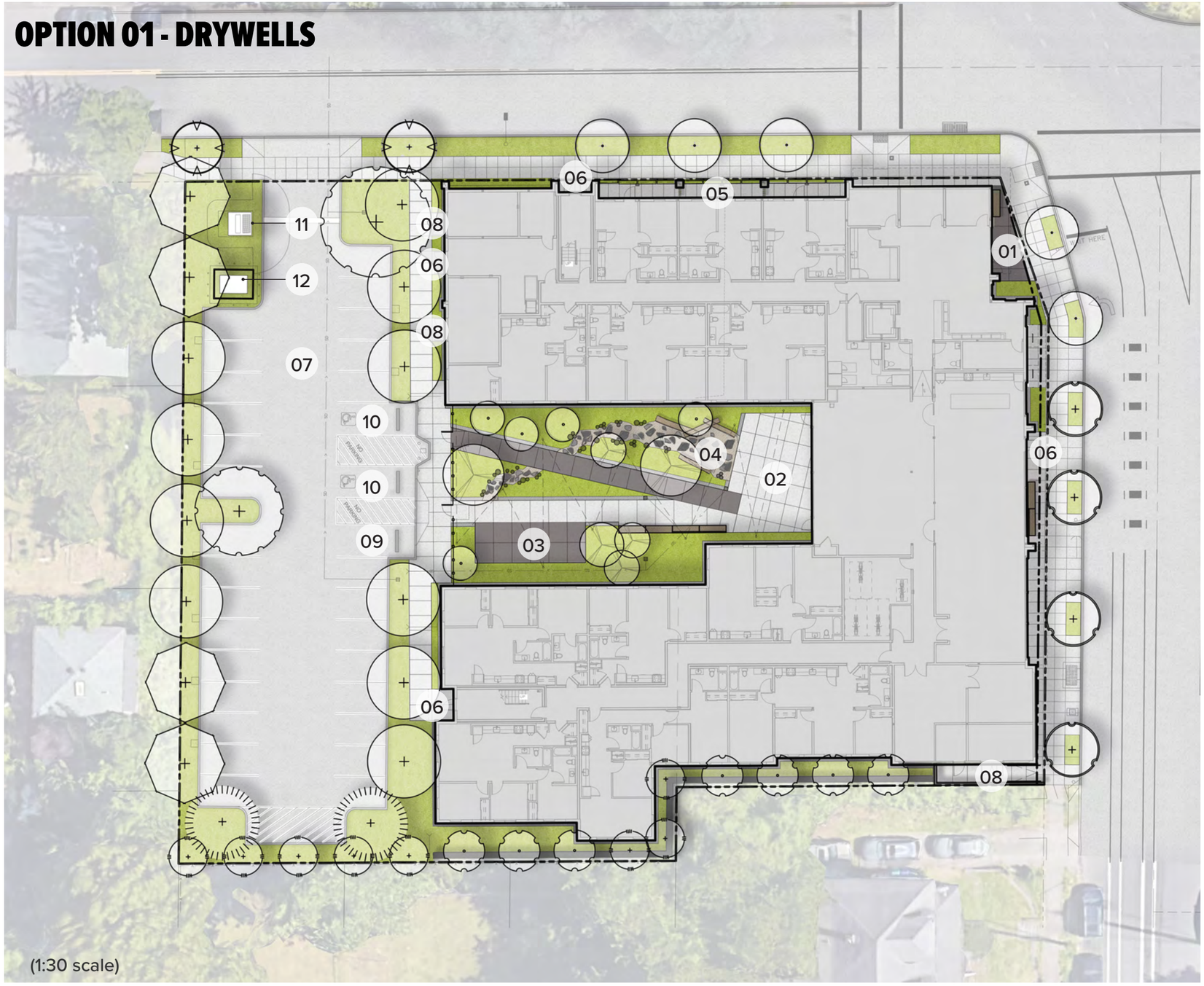

(1:30 scale)

LEGEND

01	Main Entry Plaza
02	Couryard Terrace (furnishings by owner)
03	Gathering Terrace (furnishings by owner)
04	Nature Play Area
05	Private Patios
06	Building Entry
07	Parking Area
08	Utility Entry
09	Loading Space
10	Accessible Parking
11	Transformer
12	Battery Energy Storage System

Approved
City of Portland
Bureau of Development Services
Planner
Date 02-07-2024
*This approval applies only to the reviews requested and is subject to all conditions of approval. Additional zoning requirements may apply.

© 2023 HOLST ARCHITECTURE INC.

OPTION 02 - FLOW THROUGH PLANTERS

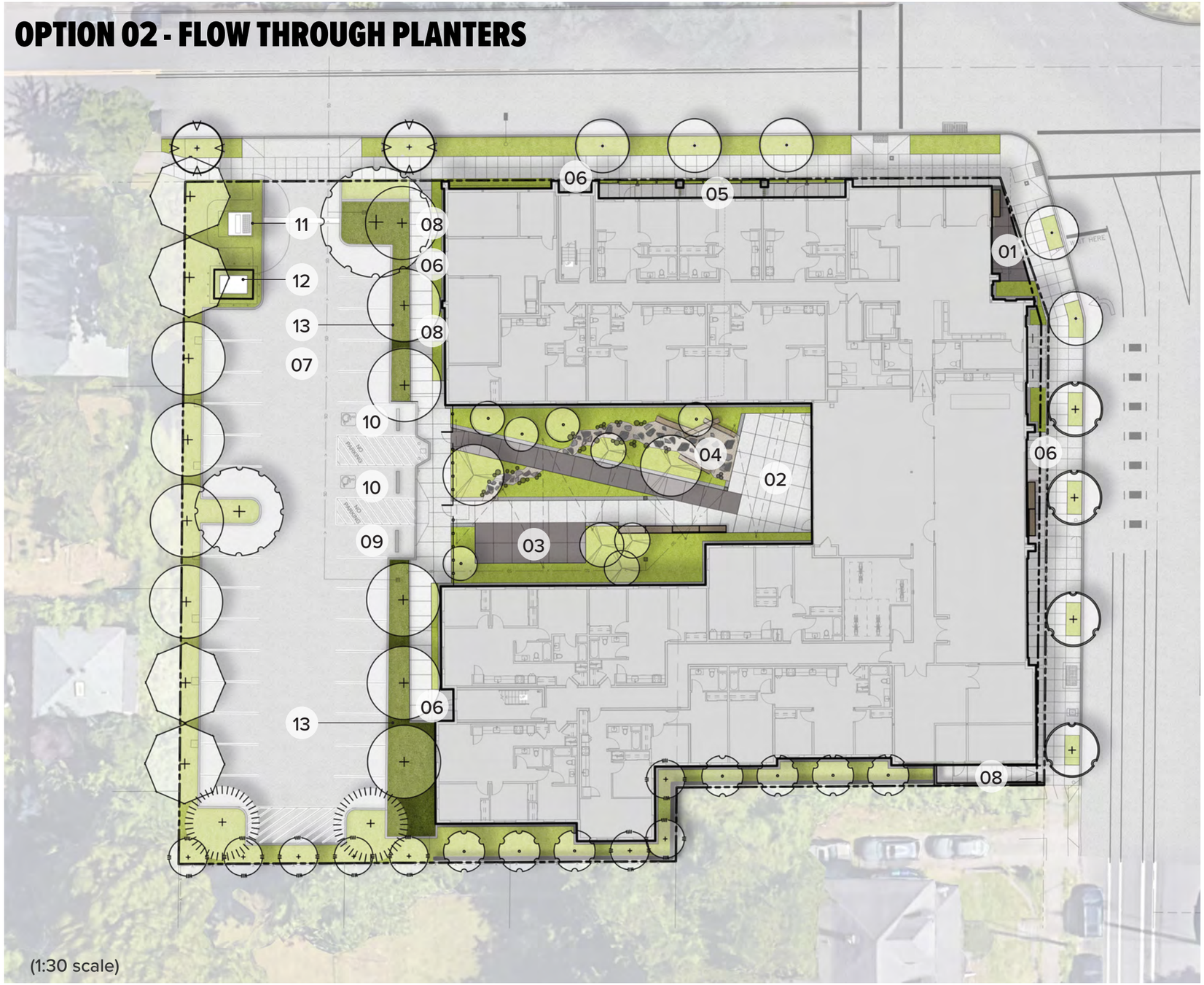

LEGEND

01	Main Entry Plaza
02	Couryard Terrace (furnishings by owner)
03	Gathering Terrace (furnishings by owner)
04	Nature Play Area
05	Private Patios
06	Building Entry
07	Parking Area
08	Utility Entry
09	Loading Space
10	Accessible Parking
11	Transformer
12	Battery Energy Storage System
13	Flow Through Stormwater Planter

Approved
City of Portland
Bureau of Development Services
Planner
Date 02-07-2024
* This approval applies only to the reviews requested and is subject to all conditions of approval. Additional zoning requirements may apply.

© 2023 HOLST ARCHITECTURE INC.

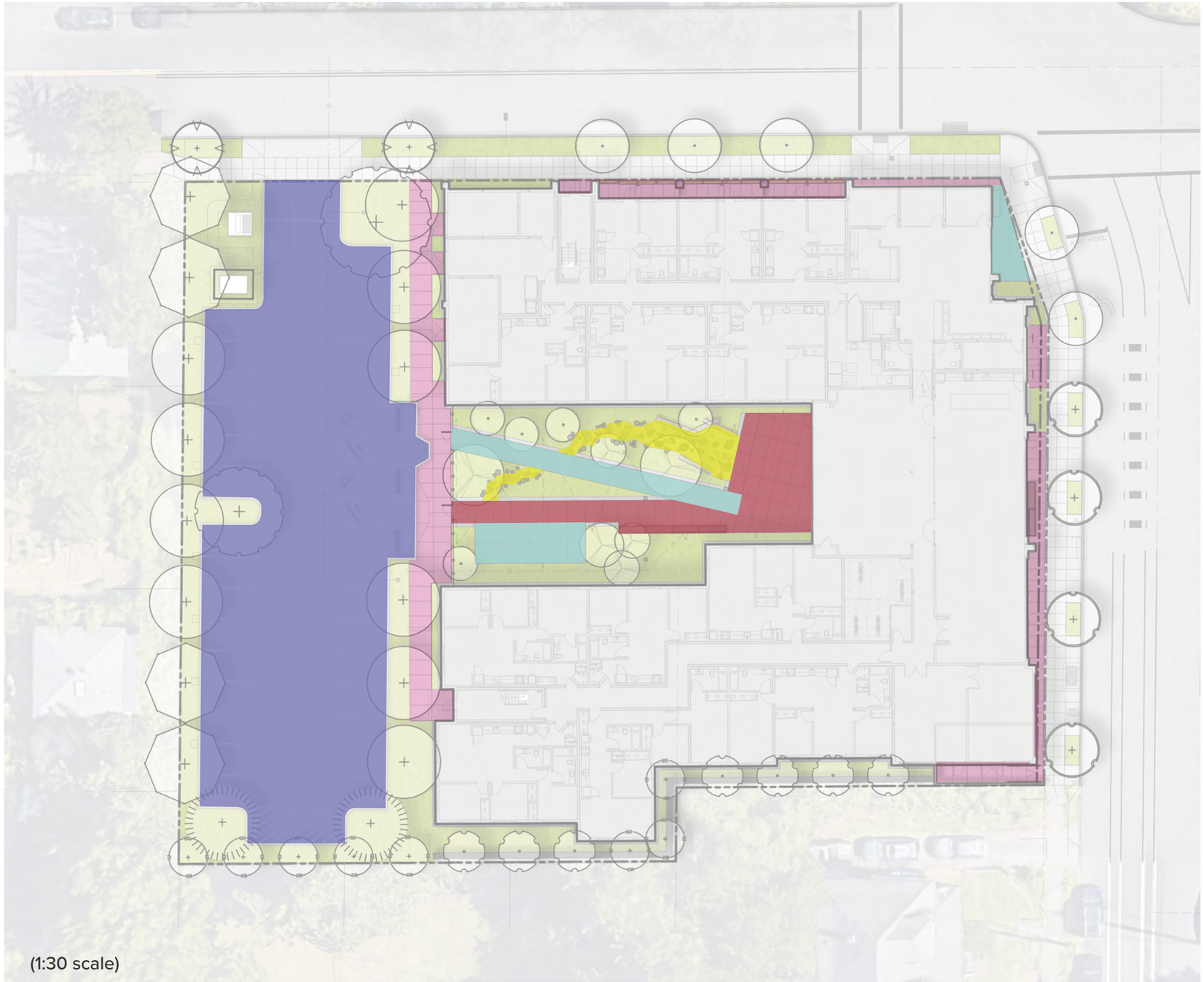

(1:30 scale)

MATERIAL 1

Concrete Paving Type I
Standard color, broom finish

MATERIAL 2

Concrete Paving Type 2
Sand etch finish

MATERIAL 3

Concrete Paving Type 3
Integral color, Sand etch

MATERIAL 4

Stabilized Crushed Stone
1/4 - basalt W/ steppers

MATERIAL 5

Asphalt
Standard

Approved
City of Portland
Bureau of Development Services

Planner _____

Date 02-07-2024

* This approval applies only to the reviews requested and is subject to all conditions of approval. Additional zoning requirements may apply.

© 2023 HOLST ARCHITECTURE INC.

HOLST

STRONG PROPERTY
4931-4947 N WILLIAMS AVE
PORTLAND, OR 97217

GROUNDWORKSHOP

DESIGN REVIEW
01.30.2024

title : LANDSCAPE PLAN

LU NO. 23-103655 DZM

sheet : C.34

LU 23-103655 DZ Exhibit C.31

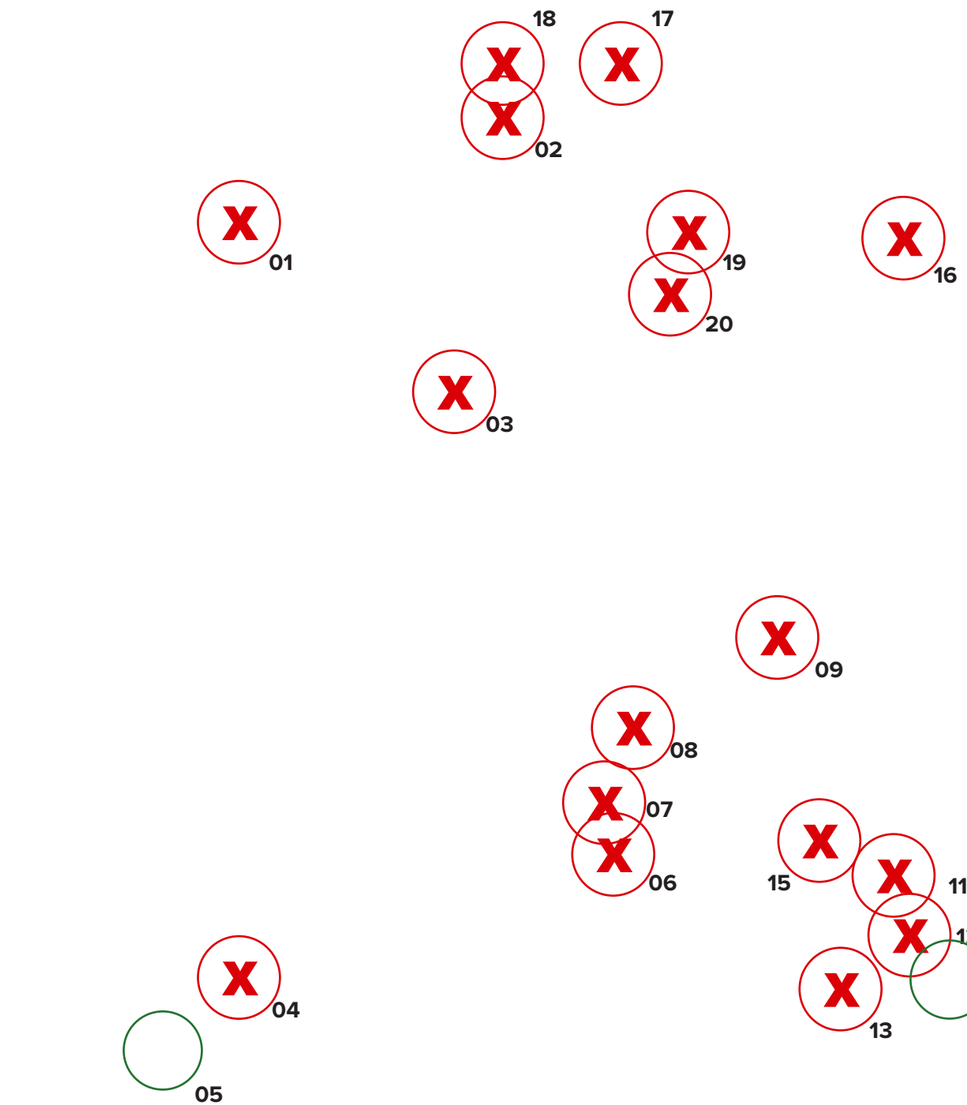

(1:30 scale)

Existing Tree Symbols

EXISTING TREE PROPOSED FOR REMOVAL

01 ← TREE IDENTIFICATION NUMBER

EXISTING TREE TO REMAIN

01

EXISTING TREE TABLE

#	TREE TYPE / SPECIES	DBH	CONDITION	NOTES
01	DECIDUOUS / ENGLISH WALNUT	17	GOOD	REMOVE
02	DECIDUOUS / BIG LEAF MAPLE	19	GOOD/FAIR	REMOVE (ROW)
03	DECIDUOUS / SWEET CHERRY	26	GOOD/FAIR	REMOVE (NS)
04	DECIDUOUS / ENGLISH HAWTHORN	14	DYING	REMOVE (NS)
05	DECIDUOUS / TREE OF HEAVEN	12	GOOD	REMAIN (NS)(OS)
06	DECIDUOUS / SWEET CHERRY	28	GOOD/FAIR	REMOVE (NS)
07	DECIDUOUS / WESTERN RED CEDAR	28	FAIR	REMOVE
08	EVERGREEN / ENGLISH HOLLY	16	FAIR	REMOVE (NS)
09	EVERGREEN / ENGLIS HOLLY	10	GOOD/FAIR	REMOVE (NS)
10	EVERGREEN / WESTERN RED CEDAR	25	GOOD	REMOVE
11	EVERGREEN / ENGLISH HOLLY	23	GOOD/FAIR	REMOVE (NS)
12	EVERGREEN / ENGLISH HOLLY	10	FAIR	REMOVE (NS)
13	DECIDUOUS / SWEET CHERRY	17	GOOD/FAIR	REMOVE (NS)
14	DECIDUOUS / SWEET CHERRY	30	GOOD/FAIR	REMAIN (NS)(OS)
15	DECIDUOUS / SWEET CHERRY	28	GOOD/FAIR	REMOVE (NS)
16	DECIDUOUS / SWEET CHERRY	11	GOOD/FAIR	REMOVE (NS)
17	DECIDUOUS / CHERRY SPP.	8	DEAD	REMOVE (ROW)
18	DECIDUOUS / BRICH SPP.	15	DEAD	REMOVE (ROW)
19	DECIDUOUS / NORWAY MAPLE	19	GOOD	REMOVE (NS)
20	DECIDUOUS / PACIFIC DOGWOOD	11	GOOD	REMOVE

NOTES COLUMN KEY:
REMOVE = PROPOSED FOR REMOVAL
REMAIN = PROPOSED TO REMAIN
(NS) = NUISANCE SPECIES
(OS) = OFF SITE
(ROW) = LOCATED IN RIGHT OF WAY OR DEDICATION

Street tree removal by separate permit.
Trees noted to remain to be protected per City of Portland code 11.60.030.C.2

Approved
City of Portland
Bureau of Development Services

Planner _____

Date 02-07-2024

*This approval applies only to the reviews requested and is subject to all conditions of approval. Additional zoning requirements may apply.

HOLST
© 2023 HOLST ARCHITECTURE INC.

STRONG PROPERTY
4931-4947 N WILLIAMS AVE
PORTLAND, OR 97217

GROUNDWORKSHOP

DESIGN REVIEW
01.30.2024

title : TREE PLAN
LU NO. 23-103655 DZM
sheet : C.35

LU 23-103655 DZ Exhibit C.32

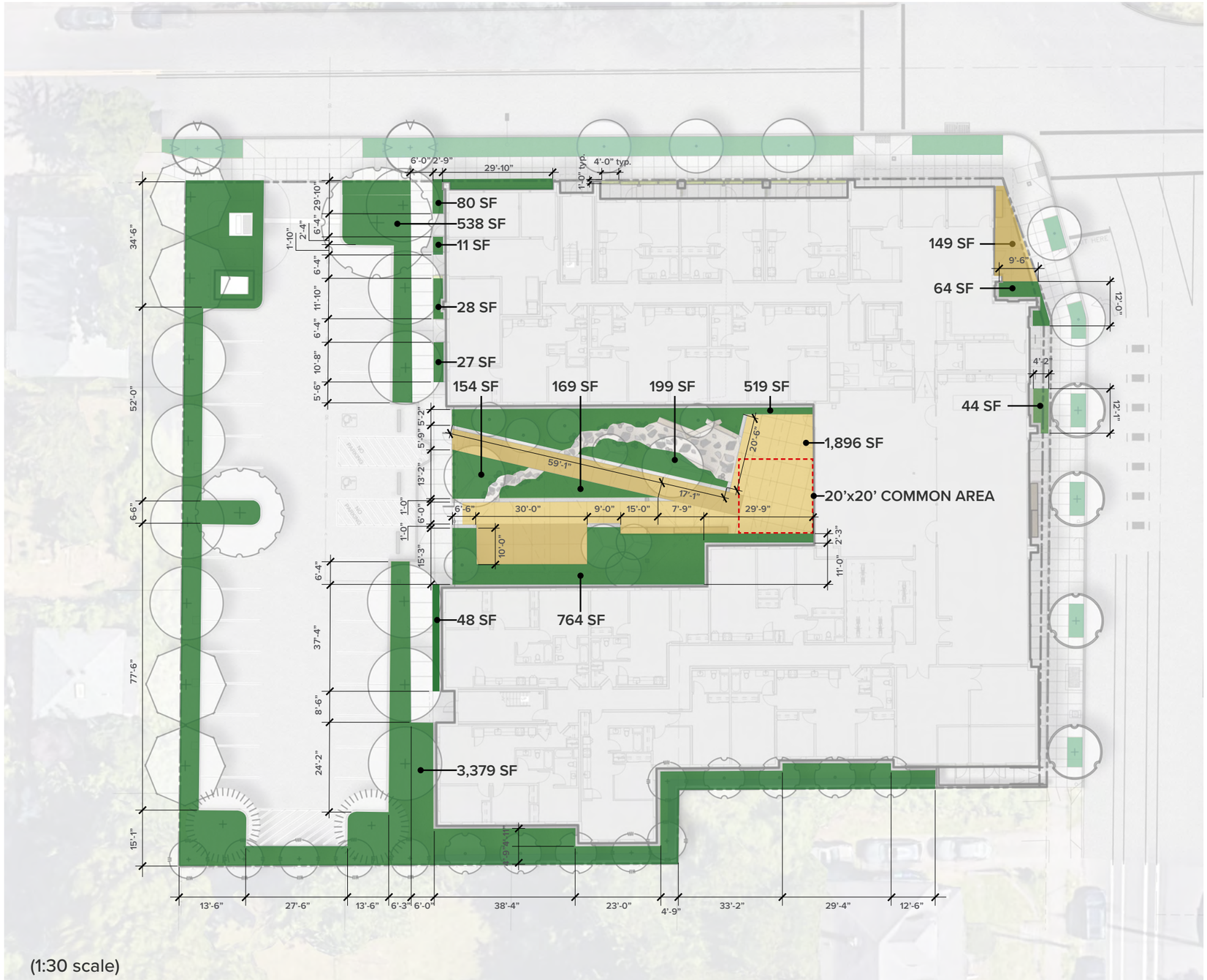

(1:30 scale)

Landscape Area Typologies

- RIGHT OF WAY PLANTING
- ON-SITE PLANTING
- IMPROVED PEDESTRIAN AREA

Planting Area Takeoffs

PROPOSED LANDSCAPE AREA TAKEOFFS			
SYM.	AREA TYPE	AREA	PERCENTAGE
L1	L-1 STANDARD PLANTING	6,024 SF	14.72%
PED	PEDESTRIAN USE AREA	2,045 SF	4.99%

TOTAL SITE AREA: 40,910 SF - INCLUDES DEDICATION
TOTAL REQUIRED LANDSCAPE AREA (15% OF TOTAL SITE) = 6,137 SF
TOTAL LANDSCAPE AREA PROPOSED (L1 OR GREATER) - 8,069 SF
EXCEEDS REQUIRED AREA

Right of way planting areas and raised planters not included in calculations
All dimensions rounded to nearest inch

Approved
City of Portland
Bureau of Development Services

Planner _____

Date 02-07-2024

* This approval applies only to the reviews requested and is subject to all conditions of approval. Additional zoning requirements may apply.

© 2023 HOLST ARCHITECTURE INC.

OPTION 01 - DRYWELLS

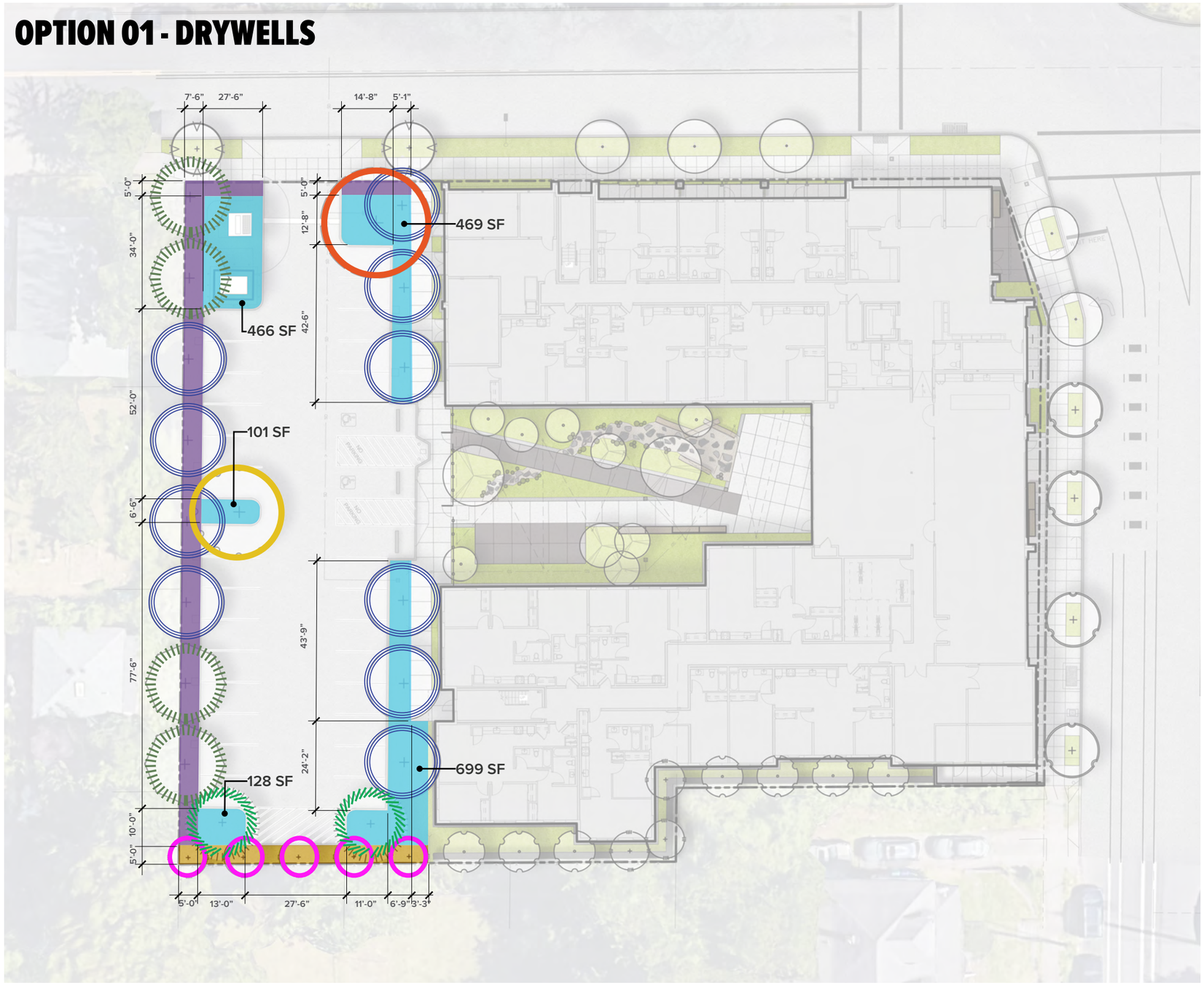

Landscape Area Typologies

- L2 SCREENING
- L3 SCREENING
- P1 LANDSCAPING

Planting Area Takeoffs

PROPOSED PARKING LANDSCAPE TAKEOFFS		
SYM.	AREA TYPE	AREA
P1	P1 STANDARD PLANTING	1,863 SF
TOTAL PARKING STALLS: 31 (13 WITH 2' OVERHANG ZONE) **TOTAL REQUIRED P1 LANDSCAPE AREA (45SF/SPACE) = 1,395 SF** **TOTAL P1 LANDSCAPE AREA PROPOSED (L1 OR GREATER) - 1,863 SF** **EXCEEDS REQUIRED AREA**		

A minimum of 1.5 shrubs per parking 16' stall (18) and 1 shrub per 14' parking stall (13), for a total minimum of (40) shrubs will be planted within the P1 Landscaping zone.
See final planting plan at time of building permit.
Shrub plantings to be a minimum of 1 gal. size at time of planting.
All dimensions rounded to nearest inch.

PROPOSED PARKING TREE COUNT			
SIZE	QTY	SPECIES	SPACE COUNT
LARGE	1	TULIP POPLAR	4
LARGE	2	DOUGLAS FIR	8
LARGE	1	LONDON PLANE TREE	1
MED	4	INCENSE CEDAR	12
MED	10	TUPELO	30
SMALL	5	STAR MAGNOLIA	10
TOTAL PARKING STALLS: 31 **COUNT PROVIDED (5 SMALL+14 MEDIUM+4 LARGE)= 68** **EXCEEDS TREE REQUIREMENT**			

Approved
City of Portland
Bureau of Development Services
Planner
Date 02-07-2024
* This approval applies only to the reviews requested and is subject to all conditions of approval. Additional zoning requirements may apply.

© 2023 HOLST ARCHITECTURE INC.

OPTION 02 - FLOW THROUGH PLANTERS

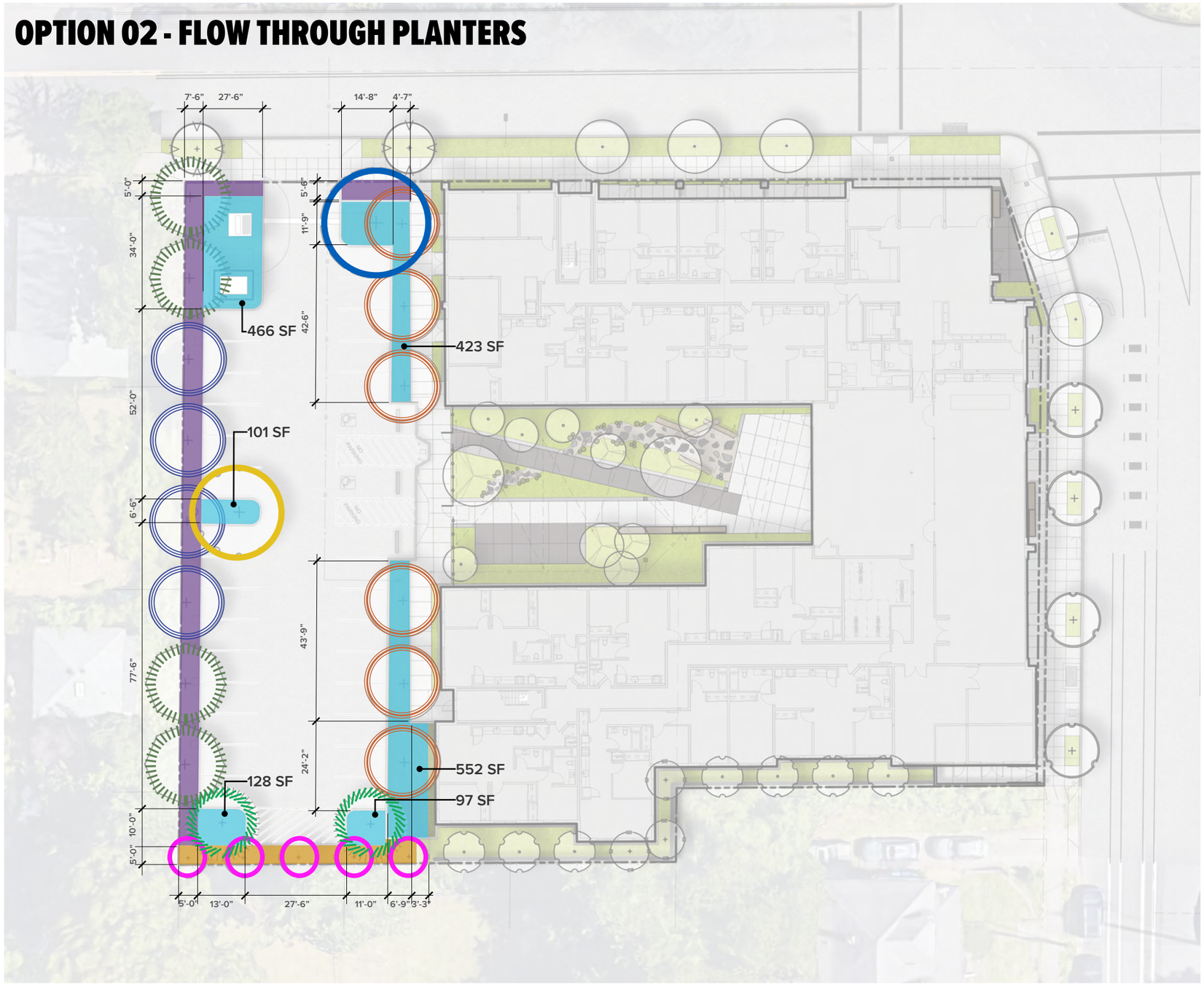

Landscape Area Typologies

L2 SCREENING

L3 SCREENING

P1 LANDSCAPING

Planting Area Takeoffs

PROPOSED PARKING LANDSCAPE TAKEOFFS		
SYM.	AREA TYPE	AREA
P1	P1 STANDARD PLANTING	1,763 SF
TOTAL PARKING STALLS: 31 (13 WITH 2' OVERHANG ZONE) **TOTAL REQUIRED P1 LANDSCAPE AREA (45SF/SPACE) = 1,395 SF** **TOTAL P1 LANDSCAPE AREA PROPOSED (L1 OR GREATER) - 1,763 SF** **EXCEEDS REQUIRED AREA**		

A minimum of 1.5 shrubs per parking 16' stall (18) and 1 shrub per 14' parking stall (13), for a total minimum of (40) shrubs will be planted within the P1 Landscaping zone.
See final planting plan at time of building permit.
Shrub plantings to be a minimum of 1 gal. size at time of planting.
All dimensions rounded to nearest inch.

PROPOSED PARKING TREE COUNT			
SIZE	QTY	SPECIES	SPACE COUNT
LARGE	2	DOUGLAS FIR	8
LARGE	1	WILLOW OAK	4
LARGE	1	LONDON PLANE TREE	4
MED	4	INCENSE CEDAR	12
MED	4	TUPELO	12
MED	6	RED ALDER	18
SMALL	5	STAR MAGNOLIA	10
TOTAL PARKING STALLS: 31 **COUNT PROVIDED (5 SMALL + 14 MEDIUM +4 LARGE)= 68** **EXCEEDS TREE REQUIREMENT**			

Approved
City of Portland
Bureau of Development Services
Planner _____
Date 02-07-2024
*This approval applies only to the reviews requested and is subject to all conditions of approval. Additional zoning requirements may apply.

© 2023 HOLST ARCHITECTURE INC.

OPTION 01 - DRYWELLS

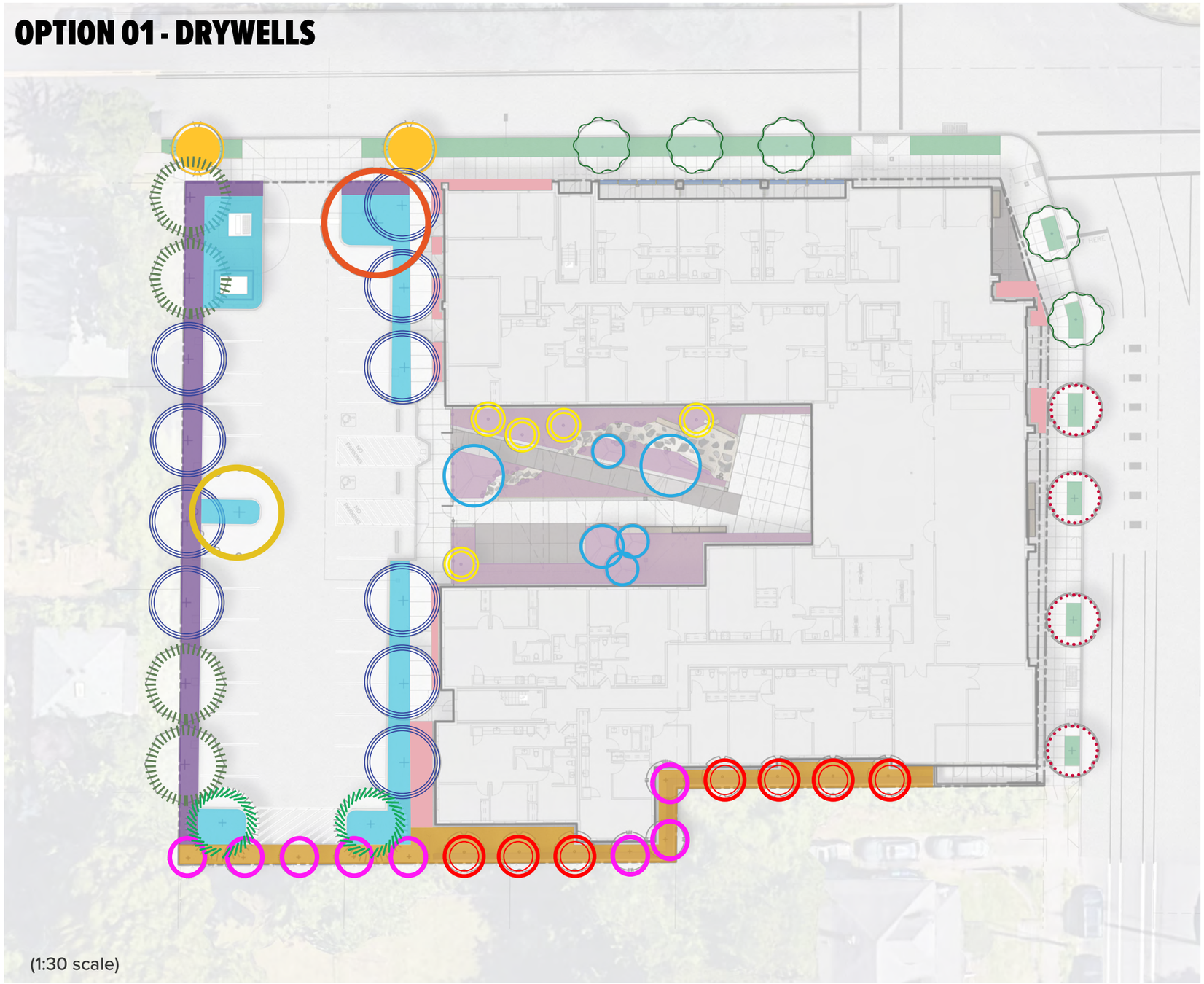

Planting Typologies

- L2 SCREENING
- L3 SCREENING
- RIGHT OF WAY PLANTING
- P1 LANDSCAPING
- PLANTING TYPE 1
- PLANTING TYPE 2
- PLANTING TYPE 3

Street Trees

- Cladrastis kentuckea (American Yellowwood)
- Styphnolobium japonicum (Japanese pagoda tree)
- Parrotia persica (Persian Ironwood)

On-Site Trees

- Liriodendron tulipifera (Tulip Poplar)
- Platanus x Acerifolia (London Plane Tree)
- Pseudotsuga menziesii (Douglas Fir)
- Calocedrus decurrens (Incense Cedar)
- Nyssa sylvatica (Black Tupelo)
- Populus tremuloides (Quaking Aspen)
- Amelanchier x grandiflora (Autumn Brilliance Serviceberry)
- Acer rubrum 'bowhall' (Bowhall Red Maple)
- Magnolia stellata (Star Magnolia)

Approved
City of Portland
Bureau of Development Services

Planner _____

Date 02-07-2024

* This approval applies only to the reviews requested and is subject to all conditions of approval. Additional zoning requirements may apply.

© 2023 HOLST ARCHITECTURE INC.

OPTION 02 - FLOW THROUGH PLANTERS

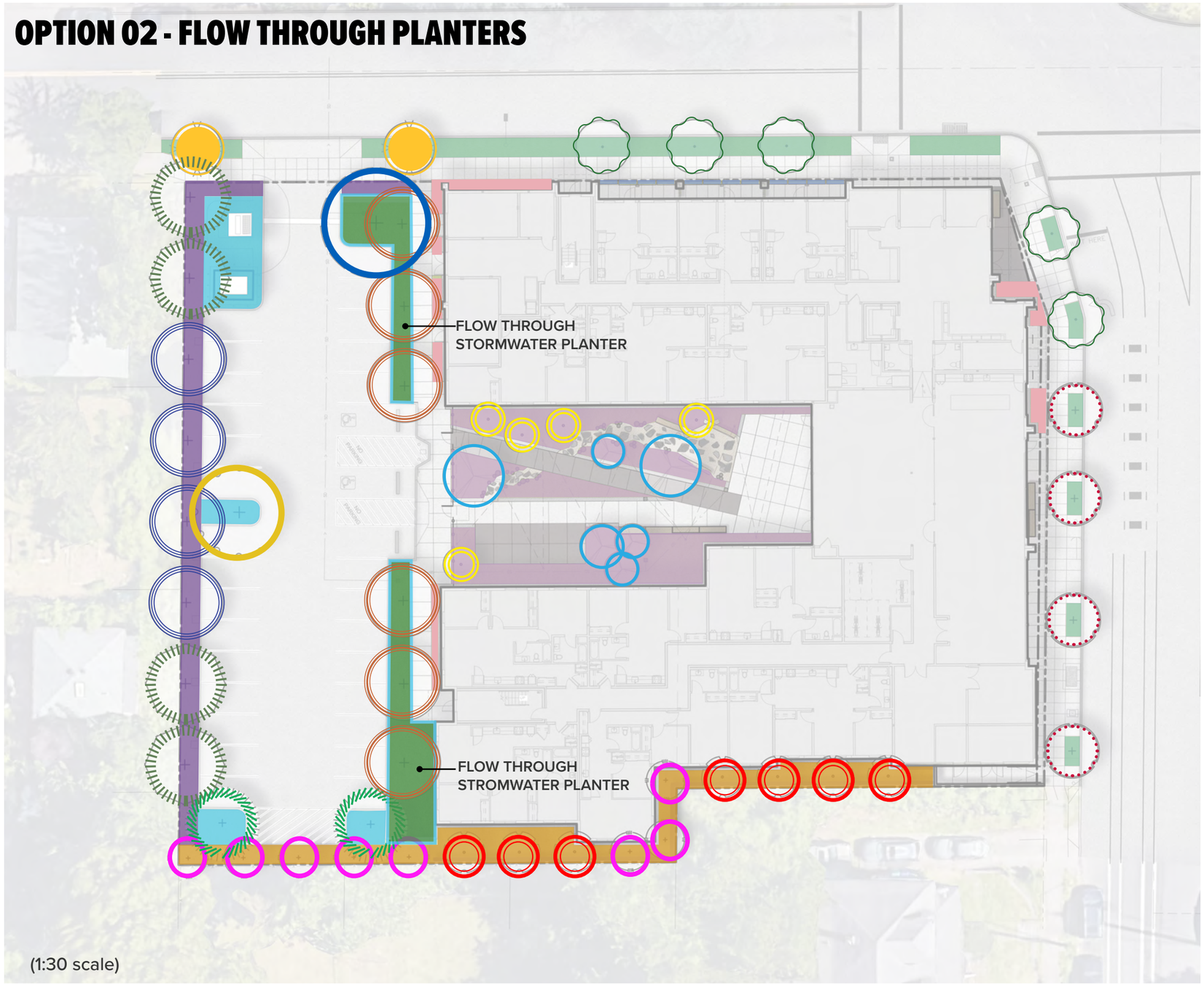

(1:30 scale)

Planting Typologies

- L2 SCREENING
- L3 SCREENING
- RIGHT OF WAY PLANTING
- P1 LANDSCAPING
- PLANTING TYPE 1
- PLANTING TYPE 2
- PLANTING TYPE 3
- STORMWATER / P1 PLANTING

Street Trees

- Cladrastis kentuckea (American Yellowwood)
- Styphnolobium japonicum (Japanese pagoda tree)

On-Site Trees

- Liriodendron tulipifera (Tulip Poplar)
- Platanus x Acerifolia (London Plane Tree)
- Pseudotsuga menziesii (Douglas Fir)
- Calocedrus decurrens (Incense Cedar)
- Nyssa sylvatica (Black Tupelo)
- Alnus rubra (Red Alder)
- Populus tremuloides (Quaking Aspen)
- Amelanchier x grandiflora (Autumn Brilliance Serviceberry)
- Acer rubrum 'bowhall' (Bowhall Red Maple)
- Magnolia stellata (Star Magnolia)

Approved
City of Portland
Bureau of Development Services
Planner _____
Date 02-07-2024
* This approval applies only to the reviews requested and is subject to all conditions of approval. Additional zoning requirements may apply.

L3 SCREENING
6' HT. EVERGREEN SHRUBS

Abelia 'Edward Goucher'
(Edward Goucher Abelia)

Arctostaphylos columbiana
(Hairy Manzanita)

Myrica californica
(Pacific Wax Myrtle)

Ceanothus 'Point Reyes'
(Point Reyes Ceanothus)

Liriope spicata
(Creeping Lilyturf)

Arctostaphylos uva-ursi
(Kinnikinnick)

Spiraea betulifolia
(Birchleaf Spiraea)

Approved
City of Portland
Bureau of Development Services
Planner _____
Date 02-07-2024
* This approval applies only to the reviews requested and is subject to all conditions of approval. Additional zoning requirements may apply.

© 2023 HOLST ARCHITECTURE INC.

L2 SCREENING
3' HT. EVERGREEN SHRUBS

Myrica californica
(Pacific Wax Myrtle)

Ilex crenata
(Japanese Holly)

Cistus 'Bennet's White'
(Bennet's White Rockrose)

Liriope spicata
(Creeping Lilyturf)

Ceanothus 'Point Reyes'
(Point Reyes Ceanothus)

Arctostaphylos uva-ursi
(Kinnikinnick)

Spiraea betulifolia
(Birchleaf Spiraea)

Approved
City of Portland
Bureau of Development Services
Planner _____
Date 02-07-2024
*This approval applies only to the reviews requested and is subject to all conditions of approval. Additional zoning requirements may apply.

© 2023 HOLST ARCHITECTURE INC.

P1 INTERIOR
LOW SHRUBS, GRASSES

Liriope spicata
(Creeping Lilyturf)

Arctostaphylos uva-ursi
(Kinnikinnick)

Spiraea betulifolia
(Birchleaf Spiraea)

Rosmarinus officinalis
(Rosemary)

Mahonia repens
(Creeping Oregon Grape)

ROW PLANTING
TREE WELLS

Liriope spicata
(Creeping Lilyturf)

Arctostaphylos uva-ursi
(Kinnikinnick)

Approved
City of Portland
Bureau of Development Services

Planner _____

Date 02-07-2024

* This approval applies only to the reviews requested and is subject to all conditions of approval. Additional zoning requirements may apply.

© 2023 HOLST ARCHITECTURE INC.

STORMWATER PLANTINGS
FLOW THROUGH PLANTERS

Spiraea betulifolia
(Birchleaf Spiraea)

Carex tumulicola
(Berkeley Sedge)

Juncus effesus
(Soft Rush)

Camassia quamash
(Common Camas)

Lonicera involucrata
(Twinberry Honeysuckle)

Alnus rubra
(Red Alder)

Quercus phellos
(Willow Oak)

Approved
City of Portland
Bureau of Development Services

Planner _____

Date 02-07-2024

*This approval applies only to the reviews requested and is subject to all conditions of approval. Additional zoning requirements may apply.

© 2023 HOLST ARCHITECTURE INC.

PLANTING TYPE 1
COURTYARD PLANTINGS

Ilex crenata
(Japanese Holly)

Sarcococca ruscifolia
(Fragrant Sweetbox)

Polystichum munitum
(Western Sword Fern)

Carex tumulicola
(Berkeley Sedge)

Carex oshimensis ‘Evergold’
(Evergold Japanese Sedge)

Pennisetum spathiolatum
(Veldt Grass)

Epimedium x youngianum
(Nieveum Bishop’s Hat)

Achillea millefolium
(Willamette Gray Yarrow)

Delosperma ‘Jewel of the Desert’
(Jewel of the Desert Ice Plant)

Approved
City of Portland
Bureau of Development Services

Planner _____

Date 02-07-2024

* This approval applies only to the reviews requested and is subject to all conditions of approval. Additional zoning requirements may apply.

© 2023 HOLST ARCHITECTURE INC.

PLANTING TYPE 2
FRONTAGE PLANTINGS

Liriope spicata
(Creeping Lilyturf)

Lonicera pileata
(Privet Honeysuckle)

PLANTING TYPE 3
RAISED PLANTERS

Hakonechloa macra
(Japanese Forest Grass)

Polystichum munitum
(Western Sword Fern)

Liriope spicata
(Creeping Lilyturf)

Approved
City of Portland
Bureau of Development Services

Planner _____

Date 02-07-2024

*This approval applies only to the reviews requested and is subject to all conditions of approval. Additional zoning requirements may apply.

© 2023 HOLST ARCHITECTURE INC.

LU 23-103655 DZ Exhibit C.43

TREES

Cladrastis kentuckea
(American Yellowwood)

Styphnolobium japonicum
(Japanese pagoda tree)

Parrotia persica
(Persian Ironwood)

Liriodendron tulipifera
(Tulip Poplar)

Pseudotsuga menziesii
(Douglas Fir)

Calocedrus decurrens
(Incense Cedar)

Nyssa sylvatica
(Black Tupelo)

Populus tremuloides
(Quaking Aspen)

Approved
City of Portland
Bureau of Development Services

Planner _____

Date 02-07-2024

*This approval applies only to the reviews requested and is subject to all conditions of approval. Additional zoning requirements may apply.

HOLST
© 2023 HOLST ARCHITECTURE INC.

STRONG PROPERTY
4931-4947 N WILLIAMS AVE
PORTLAND, OR 97217

GROUNDWORKSHOP

DESIGN REVIEW
01.30.2024

title : LANDSCAPE

LU NO. 23-103655 DZM

sheet : C.47

LU 23-103655 DZ Exhibit C.44

TREES

Amelanchier x grandiflora
(Autumn Brilliance Serviceberry)

Acer rubrum ‘bowhall’
(Bowhall Red Maple)

Magnolia stellata
(Star Magnolia)

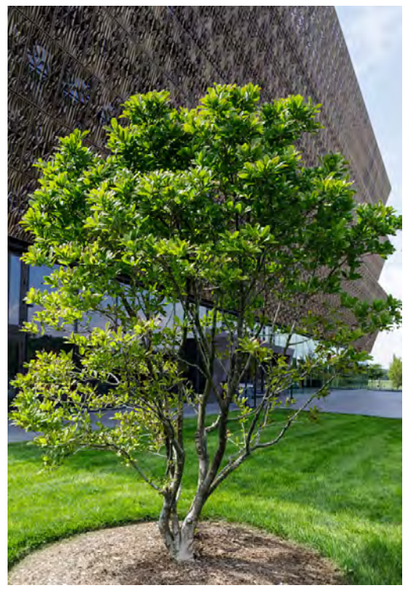

Platanus x Acerifolia
(London Plane Tree)

Approved
City of Portland
Bureau of Development Services
Planner
Date 02-07-2024
* This approval applies only to the reviews requested and is subject to all conditions of approval. Additional zoning requirements may apply.

© 2023 HOLST ARCHITECTURE INC.

OPTION 01 - DRYWELLS

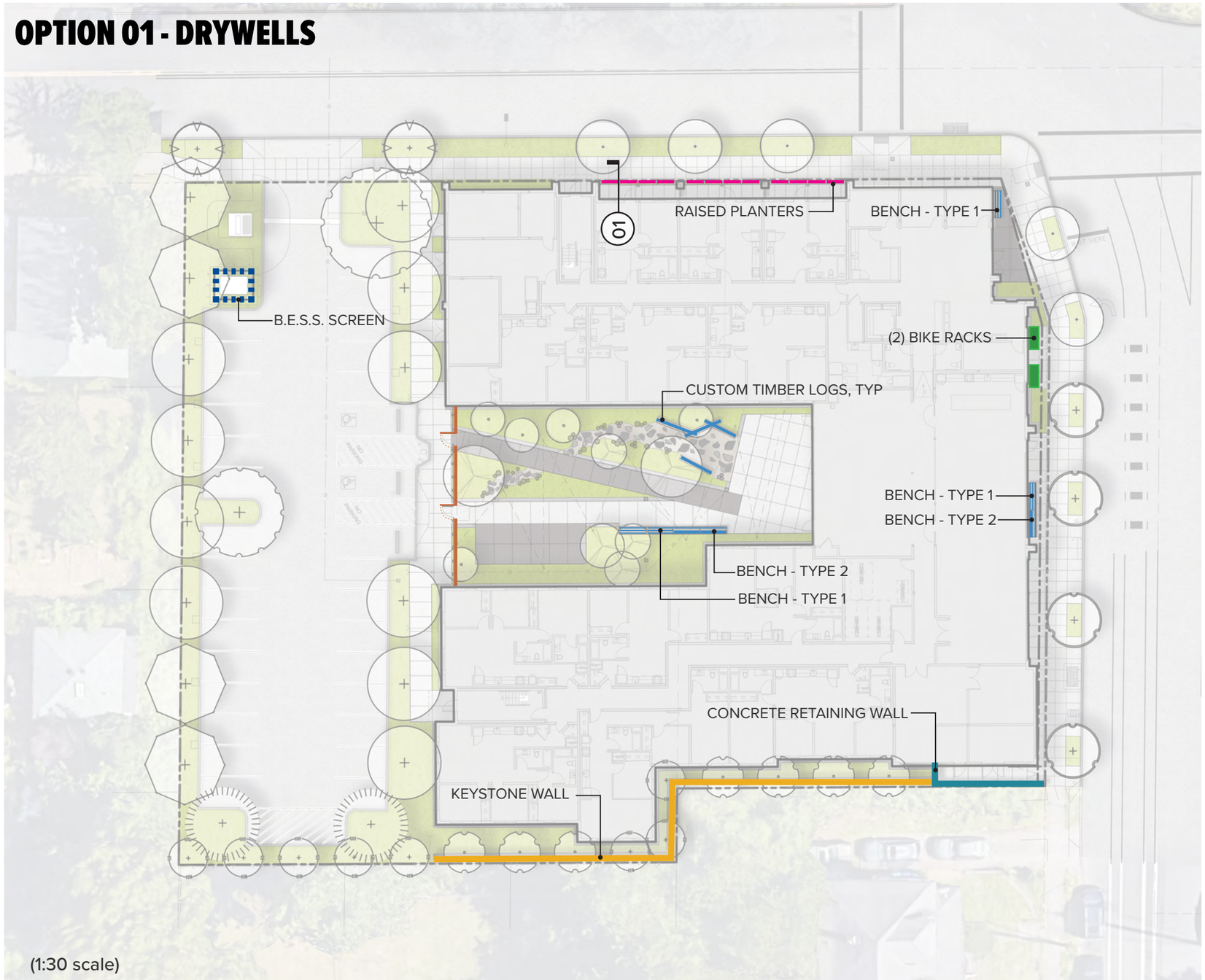

- B.E.S.S F2 SCREEN
- 72” HT. WOOD PICKET SCREEN
- 36” MAX HT. CONCRETE RETAINING WALL
- 36” MAX HT. KEYSTONE RETAINING WALL
- FLOW THROUGH PLANTER WALL
- SHORT-TERM BIKE RACK
- BENCH - TYPE 1
- BENCH - TYPE 2 (BACKED)
- CUSTOM TIMBER LOGS
- RAISED PLANTER

Approved
City of Portland
Bureau of Development Services
Planner
Date 02-07-2024
*This approval applies only to the reviews requested and is subject to all conditions of approval. Additional zoning requirements may apply.

© 2023 HOLST ARCHITECTURE INC.

OPTION 02 - FLOW THROUGH PLANTERS

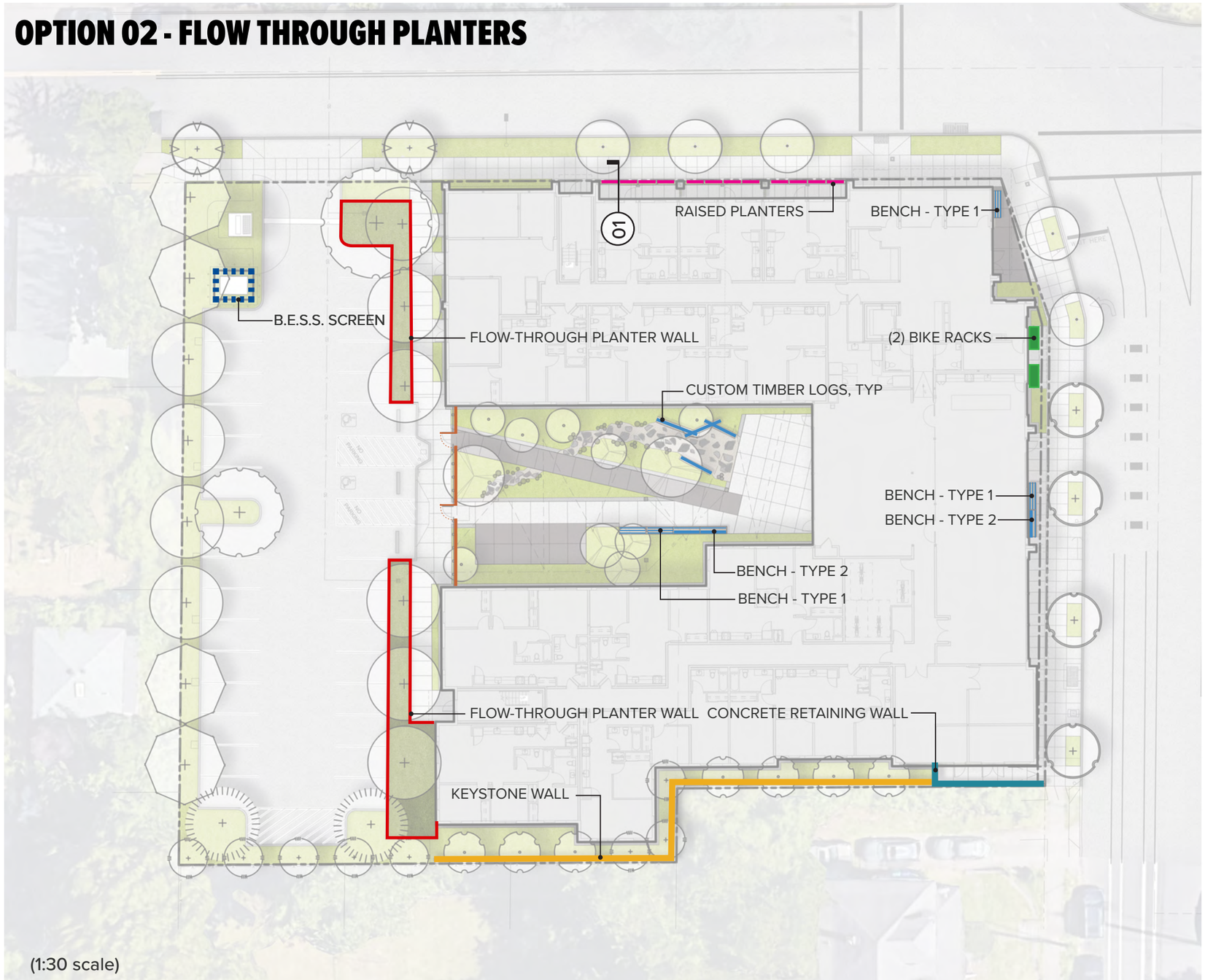

(1:30 scale)

- B.E.S.S F2 SCREEN
- 72” HT. WOOD PICKET SCREEN
- 36” MAX HT. CONCRETE RETAINING WALL
- 36” MAX HT. KEYSTONE RETAINING WALL
- FLOW-THROUGH PLANTER WALL
- SHORT-TERM BIKE RACK
- BENCH - TYPE 1
- BENCH - TYPE 2 (BACKED)
- CUSTOM TIMBER LOGS
- RAISED PLANTER

Approved
City of Portland
Bureau of Development Services
Planner _____
Date 02-07-2024
*This approval applies only to the reviews requested and is subject to all conditions of approval. Additional zoning requirements may apply.

© 2023 HOLST ARCHITECTURE INC.

Link Configuration #3

Benches

(1) Straight Piano Key

(1) Full Back

Bases

(2) Metal Supports

Arms

(2) Backed Arms

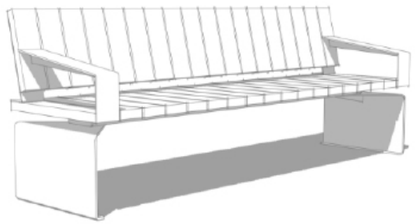

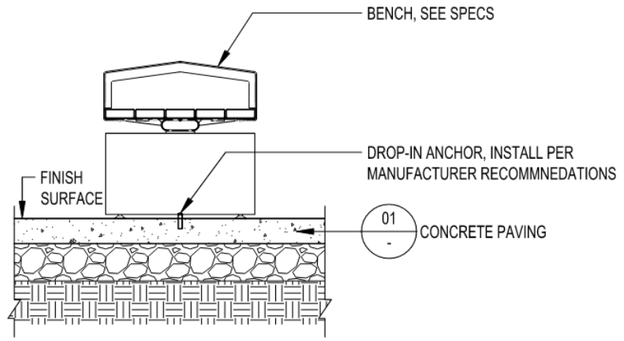

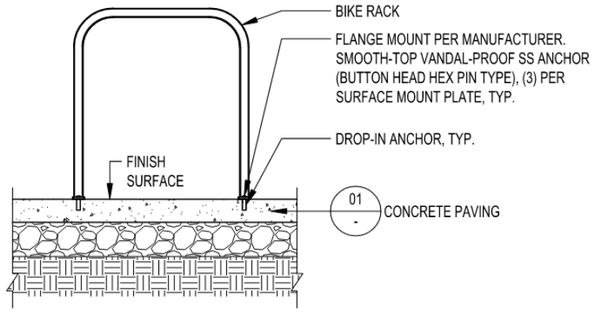

Bench - Type 2

Landscape Forms In-Line Link Bench, with back

Bench - Type 1

Landscape Forms in-line Link Bench, backless

Bike Rack

Huntco Burnside

Approved
City of Portland
Bureau of Development Services

Planner _____

Date 02-07-2024

* This approval applies only to the reviews requested and is subject to all conditions of approval. Additional zoning requirements may apply.

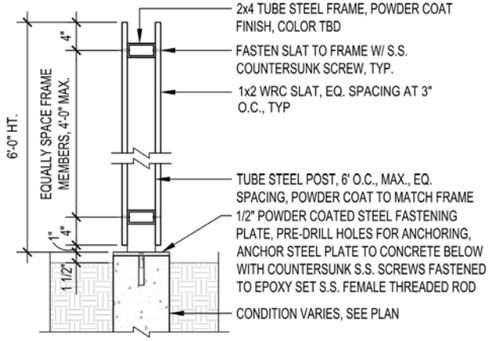

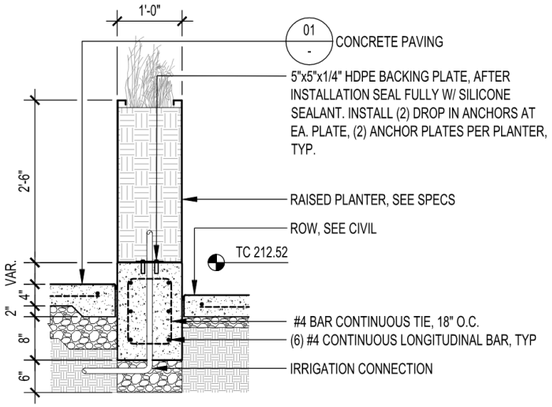

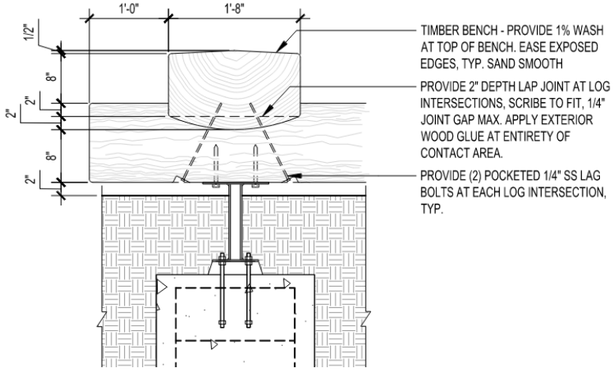

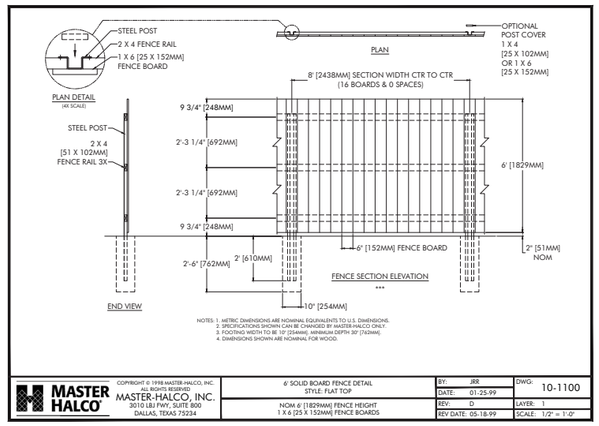

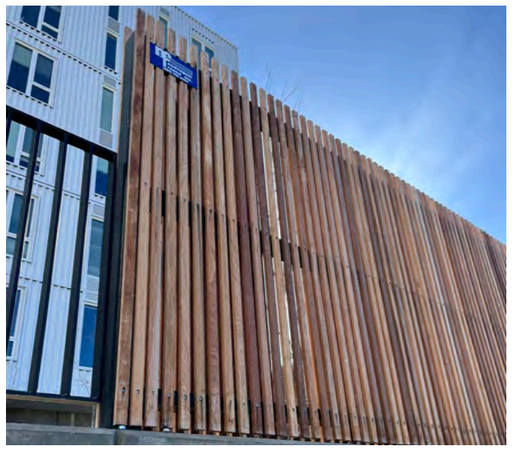

Wood Picket Screen
Tube Steel frame with vertical wood pickets

Raised Planter
12x60x30 raised steel planter

Custom Timber Log
Custom milled stacked timbers

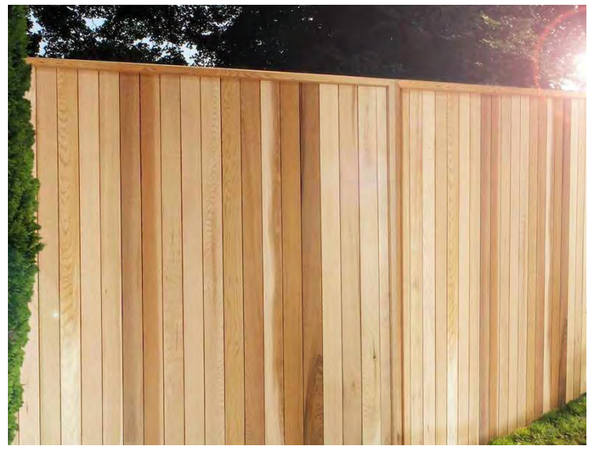

B.E.S.S. SCREEN
Master-Halco Postmaster vertical cedar slat fence

Approved
City of Portland
Bureau of Development Services
Planner _____
Date 02-07-2024
* This approval applies only to the reviews requested and is subject to all conditions of approval. Additional zoning requirements may apply.

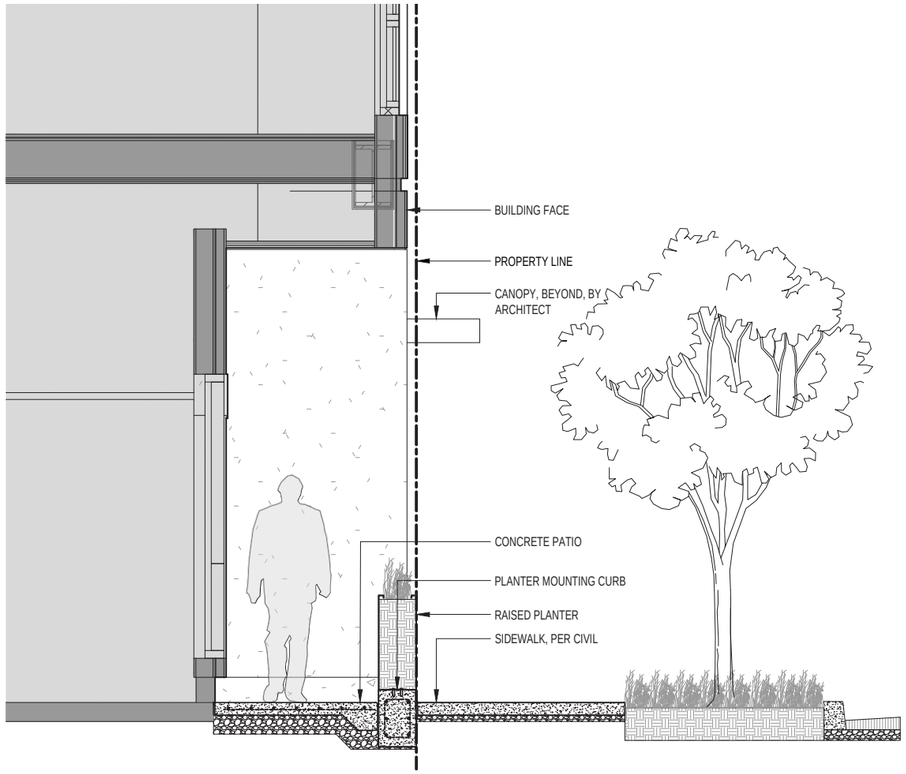

01 Private Patio Section

1/4" = 1'-0"

Approved
City of Portland
Bureau of Development Services

Planner _____

Date 02-07-2024

* This approval applies only to the reviews requested and is subject to all conditions of approval. Additional zoning requirements may apply.

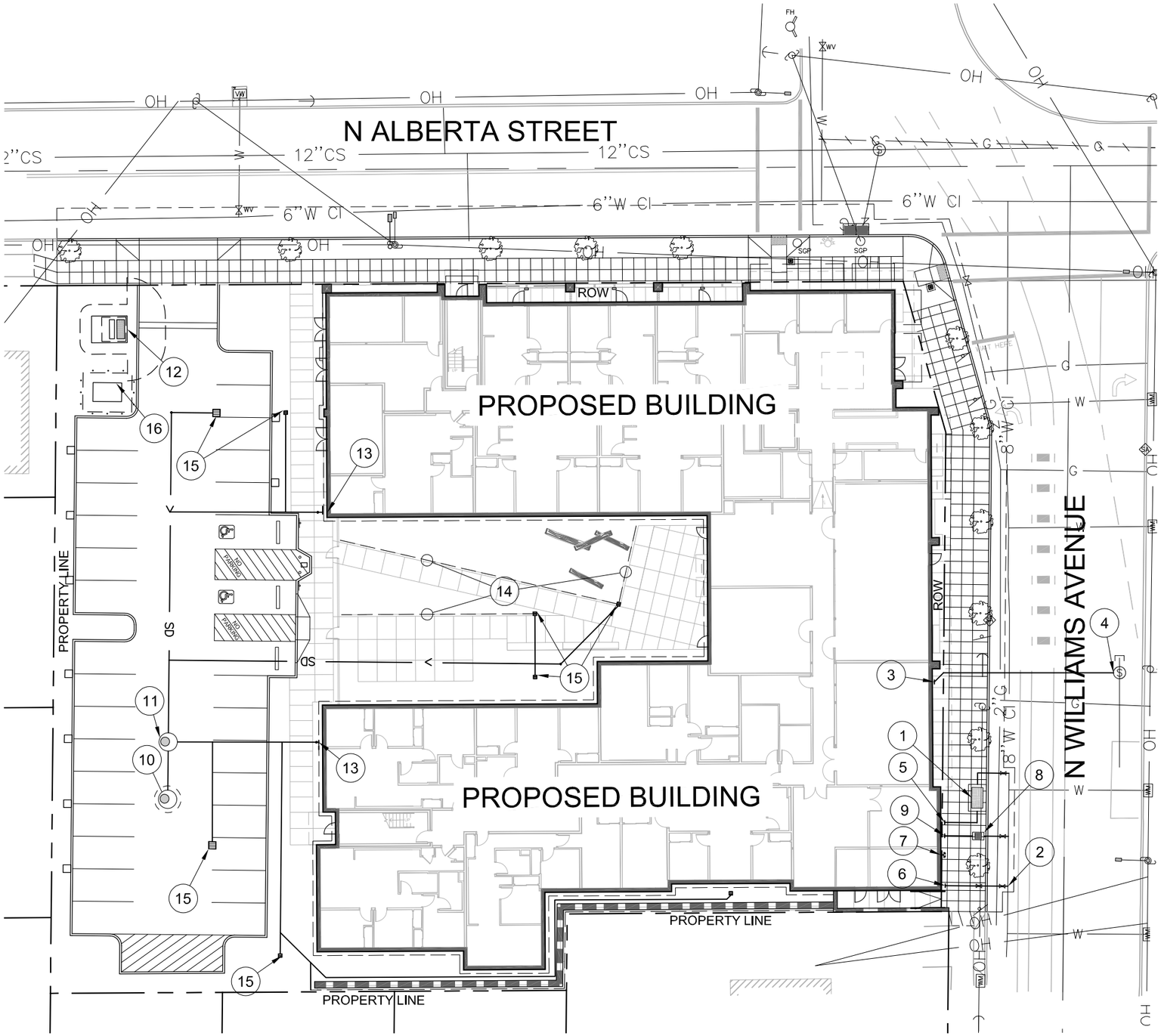

UTILITY PLAN

SCALE: 1"=30'

CONSTRUCTION NOTES

1. NEW 4" WATER METER, BY PORTLAND WATER BUREAU.
2. NEW 6" FIRE LINE, BY PORTLAND WATER BUREAU.
3. NEW SANITARY CONNECTION FROM BUILDING
4. 8" SEWER CONNECTION TO COMBINED SEWER MAINTENANCE HOLE.
5. 4" DOMESTIC WATER CONNECTION TO BUILDING. PREMISES-ISOLATION (PI) DCVA TO BE INSTALLED IN BUILDING PER WATER BUREAU REQUIREMENTS.
6. 6" FIRE CONNECTION TO BUILDING. PREMISES-ISOLATION (PI) DCDA TO BE INSTALLED IN BUILDING PER WATER BUREAU REQUIREMENTS.
7. FIRE DEPARTMENT CONNECTION MOUNTED TO BUILDING FACE.
8. IRRIGATION METER, BY PORTLAND WATER BUREAU.
9. IRRIGATION CONNECTION TO BUILDING. PREMISES-ISOLATION (PI) DCDA TO BE INSTALLED IN BUILDING PER WATER BUREAU REQUIREMENTS.
10. DRYWELL, 10' PERFORATED SECTION, 40' TOTAL DEPTH
11. SEDIMENT MANHOLE, 10' TOTAL DEPTH.
12. PP&L PAD-MOUNTED TRANSFORMER VAULT.
13. STORM CONNECTION FROM BUILDING FOR ROOF DRAINAGE.
14. FRENCH DRAIN.
15. AREA DRAIN.
16. PAD-MOUNTED BATTERY ENERGY STORAGE SYSTEM.

STORMWATER NARRATIVE

PRIVATE SITE

STORMWATER RUNOFF FROM PROPOSED ROOF AND PAVED SURFACES WILL BE DIRECTED TO THE DRYWELL SYSTEM. THE DRYWELL SYSTEM IS DESIGNED TO FULLY INFILTRATE THE 100-YR STORM EVENT.

PUBLIC STREET IMPROVEMENTS

STORMWATER RUNOFF IN THE PUBLIC RIGHT-OF-WAY FOLLOWS THE EXISTING DRAINAGE PATTERN AND IS COLLECTED VIA NEW CATCH BASINS AND DIRECTED TO THE PUBLIC COMBINED SEWER SYSTEM.

UTILITY CONTACTS

ELECTRICAL
CLEO NARANJO
INTERFACE ENGINEERING, INC
CLEON@INTERFACEENG.COM
(503) 382-2724

BES
ROD KRAUTER
BUREAU OF ENVIRONMENTAL SERVICES
RODNEY.KRAUTER@PORTLANDOREGON.GOV
(503) 823-2073

WATER
KARI ANN SPOON
PORTLAND WATER BUREAU
KARIANN.SPOON@PORTLANDOREGON.GOV

N

0 30 60

1 INCH = 30 FEET

Approved
City of Portland
Bureau of Development Services
Planner
Date 02-07-2024
* This approval applies only to the reviews requested and is subject to all conditions of approval. Additional zoning requirements may apply.

© 2023 HOLST ARCHITECTURE INC.

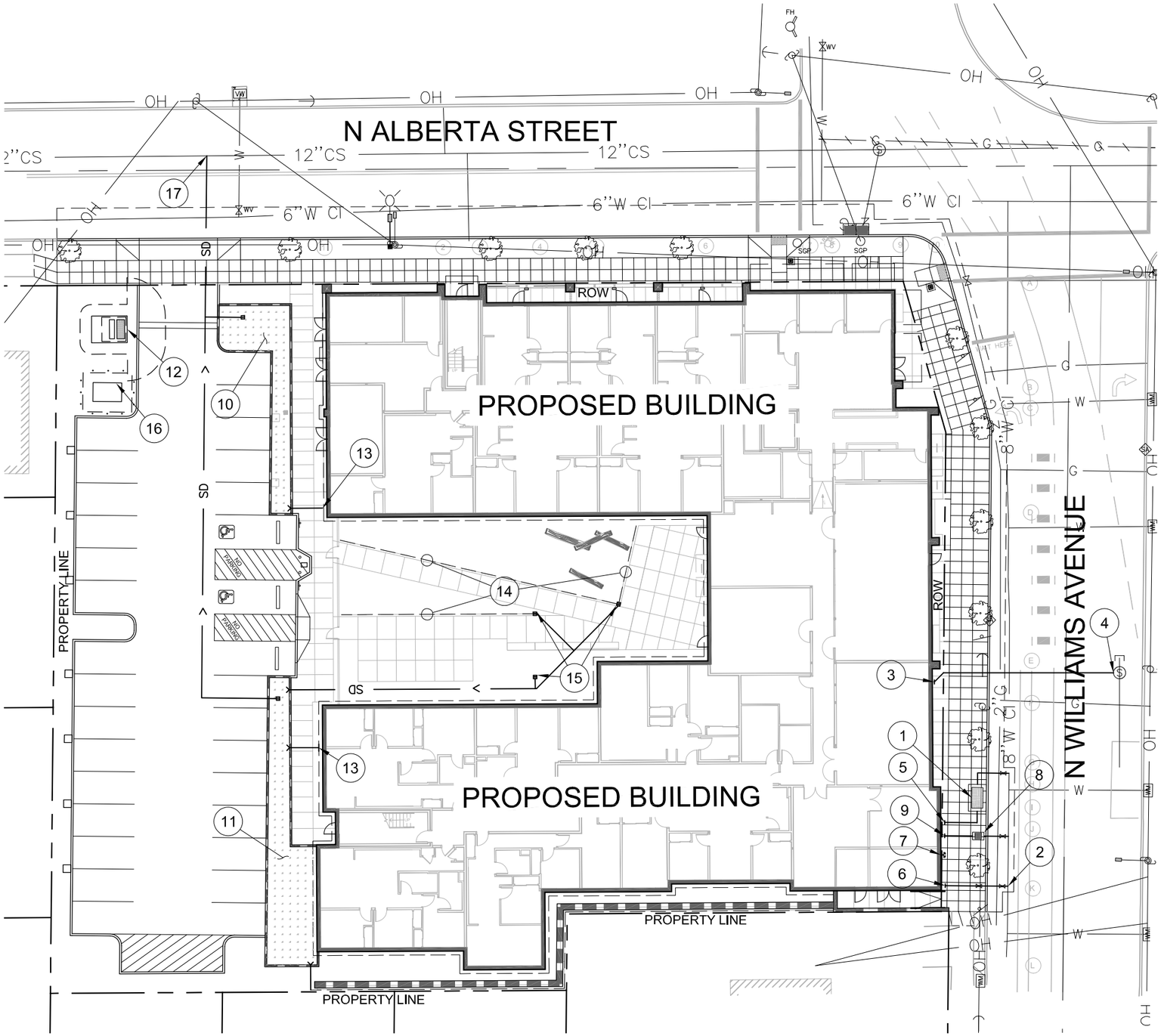

UTILITY PLAN

SCALE: 1"=30'

CONSTRUCTION NOTES

1. NEW 4" WATER METER, BY PORTLAND WATER BUREAU.
2. NEW 6" FIRE LINE, BY PORTLAND WATER BUREAU.
3. NEW SANITARY CONNECTION FROM BUILDING
4. 8" SEWER CONNECTION TO COMBINED SEWER MAINTENANCE HOLE.
5. 4" DOMESTIC WATER CONNECTION TO BUILDING. PREMISES-ISOLATION (PI) DCVA TO BE INSTALLED IN BUILDING PER WATER BUREAU REQUIREMENTS.
6. 6" FIRE CONNECTION TO BUILDING. PREMISES-ISOLATION (PI) DCDA TO BE INSTALLED IN BUILDING PER WATER BUREAU REQUIREMENTS.
7. FIRE DEPARTMENT CONNECTION MOUNTED TO BUILDING FACE.
8. IRRIGATION METER, BY PORTLAND WATER BUREAU.
9. IRRIGATION CONNECTION TO BUILDING. PREMISES-ISOLATION (PI) DCDA TO BE INSTALLED IN BUILDING PER WATER BUREAU REQUIREMENTS.
10. 423 SF LINED FLOW-THROUGH STORMWATER PLANTER
11. 641 SF LINED FLOW-THROUGH STORMWATER PLANTER.
12. PP&L PAD-MOUNTED TRANSFORMER VAULT.
13. STORM CONNECTION FROM BUILDING FOR ROOF DRAINAGE.
14. FRENCH DRAIN.
15. AREA DRAIN.
16. PAD-MOUNTED BATTERY ENERGY STORAGE SYSTEM.
17. 8" SEWER CONNECTION TO 12" COMBINED SEWER MAIN.

STORMWATER NARRATIVE

PRIVATE SITE

STORMWATER RUNOFF FROM PROPOSED ROOF AND PAVED SURFACES WILL BE DIRECTED TO (2) FLOW-THROUGH STORMWATER PLANTERS. THE FLOW-THROUGH PLANTERS SYSTEM WILL DISCHARGE TO THE COMBINED SEWER MAIN IN N ALBERTA STREET.

PUBLIC STREET IMPROVEMENTS

STORMWATER RUNOFF IN THE PUBLIC RIGHT-OF-WAY FOLLOWS THE EXISTING DRAINAGE PATTERN AND IS COLLECTED VIA NEW CATCH BASINS AND DIRECTED TO THE PUBLIC COMBINED SEWER SYSTEM.

UTILITY CONTACTS

ELECTRICAL
CLEO NARANJO
INTERFACE ENGINEERING, INC
CLEON@INTERFACEENG.COM
(503) 382-2724

BES
ROD KRAUTER
BUREAU OF ENVIRONMENTAL SERVICES
RODNEY.KRAUTER@PORTLANDOREGON.GOV
(503) 823-2073

WATER
KARI ANN SPOON
PORTLAND WATER BUREAU
)PORTLANDOREGON.GOV

N

0 30 60

1 INCH = 30 FEET

Approved
City of Portland
Bureau of Development Services
Planner
Date 02-07-2024
* This approval applies only to the reviews requested and is subject to all conditions of approval. Additional zoning requirements may apply.

© 2023 HOLST ARCHITECTURE INC.

UPDATE BACKGROUND

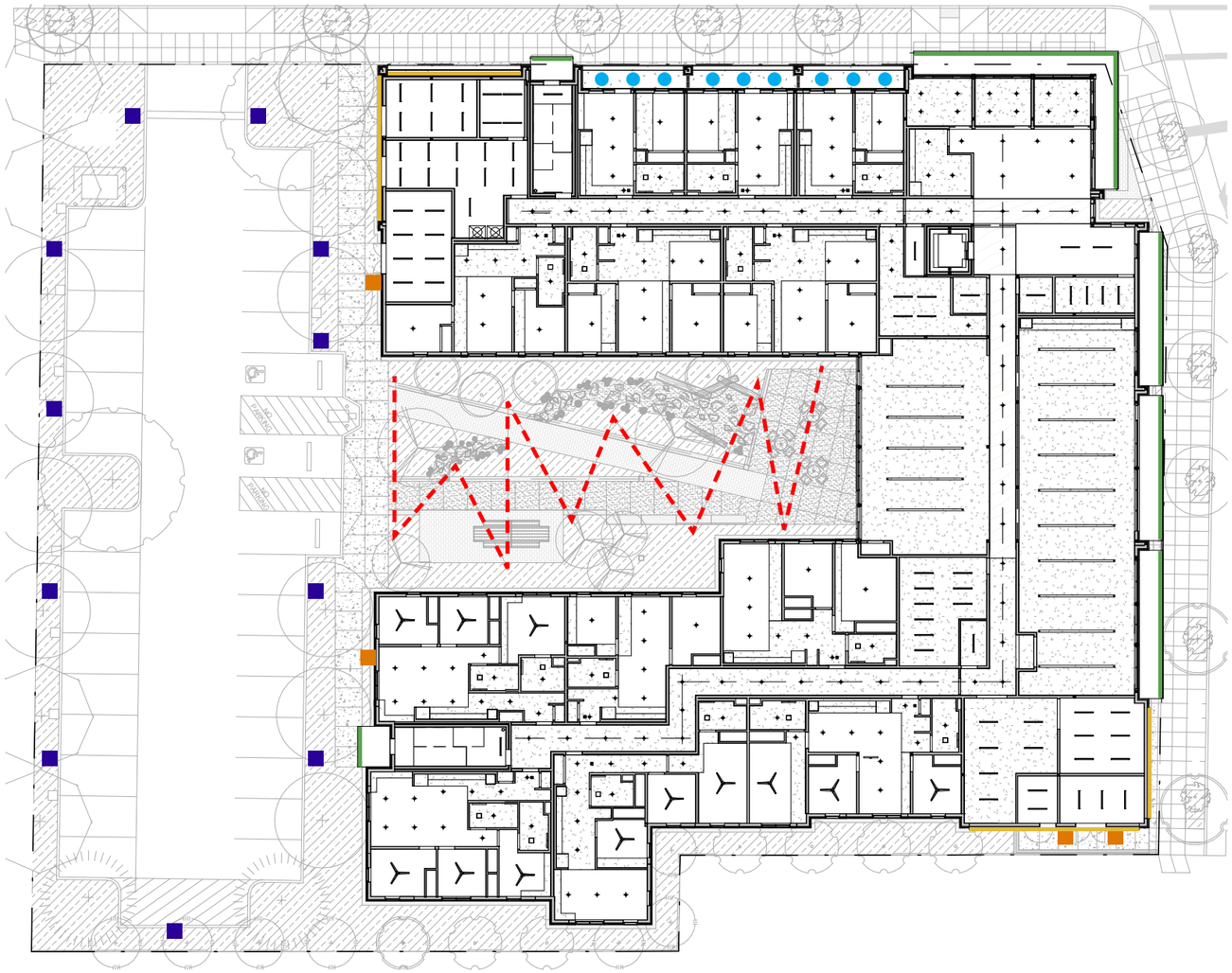

LIGHTING LEGEND

- A — CABLE LIGHT
- B — RECESSED ROUND DOWNLIGHT
- C — RECESSED LINEAR DOWNLIGHT
- D — SURFACE-MOUNTED WALL SCONCE
- E — LINEAR WALL WASH LIGHT
- F — POLE LIGHT

SCALE: 1" = 30' - 0"

0' 15' 30' 60'

N

Approved
City of Portland
Bureau of Development Services

Planner _____

Date 02-07-2024

* This approval applies only to the reviews requested and is subject to all conditions of approval. Additional zoning requirements may apply.

HOLST

© 2023 HOLST ARCHITECTURE INC.

STRONG PROPERTY
4931-4947 N WILLIAMS AVE
PORTLAND, OR 97217

DESIGN REVIEW
01.30.2024

title : LEVEL 01 RCP - SITE LIGHTING PLAN
LU NO. 23-103655 DZM
sheet : C.56

LU 23-103655 DZ Exhibit C.53

LIGHTING

Festoon Mounting

Part# EX-MDA-WH (White)
Part# EX-MDA-BK (Black)

For festoon applications to a catenary cable, our wire-rope adaptors securely hold each socket in place to a 1/16" or 1/8" diameter wire rope. Wire rope and associated mounting hardware is not provided with the system.

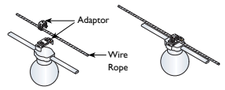

A EXHIBITOR CABLE LIGHTING

gotham | INCITO™
Multiple Layers of Light

Luminaire Type:
Catalog Number:

High Center Beam Round Downlight **4"**

OVERVIEW

Feature Set

- Eleven optimized distribution patterns allow designers to achieve tailored objectives
- Bounding Ray™ optical design
- 45° Cutoff to source and source image
- Field interchangeable optic
- Driver and LED light engine fully serviceable from below ceiling
- 70% lumen maintenance at 60,000 hours
- 2.5 SDCM; 85 CRI typical, 90+ CRI optional
- Fixtures are wet location, covered ceiling
- ENERGY STAR® Certified product

Distribution

Superior Perfomance

Nominal Lumens	500	750	1000	1500	2000	2500	3000	3500	4000	4500	5000
Delivered	703	807	1062	1545	1977	2419	2920	3548	3982	4419	4848
Wattage	6.7	7.5	9.8	15.1	21.5	26.5	34.1	33.8	39.5	46.2	53.2
Efficacy	104	108	108	102	92	91	86	105	101	96	91

*Based on 3500K 80CRI 35D AR LSS

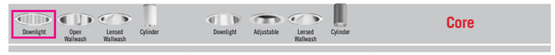

B GOTHAM INCITO RECESSED ROUND DOWNLIGHT

MARK ARCHITECTURAL LIGHTING™

Slot 2 LED
Recessed Linear

Slot 2 LED takes both form and function a step further with increased efficacy and integral controls creating a digitally addressable luminaire that is perfect where visually harmonious illumination and energy efficiency are desired.

Slot 2 LED is the ideal choice for spaces that emphasize lines and clean contemporary design. It is a perfect fit for Armstrong TechZone™ ceiling systems. A regressed lens option provides added dimension to the sleek, slender design and the flush lens now has a Wet Label option.

Type:
Project:
Catalog Number:
DO NOT TYPE HERE. Autopopulated field.

Specification Features

Housing
Nominal 2' x 2', 3', 4', 5', 6', 7', 8' and continuous rows in 1' increments as standard, upper housing fabricated from cold-rolled steel with extruded aluminum ceiling trim.

Finish
Polyester powder coat painted finish.

Reflector
Precision-formed steel; high reflectance matte white powder coat; 93% reflectivity.

Shielding
Flush Lens: Snap-in 90% transmissive satin acrylic lens. Lens is not sealed or gasketed.
Regressed Lens: Lay-in 90% transmissive satin acrylic lens.

Mounting
Recessed. Available for sheetrock, 9/16' slot grid or 15/16' inverted tee ceilings, or 9/16' inverted tee.

Certification
CSA certified to meet U.S. and Canadian standards (UL1598 and UL8750). This product is IC rated. Optional Damp (DPL) or Wet (WL) location listings available with specified nomenclature. Wet location listing is suitable for covered ceiling mount installation only, where any water exposure is beneath the non-porous mount surface.

Warranty
5-year limited warranty. This is the only warranty provided and no other statements in this specification sheet create any warranty of any kind. All other express and implied warranties are disclaimed. Complete warranty terms located at: www.acuitybrands.com/support/warranty/terms-and-conditions

A+ Capable Luminaire
This item is an A+ capable luminaire, which has been designed and tested to provide consistent color appearance and out-of-the-box control compatibility with simple commissioning when used with Acuity Brands controls products.
All configurations of this luminaire are calibrated and tested to meet the Acuity Brands' specification for chromatic consistency - including color rendering, color fidelity, and color temperature tolerance around standard CIE chromaticity coordinates.
To learn more about Acuity A+ standards, specifications, and testing, visit www.acuitybrands.com/aplus

***Note:** Actual performance may differ as a result of end-user environment and application.*
All values are design or typical values, measured under laboratory conditions at 25 °C.
Specifications subject to change without notice.

Technical Drawing

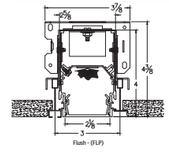

C MARK SLOT 2 LED RECESSED LINEAR

WDGE1 LED
Architectural Wall Sconce

Catalog Number
Notes
Type
Hit the Tab key or mouse over the page to see all interactive elements.

Specifications

Depth (D1):	5.5"
Depth (D2):	1.5"
Height:	8"
Width:	9"
Weight: (without options)	9 lbs

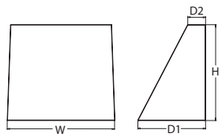

Introduction

The WDGE LED family is designed to meet specifier's every wall-mounted lighting need in a widely accepted shape that blends with any architecture. The clean rectilinear design comes in four sizes with lumen packages ranging from 1,200 to 25,000 lumens, providing true site-wide solution.

WDGE1 delivers up to 2,000 lumens with a soft, non-pixelated light source, creating a visually comfortable environment. The compact size of WDGE1, with its integrated emergency battery backup option, makes it an ideal over-the-door wall-mounted lighting solution.

WDGE LED Family Overview

Luminaire	Standard EM, 0°C	Cold EM, -20°C	Sensor	Lumens (4000K) P1	P2	P3	P4	P5	P6
WDGE1 LED	4W	--	--	1,200	2,000	--	--	--	--
WDGE2 LED	10W	18W	Standalone / nLight	1,200	2,000	3,000	4,500	6,000	--
WDGE3 LED	15W	18W	Standalone / nLight	7,500	8,500	10,000	12,000	--	--
WDGE4 LED	--	--	Standalone / nLight	12,000	16,000	18,000	20,000	22,000	25,000

D WDGE1 LED WALL SCONCE

MARK ARCHITECTURAL LIGHTING™

The SPR LED Series

SPR LED combines the environmental and cost-saving benefits of solid-state lighting with the popular SP design. The result is a recessed linear wall product that provides an excellent balance of efficiency and performance.

SPR LED, which features a very compact profile, offers highly uniform illumination along wall surfaces. Housing and vertical fascias are extruded aluminum, and the extruded clear frosted acrylic lens snaps into the housing. SPR LED is available in 8-, 7-, 6-, 5-, 4-, 3-, and 2-foot sections. Corners are available; please consult factory.

Type:
Project:
Catalog Number:
DO NOT TYPE HERE. Autopopulated field.

Specification Features (continued on page 2)

Housing
Housing and vertical fascias are extruded aluminum. Internal wiring trays are 20-gauge, cold-rolled steel.

Housing Finish
Natural Aluminium; Fascia is high reflectance matte white .

Shielding
Extruded clear frost acrylic lens snaps into housing.

Mounting
Recessed perimeter wall wash in 8', 7', 6', 5', 4', 3', and 2' sections.

Fixture Performance - SPRL

Lumens Output	400 LMF	600 LMF	800 LMF	1000 LMF
Delivered Lumens (l/ft)	367	632	856	1078
Input Watts	3.4	5.8	8.0	10.5
Lumen/Watt	106.8	108.8	106.7	102.8

Results based on a 4FT 80CRI 35K luminaire.
Consult factory for customized lumen and wattage based on calculated values.

Technical Drawings

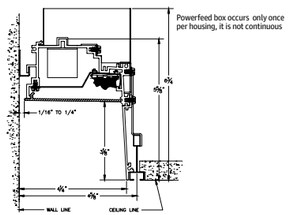

E MARK SPR LINEAR WALL WASH

D-Series Size 1
LED Area Luminaire

Catalog Number
Notes
Type
Hit the Tab key or mouse over the page to see all interactive elements.

Introduction

The modern styling of the D-Series features a highly refined aesthetic that blends seamlessly with its environment. The D-Series offers the benefits of the latest in LED technology into a high performance, high efficacy, long-life luminaire.

The photometric performance results in sites with excellent uniformity, greater pole spacing and lower power density. D-Series outstanding photometry aids in reducing the number of poles required in area lighting applications with typical energy savings of 65% and expected service life of over 100,000 hours.

Specifications

EPA:	0.69 ft² (0.06 m²)
Length:	32.71" (83.1 cm)
Width:	14.26" (36.2 cm)
Height H1:	7.88" (20.0 cm)
Height H2:	2.73" (6.9 cm)
Weight:	34 lbs (15.4 kg)

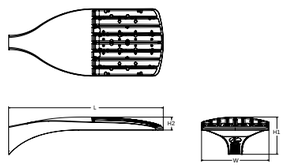

Ordering Information

EXAMPLE: DSX1 LED P7 40K 70CRI T3M MVOLT SPA NLTAIR2 PIRHN DDBXD

DSX1 LED

Series	LEDs	Color temperature[3]	Color Rendering Index[4]	Distribution	Voltage	Mounting
DSX1 LED	**Forward optics**	(this section 70CRI only)		AFR Automotive front row	MVOLT (120V-277V)[6]	**Shipped included**
	P1 P6	30K 3000K	70CRI	T1S Type I short	HVOLT (347V-480V)[5,6]	SPA Square pole mounting (#8 drilling)
	P2 P7	40K 4000K	70CRI	T2M Type II medium	XVOLT (277V - 480V)[7,8]	RPA Round pole mounting (#8 drilling)
	P3 P8	50K 5000K	70CRI	T3M Type III medium	120[9,26]	SPAS Square pole mounting #5 drilling[9]
	P4 P9	(this section 80CRI only, extended lead times apply)		T3LG Type III low glare[3]	208[9,26]	
	P5			T4M Type IV medium	240[9,26]	
				T5M Type V medium		
				T5LG Type V low glare		
				T5W Type V wide		
				BLC3 Type III backlight control[3]		
				BLC4 Type IV backlight control[3]		

F LITHONIA D-SERIES POLE LIGHT

Approved
City of Portland
Bureau of Development Services
Planner _____
Date 02-07-2024
* This approval applies only to the reviews requested and is subject to all conditions of approval. Additional zoning requirements may apply.

© 2023 HOLST ARCHITECTURE INC.

MATERIALS

FCP-X, FIBER CEMENT PANEL

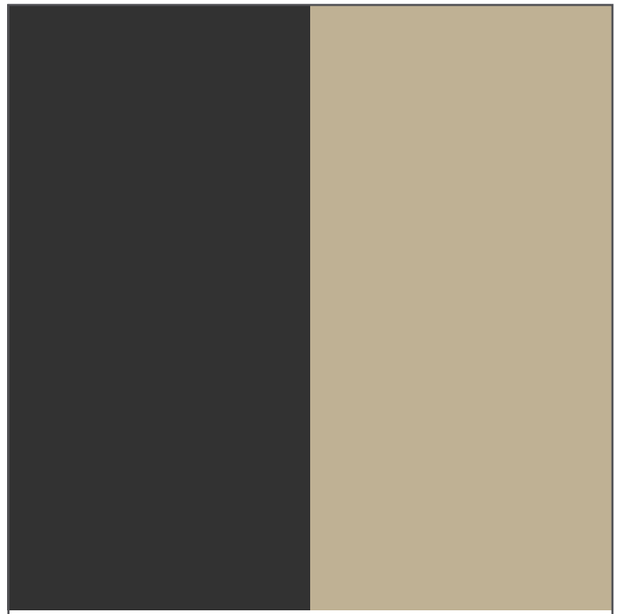

MANUFACTURER: JAMES HARDIE
PRODUCT: PANEL SMOOTH
COLOR: CUSTOM
SIZE: 4’H x 10’L x 3/8”D

FCS-X, FIBER CEMENT LAP SIDING

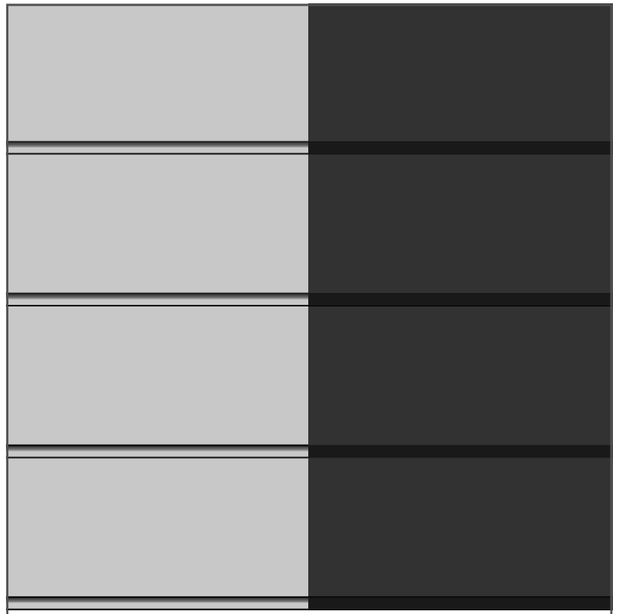

MANUFACTURER: JAMES HARDIE
PRODUCT: ARTISAN V GROOVE
COLOR: CUSTOM
SIZE: 7”H x 12’L x 5/8”D

WDX-1, T&G CEDAR SIDING

PRODUCT: T&G WESTERN RED CEDAR
SIZE: 3/4”D X 3 1/2”W

Approved
City of Portland
Bureau of Development Services
Planner
Date 02-07-2024
*This approval applies only to the reviews requested and is subject to all conditions of approval. Additional zoning requirements may apply.

MATERIALS

SF-1, ALUMINUM STOREFRONT ENTRANCES

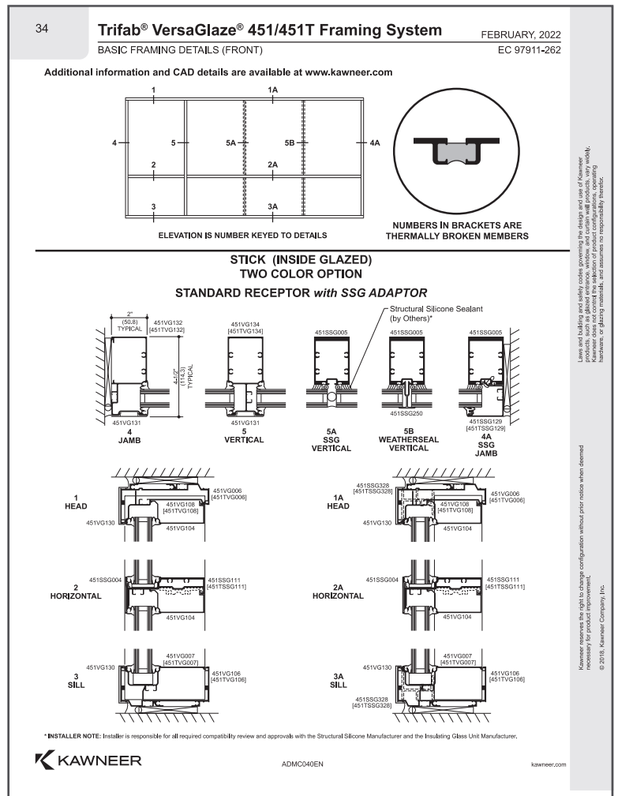

MANUFACTURER: KAWNEER
TYPE: 415T FRAMING, WEATHERSEAL JOINTS
COLOR: CUSTOM, ADOBE

WND-X, VINYL WINDOW

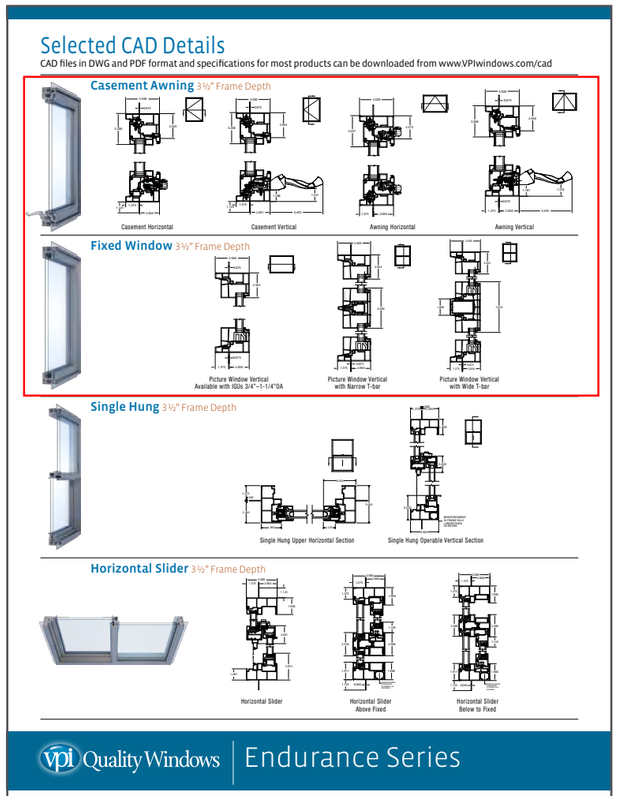

MANUFACTURER: VPI ENDURANCE SERIES
TYPE: FIXED AND CASEMENT
COLOR: ADOBE EXTERIOR

ST-X, ACRYLIC STUCCO

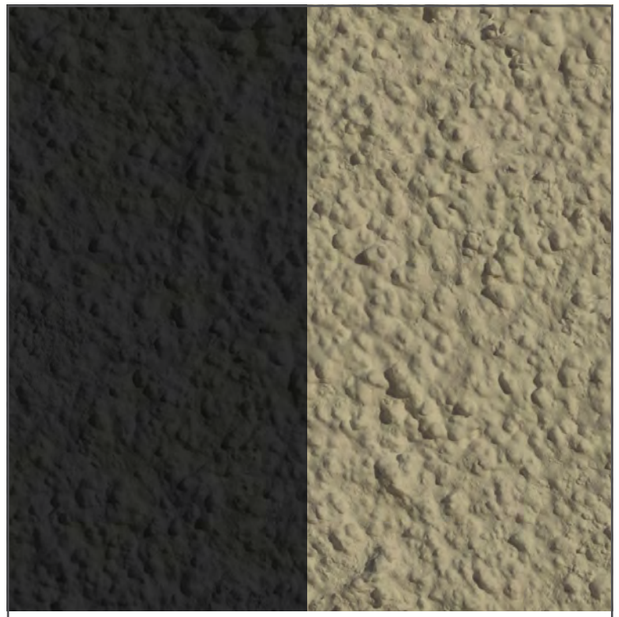

PRODUCT: DRYVIT COMMERCIAL CEMENT PLASTER
COLOR: CUSTOM

Approved
City of Portland
Bureau of Development Services
Planner _____
Date 02-07-2024
*This approval applies only to the reviews requested and is subject to all conditions of approval. Additional zoning requirements may apply.

MECHANICAL

1 RTU - EXHAUST FAN

GREENHECK
Building Value in Air.

Model: USF-15-B6

Universal Single Width Blower

Standard Construction Features: Galvanized steel scroll (optional coated steel or aluminum) with bolted frame, PermaLock seam. Centrifugal backward inclined coated steel (optional aluminum) wheel. Galvanized (optional coated steel or aluminum) inlet cone. Direct driven motor mounted out of the airstream.
Certifications/special requirements: Emergency Smoke Control

Fan Configuration	
Class	I
Arrangement	4
Discharge position	UB
Wheel rotation	CW
Fan material	Steel
Drive type	Direct

Performance	
Requested Volume (CFM)	1,000
Actual Volume (CFM)	1,000
Total External SP (in. wg)	0.75
Operating frequency (Hz)	50
Fan RPM	979
Operating Power (bhp)	0.17
Startup Power (bhp)	0.28
Air Stream Temp (F)	70
Start-up Temp (F)	70
Air Density (lbs/ft^3)	0.074
Elevation (ft)	200
Static Efficiency (%)	71
Outlet Velocity (ft/min)	773

Motor	
Size (hp)	1/3
V/C/P	460/60/3
NEC FLA (Amps)	1.1
Min Circuit Ampacity (MCA)	1.4
Max Overload Production (MOP)	15

FLA - based on tables 150 or 148 of National Electric Code 2002. Actual motor FLA may vary, for sizing thermal overload, consult factory. MCA and MOP values shown only account for the motor, not accessories (damper actuator, field supplied VFD, etc.).

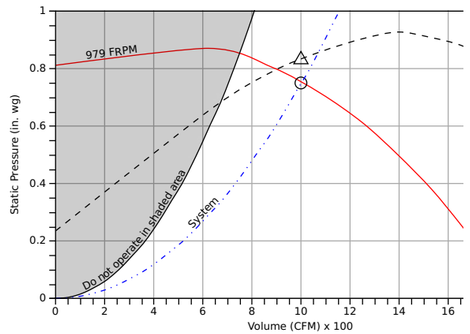

Sound

	Octave Bands (hz)								LwA	dBA	Sones
	62.5	125	250	500	1000	2000	4000	8000			
Inlet	71	69	65	61	56	54	48	41	63	52	6.2
Outlet	85	76	65	61	60	54	48	40	67	55	8.8

amca WORLDWIDE CERTIFIED RATINGS SOUND AND AIR PERFORMANCE

Greenheck Fan Corporation certifies that the model shown herein is licensed to bear the AMCA Seal. The ratings shown are based on tests and procedures performed in accordance with AMCA Publication 211 and AMCA Publication 311 and comply with the requirements of the AMCA Certified Ratings Program.The AMCA certified ratings seal applies to sound and air performance ratings only.Performance certified is for installation type B: Free inlet, ducted outlet.Power rating does not include transmission losses.Performance ratings do not include the effects of appurtenances.The AMCA licensed air and/or sound performance data has been modified for installation, appurtenances, etc. not included in the certified data. The modified performance is not AMCA licensed but is provided to aid in selection and applications of the product.The sound power level ratings are shown in decibels, referred to 10^-12 watts calculated per AMCA Standard 301. The A-weighted sound ratings shown have been calculated per AMCA International Standard 301.Values shown are for inlet Lwi, LwiA and outlet Lwo, LwoA sound power levels for installation Type B: free inlet, ducted outlet. Ratings for outlet sound include the effects of duct end correction.dBA levels are not licensed by AMCA International. The AMCA Certified Ratings Seal for Sound applies to inlet Lwi, LwiA and outlet Lwo, LwoA ratings only.

2 RTU - DOAS

Technical Data Sheet

Job Information	*Technical Data Sheet*
Job Name	
Date	
Submitted By	
Software Version	
Unit Tag	

Unit Overview

Model Number	Voltage V/Hz/Phase	Design Cooling Capacity Btu/hr	AHRi360 Standard Efficiency		ASHRAE 90.1-2019 Compliant
			EER	IEER	
DPS007A	460/60/3	81413	12.6	18.8	ASHRAE 90.1-2019 compliant

Unit

Model Number:	DPS007A
Model Type:	Heat Pump
Heat Type:	Electric
Energy Recovery:	ERW-Med Cab-Econ: 2835 cfm max, 100% OA: 5145 cfm max
Application:	Variable Air Volume, Single Zone (Mixed Air or 100% OA)
Controls:	Microtech III
Outside Air:	0-100% Economizer with Drybulb Control
Altitude:	0 ft
Approval	cETLus

Physical

Dimensions and Weight			
Length	Height*	Width	Weight*
111.0 in	56.8 in	96.5 in	2396 lb

Corner Weights			
L1	L2	L3	L4
417 lb	399 lb	772 lb	807 lb

Construction			
Exterior	Insulation and Liners	Air Opening Location	
		Return	Supply
Painted Galvanized Steel	1" Injected Foam, R-7, Galvanized Steel Liner	Bottom	Bottom

Electrical

Unit FLA	MCA	MROPD	SCCR
42.0 A	48.8 A	50 A	5 kAIC

Note: Use only copper supply wires with ampacity based on 75° C conductor rating. Connections to terminals must be made with copper lugs and copper wire.

Approved
City of Portland
Bureau of Development Services
Planner _____
Date 02-07-2024
*This approval applies only to the reviews requested and is subject to all conditions of approval. Additional zoning requirements may apply.

MECHANICAL

3 RTU - DUCTLESS MINI-SPLIT

DAIKIN

Submittal Data Sheet
2.0-Ton Wall Mounted Unit
FAQ24TAVJURZQ24TAVJUA

OUTDOOR UNIT DETAILS			
Power Supply (V/Hz/Ph):	208-230 / 60 / 1	Compressor Stage:	
Power Supply Connections:	L1, L2, Ground	Capacity Control Range (%):	14 - 100
Min. Circuit Amps MCA (A):	16.5	Airflow Rate (H) (CFM):	2862
Max Overcurrent Protection (MOP) (A):	20	Gas Pipe Connection (inch):	5/8
Max Starting Current MSC(A):		Liquid Pipe Connection (inch):	3/8
Rated Load Amps RLA(A):	15.3	Sound Pressure (H) (dBA):	58
Dimensions (HxWxD) (in):	39 x 37 x 12-5/8	Sound Power Level (dBA):	
Net Weight (lb):	172		

DIMENSIONAL DRAWING - OUTDOOR UNIT

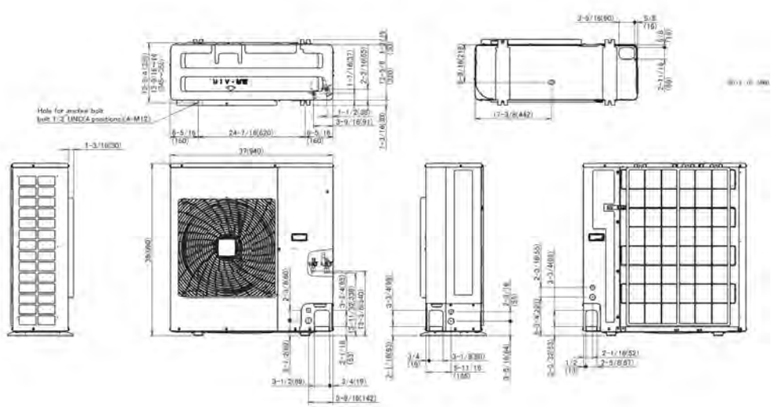
Hole for anchor bolt
both 1-3 (M8/24 positions) (4-M12)
1-3/16(30)
37(940)
24-7/16(620)
3-9/16(91)
8-5/16(160)
39(990)
3-1/2(89)
3-4(19)
3-9/16(142)
2-9/16(65)
3-1/2(89)
2-1/16(52)
2-5/8(67)
1/2(13)
1/4(6)
3-1/8(80)
6-11/16(170)
2-9/16(65)
2-3/8(60)
2-1/16(52)
2-5/8(67)
1/2(13)
2-9/16(65)
2-3/8(60)
2-9/16(65

MECHANICAL

5 RTU - LAUNDRY MAKE-UP AIR UNIT

GREENHECK
Building Value in Air.

Job Name: MSX-P112-H12-MF-1 Cut Sheet
Tag: MK-1
Quantity: 1
Printed Date: January 26, 2024

Dimensions and Weights		
Label	**Value**	**Description**
-	1811	Weight w/o accessories (lbs)
-	28.2	Supply Duct Width (in)
-	31	Supply Duct Height (in)
A	39	Overall Height (in)
B	34	Overall Width (in)
C	185	Overall Length (in)
D	30	Condensing Section (in)
W	36	Outdoor Air Intake (in)
X	36	Non-Access Side (in)
Y	36	Control Center Access (in)
Z	33	Access Side (in)

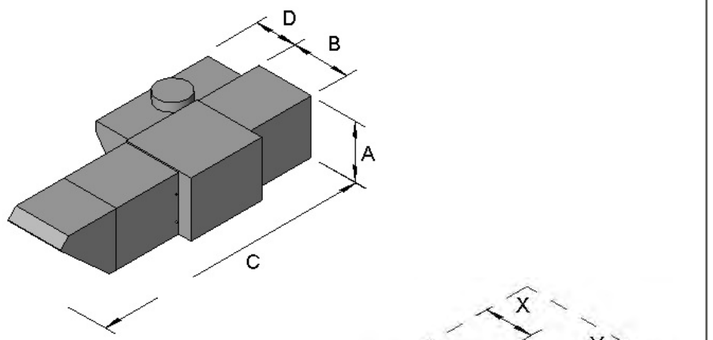

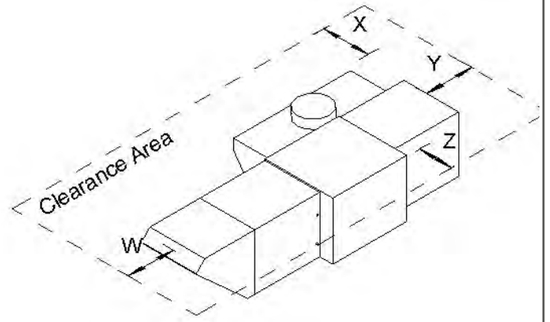

Page 3 of 3 Version 3.6.0, September 2023

Approved
City of Portland
Bureau of Development Services
Planner
Date 02-07-2024
* This approval applies only to the reviews requested and is subject to all conditions of approval. Additional zoning requirements may apply.

	A	B	C	D	E	F
1	ENDORSEMENT	INFO1	INFO2	NAME	ADDRESS/IO ADDRESS	CITYSTATEZIP/ADDRESSEE
2	RETURN SERVICE REQUESTED		1N1E22AA 17000	GATES CATON	5005 NE CLEVELAND AVE	PORTLAND OR 97211
3	RETURN SERVICE REQUESTED		1N1E22AA 17100	HAYASHI REIKA & JENNINGS PATRICK	3524 NW THURMAN ST	PORTLAND OR 97210
4	RETURN SERVICE REQUESTED		1N1E22AA 17102	5000 WILLIAMS LLC	43 BECKET ST	LAKE OSWEGO OR 97035
5	RETURN SERVICE REQUESTED		1N1E22AA 17104	CRAIG CAROLE J & CRAIG PAMELA J	21 NE ALBERTA ST	PORTLAND OR 97211
6	RETURN SERVICE REQUESTED	1N1E22AB 10200	OREGON STATE OF	DEPT OF ADMIN SERVICES	1225 FERRY ST	SALEM OR 97310
7	RETURN SERVICE REQUESTED		1N1E22AB 10200	VOLUNTEERS OF AMERICA	3910 SE STARK ST	PORTLAND OR 97214-2278
8	RETURN SERVICE REQUESTED		1N1E22AB 9900	OREGON STATE DEPT OF HUMAN SERVICES	30 N WEBSTER ST	PORTLAND OR 97217
9	RETURN SERVICE REQUESTED		1N1E22AB 9900	ALBINA HUMAN RESOURCES CENTER	30 N WEBSTER ST	PORTLAND OR 97217
10	RETURN SERVICE REQUESTED		1N1E22AB 9900	EASTER SEALS OREGON ATTN CFO	7300 SW HUNZIKER ST #103	PORTLAND OR 97223
11	RETURN SERVICE REQUESTED		1N1E22AC 1000	NW CONSERVATIVE BAPTIST ASSN INC	4822 N VANCOUVER AVE	PORTLAND OR 97217
12	RETURN SERVICE REQUESTED		1N1E22AC 1300	DARNELL JACKIE STRONG TR	12165 NW BIG FIR CT	PORTLAND OR 97229
13	RETURN SERVICE REQUESTED		1N1E22AC 1400	NORTH VANCOUVER HOSPITALITY LLC	2008 SE 11TH AVE	PORTLAND OR 97214
14	RETURN SERVICE REQUESTED		1N1E22AC 1500	MC CABE DOUGLAS W	PO BOX 14593	SCOTTSDALE AZ 85267
15	RETURN SERVICE REQUESTED		1N1E22AC 1600	SOURCING VITALITY INC	4922 N VANCOUVER AVE	PORTLAND OR 97217
16	RETURN SERVICE REQUESTED		1N1E22AC 1600	VITALITY CONCEPTS LLC	4922 N VANCOUVER AVE	PORTLAND OR 97217
17	RETURN SERVICE REQUESTED		1N1E22AC 1700	CEASER WILLIAM & CEASER BETTY M	4910 N VANCOUVER AVE	PORTLAND OR 97217-2826
18	RETURN SERVICE REQUESTED		1N1E22AC 1800	WISE AUBURN & WISE KAYDENCE	4850 N VANCOUVER AVE	PORTLAND OR 97217
19	RETURN SERVICE REQUESTED	1N1E22AC 400	POOL JOHN W &	RODNEY V MEYERS REV LIV TR	3113 NE 140TH AVE	PORTLAND OR 97230-2904
20	RETURN SERVICE REQUESTED		1N1E22AC 500	MARK RYAN & PESNER KATELYN	4845 N WILLIAMS AVE	PORTLAND OR 97217
21	RETURN SERVICE REQUESTED		1N1E22AC 600	CELESSIE MAE MYERS REV TR	4835 N WILLIAMS AVE	PORTLAND OR 97217
22	RETURN SERVICE REQUESTED		1N1E22AC 700	KASSA WOLDAY & NEGASH BETH	23 N WYGANT ST	PORTLAND OR 97217
23	RETURN SERVICE REQUESTED	1N1E22AD 8000	PORTLAND COMMUNITY REINVESTMENT	INITIATIVES INC	6329 NE M L KING BLVD	PORTLAND OR 97211-3029
24	RETURN SERVICE REQUESTED		1N1E22AD 8200	LARSSON NIEUWENHUIZEN FAM TR	2803 SE TAYLOR ST	PORTLAND OR 97214
25	RETURN SERVICE REQUESTED		1N1E22AD 8301	METSCHER MARY C	4914 N WILLIAMS AVE	PORTLAND OR 97217
26	RETURN SERVICE REQUESTED		1N1E22AD 8302	BENZ CHRISTOPHER	4910 N WILLIAMS AVE	PORTLAND OR 97217
27	RETURN SERVICE REQUESTED		1N1E22AD 8400	CONTRERAS FERNANDO	4924 N WILLIAMS AVE	PORTLAND OR 97217
28	RETURN SERVICE REQUESTED		1N1E22AD 8500	ALUMU TAMARAT K	3508 N WILLIAMS AVE	PORTLAND OR 97227-1438
29	RETURN SERVICE REQUESTED	1N1E22AD 8600	THE MALLORY BARROW FAMILY TR	C/O BRENDA MALLORY & BRUCE BARROW	2136 NE 10TH AVE	PORTLAND OR 97212
30				CURRENT RESIDENT	122 N ALBERTA ST	PORTLAND OR 97217
31				CURRENT RESIDENT	180 N ALBERTA ST	PORTLAND OR 97217
32				CURRENT RESIDENT	23 N WYGANT ST #C	PORTLAND OR 97217
33				CURRENT RESIDENT	4934 N VANCOUVER AVE	PORTLAND OR 97217
34				CURRENT RESIDENT	5000 N WILLIAMS AVE	PORTLAND OR 97217
35				CURRENT RESIDENT	106 N ALBERTA ST	PORTLAND OR 97217
36				CURRENT RESIDENT	30 N WEBSTER ST #D	PORTLAND OR 97217
37				CURRENT RESIDENT	4944 N WILLIAMS AVE	PORTLAND OR 97217
38				CURRENT RESIDENT	11 NE ALBERTA ST	PORTLAND OR 97211
39				CURRENT RESIDENT	23 N WYGANT ST #A	PORTLAND OR 97217
40				CURRENT RESIDENT	4838 N WILLIAMS AVE	PORTLAND OR 97217
41				CURRENT RESIDENT	4980 N VANCOUVER AVE	PORTLAND OR 97217
42				CURRENT RESIDENT	114 N ALBERTA ST	PORTLAND OR 97217
43				CURRENT RESIDENT	20 N ALBERTA ST	PORTLAND OR 97217
44				CURRENT RESIDENT	23 N WYGANT ST #B	PORTLAND OR 97217
45				CURRENT RESIDENT	30 N WEBSTER ST #A	PORTLAND OR 97217
46				CURRENT RESIDENT	30 N WEBSTER ST #E	PORTLAND OR 97217
47				CURRENT RESIDENT	4840 N WILLIAMS AVE	PORTLAND OR 97217
48				CURRENT RESIDENT	4904 N WILLIAMS AVE	PORTLAND OR 97217
49				CURRENT RESIDENT	4907 N WILLIAMS AVE	PORTLAND OR 97217
50				CURRENT RESIDENT	4911 N WILLIAMS AVE	PORTLAND OR 97217
51				CURRENT RESIDENT	5018 N WILLIAMS AVE	PORTLAND OR 97217
52	RETURN SERVICE REQUESTED	OWNER/PARTY OF INTEREST	PORTLAND CITY OF - PHB	PIPER KATE	1900 SW 4TH AVE #7007	PORTLAND OR 97201
53	RETURN SERVICE REQUESTED	APPLICANT	HOLST ARCHITECTURE	POLAND COLE	123 NE 3RD AVE #310	PORTLAND OR 97232
54	RETURN SERVICE REQUESTED	PARTY OF INTEREST	COMMUNITY DEVELOPMENT PARTNERS	LEE JAMES	126 NE ALBERTA ST #202	PORTLAND OR 97211
55	RETURN SERVICE REQUESTED		LAND USE CONTACT	NE COALITION OF NEIGHBORHOODS	4815 NE 7TH AVE	PORTLAND OR 97211
56	RETURN SERVICE REQUESTED		LAND USE CONTACT	SOUL DISTRICT BUSINESS ASSOCIATION	PO BOX 11565	PORTLAND OR 97211
57	RETURN SERVICE REQUESTED		LAND USE CONTACT	WILLIAMS VANCOUVER BUSINESS ASSOC	3355 N WILLIAMS AVE	PORTLAND OR 97227
58	RETURN SERVICE REQUESTED		HUMBOLDT NEIGHBORHOOD ASSOCIATION	ANDERSON PEACH C/O NECN	4815 NE 7TH AVE	PORTLAND OR 97211
59	RETURN SERVICE REQUESTED		LAND USE CONTACT	STATE HISTORIC PRESERVATION OFFICE	725 SUMMER NE #C	SALEM OR 97301
60	RETURN SERVICE REQUESTED		LAND USE CONTACT	AIA URBAN DESIGN COMMITTEE	422 NW 13TH AVE	PORTLAND OR 97209
61	RETURN SERVICE REQUESTED			DOUG KLOTZ	1908 SE 35TH PLACE	PORTLAND OR 97214
62	RETURN SERVICE REQUESTED		PORTLAND METRO REGIONAL SOLUTIONS	C/O DLCD REGIONAL REPRESENTATIVE	1600 SW FOURTH AVE #109	PORTLAND OR 97201
63	RETURN SERVICE REQUESTED		LAND USE CONTACT	PORT OF PORTLAND PLANNING	PO BOX 3529	PORTLAND OR 97208
64	RETURN SERVICE REQUESTED		LAND USE CONTACT	TRANSIT DEVELOPMENT	1800 SW FIRST AVE #300	PORTLAND OR 97201
65				LAND USE CONTACT	PROSPER PORTLAND	129/PROSPER
66					DAWN KRANTZ	B299/R5000

City of Portland, Oregon
Bureau of Development Services
Land Use Services
FROM CONCEPT TO CONSTRUCTION

Carmen Rubio, Commissioner
Rebecca Esau, Director
Phone: (503) 823-7300
TTY: 711
www.portland.gov/bds

Date: 12/6/23

To: Interested Person

From: Staci Monroe, Land Use Services
503-865-6516/staci.monroe@portlandoregon.gov

NOTICE OF A TYPE II PROPOSAL IN YOUR NEIGHBORHOOD

Development has been proposed in your neighborhood. The proposed development requires a land use review. The development proposal, review process, and information on how to respond to this notice are described below. A copy of the site plan and zoning map is attached. I am the staff person handling the case. Please call me if you have questions regarding this proposal. Please contact the applicant if you have questions regarding any future development on the site.

Public comments must be received within 21 days of the mail date of this notice. If you would like to submit written comments, they must be received by 5 p.m. on 12/27/23 Your comments must be emailed to the assigned planner listed above; please include the Case File Number, LU 23-103655 DZ, in your email. If you do not have access to email, please telephone the planner listed above about submitting comments. Please note that all correspondence received will become part of the public record.

CASE FILE NUMBER: LU 23-103655 DZ

NEW 4-STORY BUILDING

Applicant: Cole Poland | Holst Architecture
123 NE 3rd Ave., Ste 310 | Portland, OR 97232
cpoland@holstarc.com | 503-233-9856

Owner/
Party of Interest: Kate Piper | City of Portland | Portland Housing Bureau
1900 SW 4th Ave Ste 7007 | Portland, OR 97201

Party of Interest: James Lee | Community Development Partners
126 NE Alberta Street, Suite 202 | Portland, OR 97211

Site Address: 4947 N WILLIAMS AVE

Legal Description: BLOCK 1 LOT 1, WILLIAMS AVE ADD 2; BLOCK 1 LOT 3 S 74.35' OF LOT 20, WILLIAMS AVE ADD 2; BLOCK 1 LOT 18, WILLIAMS AVE ADD 2; BLOCK 1 LOT 19, WILLIAMS AVE ADD 2; BLOCK 1 N 110.65' OF LOT 20, WILLIAMS AVE ADD 2; CANCEL ACCOUNT, WILLIAMS AVE ADD 2; CANCEL ACCOUNT, WILLIAMS AVE ADD 2; BLOCK 1 LOT 2, WILLIAMS AVE ADD 2

Tax Account No.: R916500010, R916500050, R916500450, R916500480, R916500510, R916500451, R916500481, R916500030

State ID No.: 1N1E22AC 00100, 1N1E22AC 00300, 1N1E22AC 01200, 1N1E22AC 01100, 1N1E22AC 00200, 1N1E22AC 00101

Quarter Section: 2530

Neighborhood: Humboldt, contact at humboldtneighborhood@gmail.com
Business District: Williams Vancouver Bus. Assoc., contact at info@williamsdistrict.com & Soul District Business Association, contact at info@nnebaportland.org
District Coalition: Northeast Coalition of Neighborhoods, contact at info@necoalition.org

Plan District: NONE
Other Designations: NONE
Zoning: CM2 (MU-U)d – Commercial Mixed Use 2 zone with a Design Overlay
Case Type: DZ – Design Review
Procedure: Type II, an administrative decision with appeal to the Design Commission.

Proposal:
The applicant requests Design Review approval for a 4-story building on the property at the southwest corner of the intersection of N Williams and NE Alberta. The building program consists of 75 units of affordable housing including one-bedroom, two-bedroom, and three-bedroom units. Ground floor use consists of a mixture of housing units, building lobby, property management offices, and community amenity spaces. The site consists of a courtyard amenity and 31 surface parking spaces accessed off NE Alberta west of the building. Exterior building materials consist of fiber cement panel and lap siding with accents of cedar siding (tongue and groove) and stucco. Areas for wall murals are identified on the northwest and southeast corners of the building.

Design Review is required for new development in the Design Overlay Zone that does not utilize the Design Standards in Section 33.420.050.

Relevant Approval Criteria:
In order to be approved, this proposal must comply with the approval criteria of Title 33, Portland Zoning Code. The relevant criteria are:

- Portland Citywide Design Guidelines

The Portland Zoning Code is available online at https://www.portland.gov/code/33.

Zoning Code Section 33.700.080 states that land use review applications are reviewed under the regulations in effect at the time the application was submitted, provided that the application is complete at the time of submittal, or complete within 180 days. This application was submitted on November 16, 2023 and determined to be complete on 11/30/23.

DECISION MAKING PROCESS
The Bureau of Development Services will make a decision on this proposal.
After we consider your comments, we will do one of the following:
- Approve the proposal;
- Approve the proposal with conditions; or
- Deny the proposal.

The neighborhood association listed on the first page of this notice may take a position on this application. They may also schedule an open meeting prior to making their recommendation to the Bureau of Development Services. Please contact the person listed as the neighborhood contact to determine the time and date of this meeting.

ORS 227.178 states the City must issue a final decision on land use review applications within 120 days of the application being deemed complete. The 120-day review period may be extended at the request of the applicant.

If you are interested in viewing information in this file, please contact the planner listed on the front of this notice. The planner can email you documents from the file. A fee would be required for all requests for paper copies of file documents.

APPEAL PROCESS
If you disagree with the Bureau of Development Services administrative decision, you can appeal the decision to the Design Commission. This review body will hold a public hearing for the appeal. When the decision is mailed, the criteria used to make the decision and information on how to file an appeal will be included. If you do not send any comments, you can still appeal the decision. There is a 14-day deadline to file an appeal beginning on the day the decision is mailed. The reason for the appeal must be specifically defined in order for the review body to respond to the appeal. If an appeal is filed, you will be notified of the time and location of the appeal hearing.

There is a fee charged for appeals. Recognized neighborhood associations may qualify for an appeal fee waiver.

APPEAL OF THE FINAL CITY DECISION
After an appeal hearing, the review body decision may be appealed to the Oregon Land Use Board of Appeals (LUBA) at 775 Summer St NE, Suite 330, Salem, Oregon 97301-1283. The phone number for LUBA is 1-503-373-1265. Issues that may provide the basis for an appeal to LUBA must be raised prior to the comment deadline or prior to the conclusion of the hearing if a local appeal is requested. If you do not raise an issue with enough specificity to give the Bureau of Development Services an opportunity to respond to it, that may also preclude an appeal to LUBA on that issue.

The Bureau of Development Services is committed to providing equal access to information and hearings. Please notify us no less than five business days prior to the event if you need special accommodations. Call 503-823-7300 (TTY 503-823-6868).

Enclosures:
Zoning Map
Site Plan

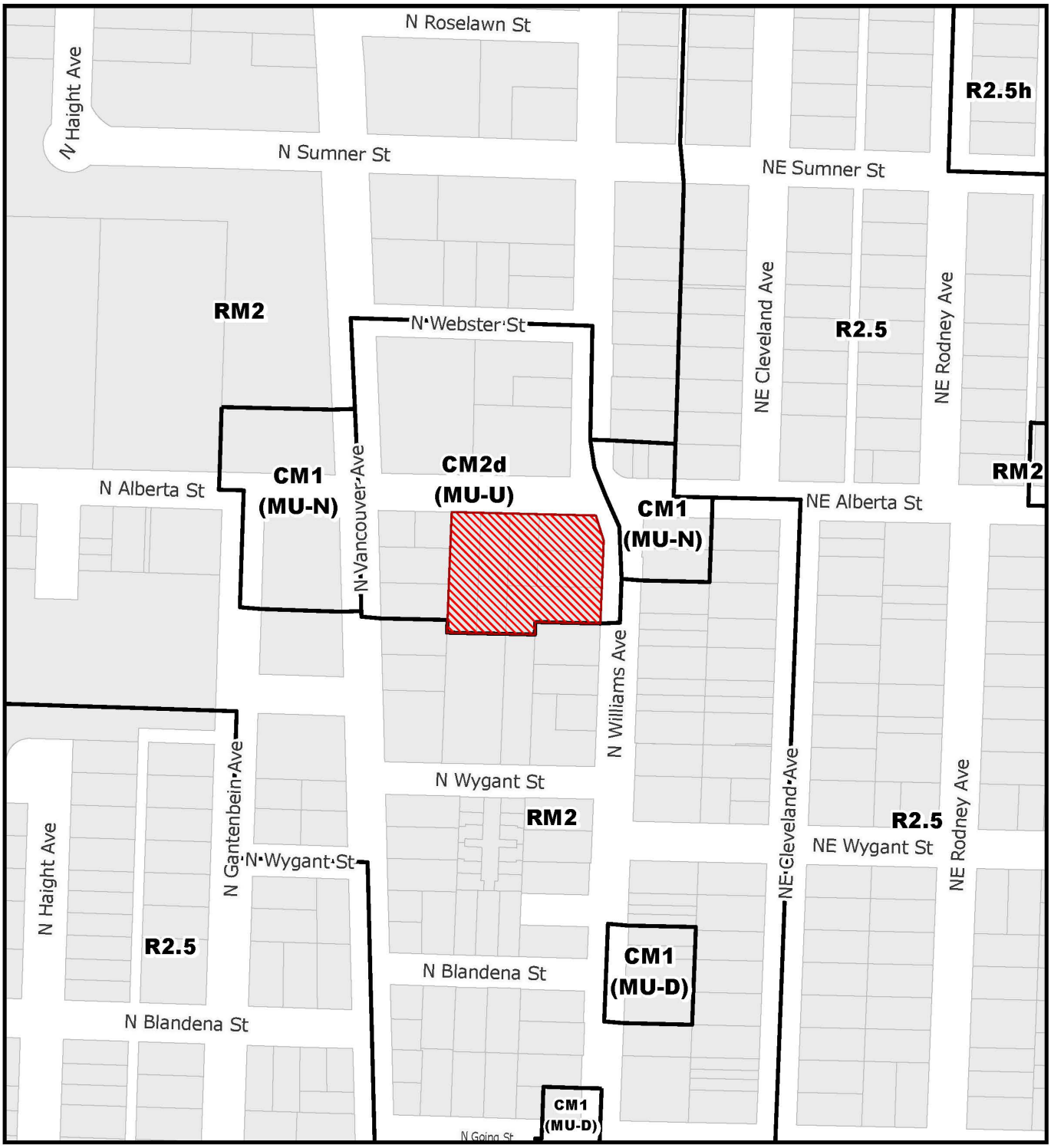

For Zoning Code in Effect Post October 1, 2022

ZONING

Site

File No. LU 23 - 103655 DZ
1/4 Section 2530
Scale 1 inch =200 feet
State ID 1N1E22AC 100
Exhibit B Nov 16, 2023

LU 23-103655 DZ
LU 23-103655 DZ
EXHIBIT D.2

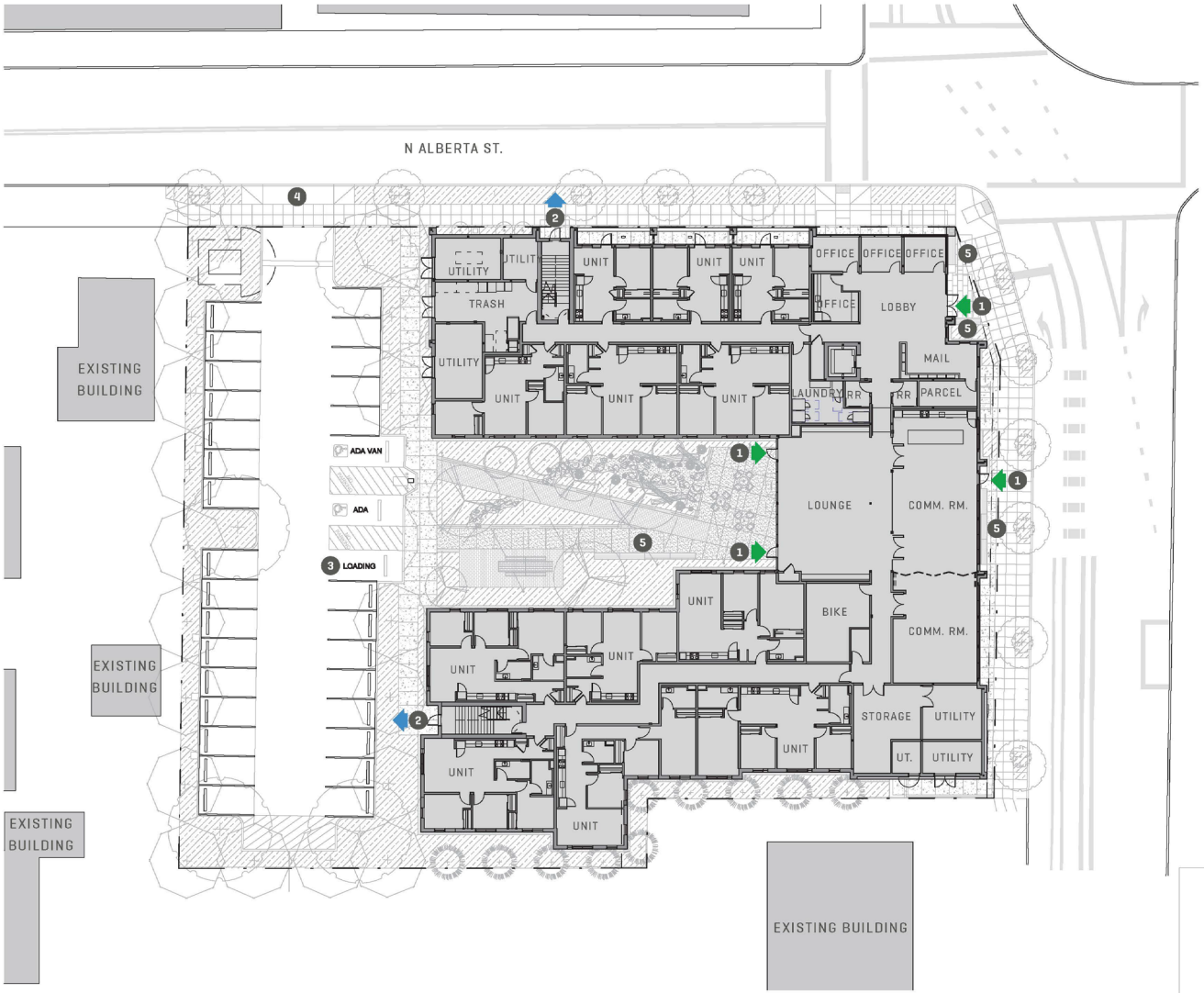

48' - 2", 4 STORY TYPE 5A CONSTRUCTION

SITE AREA: 41,210 SF

BUILDING FOOTPRINT: 20,920 SF

- PROJECT PROPERTY LINE
1. BUILDING ENTRY
2. EXIT
3. LOADING
4. NEW CURB CUT, REF CIVIL
5. BENCH

SCALE: 1" = 30' - 0"

0' 15' 30' 60'

N

HOLST

© 2023 HOLST ARCHITECTURE INC

STRONG PROPERTY
4931-4947 N WILLIAMS AVE
PORTLAND, OR 97217

DESIGN REVIEW
11.15.2023

title : SITE PLAN

LU NO.

sheet : C.4

Land Use Response

Date: January 2, 2024

To: Staci Monroe, BDS Land Use Services
503-865-6516, staci.monroe@portlandoregon.gov

From: Ella Ruth, BES Systems Development
503-823-8068, Ella.Ruth@portlandoregon.gov

Case File: LU 23-103655

Location: 4947 N WILLIAMS AVE

R#: R308855, R308856, R308871, R308872, R308873, R308855, R347630, R347631, R639049

Proposal: The applicant requests Design Review approval for a 4-story building on the property at the southwest corner of the intersection of N Williams and NE Alberta. The building program consists of 75 units of affordable housing including one-bedroom, two-bedroom, and three-bedroom units. Ground floor use consists of a mixture of housing units, building lobby, property management offices, and community amenity spaces. The site consists of a courtyard amenity and 31 surface parking spaces accessed off NE Alberta west of the building. Exterior building materials consist of fiber cement panel and lap siding with accents of cedar siding (tongue and groove) and stucco. Areas for wall murals are identified on the northwest and southeast corners of the building. Design Review is required for new development in the Design Overlay Zone that does not utilize the Design Standards in Section 33.420.050.

The following comments are based on the land use review plans and documents provided to the Bureau of Environmental Services (BES). Some references to Portland City Code (PCC) are included below; the applicant may also refer to the Auditor's Office Online Charter and Code page.

A. Response Summary

The project site is known to have contaminated soil. BES has not received written approval from DEQ stating onsite infiltration is acceptable. The applicant should be aware that the presence of contamination on site relative to the placement of stormwater management facilities could impact the design and layout of the site. Although there are no BES-specific approval criteria for the design review, BES recommends the applicant submits a plan that shows an alternative approvable stormwater system should the proposed infiltration be prohibited.

B. Sanitary Service

For BES to recommend approval of the design review application, the applicant must demonstrate that the proposed project will accommodate sanitary disposal facilities that are approvable under PCC 17.32. The comments below relate to this requirement.

1. *Existing Sanitary Infrastructure*: According to available GIS data, the following sewer infrastructure is located in the vicinity of the project site:
    a. Public 12-inch PVC combined sewer in N Alberta St (BES as-built # E10698).
    b. Public 10-inch VSP combined sewer in N Williams Ave (BES as-built # 20752).
2. *Service Availability*: Sanitary connections from private property that are to be permitted according to PCC 17.32.090 must be separately conveyed to the property line and connected through individual laterals to a City sanitary or combined sewer. All discharge must be connected via a route of service approved by the BES Chief Engineer.
    a. *Proposed Development*: The proposed development will be served by a connections to the sewer within its frontage.

3. *Connection Requirements*: Connections to the City sewer system must meet the standards of the City of Portland's Sewer and Drainage Facilities Design Manual, PCC 17.32.090, administrative rules ENB-4.07 and ENB-4.17, and all other relevant City codes and rules. Sanitary sewage from private property must be separately conveyed to the property line and connected through individual laterals for discharge to the City separate sanitary or combined sewer. Per ENB-4.07, sewer connection permits are required to make new connections to City mains and laterals, relocate or upsize existing laterals, and repair sewers in City right-of-way. The permittee is responsible for verifying the location, depth and size of an existing sewer lateral and for ensuring the lateral is clear of obstructions prior to connection.

BES does not have specific approval criteria related to design reviews. Staff has provided the above information in order to assist BDS Land Use Services with review of relevant approval criteria and to inform the applicant of sewer requirements that will apply to future development of the site.

C. STORMWATER MANAGEMENT

For BES to recommend approval of the design review application, the applicant must demonstrate that the proposed project will accommodate stormwater management facilities that are approvable under PCC 17.38. The comments below relate to this requirement.

1. *Existing Stormwater Infrastructure*: According to available GIS data, the following stormwater infrastructure is located in the vicinity of the project site:
    a. There are no public storm-only sewers available to this property.
    b. Public underground injection control (UIC) systems ("sumps") infiltrate stormwater runoff from the public right-of-way in the vicinity of the site. Stormwater from private development cannot be discharged to public UICs.
2. *General Stormwater Management Requirements*: Development and redevelopment sites that include any of the triggers listed in PCC 17.38.040 are subject to the policies and standards of PCC 17.38.035, Portland's Stormwater Management Manual (SWMM) and Source Control Manual (SCM). Projects must comply with the current adopted version of the SWMM as of the permit application date. A fundamental evaluation factor in the SWMM is the Stormwater Infiltration and Discharge Hierarchy (Section 1.3.3), which sets the framework that will be used to determine when a project's stormwater runoff must be infiltrated onsite and when offsite discharge will be permitted, and the parameters that must be met for either scenario. If tested infiltration rates on a property are greater than or equal to 2 inches per hour, onsite infiltration will be required unless the site qualifies for the ecoroof exception per Section 3.2.1 or infiltration is determined infeasible based on site conditions described in Chapter 2 of the SWMM. Note that maximum building coverage allowed by the zoning code, including below grade development, does not exempt the applicant from stormwater requirements. Pollution reduction and flow control requirements must be met using vegetated facilities to the maximum extent feasible, though roof runoff and some paved impervious surfaces are exempt when discharging directly to a UIC (refer to Sections 1.3.2, 1.3.4, 3.2.4 and 4.2.2 of the SWMM).
3. *Private Property Stormwater Management*: Stormwater runoff from this project must comply with all applicable standards of the SWMM and the SCM and be conveyed to a discharge point along a route of service approved by the BES Director or the Director's designee. Staff reviewed the submitted Performance Approach stormwater report from Vega Civil (November 2023) and geotechnical report from Carlson Geotechnical (August 2023). The submitted geotechnical report includes infiltration test results of 100 inches per hour and a design infiltration rate of 50 inches per hour on this site. The applicant proposes to infiltrate runoff from the development onsite via drywells that can meet minimum setbacks as established in the facility design standards and Table 2-1 of the SWMM. **Due to the contamination on this site, the applicant must submit written approval from the DEQ demonstrating that onsite infiltration is acceptable and will not result in adverse**

impacts in order to infiltrate stormwater as proposed. Please note that UICs must be rule authorized by DEQ's UIC Program. While BES has assessed onsite infiltration feasibility using UICs based on SWMM requirements, the information provided to BES may not be sufficient for UIC rule authorization or for DEQ requirements related to site contamination. As such, it is still unclear whether the requirements of the SCM can be met with the proposed onsite infiltration. It is highly recommended that the applicant receive approval from DEQ's UIC Program to infiltrate on this site using UICs prior to the land use review approval. Alternatively, the applicant could propose an alternative plan should onsite infiltration be prohibited.

4. *Public Right-of-Way Stormwater Management*: Stormwater runoff from public right-of-way improvements as required by the City of Portland Bureau of Transportation (PBOT) must be managed according to the standards of the SWMM and the Sewer and Drainage Facilities Design Manual. There are no public right-of-way improvements that will trigger BES public stormwater drainage improvements.

BES does not have specific approval criteria related to design reviews. Staff has provided the above information in order to assist BDS Land Use Services with review of relevant approval criteria and to inform the applicant of stormwater management requirements that will apply to future development of the site.

D. CONDITIONS OF APPROVAL

BES has no recommended conditions of approval.

E. PERMIT INFORMATION

At the time of permit review the applicant should be aware of the following:

1. *Connection Fees*: Sewer system development charges and connection fees are assessed at the time of building plan review and change every fiscal year on July 1st. For additional information on these fees use the BDS Online Fee Estimator or call the BES Development Review Team at 503-823-7761, option 2.
2. *Building Plans*: Building plans for this project must include a detailed site utility plan which shows proposed and existing sanitary connections, as well as stormwater management that meets the requirements of the version of the SWMM that is in effect at the time permit applications are submitted.
3. *Source Control Requirements*: Source control requirements from the Source Control Manual (SCM), Portland City Code (PCC) Title 17, and BES Administrative Rules that may be applicable to this project are listed below with the corresponding chapter, section, code, and/or rule. For specific questions on the following, please contact BES Source Control at 503-823-7122. BES recommends that requirements related to site contamination be addressed prior to building permit reviews to help avoid potentially long delays.
    a. *Site Use and Activity-Based Source Control Requirements (SCM Chapter 6):* BES recommends the applicant review the following SCM sections to understand the structural, treatment, and operational BMP requirements that may impact the project design.
        1) *Waste and Recycling Storage (SCM Section 6.1)*
    b. *Contaminated Site Requirements* (*SCM Chapter 8*): This property is a known contaminated site.
        1) *Contaminated Soils (SCM Section 8.2.1)*: Additional erosion control measures are required. Stockpiles of soil must have a barrier on all four sides and be covered to protect the soils from stormwater contact. Contaminated soil piles must also have an impervious layer underneath the stockpile to inhibit contaminants from leaching back into the soil. A DEQ approved Contaminated Media Management Plan

(CMMP) or Soil Management Plan (SMP) may also be required prior to building permit approval.

c. *Site Dewatering Requirements (SCM Chapter 9, PCC 17.34, PCC 17.36, PCC 17.38, PCC 17.39, ENB 4.32)* BES evaluates requests for temporary and long-term stormwater and groundwater dewatering discharges into the city sewer system for approval or denial. See Appendix 1 of the SCM for the Construction Dewatering Discharge Application Form. If approved, a Discharge Permit for the storm or combined sewer may be required.

   1) Fees are assessed for temporary construction discharges to the public sewer system – navigate HERE for current rates and information about dewatering as it relates to construction projects.

   2) Construction discharges to City UICs are prohibited.

   3) Construction discharges to private UICs (e.g., drywells or soakage trenches) must be authorized by DEQ's UIC Program.

   4) When dewatering is proposed on known contaminated site, BES may require analysis of the discharged stormwater or groundwater to determine the appropriate discharge system or if treatment may be needed prior to discharge.

G. ADMINISTRATIVE REVIEW

The applicant may request a modification of a decision presented in this response, as applicable, via an administrative review as outlined in PCC sections 17.06.050, 17.32.150, 17.33.100, 17.34.115, 17.36.110, 17.38.060 and 17.39.120 and in those sections' associated administrative rules. Some portions of this response are not decisions, but guidance related to requirements that this proposal may be subject to during City review of other processes, such as a building permit or public works permit review. While these are not decisions that are ripe to be considered through an administrative review, if the outcome of a future administrative review needs to be anticipated at this time in order to inform the land use action, the administrative review process may be utilized. Some items, such as technical standards, are not reviewable. For guidance on whether a modification can be requested and whether the land use process is the proper time to request it, consult with the BES staff identified above prior to submitting a request.

There is no fee charged for an administrative review, and all BES penalties and late fees will be stayed pending the outcome of the review process, as applicable. To request an administrative review, the applicant must complete the Administrative Review Request Form (located here: www.portlandoregon.gov/bes/68285) and submit it to the Systems Development staff listed above within 20 business days of the mailing date of this response. The applicant should coordinate with the BDS planner to determine whether applying for an administrative review would have an impact on state-mandated land use timelines.

RESPONSE TO THE BUREAU OF DEVELOPMENT SERVICES
LAND USE REVIEW REQUEST

LU: 23-103655-000-00-LU Date: December 27, 2023

To: Staci Monroe, Bureau of Development Services, B299/R5000

From: Tammy Boren-King, B106/800, 503-823-2948, tammy.boren-king@portlandoregon.gov

Applicant: Holst Architecture *Cole Poland*
HOLST ARCHITECTURE
123 NE 3RD AVE., STE 310
PORTLAND, OR 97232

Location: 4947 N WILLIAMS AVE

TYPE OF REQUEST: Type 2 procedure DZ - Design Review

DESCRIPTION OF PROJECT

The applicant requests Design Review approval for a 4-story building on the property at the southwest corner of the intersection of N Williams and NE Alberta. The building program consists of 75 units of affordable housing including one-bedroom, two-bedroom, and three-bedroom units. Ground floor use consists of a mixture of housing units, building lobby, property management offices, and community amenity spaces. The site consists of a courtyard amenity and 31 surface parking spaces accessed off NE Alberta west of the building. Exterior building materials consist of fiber cement panel and lap siding with accents of cedar siding (tongue and groove) and stucco. Areas for wall murals are identified on the northwest and southeast corners of the building. Design Review is required for new development in the Design Overlay Zone that does not utilize the Design Standards in Section 33.420.050.

RESPONSE

Portland Transportation/Development Review has reviewed the application for its potential impacts regarding the public right-of-way, traffic impacts and conformance with adopted policies, street designations, Title 33, Title 17, and for potential impacts upon transportation services.

Design Review Approval Criteria – Design Guidelines

There are no transportation-related approval criteria associated with the proposed Design Guidelines. There are other requirements of City codes and administrative rules which can affect a project's ability to meet the Design Guidelines which do need to be addressed. Dedication to provide a standard sidewalk corridor is required along N Williams Ave. but not on N Alberta St. Based on surveyed plans submitted for a pre-concept review to public works permit TH1348, 2-feet of dedication is required. The design review plans do not call out the dedication or provide dimensions for the lot. Based on comparing the design shown on the design review exhibits to the design in the public works plans, it is likely the applicant has accounted for the dedication. PBOT staff recommend a site plan specifically showing the dedication be submitted prior to approval of the land use review.

All of the ground floor door swings are accommodated on private property.

There is a canopy encroachment shown on the N Alberta St. frontage. While a ground floor canopy is shown in the elevation drawings for the N Williams Ave. side of the building, it is not clear if this is an encroachment or if it is accommodated on private property. Height dimensions were not provided, though the canopies scale to being approximately 10-feet above grade on the elevation drawings on sheet C.8. Canopy or awning encroachments are allowed by TRN 8.08-Enroachments as long as they are more than 8-ft above grade and do not extend more than two-thirds of the distance between the property line and the curb. The encroachment policy appears to have been considered in the design, though staff does not have sufficient information to verify the policy is met. Staff recommends dimensioned drawings be submitted documenting compliance with the encroachment policy.

There do not appear to be upper story encroachments such as balconies or window projections.

The transformer is shown in private property.

A single driveway is proposed onto the lower classified street more than 25-ft from the intersection. It scales to 20-ft wide, which is the minimum driveway width. The public works permit plans show the driveway as 20.5-ft wide. A surface loading space is clearly labeled on the site plan and scales to 9-ft wide and 21-feet long. This meets the requirement to provide a Standard B Loading space in 33.266.310.C and D.

Required Public Improvements, Dedication, and Driveways

TSP Classifications: At this location, the City's Transportation System Plan (TSP) classifies the abutting rights-of-way as follows:

The site is not within a Pedestrian District

Street Name	Pedestrian	Bicycle	Transit	Freight	Traffic	Design
N Alberta St	City Walkway	City Bikeway	Transit Access Street	Local Service Truck Street	Neighbor-hood Collector	Local Street
N Williams Ave	Major City Walkway	Major City Bikeway	Major Transit Priority	Local Service	Neighbor-hood Collector	Neighbor-hood Corridor

Street Name	ROW Width*	Roadway Width*/Condition	Pedestrian Corridor Width*/Configuration			
			Curb	Furnishing	Sidewalk	Frontage
N Alberta St	57.4 to 58.4 ft	Approx. 33 to 34-ft paved	0.5-ft 0.5-ft	3.5-ft 0-ft	6-ft 11.5-ft	2-ft 0-ft
N Williams Ave	Approx. 60 ft	36-ft paved	0.5-ft 0.5-ft	0-ft 2.5-ft	9.5-ft 6-ft	0-ft 1-ft

** The applicant is advised the information contained herein is derived from City GIS and other databases typically used by city staff, as well as information from the applicant. It has not been confirmed via a survey. It is the applicant's responsibility to provide a current survey to document the location of the abutting rights-of-way and to confirm or challenge any anticipated dedication amount.*

Standard ROW Improvements:

Street Name	Curb Location	Pedestrian Corridor Width	Pedestrian Corridor Configuration				Estimated Dedication
			Curb	Furnishing/ Stormwater	Sidewalk	Frontage	
N Alberta St	No change	11-ft	0.5-ft	4-ft (allocate excess ROW here)	6-ft	0.5-ft	None
N Williams Ave	No change	12-ft	0.5-ft	4-ft	6-ft	1.5-ft	2 ft

The estimated dedication amount is based on the information available to City Staff. A site-specific survey is necessary to determine the final dedication amount, which will be determined via the Public Works Permit process.

Furnishing zone treatments are set by Table B-4 of the Pedestrian Design Guide (2022) as which recommends the following.

- N Alberta St: Continuous planting strip in the furnishing zone for the site's frontages, although hardscape with tree wells is allowed.
- N Williams Ave: Hardscape with tree wells.

Design District/Streetscape Plan Information: Not applicable

ADA Compliant Corner or Mid-Block Ramps: The Americans with Disabilities Act (ADA) requires projects which construct a new pedestrian facility (e.g., a new sidewalk or ped-push button), resurface a portion of the street, or otherwise alter the street to provide ADA compliant curb ramps along the route as part of the project. The site's N Alberta St and NW Williams Ave intersection corner/street crossings, including both ADA curb-ramps, is required to be reconstructed to meet current City and Federal ADA standards. Information regarding ADA curb ramp design and construction criteria can be found at https://www.portlandoregon.gov/transportation/article/727351. A public works permit will be triggered.

Dedication, concept approval of a public works permit and a performance guarantee (such as a bond) will be required prior to PBOT approval of the building permit.

RECOMMENDATION

PBOT recommends the applicant submit plans specifically documenting compliance with the following:

- a site plan specifically showing the area to be dedicated to verify that dedication has been accounted for in the design. Based on the public works plans submitted to TH1348, the dedication is 2-ft on N. Williams Ave and no dedication on NE Alberta St.
- a ground floor plan that specifically shows the extent of any proposed encroachments with a dimension for the distance from the property line to the edge of the encroachment.
- drawings specifically showing the height of the proposed encroachment(s) above grade.

To: Staci Monroe
From: Ayush Vaidya, Life Safety Plans Examiner
Date: December 7, 2023
RE: 4947 N WILLIAMS AVE, 23-103655-LU

LIFE SAFETY PLAN REVIEW RESPONSE
The following comments are based on the plans and documents provided to the Life Safety Plan reviewer. They are intended to provide the applicant with preliminary Building Code information that could affect the Land Use Review, Public Records request and/or future Building Permit reviews. The comments may not identify all conflicts between the Land Use proposal and the Building Codes. A complete Life Safety plan review will be provided at the time of Building Permit submittal at which time any additional Building Code issues will be noted. The comments are based on the Oregon Structural Specialty Code (OSSC), the International Existing Building Code (IEBC), the Oregon Mechanical Specialty Code (OMSC), or the Oregon Residential Specialty Code (ORSC).

RESPONSE SUMMARY

☒ Life Safety Plan Review does not object to the approval of this proposal. The applicant should be aware that several building code requirements may impact the final design of this building. For information regarding future compliance, see the **GENERAL LIFE SAFETY COMMENTS** below.

☐ Life Safety Plan Review does not object to the approval of this proposal. This approval is conditional on the finalization of the property line adjustment approved through this LUR/PR. If this public record is not finalized, a Covenant Not to Sell the Properties Separately must be established for this project. For information regarding future compliance, see the **GENERAL LIFE SAFETY COMMENTS** below.

☐ Life Safety Plan Review does not object to the approval of this proposal. Prior to Life Safety approval of the final plat or Land Use proposal, the applicant must address the Building Code issues listed as part of the **GENERAL LIFE SAFETY COMMENTS** below.

☐ Life Safety Plan Review cannot support approval of the current Land Use proposal. Prior to Life Safety approval of the final plat, the applicant must address the Building Code issues listed as part of **the GENERAL LIFE SAFETY COMMENTS** below.

Item #	GENERAL LIFE SAFETY COMMENTS
1	**Building Permit Required -** A separate Building Permit is required for the work proposed and the proposal must be designed to meet all applicable building codes and ordinances. Information about submitting a permit application request is available online at https://www.portland.gov/bds/permit-review-process/apply-or-pay-permits.
2	**Fire Rated Exterior Walls -** Most occupancy groups and construction types require exterior walls less than 30 feet to a property line to have 1-hour fire-rated construction. Please verify required wall rating based on Table 602. • Exterior walls located less than or equal to 10 feet to a property line must be 1-hour fire-rated for exposure to fire from both sides. • Exterior walls located more than 10 feet to a property line must be 1-hour fire-rated for exposure to fire from the inside only. (OSSC 602.1, 705.5)

PORTLAND FIRE & RESCUE

Rene Gonzalez, Commissioner
Ryan Gillespie, Fire Chief
Kari Schimel, Fire Marshal
Prevention Division
1300 SE Gideon St.
Portland, OR, 97202
Phone: (503)823-3770

LAND USE REVIEW RESPONSE

TO: **Staci Monroe, City of Portland, Land Use Review**
FROM: **Dawn Krantz, Portland Fire Bureau 971-313-3675**
DATE: **December 5, 2023**
SUBJECT: **LU 23-103655 DZ**
SITE LOCATION : 4947 N WILLIAMS AVE

The following conditions of approval and informational comments are based on the land use review information provided to the Fire Bureau. Fire Bureau requirements are generated from the 2021 Portland Fire Code. All current Fire Code requirements apply and are required to be met. If these conditions cannot be met, an appeal providing an alternative method is an option for the applicant. If the applicant chooses to appeal a requirement, the appeal must be listed as a condition in the decision. Fire Code Appeals can be obtained at the Fire Bureau web page, www.portlandonline.com.

CONDITIONS OF APPROVAL AT TIME OF FINAL PLAT

A separate building permit is required for this proposal. All applicable Fire Code requirements shall apply at the time of permit review and development.

Urban Forestry
Land Use Review Response

Date: January 03, 2024
From: Dan Gleason
503-823-1691, Daniel.Gleason@portlandoregon.gov
Case File: 23-103655-000-00-LU
Location 4947 N WILLIAMS AVE
Proposal: The applicant requests Design Review approval for a 4-story building on the property at the southwest corner of the intersection of N Williams and NE Alberta. The building program consists of 75 units of affordable housing including one-bedroom, two-bedroom, and three-bedroom units. Ground floor use consists of a mixture of housing units, building lobby, property management offices, and community amenity spaces. The site consists of a courtyard amenity and 31 surface parking spaces accessed off NE Alberta west of the building. Exterior building materials consist of fiber cement panel and lap siding with accents of cedar siding (tongue and groove) and stucco. Areas for wall murals are identified on the northwest and southeast corners of the building.

Design Review is required for new development in the Design Overlay Zone that does not utilize the Design Standards in Section 33.420.050.

Urban Forestry has reviewed the proposal for its impact on existing city trees, street trees and heritage trees, street tree planting requirements and related mitigation in accordance with Title 11, Trees and for potential impacts upon urban tree canopy. It is the applicant's responsibility to disclose all aspects of their land use proposal that may impact required street tree plantings and existing street trees during the land use review process.

UNLESS EXPLICITLY STATED HEREIN, THIS REVIEW DOES NOT APPROVE STREET TREE REMOVALS AND DOES NOT PROVIDE ANY EXEMPTIONS TO TITLE 11 REQUIRMENTS.

Permits required after land use approval are subject to all applicable development standards and all provisions of the City Code, including Title 11. Title 11 regulations will be applied during the permit review process.

PLEASE NOTE THERE MAY BE OTHER APPLICABLE TREE REQUIREMENTS AS PER TITLE 33 PLANNING & ZONING.

A. Response Summary

Urban Forestry does not object to approval of the land use proposal. The proposed development will be subject to Title 11 regulations during the permit review process. Additional information is required prior to full building permit review.

A. Tree Plan (11.50.070)

A Title 11 compliant tree plan must be submitted with each phase of development review and permitting including land use reviews, building permits, and public works permits. The same tree plan shall be included with each permit.
A full tree plan was not submitted with the land use proposal, and additional tree information is required.

The following information is required for street trees, Heritage trees, and trees on city owned property and was not included with the proposal:

a. Existing improvements
a. Construction staging areas
b. Proposed alterations including structures, impervious areas, grading, and utilities
c. Proposed tree activity
    1. Indicate trees to be retained and proposed tree protection
    2. Indicate trees to be removed
    3. Show location, species, planting size and number of trees to be planted
d. Protection plan
    i. The protection plan must describe the potential impacts of construction methods, staging areas, equipment usage, loading areas, and building materials that will impact regulated trees. The plan must describe how the existing street, heritage, and city trees will have continued protection, in accordance with the protection requirements of 11.60, during the proposed development.

B. Street Trees

1. *Existing Street Conditions*

1. *Existing Street Conditions*
    a. N Williams Ave: The site has approximately 165 feet of street frontage. The right-of-way is improved with pavement, curbs and sidewalks. There are no overhead high voltage power lines. There are no street trees.
    b. N Alberta St: The site has approximately 220 feet of street frontage. The right-of-way is improved with pavement, curbs, planting strip, sidewalks. There are overhead high voltage power lines. There are 2 street trees.
        i. Mountain ash *(Sorbus aucuparia*) 10" DBH. Trees are dead.

2. *Street Tree Preservation* (11.50.040)
The 2 dead trees along N Alberta St will be approved for removal and shall be removed.
Due to the species and condition of trees removed, no trees are required to be planted to mitigate the loss as a result of this project.

3. *Street Tree Planting* (11.50.060.C)
The applicant has not provided a conceptual street tree planting plan. One street tree must be planted or retained for each full increment of 25 linear feet (11.50.060.C.1). Street trees must be planted at a minimum 2 caliper inches. Trees will be required to be planted through the Building Permit and the Public Works Permit.

Street tree planting may be exempt under 11.50.060.B when existing above or below grade utilities prevent planting street trees or when the existing planting strip is less than 3-feet wide.

Due to the existing condition of the right-of-way, street trees may not be required unless PBOT requires frontage improvements.

C. On Site Trees

City Managed Sites (11.50.040.C.2.a)

For development on City owned or managed sites applicants are required to consult with the City Forester at the preliminary project design phase if City or Street Tree removal is likely to occur to complete the project. The purpose of this consultation is to identify potential impacts and opportunities to retain existing trees, as well as any measures required to protect trees on site. (11.50.040)

The proposal has not yet been reviewed by Urban Forestry. If this will stay City Property when permits are submitted a PPDF (see below) will need to be submitted.

There is no record of Urban Forestry having been consulted in regard to this project. A Preliminary Project Design Form must be submitted with Urban Forestry. The Preliminary Design Form can be found here: https://www.portland.gov/trees/trees-development/documents/urban-forestry-preliminary-project-design-form

Existing On-Site Conditions

As noted in the arborist inventory,

The site is generally level in elevation with turf grass predominating. There are significant amounts of invasive ground cover (Himalayan blackberry, English ivy and Clematis vitalba). Large stems of Cherry laurel (Prunus laurocerasus) are growing around the existing structure and along the south fence line.

1. *On-Site Tree Preservation* (11.50.040)

   The applicant proposes to remove the following:
   There are 20 trees over six inches proposed for removal for the project as refenced in the arborist report. There are four non-exempt trees slated for removal for the project.

   These are a 17" English walnut, a 28", and 25" Western red cedars and a 11' Pacific dogwood.

   The proposed tree removal(s) may be permitted for removal during the appropriate development permit. These trees are current located on an fairly open lot with expected full root systems that would be greatly impacted by the hardscape and infrastructure needed for this housing project.

   On City-owned or managed sites, healthy, non-nuisance trees ≥ 6" DBH that are approved for removal shall be replanted in accordance with the Administrative Rule PRK-2.04 to mitigate the tree canopy loss as a result of the project. Mitigation for trees removed shall occur in the street planter strip, on site, or in the same watershed either by planting or by paying fees-in-lieu of planting for each tree not planted. Mitigation will be required through the appropriate development permit. Fees-in-lieu will be charged in accordance with the Title 11 Trees Fee Schedule.

   Based on this the project would require 16 new trees to be planted to mitigate the loss of the four trees removed. These would need to be added to the project or shown to be planted on a separate parcel within the City of Portland. **A fee of $10,800** (1.5 inch caliper x $450 per inch x 16) would be required to be paid into the City Tree Planting and Preservation Fund if these trees cannot be planted.

Tree Replacement for Development on City Owned or Managed Sites

Size of tree to be removed (inches in diameter)	No. of trees to be planted
6 and up to 12	up to 2
More than 12 and up to 20	up to 3
More than 20 and up to 25	up to 5
More than 25	up to 6

The land use proposal has not provided adequate information to determine if existing trees may be approved and permitted for removal as part of the proposed development during the permit review process. A full Tree Plan and assessment of preservation possibilities must be provided as part of the permit set.

All trees not approved for removal are required to be retained and protected during all stages of the development.

The project also identifies two exempt trees (#5 and #14) that are located outside of the project property but will likely be greatly impacted by the project. Prior to permit release the project must create a protection plan for these trees or coordinate with adjacent property owners to coordinate tree removal.

1. *On-Site Tree Protection Specifications* (11.60.030)
The applicant has not provided a tree protection plan. Tree protection is required for all trees required to be retained in accordance with Title 11 Trees, Protection Methods (11.60.030). Tree protection shall follow either the Prescriptive or Performance path. Protection methods must be shown on the tree plan. If using the Performance path, the alternate tree protection plan must be prepared by an arborist who has visited the site. The protection plan must describe the potential impacts of construction methods, staging areas, equipment usage, loading areas, and building materials that will impact regulated trees.

   The project also identifies two exempt trees (#5 and #14) that are located outside of the project property but will likely be greatly impacted by the project. Prior to permit release the project must create a protection plan for these trees or coordinate with adjacent property owners to coordinate tree removal.

2. *On-Site Tree Density Standards* (11.50.050.D)
The applicant has provided a tree planting plan. The required tree area is based on the size and the type of proposed existing development as shown in Title 11 Table 50-2. Trees must be planted at a minimum 1.5 caliper inches. Trees will be required to be planted through the permit review process.

   There will be required changes to the on-site tree planting plan required to ensure that density is met and that species approved by Urban Forestry are selected. Maples are currently not allowed to be used on City managed projects.

D. Heritage Trees

Heritage Trees (11.20.060):

There is not a tree located on/adjacent to/neighboring the site on the City of Portland's Heritage Tree list.

E. Recommendations

Urban Forestry has no objection to the proposed project with the following conditions:

- A full tree plan be provided that demonstrates intended removals, preservation options for non-exempt trees, protection plan for neighboring trees or permission from neighbor for tree removals.

Land Use Response Addendum

Date: February 7, 2024

To: Staci Monroe, BDS Land Use Services
503-865-6516, staci.monroe@portlandoregon.gov

From: Ella Ruth, BES System Development
503-823-8068, Ella.Ruth@portlandoregon.gov

Case File: LU 23-103655

Location: 4947 N WILLIAMS AVE

R#: R916500010, R916500050, R916500450, R916500480, R916500510, R916500010, R916500010, R916500451, R916500481, R916500030

Proposal: The applicant requests Design Review approval for a 4-story building on the property at the southwest corner of the intersection of N Williams and NE Alberta. The building program consists of 75 units of affordable housing including one-bedroom, two-bedroom, and three-bedroom units. Ground floor use consists of a mixture of housing units, building lobby, property management offices, and community amenity spaces. The site consists of a courtyard amenity and 31 surface parking spaces accessed off NE Alberta west of the building. Exterior building materials consist of fiber cement panel and lap siding with accents of cedar siding (tongue and groove) and stucco. Areas for wall murals are identified on the northwest and southeast corners of the building. Design Review is required for new development in the Design Overlay Zone that does not utilize the Design Standards in Section 33.420.050.

This memo is an addendum to the initial BES Land Use Response issued by Bureau of Environmental Services (BES) staff on 1/04/24, and is in response to the following new information that was received subsequent to those initial comments:

- Revised Stormwater Report (Vega Civil – 1/30/24)

A. COMMENTS

Based on this additional information, BES has determined that sufficient information has been provided to demonstrate a feasible stormwater management plan for this project.

1. Staff reviewed the submitted Performance Approach stormwater report from Vega Civil (November 2023) and geotechnical report from Carlson Geotechnical (August 2023). The submitted geotechnical report includes infiltration test results of 100 inches per hour and a design infiltration rate of 50 inches per hour on this site. The applicant proposes to infiltrate runoff from the development onsite via drywells that can meet minimum setbacks as established in the facility design standards and Table 2-1 of the SWMM. BES understands that this is the applicant's preferred method of stormwater management, however, due to the contamination on this site, the applicant must submit written approval from the DEQ demonstrating that onsite infiltration is acceptable and will not result in adverse impacts in order to infiltrate stormwater as proposed. BES understands the applicant is currently in communications with DEQ on this matter.
2. In the event that onsite infiltration is not allowed, the applicant has submitted an alternative stormwater report. Staff reviewed the revised Performance Approach stormwater report from Vega Civil (January 2024). As an alternative to onsite infiltration, the applicant proposes for runoff from the development to be discharged offsite to the combined sewer after pollution reduction standards are met with two flow-through planters sized per the Presumptive Approach.

B. Conditions of Approval

BES has no recommended conditions of approval.

C. Administrative Review

The applicant may request a modification of a decision presented in this response, as applicable, via an administrative review as outlined in PCC sections 17.06.050, 17.32.150, 17.33.100, 17.34.115, 17.36.110, 17.38.060 and 17.39.120 and in those sections' associated administrative rules. Some portions of this response are not decisions, but guidance related to requirements that this proposal may be subject to during City review of other processes, such as a building permit or public works permit review. While these are not decisions that are ripe to be considered through an administrative review, if the outcome of a future administrative review needs to be anticipated at this time in order to inform the land use action, the administrative review process may be utilized. Some items, such as technical standards, are not reviewable. For guidance on whether a modification can be requested and whether the land use process is the proper time to request it, consult with the BES staff identified above prior to submitting a request.

There is no fee charged for an administrative review, and all BES penalties and late fees will be stayed pending the outcome of the review process, as applicable. To request an administrative review, the applicant must complete the Administrative Review Request Form (located here: www.portlandoregon.gov/bes/68285) and submit it to the Systems Development staff listed above within 20 business days of the mailing date of this response. The applicant should coordinate with the BDS planner to determine whether applying for an administrative review would have an impact on state-mandated land use timelines.

Urban Forestry
Land Use Review Response

Date: February 07, 2024
From: Dan Gleason
503-823-1691, Daniel.Gleason@portlandoregon.gov
Case File: 23-103655-000-00-LU
Location 4947 N WILLIAMS AVE
Proposal: The applicant requests Design Review approval for a 4-story building on the property at the southwest corner of the intersection of N Williams and NE Alberta. The building program consists of 75 units of affordable housing including one-bedroom, two-bedroom, and three-bedroom units. Ground floor use consists of a mixture of housing units, building lobby, property management offices, and community amenity spaces. The site consists of a courtyard amenity and 31 surface parking spaces accessed off NE Alberta west of the building. Exterior building materials consist of fiber cement panel and lap siding with accents of cedar siding (tongue and groove) and stucco. Areas for wall murals are identified on the northwest and southeast corners of the building.

Design Review is required for new development in the Design Overlay Zone that does not utilize the Design Standards in Section 33.420.050.

Urban Forestry has reviewed the proposal for its impact on existing city trees, street trees and heritage trees, street tree planting requirements and related mitigation in accordance with Title 11, Trees and for potential impacts upon urban tree canopy. It is the applicant's responsibility to disclose all aspects of their land use proposal that may impact required street tree plantings and existing street trees during the land use review process.

UNLESS EXPLICITLY STATED HEREIN, THIS REVIEW DOES NOT APPROVE STREET TREE REMOVALS AND DOES NOT PROVIDE ANY EXEMPTIONS TO TITLE 11 REQUIRMENTS.

Permits required after land use approval are subject to all applicable development standards and all provisions of the City Code, including Title 11. Title 11 regulations will be applied during the permit review process.

PLEASE NOTE THERE MAY BE OTHER APPLICABLE TREE REQUIREMENTS AS PER TITLE 33 PLANNING & ZONING.

Response Summary

Urban Forestry does not object to approval of the land use proposal. The proposed development will be subject to Title 11 regulations during the permit review process. Additional information is required prior to full building permit review.

A. Tree Plan (11.50.070)

A Title 11 compliant tree plan must be submitted with each phase of development review and permitting including land use reviews, building permits, and public works permits. The same tree plan shall be included with each permit.
A full tree plan was not submitted with the land use proposal, and additional tree information is required.

The following information is required for street trees, Heritage trees, and trees on city owned property and was not included with the proposal:

a. Existing improvements
a. Construction staging areas
b. Proposed alterations including structures, impervious areas, grading, and utilities
c. Proposed tree activity
    1. Indicate trees to be retained and proposed tree protection
    2. Indicate trees to be removed
    3. Show location, species, planting size and number of trees to be planted
d. Protection plan
    i. The protection plan must describe the potential impacts of construction methods, staging areas, equipment usage, loading areas, and building materials that will impact regulated trees. The plan must describe how the existing street, heritage, and city trees will have continued protection, in accordance with the protection requirements of 11.60, during the proposed development.

A. Street Trees

1. *Existing Street Conditions*
    a. N Williams Ave: The site has approximately 165 feet of street frontage. The right-of-way is improved with pavement, curbs and sidewalks. There are no overhead high voltage power lines. There are no street trees.

    b. N Alberta St: The site has approximately 220 feet of street frontage. The right-of-way is improved with pavement, curbs, planting strip, sidewalks. There are overhead high voltage power lines. There are 2 street trees.
        i. Mountain ash *(Sorbus aucuparia*) 10" DBH. Trees are dead.

2. *Street Tree Preservation* (11.50.040)
The 2 dead trees along N Alberta St will be approved for removal and shall be removed.
Due to the species and condition of trees removed, no trees are required to be planted to mitigate the loss as a result of this project.

3. *Street Tree Planting* (11.50.060.C)
The applicant has not provided a conceptual street tree planting plan. One street tree must be planted or retained for each full increment of 25 linear feet (11.50.060.C.1). Street trees must be planted at a minimum 2 caliper inches. Trees will be required to be planted through the Building Permit and the Public Works Permit.

Street tree planting may be exempt under 11.50.060.B when existing above or below grade utilities prevent planting street trees or when the existing planting strip is less than 3-feet wide.

Due to the existing condition of the right-of-way, street trees may not be required unless PBOT requires frontage improvements.

B. On Site Trees

City Managed Sites (11.50.040.C.2.a)

For development on City owned or managed sites applicants are required to consult with the City Forester at the preliminary project design phase if City or Street Tree removal is likely to occur to complete the project. The purpose of this consultation is to identify potential impacts and opportunities to retain existing trees, as well as any measures required to protect trees on site. (11.50.040)

The proposal has not yet been reviewed by Urban Forestry. If this will stay City Property when permits are submitted a PPDF (see below) will need to be submitted.

There is no record of Urban Forestry having been consulted in regard to this project. A Preliminary Project Design Form must be submitted with Urban Forestry. The Preliminary Design Form can be found here: https://www.portland.gov/trees/trees-development/documents/urban-forestry-preliminary-project-design-form

Existing On-Site Conditions

As noted in the arborist inventory,

The site is generally level in elevation with turf grass predominating. There are significant amounts of invasive ground cover (Himalayan blackberry, English ivy and Clematis vitalba). Large stems of Cherry laurel (Prunus laurocerasus) are growing around the existing structure and along the south fence line.

1. *On-Site Tree Preservation* (11.50.040)
   The applicant proposes to remove the following:
   There are 20 trees over six inches proposed for removal for the project as refenced in the arborist report. There are four non-exempt trees slated for removal for the project.

   These are a 17" English walnut, a 28", and 25" Western red cedars and a 11' Pacific dogwood.

   The proposed tree removal(s) may be permitted for removal during the appropriate development permit. These trees are current located on an fairly open lot with expected full root systems that would be greatly impacted by the hardscape and infrastructure needed for this housing project.

   On City-owned or managed sites, healthy, non-nuisance trees ≥ 6" DBH that are approved for removal shall be replanted in accordance with the Administrative Rule PRK-2.04 to mitigate the tree canopy loss as a result of the project. Mitigation for trees removed shall occur in the street planter strip, on site, or in the same watershed either by planting or by paying fees-in-lieu of planting for each tree not planted. Mitigation will be required through the appropriate development permit. Fees-in-lieu will be charged in accordance with the Title 11 Trees Fee Schedule.

   Based on this the project would require 16 new trees to be planted to mitigate the loss of the four trees removed. These would need to be added to the project or shown to be planted on a separate parcel within the City of Portland. **A fee of $10,800** (1.5 inch caliper x $450 per inch x 16) would be required to be paid into the City Tree Planting and Preservation Fund if these trees cannot be planted.

Tree Replacement for Development on City Owned or Managed Sites

Size of tree to be removed (inches in diameter)	No. of trees to be planted
6 and up to 12	up to 2
More than 12 and up to 20	up to 3
More than 20 and up to 25	up to 5
More than 25	up to 6

The land use proposal has not provided adequate information to determine if existing trees may be approved and permitted for removal as part of the proposed development during the permit review process. A full Tree Plan and assessment of preservation possibilities must be provided as part of the permit set.

All trees not approved for removal are required to be retained and protected during all stages of the development.

The project also identifies two exempt trees (#5 and #14) that are located outside of the project property but will likely be greatly impacted by the project. Prior to permit release the project must create a protection plan for these trees or coordinate with adjacent property owners to coordinate tree removal.

1. *On-Site Tree Protection Specifications* (11.60.030)
The applicant has not provided a tree protection plan. Tree protection is required for all trees required to be retained in accordance with Title 11 Trees, Protection Methods (11.60.030). Tree protection shall follow either the Prescriptive or Performance path. Protection methods must be shown on the tree plan. If using the Performance path, the alternate tree protection plan must be prepared by an arborist who has visited the site. The protection plan must describe the potential impacts of construction methods, staging areas, equipment usage, loading areas, and building materials that will impact regulated trees.

   The project also identifies two exempt trees (#5 and #14) that are located outside of the project property but will likely be greatly impacted by the project. Prior to permit release the project must create a protection plan for these trees or coordinate with adjacent property owners to coordinate tree removal.

2. *On-Site Tree Density Standards* (11.50.050.D)
The applicant has provided a tree planting plan. The required tree area is based on the size and the type of proposed existing development as shown in Title 11 Table 50-2. Trees must be planted at a minimum 1.5 caliper inches. Trees will be required to be planted through the permit review process.

   Species changes to the on-site tree planting plan may be required to ensure that density is met and that species approved by Urban Forestry are selected.

C. Heritage Trees

Heritage Trees (11.20.060):

There is not a tree located on/adjacent to/neighboring the site on the City of Portland's Heritage Tree list.

D. Recommendations

Urban Forestry has no objection to the proposed project with the following conditions:
A Preliminary Project Design Form must be submitted with Urban Forestry prior to building permit submittal.

The Preliminary Design Form can be found here: https://www.portland.gov/trees/trees-development/documents/urban-forestry-preliminary-project-design-form

City of Portland, Oregon - Bureau of Development Services

1900 SW Fourth Avenue • Portland, Oregon 97201 | 503-823-7300 | www.portland.gov/bds

Land Use Review Application

File Number: LU 23-103655 DZ

FOR INTAKE, STAFF USE ONLY

Date Rec 11/16/23 by ejd

☐ Type I ☐ Type Ix ☒ Type II ☐ Type IIx ☐ Type III ☐ Type IV ☐ ELD

LU Reviews DZ (using footnote 2) Tier E

[Y] [N] Unincorporated MC

[Y] [N] Flood Hazard Area (LD & PD only)

[Y] [N] Potential Landslide Hazard Area (LD & PD only)

[Y] [N] 100-year Flood Plain [Y] [N] DOGAMI

Qtr Sec Map(s) 2530 Zoning CM2d (MU-U)

Plan District None

Historic and/or Design District d-overlay

Neighborhood Humboldt

District Coalition NECN

Business Assoc WIlliams District, Soul District

Related File # EA 23-033320, EA 23-052200 DA

APPLICANT: Complete all sections below that apply to the proposal. Please print legibly.
Email this application and supporting documents to: LandUseIntake@portlandoregon.gov

Development Site Address or Location 4931-4947 N Williams Ave

Cross Street N Alberta St. **Sq. ft./Acreage** 41,211 sf

Site tax account number(s)

R 308855 | R 639049 | R 308856

R 308873 | R 308872 | R 308871

Describe project (attach additional page if necessary)

The proposed building is a four-story structure of approximately 80,670 square feet. The building program consists of 75 units of affordable housing including one-bedroom, two-bedroom, and three-bedroom units. Ground floor use consists of a mixture of housing units, building lobby, property management offices, and community amenity spaces. The site consists of a courtyard amenity and 31 surface parking spaces accessed off NE Alberta west of the building.

Describe proposed stormwater disposal methods

Stormwater runoff from proposed impervious and landscape areas of the site will be collected via area drains and downspouts and piped to a sedimentation manhole; water will then infiltrate via a drywell system.

Identify requested land use reviews

Type II

- **Design & Historic Reviews -** For **new development**, provide project valuation. $ 24,000,000
  For **renovation**, provide exterior alteration value. $ _____
  AND provide total project valuation. $ _____
- **Land Divisions -** Identify number of lots (include lots for existing development). _____
  New street (public or private)? ☐ yes ☑ no
- **Affordable Housing -** For buildings containing five or more dwelling units, will 50% or more of the units be affordable to households with incomes equal to or less than 60% of the median family income for the county or state, whichever is greater? ☑ yes ☐ no ☐ N/A

continued / over

Applicant Information

- Identify the primary contact person, applicant, property owner and contract purchaser. Include any person that has an interest in your property or anyone you want to be notified. Information provided, including telephone numbers and e-mail addresses, will be included in public notices.
- For all reviews, the applicant must sign the Responsibility Statement.
- For land divisions, all property owners must sign the application.

PRIMARY CONTACT:

Typed Full Name: Cole Poland ☑ I acknowledge this typed name as my signature

Company/Organization: Holst Architecture

Mailing Address: 123 NE 3rd Ave, STE 310

City: Portland State: OR Zip Code: 97232

Day Phone: (503) 233-9856 FAX: email: cpoland@holstarc.com

Check all that apply ☑ Applicant ☐ Owner ☐ Other

Typed Full Name: James Lee ☑ I acknowledge this typed name as my signature

Company/Organization: Community Development Partners

Mailing Address: 126 NE Alberta St, STE 202

City: Portland State: OR Zip Code: 97211

Day Phone: (971) 533 7466 FAX: email: james@communitydevpartners.com

Check all that apply ☐ Applicant ☐ Owner ☐ Other party of interest

Typed Full Name: Kate Piper ☑ I acknowledge this typed name as my signature

Company/Organization: Portland Housing Bureau

Mailing Address: 1900 SW 4th Ave, STE 7007

City: Portland State: OR Zip Code: 97201

Day Phone: (503) 865 6868 FAX: email: kate.piper@portlandoregon.gov

Check all that apply ☐ Applicant ☐ Owner ☐ Other party of interest

Typed Full Name: ☐ I acknowledge this typed name as my signature

Company/Organization:

Mailing Address:

City: State: Zip Code:

Day Phone: FAX: email:

Check all that apply ☐ Applicant ☐ Owner ☐ Other

Responsibility Statement As the applicant submitting this application for a land use review, I am responsible for the accuracy of the information submitted. The information being submitted includes a description of the site conditions. I am also responsible for gaining the permission of the owner(s) of the property listed above in order to apply for this review and for reviewing the responsibility statement with them. If the proposal is approved, the decision and any conditions of the approval must be recorded in the County Deed Records for the property. The City of Portland is not liable if any of these actions are taken without the consent of the owner(s) of the property. In order to process this review, City staff may visit the site, photograph the property, or otherwise document the site as part of the review. I understand that the completeness of this application is determined by the Director. By my signature, I indicate my under-standing and agreement to the Responsibility Statement.

Name of person submitting this application agrees to the above Responsibility Statement and acknowledges typed name as signature:

Cole Poland Date: 2023.11.15

Phone number: 503.233.9856

Email this application and supporting documents to LandUseIntake@portlandoregon.gov

Submittal of locked or password protected documents will delay intake of your application.