City Of Portland
REVIEWED FOR CODE COMPLIANCE
Date: 11/29/23
Permit #: 23-102252-000-00-RS

AERIAL SITE VIEW

JURISDICTION CODES AND STANDARDS

GOVERNING CODES
1. ALL WORK SHALL COMPLY WITH:
2021 OREGON ELECTRICAL SPECIALTY CODE (OESC)
2022 OREGON STRUCTURAL SPECIALTY CODE (OSSC)
2021 OREGON RESIDENTIAL SPECIALTY CODE (ORSC)
2019 OREGON FIRE CODE (IFC)
2021 OREGON PLUMBING SPECIALTY CODE

AND ALL STATE AND LOCAL BUILDING, ELECTRICAL, AND PLUMBING CODES.

SITE CLASSIFICATION NOTES, OSHA REGULATION
OCCUPANCY CLASS: SFR
CONSTRUCTION CLASS: V-B
ZONING TYPE: RESIDENTIAL

1. A LADDER SHALL BE IN PLACE FOR INSPECTION IN COMPLIANCE WITH OSHA REGULATIONS.
2. THIS PROJECT HAS BEEN REVIEWED AND WILL NOT DIRECT CONCENTRATED SOLAR RADIATION OR GLARE ONTO NEARBY PROPERTIES OR ROADWAYS.
3. JUNCTION BOXES UNDER PV ARRAY SHALL BE INSTALLED TO BE CONSIDERED ACCESSIBLE BY OESC 690.34

ELECTRICAL CRITERIA, NOTES
TEMPERATURE SOURCE: ASHRAE
WEATHER STATION: PORTLAND INTL AP
EXTREME MIN. TEMPERATURE: -6
ASHRAE 0.4% HIGH TEMP: 36

1. DRAWINGS HAVE BEEN DETAILED ACCORDING TO UL LISTING REQUIREMENTS.
2. TERMINALS AND LUGS WILL BE TIGHTENED TO MANUFACTURER TORQUE SPECIFICATIONS (WHEN PROVIDED) IN ACCORDANCE WITH NEC 110.14(D) ON ALL ELECTRICAL.
3. PV MODULE CERTIFICATIONS WILL INCLUDE UL1703, IEC61646, IEC61730.
4. CONDUIT AND WIRE SPECIFICATIONS ARE BASED ON MINIMUM CODE REQUIREMENTS AND ARE NOT MEANT TO LIMIT UP-SIZING AS REQUIRED BY FIELD CONDITIONS.
5. PROPER ACCESS AND WORKING CLEARANCE AROUND EXISTING AND PROPOSED ELECTRICAL EQUIPMENT WILL BE PROVIDED AS PER SECTION [NEC 110.26].
6. WHERE PV CABLES ON ROOFTOP WOULD OTHERWISE BE EXPOSED TO PHYSICAL DAMAGE, 3/4" EMT SHALL BE USED TO PROTECT CABLES

STRUCTURAL CRITERIA, NOTES
DESIGN LOAD STANDARD: ASCE 7-16
WIND EXPOSURE CATEGORY: C
WIND SPEED (3-SEC GUST): 97 MPH
GROUND SNOW LOAD: 36 PSF
DESIGN ROOF SNOW LOAD: 26 PSF
SEISMIC DESIGN CATEGORY: D
SEISMIC RISK FACTOR: II

23-102252 RS

SCOPE OF WORK

INSTALLATION OF UTILITY INTERACTIVE PHOTOVOLTAIC SOLAR SYSTEM

5.46 kW DC & 3.77 kW AC PHOTOVOLTAIC SOLAR ARRAY

PV MODULES: (13) SILFAB SOLAR SIL-420 HC+
INVERTER(S): (13) ENPHASE IQ8PLUS-72-2-US

ROOF TYPE: COMPOSITION SHINGLE - 1 LAYER(S)
PV MOUNTING HARDWARE: ECOFASTEN CLICKFIT STANDARD

SHEET LIST

G-1	COVER SHEET
V-2	SITE PLAN
S-3	ROOF PLAN
S-4	STRUCTURAL DETAILS
S-4.1	STRUCTURAL SIDE VIEW
S-5	STRUCTURAL CALCULATIONS & NOTES
E-6	ELECTRICAL DETAILS (LINE DIAGRAM)
E-7	ELECTRICAL CALCULATIONS & NOTES
E-9	ELECTRICAL LABELS & LOCATIONS

ION

CONFIDENTIAL - THE INFORMATION HEREIN CONTAINED SHALL NOT BE USED FOR THE BENEFIT OF ANYONE EXCEPT ION DEVELOPER, LLC NOR SHALL IT BE DISCLOSED IN WHOLE OR IN PART TO OTHERS OUTSIDE RECIPIENTS ORGANIZATION, EXCEPT IN CONNECTION WITH THE SALE AND USE OF THE RESPECTIVE EQUIPMENT, WITHOUT THE WRITTEN PERMISSION OF ION DEVELOPER, LLC.

NABCEP BOARD CERTIFIED
PV INSTALLATION PROFESSIONAL
SCOTT A. GURNEY
#PV-017719-01586
EXP. 3-17-2025

ION DEVELOPER, LLC

44 E 800 N OREM, UT 84057
888.781.7074

DAVID STANLEY CONRAD
C - ELECTRICAL CONTRACTOR
C1524

SITE INFORMATION:
PHILIP E BLECK
3232 SOUTHEAST 162ND AVENUE
PORTLAND, OREGON 97236

(13) SILFAB SOLAR SIL-420 HC+
(13) ENPHASE IQ8PLUS-72-2-US
5.46KW DC, 3.77KW STC-AC,
4.873KW CEC-AC

DRAWING BY
AILA DIMATATAC

DATE
08-Nov-2023

PROJECT ID
00BF71

SHEET NAME
COVER SHEET

SHEET NUMBER
G-1

REVISON
0

City Of Portland
REVIEWED FOR CODE COMPLIANCE
Date: 11/29/23
Permit #: 23-102252-000-00-RS

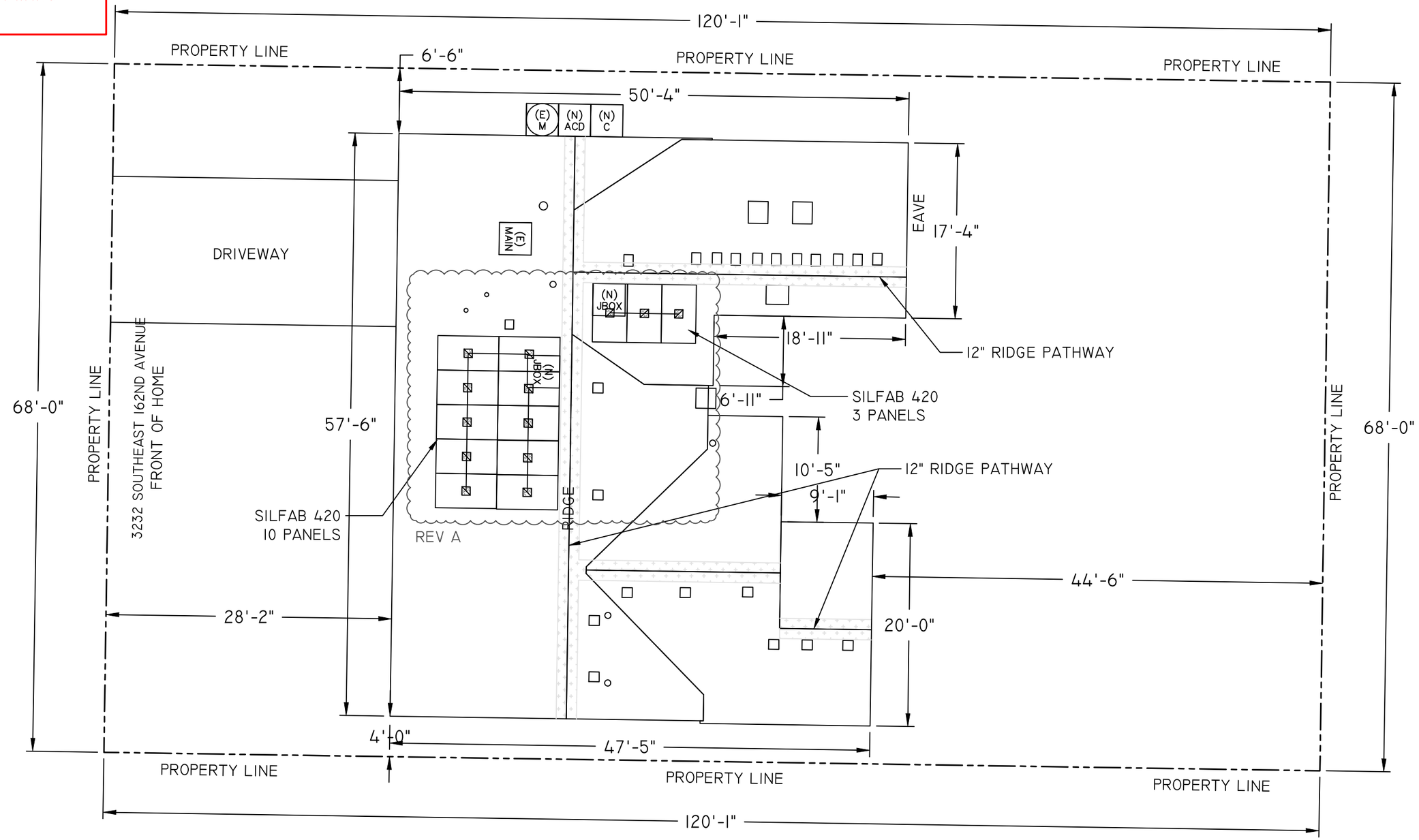

SCALE: 0.008201
0' 2'-6 1/2" 5'-1" 10'-1 7/8" 20'-3 7/8"

ION

CONFIDENTIAL - THE INFORMATION HEREIN CONTAINED SHALL NOT BE USED FOR THE BENEFIT OF ANYONE EXCEPT ION DEVELOPER, LLC NOR SHALL IT BE DISCLOSED IN WHOLE OR IN PART TO OTHERS OUTSIDE RECIPIENTS ORGANIZATION, EXCEPT IN CONNECTION WITH THE SALE AND USE OF THE RESPECTIVE EQUIPMENT, WITHOUT THE WRITTEN PERMISSION OF ION DEVELOPER, LLC.

NABCEP BOARD CERTIFIED
PV INSTALLATION PROFESSIONAL
SCOTT A. GURNEY
#PV-017719-01586
EXP. 3-17-2025

ION DEVELOPER, LLC

44 E 800 N OREM, UT 84057
888.781.7074

DAVID STANLEY CONRAD
C - ELECTRICAL CONTRACTOR
C1524

SITE INFORMATION:
PHILIP E BLECK
3232 SOUTHEAST 162ND AVENUE
PORTLAND, OREGON 97236

(13) SILFAB SOLAR SIL-420 HC+
(13) ENPHASE IQ8PLUS-72-2-US
5.46KW DC, 3.77KW STC-AC,
4.873KW CEC-AC

DRAWING BY
AILA DIMATATAC

DATE
21-Nov-2023

PROJECT ID
00BF71

SHEET NAME
SITE PLAN

SHEET NUMBER
V-2

REVISON
A

Submitted 11/22/2023

City of Portland
REVIEWED FOR CODE COMPLIANCE
Date: 11/29/23
Permit#: 23-100255-000-00-RS

SITE NOTES:

JUNCTION BOXES UNDER PV ARRAY SHALL BE INSTALLED TO BE CONSIDERED ACCESSIBLE BY OESC 690.34

FOR ANY METER UPGRADES, ENSURE THAT THE UTILITY METER IS LOCATED WITHIN 10FT OF THE FRONT/STREET-SIDE OF THE HOUSE. PLEASE ADD A LABEL SHOWING THE DISTANCE FROM THE FRONT CORNER OF THE HOUSE.

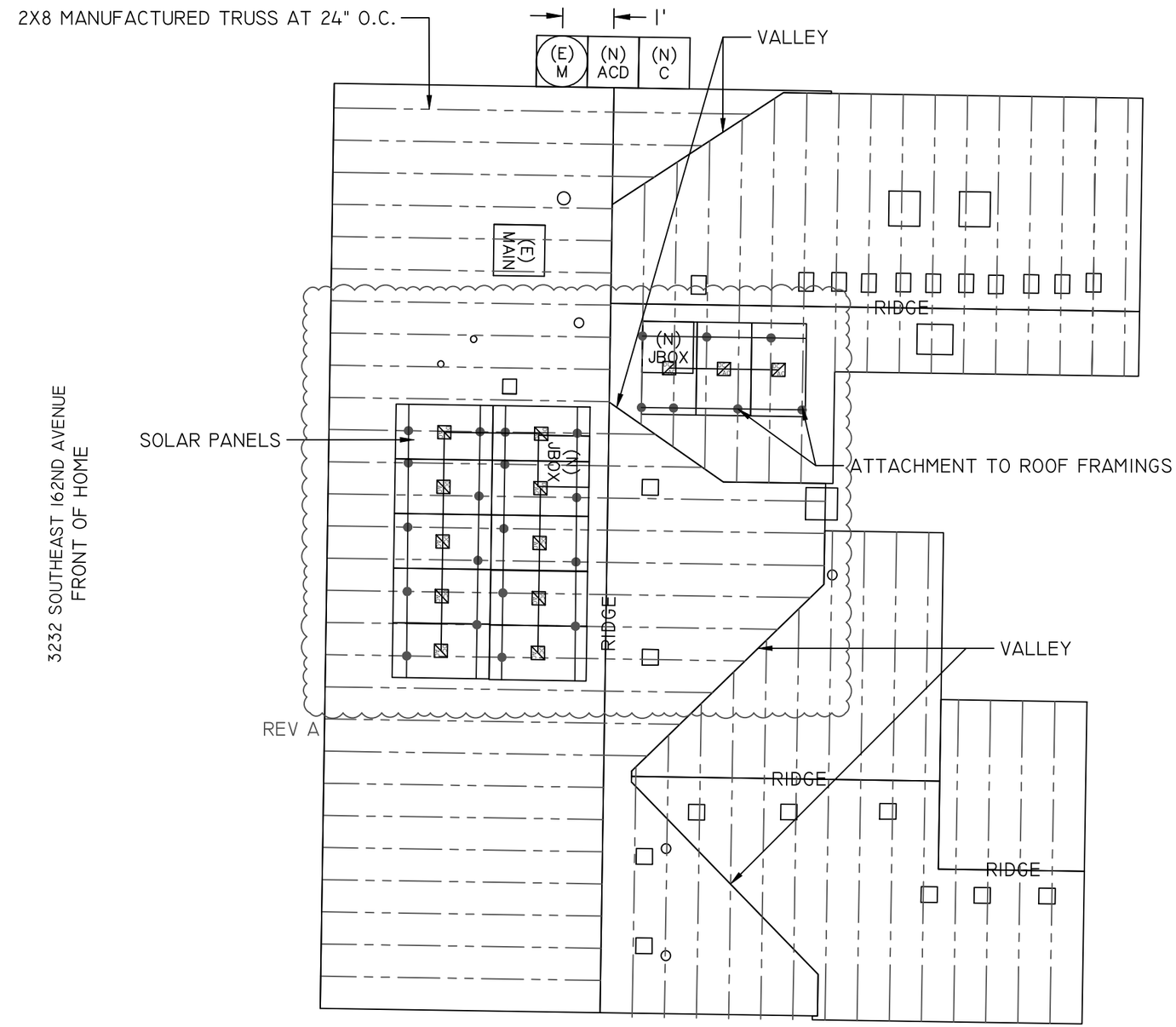

SCALE: 1/8" = 1'-0"

0' 2' 4' 8' 16'

SYSTEM LEGEND

- (E) M — (E) UTILITY METER / MAIN SERVICE PANEL
- (E) MAIN — (E) MAIN SERVICE PANEL
- (E) SUB — (E) SUBPANEL
- (N) C — (N) PV COMBINER PANEL
- (N) LC — (N) PV LOAD CENTER
- (N) PVM — (N) PV PRODUCTION METER
- (N) I — (N) DC-DC / STRING INVERTER
- (N) JBOX — (N) JUNCTION BOX
- (N) ACD — (N) AC DISCONNECT (VISIBLE-OPEN LOCKABLE LABELED DISCONNECT)
- DC/AC — (N) MICROINVERTER
- (N) DCD — (N) DC DISCONNECT
- S# — SUNEYE LOCATION
- FIRE SETBACK
- (N) PV MODULE
- STRUCTURALLY DISQUALIFIED

ROOF SECTION CRITERIA AND SPECIFICATIONS

ROOF SECTION	PV MODULE QTY	AZIMUTH	PITCH	TSRF
RS1	3	271	16	85%
RS2	10	181	23	94%

N

ION

CONFIDENTIAL - THE INFORMATION HEREIN CONTAINED SHALL NOT BE USED FOR THE BENEFIT OF ANYONE EXCEPT ION DEVELOPER, LLC NOR SHALL IT BE DISCLOSED IN WHOLE OR IN PART TO OTHERS OUTSIDE RECIPIENTS ORGANIZATION, EXCEPT IN CONNECTION WITH THE SALE AND USE OF THE RESPECTIVE EQUIPMENT, WITHOUT THE WRITTEN PERMISSION OF ION DEVELOPER, LLC.

NABCEP BOARD CERTIFIED
PV INSTALLATION PROFESSIONAL
SCOTT A. GURNEY
#PV-017719-01586
EXP. 3-17-2025

ION DEVELOPER, LLC

44 E 800 N OREM, UT 84057
888.781.7074

DAVID STANLEY CONRAD
C - ELECTRICAL CONTRACTOR
C1524

SITE INFORMATION:
PHILIP E BLECK
3232 SOUTHEAST 162ND AVENUE
PORTLAND, OREGON 97236

(13) SILFAB SOLAR SIL-420 HC+
(13) ENPHASE IQ8PLUS-72-2-US
5.46KW DC, 3.77KW STC-AC,
4.873KW CEC-AC

DRAWING BY
AILA DIMATATAC

DATE
21-Nov-2023

PROJECT ID
00BF71

SHEET NAME
ROOF PLAN

SHEET NUMBER
S-3

REVISON
A

Submitted 11/22/2023

City of Portland
REVIEWED FOR CODE COMPLIANCE
Date: 11/29/23
Permit # 23-102252-000-00-RS

STRUCTURAL INSTALLATION SCHEDULE AND CRITERIA

ROOF MEMBRANE	
	COMPOSITION SHINGLE
ROOF SHEATHING TYPE:	1/2" PLYWOOD

ARRAY PARAMETERS	
TOTAL ROOF AREA (SQ. FT.)	2654.76
TOTAL PV MODULE AREA (SQ. FT.)	276.9
% PV MODULE ROOF COVERAGE	10.43%

PV RACKING	
RACKING:	ECOFASTEN CLICKFIT STANDARD
RACKING TYPE:	RAIL
STANDOFF:	CLICKFIT L-FOOT
STANDOFF TYPE:	L-FOOT & FLASHING
FASTENER:	5/16" X 3-1/2" ZINC PLATED STEEL LAG SCREW

SPAN AREA	TAG	SPAN
RAIL - PORTRAIT - MODULE ORIENTATION		
X- SPACING	P-X1	48 IN. O.C. MAX.
X- CANTILEVER	P-X2	16 IN. MAX.
Y- SPACING	P-Y1	41.3 IN. MIN. - 45.3 IN. MAX.
Y- CANTILEVER	P-Y2	15 IN. MIN. - 17 IN. MAX.
RAIL - LANDSCAPE - MODULE ORIENTATION		
X- SPACING	L-X1	48 IN. O.C. MAX.
X-CANTILEVER	L-X2	16 IN. MAX.
Y- SPACING	L-Y1	21.1 IN. MIN. - 25.1 IN. MAX.
Y-CANTILEVER	L-Y2	7.9 IN. MIN. - 9.8 IN. MAX.

STRUCTURAL FRAMING

ROOF SECTION	*STRUCTURE TYPE*	*RAFTER / TC SIZE (IN)*	*RAFTER / TC SPACING (IN)*	*STRUCTURAL UPGRADE*	*UPGRADE SIZE & LENGTH (FT)*
RS1	MANUFACTURED WOOD TRUSS	2x8	24	NONE - SINGLE PLY (1x)	NONE
RS2	MANUFACTURED WOOD TRUSS	2x8	24	NONE - SINGLE PLY (1x)	NONE

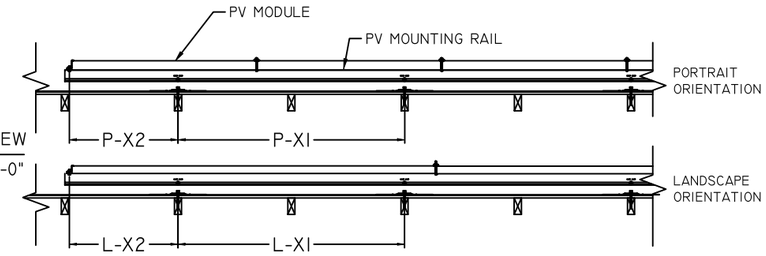

PV ARRAY DETAIL, FRONT VIEW
SCALE: 3" = 1'-0"

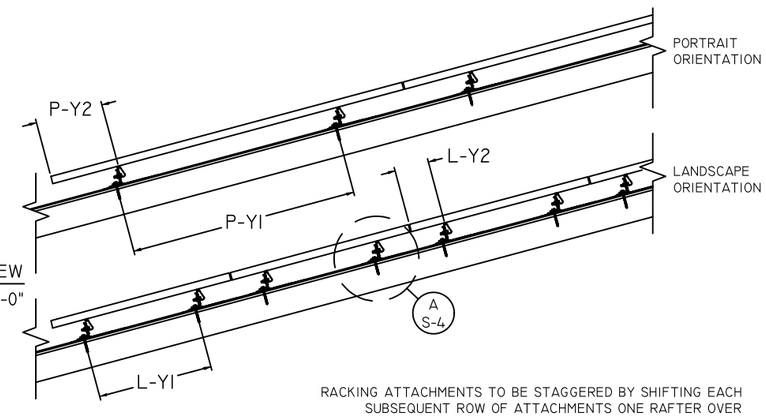

PV ARRAY DETAIL, SIDE VIEW
SCALE: 3" = 1'-0"

RACKING ATTACHMENTS TO BE STAGGERED BY SHIFTING EACH SUBSEQUENT ROW OF ATTACHMENTS ONE RAFTER OVER TO DISTRIBUTE LOAD ACROSS ALL FRAMING MEMBERS UNDER PV ARRAY.

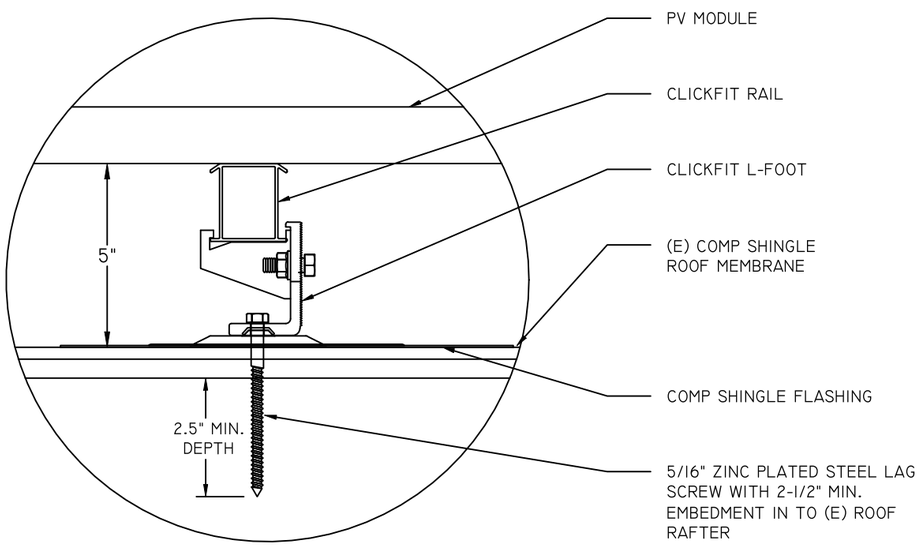

A COMP SHINGLE - CLICKFIT LFOOT / FLASHING - STANDOFF DETAIL
SCALE: 3" = 1'-0"

ION

CONFIDENTIAL - THE INFORMATION HEREIN CONTAINED SHALL NOT BE USED FOR THE BENEFIT OF ANYONE EXCEPT ION DEVELOPER, LLC NOR SHALL IT BE DISCLOSED IN WHOLE OR IN PART TO OTHERS OUTSIDE RECIPIENTS ORGANIZATION, EXCEPT IN CONNECTION WITH THE SALE AND USE OF THE RESPECTIVE EQUIPMENT, WITHOUT THE WRITTEN PERMISSION OF ION DEVELOPER, LLC.

NABCEP BOARD CERTIFIED
PV INSTALLATION PROFESSIONAL
SCOTT A. GURNEY
#PV-017719-01586
EXP. 3-17-2025

ION DEVELOPER, LLC

44 E 800 N OREM, UT 84057
888.781.7074

DAVID STANLEY CONRAD
C - ELECTRICAL CONTRACTOR
C1524

SITE INFORMATION:
PHILIP E BLECK
3232 SOUTHEAST 162ND AVENUE
PORTLAND, OREGON 97236

(13) SILFAB SOLAR SIL-420 HC+
(13) ENPHASE IQ8PLUS-72-2-US
5.46KW DC, 3.77KW STC-AC,
4.873KW CEC-AC

DRAWING BY
AILA DIMATATAC

DATE
21-Nov-2023

PROJECT ID
00BF71

SHEET NAME
STRUCTURAL DETAILS

SHEET NUMBER
S-4

REVISON
A

Submitted 11/22/2023

City Of Portland
REVIEWED FOR CODE COMPLIANCE
Date: 11/29/23
Permit #: 23-102252-000-00-RS

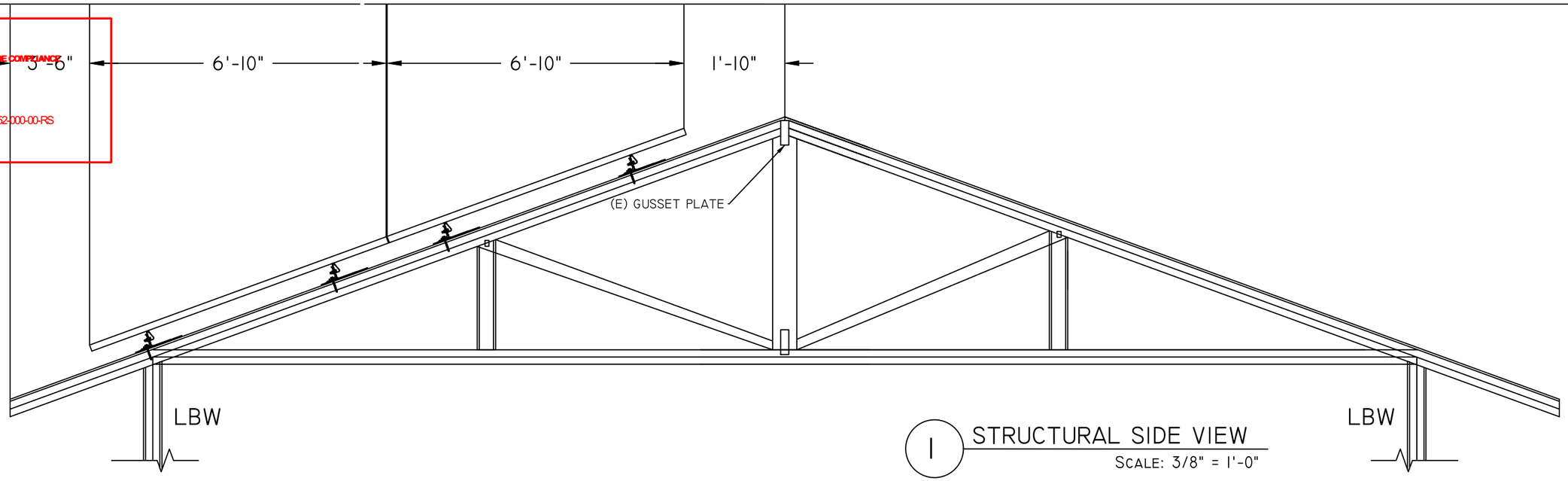

1 STRUCTURAL SIDE VIEW
SCALE: 3/8" = 1'-0"

TRUSS MEMBER 2X8 @ 24" OC
CEILING JOIST 2X8 @ 24" OC

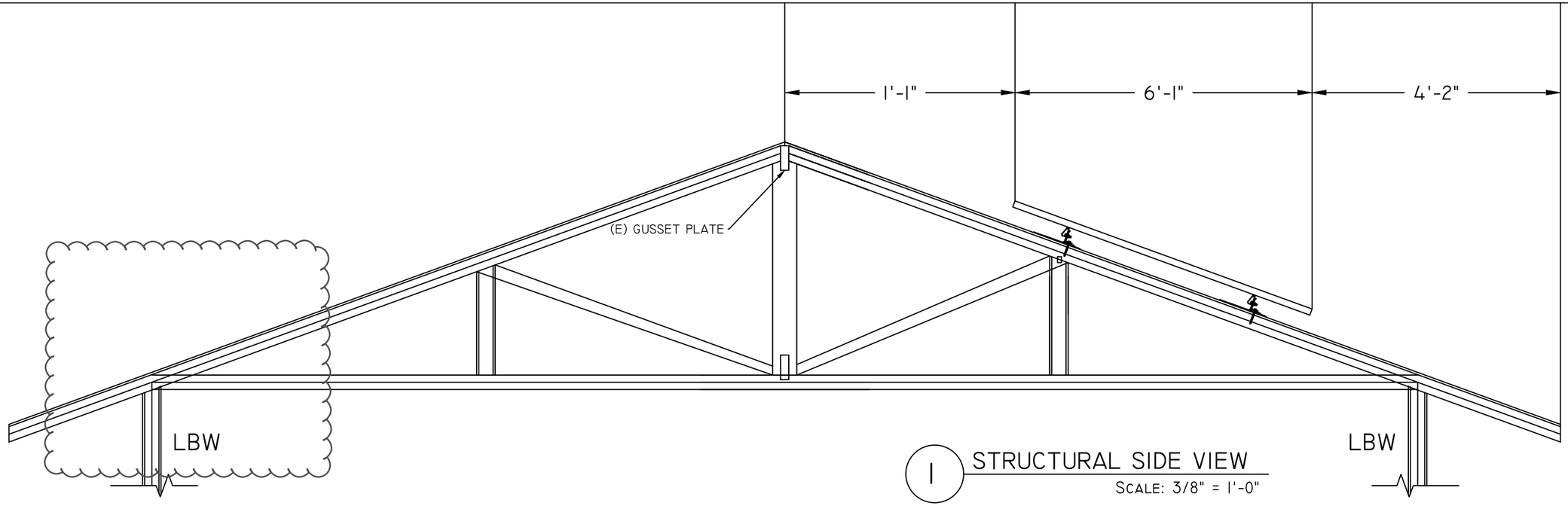

1 STRUCTURAL SIDE VIEW
SCALE: 3/8" = 1'-0"

TRUSS MEMBER 2X8 @ 24" OC
CEILING JOIST 2X8 @ 24" OC

ION

CONFIDENTIAL - THE INFORMATION HEREIN CONTAINED SHALL NOT BE USED FOR THE BENEFIT OF ANYONE EXCEPT ION DEVELOPER, LLC NOR SHALL IT BE DISCLOSED IN WHOLE OR IN PART TO OTHERS OUTSIDE RECIPIENTS ORGANIZATION, EXCEPT IN CONNECTION WITH THE SALE AND USE OF THE RESPECTIVE EQUIPMENT, WITHOUT THE WRITTEN PERMISSION OF ION DEVELOPER, LLC.

NABCEP BOARD CERTIFIED
PV INSTALLATION PROFESSIONAL
SCOTT A. GURNEY
#PV-017719-01586
EXP. 3-17-2025

ION DEVELOPER, LLC

44 E 800 N OREM, UT 84057
888.781.7074

DAVID STANLEY CONRAD
C - ELECTRICAL CONTRACTOR
C1524

SITE INFORMATION:
PHILIP E BLECK
3232 SOUTHEAST 162ND AVENUE
PORTLAND, OREGON 97236

(13) SILFAB SOLAR SIL-420 HC+
(13) ENPHASE IQ8PLUS-72-2-US
5.46KW DC, 3.77KW STC-AC,
4.873KW CEC-AC

DRAWING BY
AILA DIMATATAC

DATE
21-Nov-2023

PROJECT ID
00BF71

SHEET NAME
STRUCTURAL SIDE VIEW

SHEET NUMBER	REVISON
S-4	A

Submitted 11/22/2023

City Of Portland
REVIEWED FOR CODE COMPLIANCE
Date: 11/22/23
Permit #: 23-102222-000-00-RS

PV SYSTEM STRUCTURAL SPECIFICATIONS AND CALCULATIONS

DESIGN LOCATION AND SITE SPECIFICATIONS

STATE	CITY OF PORTLAND
ADOPTED LOAD STANDARD	OREGON
OCCUPANCY / RISK CATEGORY	ASCE 7-16
BASIC WIND SPEED (MPH (3-SEC GUST)	II
WIND EXPOSURE CATEGORY	97
GROUND SNOW LOAD (PSF) (PG)	C
BASE ELEVATION (FT)	36
	64

PV SYSTEM STRUCTURAL SPECIFICATIONS

STRUCTURE TYPE - ROOF SHAPE	INHABITED - GABLE / FLAT ROOF
MIN. ROOF SLOPE (DEG.)	16
MEAN ROOF HEIGHT (FT.)	18
PORTRAIT ATT. SPACING (IN. O.C.)	48
LANDSCAPE ATT. SPACING (IN. O.C.)	48
# OF ATTACHMENT POINTS	28
MAX. POINT LOAD (LBS / ATT.)	37.7
MAX. TOTAL PV DEAD LOAD TO RAFTER (LBS)	75.5

PV SYSTEM EQUIPMENT SPECIFICATIONS

MODULE MANUFACTURER / TYPE	SILFAB SOLAR SIL-420 HC+
SOLAR MODULE WEIGHT (LBS)	47
SOLAR MODULE LENGTH (IN.)	75.3
SOLAR MODULE WIDTH (IN.)	40.8
SOLAR MODULE AREA (SQ. FT)	21.3
PV RACKING	ECOFASTEN CLICKFIT STANDARD
PV RACKING TYPE	RAIL
PV ROOF ATTACHMENT	CLICKFIT L-FOOT
PV ROOF ATTACHMENT FASTENER	5/16" X 3-1/2" ZINC PLATED STEEL LAG SCREW
RACKING DEAD LOAD (PSF)	0.8
SOLAR MODULE DEAD LOAD (PSF)	2.21
TOTAL PV ARRAY DEAD LOAD (PSF)	3.01

DESIGNED ROOF SNOW LOAD CALCULATIONS — ASCE 7-16 (C&C)

SLOPED ROOF SNOW LOAD (PSF) = PS = (CS)(0.7)(CE)(CT)(IS)(PG) — EQN. 7.4-1

EXPOSURE FACTOR (CE) =	1.0		TABLE 7.3-1
THERMAL FACTOR (CT) =	1.0		TABLE 7.3-2
IMPORTANCE FACTOR (IS) =	1.0		TABLE 1.5-2
SLOPE FACTOR (CS) =	1.0		FIG. 7.4-1
PS (PSF) =	26	OK	

DESIGN WIND PRESSURE CALCULATIONS — ASCE 7-16 (C&C)

DESIGN WIND PRESSURE (PSF) = P = QH(GCP)(YE)(YA) — EQN. 26.10-1

VELOCITY PRESSURE (PSF) = QH = 0.00256(KH)(KZT)(KD)(KE)(V^2) — TABLE 26.13-1

TERRAIN EXPO. CONSTANT (A) =	9.5	TABLE 26.11-1
TERRAIN EXPO. CONSTANT (ZG)(FT) =	900	TABLE 26.11-1
VP EXPOSURE COEFF.(KH) =	0.88	EQN. C26.10-1
TOPOGRAPHIC FACTOR (KZT) =	1.0	EQN. 26.8-1
WIND DIRECTIONALITY FACTOR (KD) =	0.85	TABLE 26.6-1
ARRAY EDGE FACTOR (YE) =	1	EQN. 29.4-7
QH (PSF) =	18.06	FIG. 29.4-8
		EQN. 26.10-1

RAIL - COMPRESSION / UPLIFT

ECOFASTEN CLICKFIT STANDARD — CONTINOUS SPAN BM = (WL^2)/(8(S))

MAXIMUM HORIZONTAL RAIL SPAN (FT.) =	4.0	
MAXIMUM VERTICAL SPACING BETWEEN RAILS (FT.) =	3.8	
	COMPRESSION	UPLIFT
TOTAL LOAD (PSF) =	27.8	16.3
TOTAL LOAD (W)(LB. / FT.) =	105.0	61.4
ALLOWABLE MANU. BENDING MOMENT (LB. / FT.) =	422	517
ACTUAL MAX. BENDING STRESS (LB / FT.) =	209.9	122.7
	OK	OK

CONNECTIONS - UPLIFT / DOWNWARD

GABLE ROOF 7° < Ø ≤ 20° — FIGURE 30.3-2B

RAIL - PORTRAIT MODULE ORIENTATION

	UPLIFT ZONE 1	UPLIFT ZONE 2R	UPLIFT ZONE 2E	DOWNWARD ALL ZONES
	48 IN. O.C.	48 IN. O.C.	48 IN. O.C.	48 IN. O.C.
SOLAR PANEL PRESSURE EQ. FACTOR (YA) =	0.80	0.80	0.80	0.80
EXTERNAL PRESSURE COEFF. (GCP) =	-2.0	-3.0	-3.6	0.7
ASD PRESSURE (0.6P)(PSF) =	-17.34	-26.01	-31.21	16.86
TRIBUTARY AREA (SQ. FT) =	12.6	12.6	9.4	
MAX. UPLIFT (0.6D+0.6P) (LBS) =	-194.9	-303.7	-276.8	

RAIL - LANDSCAPE MODULE ORIENTATION

	48 IN. O.C.	48 IN. O.C.	48 IN. O.C.	48 IN. O.C.
SOLAR PANEL PRESSURE EQ. FACTOR (YA) =	0.80	0.80	0.80	0.80
EXTERNAL PRESSURE COEFF. (GCP) =	-2.0	-3.0	-3.6	0.7
ASD PRESSURE (0.6P)(PSF) =	-17.34	-26.01	-31.21	16.86
TRIBUTARY AREA (SQ. FT) =	6.80	6.80	5.10	
MAX. UPLIFT (0.6D+0.6P) (LBS) =	-105.6	-164.6	-150.0	

ROOF ATTACHMENT / FASTENER CHECK — NDS 12.2

CLICKFIT L-FOOT - 5/16" X 3-1/2" ZINC PLATED STEEL LAG SCREW

LAG SCREW WITHDRAWAL DESIGN VALUE (LBS) = W = 1800(G^3/2)(D^3/4)		12.2.1
ROOF ATTACHMENT FASTENER (D) (IN.) =	5/16	TABLE 2.3.2
FASTENER QTY PER ATTACHMENT =	1	TABLE 12.3.3A
FASTENER EMBEDMENT DEPTH (IN.) =	2.5	
LUMBER SPECIFIC GRAVITY (G) =	0.5	
LOAD DURATION FACTOR (CD) =	1.6	
PRYING COEFFICIENT =	1.5	
WITHDRAWAL DESIGN VALUE(W)(LBS / IN.) =	266.0	
LAG SCREW WITHDRAWL CAPACITY (LBS) =	709.3	
MANUFACTURER MAX. UPLIFT CAPACITY (LBS) =	895.0	
MAX. ATT. WITHDRAWAL CAPACITY (LBS) =	709.3	
MAX. ATT. WITHDRAWL STRESS (LBS) =	303.7	OK

GRAVITY LOAD / FRAMING CALCULATIONS

DEAD LOAD (PSF)	R31		R62	
ROOF MEMBRANE	COMPOSITION SHINGLE	4.0	COMPOSITION SHINGLE	4.0
SHEATHING	1/2" PLYWOOD	1.7	1/2" PLYWOOD	1.7
PITCH (DEG)	16		23	
FRAMING	MANUFACTURED WOOD TRUSS - NONE - SINGLE PLY (IX) - TOP CHORD 2X8 @ 24 IN. O.C. - DF #2 @ 6 FT. MAX SPAN	1.8	MANUFACTURED WOOD TRUSS - NONE - SINGLE PLY (IX) - TOP CHORD 2X8 @ 24 IN. O.C. - DF #2 @ 6 FT. MAX SPAN	1.8
TOTAL ROOF DEAD LOAD (PSF)	7.5		7.5	
ADJUSTED TO SLOPED ROOF (PSF)	7.7		8.2	
PV ARRAY ADJ. TO ROOF SLOPE (PSF)	3.1		3.3	
ROOF LIVE LOAD < ROOF SNOW LOAD (PSF)	26.0		26.0	
TOTAL LOAD (PSF)	36.8		37.5	
RAFTER / TOP CHORD MEMBER PROPERITES	DF #2 - 2x8 - NONE - SINGLE PLY (IX)		DF #2 - 2x8 - NONE - SINGLE PLY (IX)	
SECTION MODULUS (S)(IN^3)	13.14		13.14	
MOMENT OF INERTIA (I)(IN^4)	47.63		47.63	
TOTAL LOAD ON MEMBER (W) (PLF)	73.7		74.9	
MAX. MEMBER SPAN (L) (FT)	6		6	
MODULUS OF ELASTICITY (E) (PSI)	1600000		1600000	
SHEAR (FV) (PSI)	180		180	
AREA (A) (IN^2)	10.875		10.875	
MAX BENDING STRESS CHECK	(FB)(CD)(CF)(CR)		(FB)(CD)(CF)(CR)	
BENDING (FB) (PSI)	900		900	
LOAD DURATION FACTOR (CD)	1.15		1.15	
SIZE FACTOR (CF)	1.20		1.20	
REPETITIVE MEMBER FACTOR (CR)	1.15		1.15	
ALLOWABLE BENDING STRESS (PSI)	1428.3		1428.3	
ACTUAL BENDING STRESS (PSI) = (WL^2)/(8(S))	302.8		307.9	
	21%	OK	22%	OK
MAX DEFLECTION CHECK - TOTAL LOAD	UNIFORM DISTRIBUTED		UNIFORM DISTRIBUTED	
ALLOWABLE DEFLECTION	L / 180		L / 180	
	0.400	IN.	0.400	IN.
ACTUAL MAX DEFLECTION	(W)(L)^4 / 185(E)(I)		(W)(L)^4 / 185(E)(I)	
	0.012	IN.	0.012	IN.
	3%	OK	3%	OK
MAX DEFLECTION CHECK - LIVE LOAD				
ALLOWABLE DEFLECTION	L / 240		L / 240	
	0.3	IN.	0.3	IN.
ACTUAL MAX DEFLECTION	(W)(L)^4 / 185(E)(I)		(W)(L)^4 / 185(E)(I)	
	0.010	IN.	0.010	IN.
	3%	OK	3%	OK
MAX SHEAR CHECK				
ALLOWABLE SHEAR	FV (A)		FV (A)	
	1957.5	LBS.	1957.5	LBS.
ACTUAL MAX SHEAR	(W)(L)/2		(W)(L)/2	
	221	LBS.	225	LBS.
	11%	OK	11%	OK

ION

CONFIDENTIAL - THE INFORMATION HEREIN CONTAINED SHALL NOT BE USED FOR THE BENEFIT OF ANYONE EXCEPT ION DEVELOPER, LLC NOR SHALL IT BE DISCLOSED IN WHOLE OR IN PART TO OTHERS OUTSIDE RECIPIENTS ORGANIZATION, EXCEPT IN CONNECTION WITH THE SALE AND USE OF THE RESPECTIVE EQUIPMENT, WITHOUT THE WRITTEN PERMISSION OF ION DEVELOPER, LLC.

NABCEP BOARD CERTIFIED
PV INSTALLATION PROFESSIONAL
SCOTT A. GURNEY
#PV-011719-01586
EXP. 3-17-2025

ION DEVELOPER, LLC

44 E 800 N OREM, UT 84057
888.781.7074

DAVID STANLEY CONRAD
C - ELECTRICAL CONTRACTOR
C1524

SITE INFORMATION:
PHILIP E BLECK
3232 SOUTHEAST 162ND AVENUE
PORTLAND, OREGON 97236

(13) SILFAB SOLAR SIL-420 HC+
(13) ENPHASE IQ8PLUS-72-2-US
5.46KW DC, 3.77KW STC-AC,
4.873KW CEC-AC

DRAWING BY
AILA DIMATATAC

DATE
21-Nov-2023

PROJECT ID
00BF71

SHEET NAME
STRUCTURAL CALCS

SHEET NUMBER
S-5

REVISON
A

Submitted 11/22/2023

CONDUCTOR AND RACEWAY SCHEDULE

TAG	QTY	SIZE - #	TYPE	DESIGNATOR	I / V
10	(1)	10 AWG	THHN / THWN-2, CU.	BLACK (L1)	15.73 A AC (MAX)
	(1)	10 AWG	THHN / THWN-2, CU.	RED (L2)	240 V AC
	(1)	10 AWG	THHN / THWN-2, CU.	WHITE (N)	
	(1)	10 AWG	THHN / THWN-2, CU.	GREEN (EGC)	
	(1)	3/4 IN.	EMT	(RACEWAY)	EXTERIOR
11	(1)	6 AWG	THHN / THWN, CU.	BLACK (L1)	15.73 A AC (MAX)
	(1)	6 AWG	THHN / THWN, CU.	RED (L2)	240 V AC
	(1)	6 AWG	THHN / THWN, CU.	WHITE (N)	
	(1)	6 AWG	THHN / THWN, CU.	GREEN (GEC)	
	(1)	3/4 IN.	PVC SCH. 40	(RACEWAY)	EXTERIOR

TAG	QTY	SIZE - #	TYPE	DESIGNATOR	I / V
3	(1)	10 AWG	THHN / THWN-2, CU.	BLACK (L1)	15.73 A AC (MAX)
	(1)	10 AWG	THHN / THWN-2, CU.	RED (L2)	240 V AC
	(1)	10 AWG	THHN / THWN-2, CU.	GREEN (EGC)	
	(1)	3/4 IN.	EMT	(RACEWAY)	EXTERIOR

TAG	QTY	SIZE - #	TYPE	DESIGNATOR	I / V
2	(1)	10 AWG	2C, NM-B W/G, CU. (CABLE)	(L1, L2, EGC)	15.73 A AC (MAX) 240 V AC
					INTERIOR

TAG	QTY	SIZE - #	TYPE	DESIGNATOR	I / V
1	(1)	12 AWG	2C, TC-ER, CU.	(L1, L2)	15.73 A AC (MAX)
	(1)	6 AWG	SOLID BARE CU.	(EGC)	240 V AC
					EXTERIOR

ELECTRICAL LINE DIAGRAM

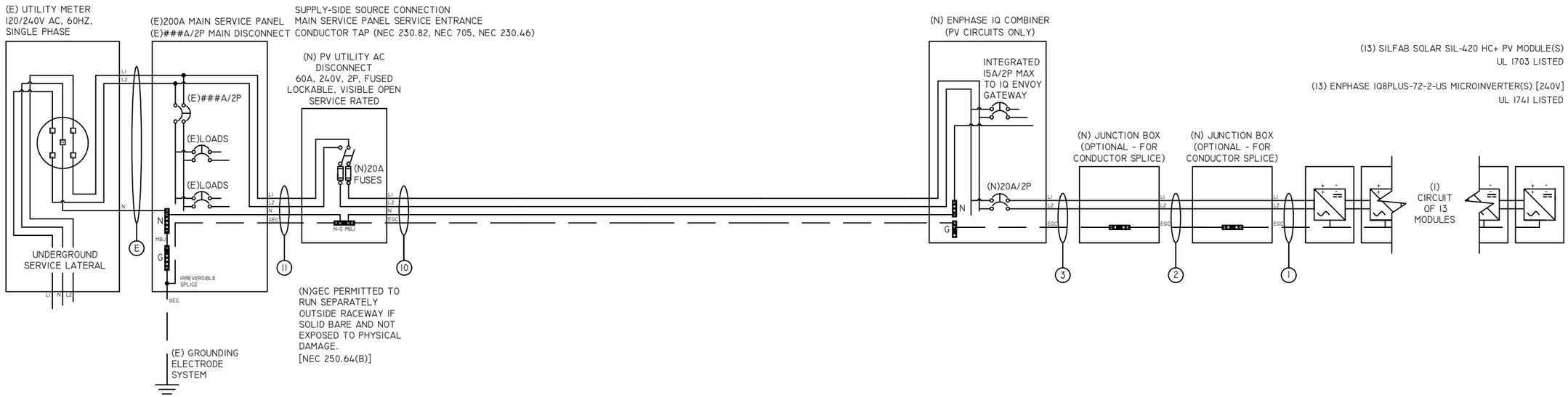

ELECTRICAL LINE DIAGRAM NOTES

ION

CONFIDENTIAL - THE INFORMATION HEREIN CONTAINED SHALL NOT BE USED FOR THE BENEFIT OF ANYONE EXCEPT ION DEVELOPER, LLC NOR SHALL IT BE DISCLOSED IN WHOLE OR IN PART TO OTHERS OUTSIDE RECIPIENTS ORGANIZATION, EXCEPT IN CONNECTION WITH THE SALE AND USE OF THE RESPECTIVE EQUIPMENT, WITHOUT THE WRITTEN PERMISSION OF ION DEVELOPER, LLC.

NABCEP BOARD CERTIFIED
PV INSTALLATION PROFESSIONAL
SCOTT A. GURNEY
#PV-011719-01586
EXP. 3-17-2025

ION DEVELOPER, LLC

44 E 800 N OREM, UT 84057
888.781.7074

DAVID STANLEY CONRAD
C - ELECTRICAL CONTRACTOR
C1524

SITE INFORMATION:
PHILIP E BLECK
3232 SOUTHEAST 162ND AVENUE
PORTLAND, OREGON 97236

(13) SILFAB SOLAR SIL-420 HC+
(13) ENPHASE IQ8PLUS-72-2-US
5.46KW DC, 3.77KW STC-AC,
4.873KW CEC-AC

DRAWING BY	AILA DIMATATAC
DATE	08-Nov-2023
PROJECT ID	00BF71
SHEET NAME	ELEC. LINE DIAG.
SHEET NUMBER	E-6
REVISON	0

PV SYSTEM ELECTRICAL SPECIFCATIONS AND CALCULATIONS

DESIGN LOCATION AND TEMPERATURES

TEMPERATURE DATA SOURCE	ASHRAE
STATE	OREGON
JURISDICTION	CITY OF PORTLAND
WEATHER STATION	PORTLAND INTL AP
ASHRAE EXTREME LOW TEMP (°C)	-6
ASHRAE 0.4% HIGH TEMP (°C)	36
DESIGNED MAX. SYSTEM VDROP / VRISE	4.00%

PV MODULE SPECIFICATIONS — SILFAB SOLAR SIL-420 HC+

RATED POWER (PMAX) (W)	420
MAXIMUM POWER VOLTAGE (VMP)	39.19
MAXIMUM POWER CURRENT (IMP)	10.72
OPEN CIRCUIT VOLTAGE (VOC)	45.67
SHORT CIRCUIT CURRENT (ISC)	11.46
PMP/VMP TEMP. COEFFICIENT	-0.36
VOC TEMP. COEFFICIENT	-0.28
SERIES FUSE RATING	20
ADJ. MODULE VOC @ ASHRAE LOW TEMP	49.6
ADJ. MODULE VMP @ ASHRAE 2% AVG. HIGH TEMP	33.1

INVERTER SPECIFICATIONS — ENPHASE IQ8PLUS-72-2-US

TYPE	MICROINVERTER
MAX. OR RECOMMENDED MODULE POWER (W)	440
MAXIMUM INPUT DC OPEN-CIRCUIT VOLTAGE (VOC)	60
MINIMUM START VOLTAGE (V)	30
MAXIMUM START VOLTAGE(V)	58
MAXIMUM INPUT CURRENT (ISC) (A)	15
MAX CONTINUOUS OUTPUT POWER (VA)	290
MAX. CONTINUOUS OUTPUT CURRENT (A)	1.21
NOMINAL (L-L) OUTPUT VOLTAGE	240
CEC WEIGHTED EFFICIENCY (%)	97.0%

SYSTEM ELECTRICAL SPECIFICATIONS — CIR 1

NUMBER OF MODULES PER CIRCUIT	13
DC POWER RATING PER CIRCUIT (STC)(W DC)	5460
TOTAL MODULE QUANTITY	13 PV MODULES
STC DC POWER RATING OF ARRAY	5460W DC
INVERTER OUTPUT CIRCUIT CURRENT(A AC)	15.73
125% INVERTER OUTPUT CIRCUIT CURRENT(A AC)	19.66
CIRCUIT OCPD RATING (A)	20
COMBINED INVERTER CONTINUOUS OUTPUT CURRENT	15.73A AC
PV POWER PRODUCTION SYSTEM OCPD RATING (X125%)	20A
MAX. ARRAY STC-AC POWER (W)	3770W AC (STC)
MAX. ARRAY CEC-AC POWER (W)	4873W AC (CEC)

AC VOLTAGE RISE CALCULATIONS

	DIST (FT)	COND.	VRISE(V)	VEND(V)	%VRISE	
VRISE SEC. 1 (MICRO TO JBOX) *	28.8	12 Cu.	1.8	241.8	0.76%	
VRISE SEC. 2 (JBOX TO COMBINER BOX)	76	10 Cu.	2.9	242.9	1.20%	
VRISE SEC. 3 (COMBINER BOX TO POI)	10	10 Cu.	0.4	240.4	0.16%	
TOTAL VRISE			5.1	245.1	2.11%	OK

* 8 MICROINVERTER MAX SUB-BRANCH CIRCUIT SIZE TO COMPLY WITH VRISE CALCULATIONS.

RACEWAY / CONDUCTOR CALCULATIONS

MICROINV. TO JUNCTION BOX (1)

MAX INVERTER OUTPUT CIRCUIT CURRENT = 15.7 A AC
CONDUCTOR SIZE / INSULATION / TYPE = 12 AWG 2C, TC-ER, CU.
CONDUCTOR AMP. RATING @ 90°C = 30 A

PER NEC 690.8(B)(1)(W/OUT CORRECTION FACTORS)
MAX INVERTER OUTPUT CURRENT X125%= 20.0 A AC

PER NEC 690.8(B)(2)(WITH CORRECTION FACTORS)
AMB. TEMP. AMP. CORRECTION = 0.91
OF CONDUCTORS IN RACEWAY CORRECTION = 1.0
ADJUSTED CONDUCTOR AMPACITY (A) = 27.3 A AC

LARGER AMPACITY OF 690.8(B)(1) OR (B)(2) = 20.0 < 27.3
(B)(1) - W/OUT CORRECTION FACTORS
LARGER AMPACITY COMPLIANCE = 30.0 > 20.0 OK

RACEWAY SIZE / TYPE = 3/4 IN. EMT OR NO RACEWAY
CONDUCTOR(S) / CABLE(S) CROSS-SECTION AREA (IN.^2) = 0.142 IN.2
CROSS-SECTIONAL AREA OF RACEWAY(IN.^2) = 0.533 IN.2
% ALLOWABLE RACEWAY FILL (NEC CH. 9, TBL 1) = 53% > 27% OK

JUNCTION BOX TO JUNCTION BOX (2)

MAX INVERTER OUTPUT CIRCUIT CURRENT = 15.7 A AC
CONDUCTOR SIZE / INSULATION / TYPE = 10 AWG 2C, NM-B W/G, CU.
CONDUCTOR AMP. RATING @60°C = 30 A

PER NEC 690.8(B)(1)(W/OUT CORRECTION FACTORS)
MAX INVERTER OUTPUT CURRENT X125%= 20.0 A AC

PER NEC 690.8(B)(2)(WITH CORRECTION FACTORS)
AMB. TEMP. AMP. CORRECTION = 0.82
OF CONDUCTORS IN RACEWAY CORRECTION = 1.0
ADJUSTED CONDUCTOR AMPACITY (A) = 24.6 A AC

LARGER AMPACITY OF 690.8(B)(1) OR (B)(2) = 20.0 < 24.6
(B)(1) - W/OUT CORRECTION FACTORS
LARGER AMPACITY COMPLIANCE = 30.0 > 20.0 OK

RACEWAY SIZE / TYPE = NO RACEWAY

JUNCTION BOX TO COMBINER BOX (3)

MAX INVERTER OUTPUT CIRCUIT CURRENT = 15.7 A AC
CONDUCTOR SIZE / INSULATION / TYPE = 10 AWG THHN / THWN-2, CU.
CONDUCTOR AMP. RATING @75°C = 30 A

PER NEC 690.8(B)(1)(W/OUT CORRECTION FACTORS)
MAX INVERTER OUTPUT CURRENT X125%= 20.0 A AC

PER NEC 690.8(B)(2)(WITH CORRECTION FACTORS)
AMB. TEMP. AMP. CORRECTION = 0.88
OF CONDUCTORS IN RACEWAY CORRECTION = 1.0
ADJUSTED CONDUCTOR AMPACITY (A) = 26.4 A AC

LARGER AMPACITY OF 690.8(B)(1) OR (B)(2) = 20.0 < 26.4
(B)(1) - W/OUT CORRECTION FACTORS
LARGER AMPACITY COMPLIANCE = 30.0 > 20.0 OK

RACEWAY SIZE / TYPE = 3/4 IN. EMT
CONDUCTOR(S) / CABLE(S) CROSS-SECTION AREA (IN.^2) = 0.063 IN.^2
CROSS-SECTIONAL AREA OF RACEWAY(IN.^2) = 0.533 IN.^2
% ALLOWABLE RACEWAY FILL (NEC CH. 9, TBL 1) = 40% > 12% OK

COMBINER BOX TO MAIN PV OCPD (10)

COMBINED INVERTER CONTINUOUS OUTPUT CURRENT = 15.7 A AC
CONDUCTOR SIZE / INSULATION / TYPE = 10 AWG THHN / THWN-2, CU.
CONDUCTOR AMP. RATING @75°C = 35 A

PER NEC 690.8(B)(1)(W/OUT CORRECTION FACTORS)
MAX COMBINED INVERTER CONTINUOUS OUTPUT CURRENT X125% = 20.0 A AC

PER NEC 690.8(B)(2)(WITH CORRECTION FACTORS)
AMB. TEMP. AMP. CORRECTION = 0.88
OF CONDUCTORS IN RACEWAY CORRECTION = 1.0
ADJUSTED CONDUCTOR AMPACITY (A) = 30.8 A AC

LARGER AMPACITY OF 690.8(B)(1) OR (B)(2) = 20.0 < 30.8
(B)(1) - W/OUT CORRECTION FACTORS
LARGER AMPACITY COMPLIANCE = 35.0 > 20.0 OK

RACEWAY SIZE / TYPE = 3/4 IN. EMT
CONDUCTOR(S) / CABLE(S) CROSS-SECTION AREA (IN.^2) = 0.084 IN.^2
CROSS-SECTIONAL AREA OF RACEWAY(IN.^2) = 0.533 IN.^2
% ALLOWABLE RACEWAY FILL (NEC CH. 9, TBL 1) = 40% > 16% OK

ION

CONFIDENTIAL - THE INFORMATION HEREIN CONTAINED SHALL NOT BE USED FOR THE BENEFIT OF ANYONE EXCEPT ION DEVELOPER, LLC NOR SHALL IT BE DISCLOSED IN WHOLE OR IN PART TO OTHERS OUTSIDE RECIPIENTS ORGANIZATION, EXCEPT IN CONNECTION WITH THE SALE AND USE OF THE RESPECTIVE EQUIPMENT, WITHOUT THE WRITTEN PERMISSION OF ION DEVELOPER, LLC.

NABCEP BOARD CERTIFIED
PV INSTALLATION PROFESSIONAL
SCOTT A. GURNEY
#PV-011719-01586
EXP. 3-17-2025

ION DEVELOPER, LLC
44 E 800 N OREM, UT 84057
888.781.7074

DAVID STANLEY CONRAD
C - ELECTRICAL CONTRACTOR
C1524

SITE INFORMATION:
PHILIP E BLECK
3232 SOUTHEAST 162ND AVENUE
PORTLAND, OREGON 97236

(13) SILFAB SOLAR SIL-420 HC+
(13) ENPHASE IQ8PLUS-72-2-US
5.46KW DC, 3.77KW STC-AC,
4.873KW CEC-AC

DRAWING BY: AILA DIMATATAC
DATE: 08-Nov-2023
PROJECT ID: 00BF71
SHEET NAME: ELECTRICAL CALCS.
SHEET NUMBER: E-7
REVISON: 0

ELECTRICAL FIELD-APPLIED HAZARD MARKINGS

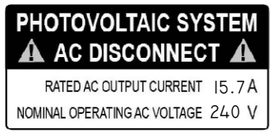

A — AT EACH PV SYSTEM DISCONNECTING MEANS. [NEC 690.54, NEC 690.13(B)]

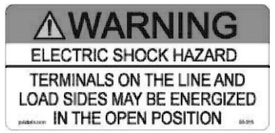

B — FOR PV DISCONNECTING MEANS WHERE ALL TERMINALS OF THE DISCONNECTING MEANS MAY BE ENERGIZED IN THE OPEN POSITION. [NEC 690.13(B), NEC 705.22]

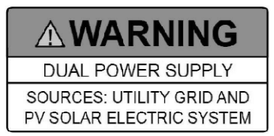

C — AT EQUIPMENT CONTAINING OVERCURRENT DEVICES IN CIRCUTS SUPPLYING POWER TO A BUSBAR OR CONDUCTOR SUPPLIED FROM MULTIPLE SOURCES. [NEC 705.12(C)]

D — PLACED ADJACENT TO PV SYSTEM PLUG-IN TYPE BREAKER TO A BUSBAR FOR A LOAD SIDE CONNECTION. [NEC 705.12(B)(3)(2)]

F — SIGN LOCATED ON OR NO MORE THAN 3 FT FROM THE RAPID SHUT DOWN DISCONNECT SWITCH(S). IF MORE THAN ONE PV RSD IS IN AN ENCLOSURE, EACH SHALL BE LABELED. [NEC 690.56(C), NEC 690.12(C)]

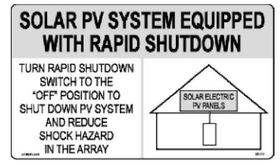

G — FOR BUILDINGS WITH PV SYSTEMS. TO BE LOCATED AT EACH SERVICE EQUIPMENT LOCATION TO WHICH THE PV SYSTEM IS CONNECTED. [NEC 690.56(C)]

J — PERMANENT DIRECTORY TO BE LOCATED AT MAIN SERVICE EQUIPMENT DENOTING THE LOCATION OF THE PV RAPID SHUTDOWN SYSTEM DISCONNECTING MEANS IF SOLAR ARRAY RAPID SHUT DOWN DISCONNECT SWITCH IS NOT GROUPED AND WITHIN LINE OF SITE OF MAIN SERVICE DISCONNECTING MEANS. [NEC 705.10, NEC 690.56(C)(1)]

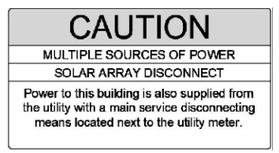

I — PERMANENT DIRECTORY TO BE LOCATED AT SOLAR ARRAY RAPID SHUTDOWN SWITCH DENOTING THE LOCATION OF THE SERVICE EQUIPMENT LOCATION IF SOLAR ARRAY RAPID SHUT DOWN DISCONNECT SWITCH IS NOT GROUPED AND WITHIN LINE OF SITE OF MAIN SERVICE DISCONNECTING MEANS. [NEC 705.10]

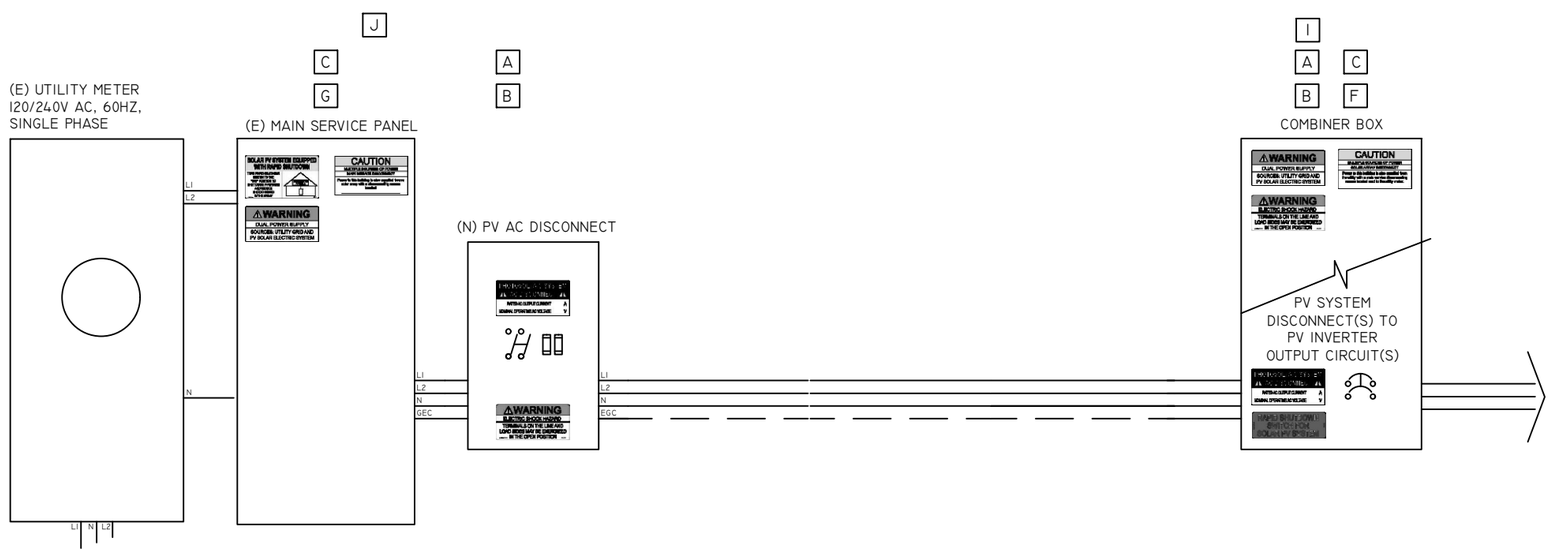

ALL CAUTION, WARNING, OR DANGER SIGNS OR LABELS SHALL:

1. COMPLY WITH ANSI Z535.4-2011 STANDARDS.
2. BE PERMANENTLY AFFIXED TO THE EQUIPMENT OR WIRING METHOD AND SHALL NOT BE HANDWRITTEN.
3. SHALL BE OF SUFFICEINT DURABILITY TO WITHSTAND THE ENVIRONMENT INVOLVED.
4. UNLESS OTHERS SPECIFIED MINIMUM TEXT HEIGHT TO BE $\frac{1}{8}$" (3MM).

ION

CONFIDENTIAL - THE INFORMATION HEREIN CONTAINED SHALL NOT BE USED FOR THE BENEFIT OF ANYONE EXCEPT ION DEVELOPER, LLC NOR SHALL IT BE DISCLOSED IN WHOLE OR IN PART TO OTHERS OUTSIDE RECIPIENTS ORGANIZATION, EXCEPT IN CONNECTION WITH THE SALE AND USE OF THE RESPECTIVE EQUIPMENT, WITHOUT THE WRITTEN PERMISSION OF ION DEVELOPER, LLC.

NABCEP BOARD CERTIFIED
PV INSTALLATION PROFESSIONAL
SCOTT A. GURNEY
#PV-0137719-01586
EXP. 3-17-2025

ION DEVELOPER, LLC

44 E 800 N OREM, UT 84057
888.781.7074

DAVID STANLEY CONRAD
C - ELECTRICAL CONTRACTOR
C1524

SITE INFORMATION:
PHILIP E BLECK
3232 SOUTHEAST 162ND AVENUE
PORTLAND, OREGON 97236

(13) SILFAB SOLAR SIL-420 HC+
(13) ENPHASE IQ8PLUS-72-2-US
5.46KW DC, 3.77KW STC-AC,
4.873KW CEC-AC

DRAWING BY
AILA DIMATATAC

DATE
08-Nov-2023

PROJECT ID
00BF71

SHEET NAME
ELECTRICAL LABELS

SHEET NUMBER
E-9

REVISON
0