2

CITY OF PORTLAND, OREGON - BUREAU OF DEVELOPMENT SERVICES

1900 SW Fourth Avenue, Suite 5000 • Portland, Oregon 97201 • www.portlandonline.com/bds • Fax 503-823-7425

Facility Permit Plan Intake Form

FOR INTAKE, STAFF USE ONLY

Date Received 5-29-19

Building Registration #

Fixed Bid

Bin # FF4

Building Permit # 17-251204 REV 01 FA

Mechanical #

Plumbing Permit #

Electrical Permit #

Building/Mechanical JEFF D 2

Electrical

Plumbing

Fire TODD B 3

Planning

BES

PDOT

Structural DAVID T 1

Other

5/31

APPLICANT: Complete all sections below that apply to the project. Please print legibly.

Print Name Damaris Luce Sign Name

Street Address 740 N knott st

City Portland State Oregon Zip Code 97227

Day Phone 503.288.9393 FAX email dluce@streimer.com

Plans / permits available for pick up at 1900 SW 4th Avenue, 2nd floor between 8:00 am to 5:00 pm

Contact Name for plan/permit pick up Damaris Luce

Day Phone 503.288.9393 email dluce@streimer.com

Project Building Name / # Portland Building

Project Address or Location 1134 SW 5th Ave, Portland, OR 97204

Project Name and Description Portland Building Terracotta, ~~[illegible]~~ sealant lab study/Testing

Total Project Value Project Reference #/Billing ID #

Building Contractor CCB #

MechanicalContractor Streimer Sheet Metal Works CCB # 2365

Electrical Contractor CCB# License #

Plumbing Contractor CCB# License #

☐ **Building Permit**

No. of Stories

Const. Type

Alarms Required

Smoke Det. Req'd

Sprinklers Req'd

Struct. Eng / Calcs Submitted

☐ **Mechanical Permit**

Mechanical Valuation

Description

☐ **Electrical Permit**

Please provide a completed standard electrical permit application form. You may mail or deliver it to 1900 SW 4th Avenue, Portland, Oregon 97201 or FAX to 503-823-7425.

☐ **Plumbing Permit**

Number of Fixtures

Back Flow Devices

Water Service (# of Feet)

Medical Gas

Other

City of Portland
REVIEWED FOR CODE COMPLIANCE
JUN 07 2019
17-251204 REV 01 FA
Permit Number

17-251204 REV 01 FA

FF4

Structural Special Inspection and Observation Program Checksheet

The registered design professional in responsible charge shall prepare and submit a special inspection and structural observation program in accordance with IBC Sections 1704.1.1, 1705.2, and 106.3.4.1, and confirm that the special inspection and structural observations noted below are indicated on the drawings.

~ Please Note that separate Soils and Life Safety Inspection Checksheets may also be required ~

Instructions – Parts D and E of this Checksheet must be fully completed by the Owner (or Architect or Engineer acting as the owner's agent) in order to obtain your permit.
When complete, return this form to BDS Permitting Services. You may return it in person at 1900 SW 4th Ave, by fax to (503) 823-4172, or by email to specialinspectionsforms@portlandoregon.gov

Application # 17-251284-DFS-05-FA **Date:** MAY 28, 2019
Project Name: BW-DFS Terra Cotta:Enclosure 4099499:Portland Bld:Downtown
Site Address: 1120 SW 5TH AVE
Architect of Record (Firm) _____ **Phone #** _____
Engineer of Record (Firm) _____ **Phone #** _____

The following special inspections and structural observations shall be performed according to the State Building Code and City of Portland Special Inspection Program Administrative Rules unless a program of inspections is submitted by the Engineer of Record and approved by Bureau of Development Services.

A. REQUIRED SPECIAL INSPECTIONS FOR ALL BUILDING TYPES

- [ ] Steel Construction
- [ ] Concrete Construction
- [ ] Anchors – Adhesive
- [ ] Wood Construction
- [ ] Curtainwall
- [ ] Prestressed Concrete
- [ ] Anchors – Cast-in-place
- [ ] Masonry
- [X] Structural Silicone Glazing
- [ ] Shotcrete
- [X] Anchors – Expansion/Screw
- [ ] Cold Formed Steel Framing

B. REQUIRED SPECIAL INSPECTIONS FOR CATEGORY III AND IV BUILDINGS (In addition to those noted above.)

- [ ] Seismic Force Resist. System
- [ ] Storage Racks
- [ ] Access Floors
- [ ] Suspended Ceilings
- [ ] Mechanical Components
- [ ] Electrical Components
- [ ] Cladding
- [ ] Veneer
- [ ] Nonbearing Walls
- [ ] Seismic Isolation System

C. STRUCTURAL OBSERVATION

- [X] Required (The stages of construction at which structural observation is to occur shall be indicated on the drawings.)

D. APPROVED SPECIAL INSPECTOR OR INSPECTION AGENCY (To be completed by the applicant.)
Indicate the City approved special inspector or special inspection agency to perform the required special inspections noted in parts A. and B. above:

- [ ] ACS (503) 443-3799
- [ ] KE & Associates (503) 853-9033
- [ ] PSI (503) 289-1778
- [ ] Carlson Testing (503) 684-3460
- [ ] KPFF SIG (503) 227-3251
- [ ] Other:
- [ ] Clair Company (541) 758-1302
- [ ] Materials Testing/Insp (208) 376-4748
- [ ] Columbia West Eng (360) 823-2900
- [X] Mayes Testing, Inc. (503) 281-7515
- [ ] FEI Testing (541) 757-4698
- [ ] Northwest Geotech (503) 682-1880

E. To be completed by the applicant.
By completing Part E the project owner (or the Architect or Engineer acting as the Owner's Agent) hereby agrees to employ the special inspector or inspection agency and/or engineer of record for the above noted special inspections and/or structural observations. (***Contractors are NOT authorized to agree for the Owner.***)

The project owner shall provide a copy of this checksheet to the special inspection agency and engineer of record.

Print Name MIRO RADOYNOVSKI Date 5/28/2019
(Project Owner or the Architect or Engineer acting as the Owner's Agent)
Firm DAJ CPM Phone _____

APPLICANT – COMPLETE PARTS D & E

SCAN

2

DCI ENGINEERS
www.dci-engineers.com
Washington
Oregon
California
Texas
Alaska
Colorado
Montana

May 23, 2019

Streimer Sheet Metal Works, Inc.
740 N Knott St
Portland, OR 97227

ATTN: Jacob Dorfler
Re: Portland Building Terracotta Tile Panel Sealant Load Testing

Dear Mr. Dorfler:
We've reviewed "Terracotta Tile Panel Sealant Load Testing Report" (Report #: 82191102.0003) dated 05/16/2019 provided by Mayes Testing Engineers.

We also reviewed the "Performance Test Report" by Architectural Testing Inc., Intertek company ("Intertek-ATI") dated 01/11/2018. This report provides the product description, test procedures, and test results to evaluate the DOWSIL 795 in accordance with ASTM C1184.

The results of both tests are described below:

Mayes Testing - Bond Strength Results:

Per Mayes testing report, the average load resisted by the ½" length DOWSIL 795 sealant installed into the full depth of the kerf of terracotta panels is 71.9 lbs. with a standard deviation of 12.2 lbs. These tests yield an average ultimate bond strength of 100 psi.

Architectural Testing - Environmental Results:

Based on the environmental performance test report, tests were performed to evaluate the heat aging per ASTM C792, Tensile Adhesion (Bond strength per ASTM C1135 over various environmental conditions. Per heat aging testing the % weight loss is 1.897%. Per testing results of tensile adhesion under 5000 hours (> 28 weeks) of UV light exposure, the average bond strength is 78 psi.

Conclusions:

The DOWSIL 795 sealant is acceptable product to use in the kerfs of terracotta panels to prevent horizontal movement during a seismic event.

The environmental tests reduce the bond strength of DOWSIL 795 sealant and DCI revised our calculations, using the lower bond strength to determine the proper length of the sealant in the kerf joint. With a factor of safety of 2.5, DCI recommends filling the kerfs of terracotta

17-251284 REV 01 FA

panels with at least ¾" long DOWSIL 795 sealant. Provide a minimum gap of ¾" at the kerf between the sealant and stone anchor bracket.

Calculations:

DOWSIL 795 Sealant Length in the Kerf Determination:

Average tensile bond strength after 5000 hrs of UV Light Exposure =	78 psi
Length of Kerf in contact with the sealant = 0.625 x 2 + 3/16 =	1.44 in
for 1 in length, Area of the kerf =	1.44 sq .in

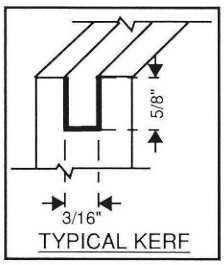

Capacity of the sealant per inch

P_n= Kerf area in contact with sealant x tensile capacity

P_n= 112.13 lbs

Assuming Factor of safety of 2.5

Capacity of the sealant per inch =	44.85 lbs	
Demand =	27.00 lbs	Seismic in-plane force
Length Required =	0.60 in	

Provide 3/4" long DOWSIL 795 sealant in the kerf of Terracotta panels

Please call with questions.

Sincerely,
DCI Engineers

EXPIRES: 6-30-20

Wade Younie, SE

Enclosed:

1. Terracotta Tile Panel Sealant Load Testing Report by Mayes Testing Engineers
2. Performance Test Report by Architectural Testing Inc
3. Permit Calculation page A-4: Seismic Fp

DRAWING LEGEND

MARK	DESCRIPTION	MARK	DESCRIPTION
F2.0	FOOTING SYMBOL (REFER TO SPREAD FOOTING SCHEDULE)		INDICATES WIDE FLANGE COLUMN
P1	PILE CAP SYMBOL (REFER TO PILE CAP SCHEDULE)		INDICATES HOLLOW STRUCTURAL SECTION (HSS) COLUMN OR TUBE STEEL (TS) COLUMN
A	TILT-UP/PRECAST CONCRETE WALL CONNECTION SYMBOL (REFER TO CONNECTION DETAIL)		INDICATES HOLLOW STRUCTURAL SECTION (HSS) COLUMN OR STEEL PIPE COLUMN
WB	SHEAR WALL SYMBOL (REFER TO SHEAR WALL SCHEDULE)		INDICATES WOOD POST
1	REVISION TRIANGLE		INDICATES BUNDLED STUDS
1	TILT-UP/PRECAST CONCRETE WALL PANEL NUMBER (REFER TO TILT-UP/ PRECAST CONCRETE WALL ELEVATIONS)		INDICATES CONCRETE COLUMN
1	CMU WALL REINFORCING SYMBOL (REFER TO CMU WALL REINFORCING SCHEDULE)		INDICATES PRECAST CONCRETE COLUMN
8"	CONTINUITY PLATE LENGTH (REFER TO TYPICAL DETAIL)		INDICATES MOMENT FRAME CONNECTION
DS	INDICATES DOUBLE SHEAR CONNECTION (REFER TO THE DOUBLE SHEAR PLATE CONNECTIONS DETAIL)		INDICATES DRAG CONNECTION
SR	INDICATES NUMBER OF STUD RAIL REQUIRED AT COLUMN (REFER TO STUD RAIL DETAILS)		INDICATES WOOD OR STEEL STUD WALL
1	ROOF/FLOOR DIAPHRAGM NAILING SYMBOL (REFER TO DIAPHRAGM NAILING SCHEDULE)		INDICATES MASONRY/CMU WALL
C1	STEEL COLUMN SYMBOL (REFER TO STEEL COLUMN SCHEDULE)		INDICATES CONCRETE/TILT-UP CONCRETE WALL
T/SLAB X'-X"	ELEVATION SYMBOL (T/ REFERS TO COMPONENT THAT THE ELEVATION REFERENCES)		INDICATES WOOD OR STEEL STUD SHEAR WALL
3	STUD BUBBLE (INDICATES NUMBER OF STUDS REQUIRED IF EXCEEDS NUMBER SPECIFIED IN PLAN NOTE)		INDICATES BEARING WALL BELOW
	INDICATES STEP IN FOOTING (REFER TO TYPICAL STEP IN FOOTING DETAIL)		INDICATES EXISTING WALL
X/SX.X	DETAILS OR SECTION CUT (DETAIL NUMBER/SHEET NUMBER)		POST-TENSION DEAD END (PLAN)
X SX.X	DETAILS OR SECTION CUT IN PLAN VIEW (DETAIL NUMBER/SHEET NUMBER)		POST-TENSION STRESSING END (PLAN)
X/SX.X	INDICATES LOCATION OF CONCRETE WALLS, SHEAR WALLS OR BRACED FRAME ELEVATIONS	3	POST-TENSION PROFILE (PLAN) (IN INCHES)
	SPAN INDICATOR (INDICATES EXTENTS OF FRAMING MEMBERS OR OTHER STRUCTURAL COMPONENTS)		INTERMEDIATE STRESSING (PLAN)
	INDICATES DIRECTION OF DECK SPAN		

ABBREVIATIONS

∠	Angle	FIN	Finish	PSI	Pounds Per Square Inch
AB	Anchor Bolt	FLR	Floor	PSL	Parallel Strand Lumber
ADDL	Additional	FRP	Fiberglass Reinforced Plastic	P-T	Post-Tensioned
ADH	Adhesive	FRT	Fire Retardant Treated	PT	Pressure Treated
ALT	Alternate	FTG	Footing	R	Radius
ARCH	Architectural	F/	Face of	RD	Roof Drain
B or BOT	Bottom	GA	Gage	REF	Refer/Reference
B/	Bottom Of	GALV	Galvanized	REINF	Reinforcing
BLDG	Building	GEOTECH	Geotechnical	REQD	Required
BLKG	Blocking	GL	Glue Laminated Timber	RET	Retaining
BMU	Brick Masonry Unit	GWB	Gypsum Wall Board	SCBF	Special Concentric Braced Frame
BP	Baseplate	HDR	Header	SCHED	Schedule
BRBF	Buckling Restrained Braced Frame	HF	Hem-fir	SFRS	Seismic Force-Resisting System
BRG	Bearing	HGR	Hanger	SHTHG	Sheathing
BTWN	Between	HD	Hold-down	SIM	Similar
℄	Centerline	HORIZ	Horizontal	SLBB	Short Leg Back-to-Back
C	Camber	HP	High Point	SMF	Special Moment Frame
CB	Castellated Beam	HSS	= TS (Hollow Structural Section)	SOG	Slab on Grade
C'BORE	Counterbore	IBC	International Building Code	SP	Southern Pine
CIP	Cast in Place	ID	Inside Diameter	SPEC	Specification
CJ	Construction or Control Joint	IE	Invert Elevation	SQ	Square
CJP	Complete Joint Penetration	IF	Inside Face	SR	Studrail
CLG	Ceiling	INT	Interior	SF	Square Foot
CLR	Clear	k	Kips	SST	Stainless Steel
CLT	Cross-Laminated Timber	KSF	Kips Per Square Foot	STAGG	Stagger/Staggered
CMU	Concrete Masonry Unit	LF	Lineal Foot	STD	Standard
COL	Column	LL	Live Load	STIFF	Stiffener
CONC	Concrete	LLBB	Long Leg Back-to-Back	STL	Steel
CONN	Connection	LLH	Long Leg Horizontal	STRUCT	Structural
CONST	Construction	LLV	Long Leg Vertical	SWWJ	Solid Web Wood Joist
CONT	Continuous	LP	Low Point	SYM	Symmetrical
C'SINK	Countersink	LONGIT	Longitudinal	T	Top
CTRD	Centered	LSL	Laminated Strand Lumber	T/	Top Of
ø	Diameter	LVL	Laminated Veneer Lumber	T&B	Top & Bottom
DB	Drop Beam	MAS	Masonry	TC AX LD	Top Chord Axial Load
DBA	Deformed Bar Anchor	MAX	Maximum	TCX	Top Chord Extension
DBL	Double	MECH	Mechanical	TDS	Tie Down System
DEMO	Demolish	MEZZ	Mezzanine	T&G	Tongue & Groove
DEV	Development	MFR	Manufacturer	THKND	Thickened
DF	Douglas Fir	MIN	Minimum	THRD	Threaded
DIAG	Diagonal	MISC	Miscellaneous	THRU	Through
DIST	Distributed	NIC	Not In Contract	TRANSV	Transverse
DL	Dead Load	NLT	Nail-Laminated Timber	TYP	Typical
DN	Down	NTS	Not To Scale	UBC	Uniform Building Code
DO	Ditto	OC	On Center	UNO	Unless Noted Otherwise
DP	Depth/Deep	OCBF	Ordinary Concentric Braced Frame	URM	Unreinforced Masonry Unit
DWG	Drawing	OD	Outside Diameter	VERT	Vertical
(E)	Existing	OF	Outside Face	W	Wide
EA	Each	OPNG	Opening	W/	With
EF	Each Face	OPP	Opposite	W/O	Without
EL	Elevation	OWSJ	Open Web Steel Joist	WHS	Welded Headed Stud
ELEC	Electrical	OWWJ	Open Web Wood Joist	WP	Working Point
ELEV	Elevator	PL	Plate	WWF	Welded Wire Fabric
EMBED	Embedment	PAF	Powder Actuated Fastener	±	Plus or Minus
EQ	Equal	PC	Precast		
EQUIP	Equipment	PERP	Perpendicular		
EW	Each Way	PLWD	Plywood		
EXP	Expansion	PP	Partial Penetration		
EXP JT	Expansion Joint	PREFAB	Prefabricated		
EXT	Exterior	PSF	Pounds per Square Foot		
FD	Floor Drain				
FDN	Foundation				

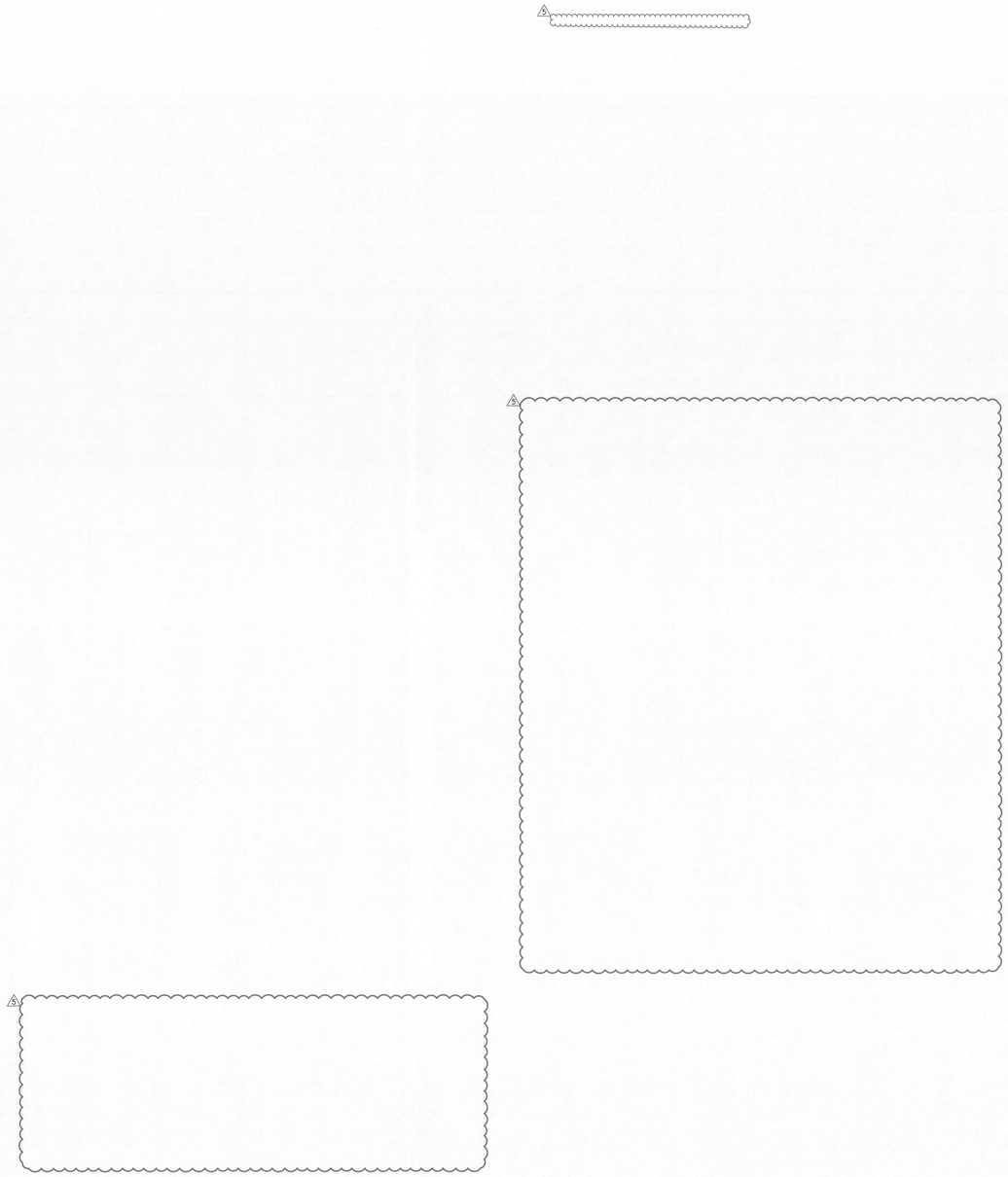

City of Portland
REVIEW PLAN CODE
COMPLIANCE
JUN 07 2019
17-251284 REV01 FA
Permit Number

PREPARED BY:

DCI ENGINEERS
921 SW Washington Street, Suite 560
Portland, Oregon 97205
P: (503) 243-3444
E: INFO@DCI-ENGINEERS.COM
W: WWW.DCI-ENGINEERS.COM

SIGNATURES:

REGISTERED STRUCTURAL PROFESSIONAL ENGINEER
12279
OREGON
WADE W. YOUNG
EXPIRES: 12-31-19

REVISIONS:

1	PLAN CHECK	12/05/2018
2	PLAN CHECK	01/21/2019
3	- NOT USED -	
4	PLAN CHECK	02/21/2019
5	REVISION 1	05/28/2019

APPROVALS:

Job No.:	18031-0058
Proj. Manager:	CM
Drawn:	AW
Reviewed:	WY
Dwg. Chk.	WY
Date:	08-31-2018
Scale:	AS NOTED

STREIMER
SHEET METAL WORKS, INC.
740 N KNOTT ST
PORTLAND, OR 97227

PROJECT TITLE:

PORTLAND BUILDING TERRACOTTA
1134 SW 5TH AVE
PORTLAND, OR 97204

17-251284 REV01 FA

FOR PERMIT

These drawings are sufficiently complete for submission to the jurisdiction having authority for permits. The Contractor shall not use these drawings for construction purposes until they are issued for construction by the Engineer of Record. Contractor shall verify all dimensions and conditions.

SHEET TITLE:
STRUCTURAL GENERAL NOTES, LEGEND & ABBREVIATIONS

SHEET NO.
S1.1

18031-0058 S1.dwg 28-May-19 1:56 PM Scale: 1:1

#4

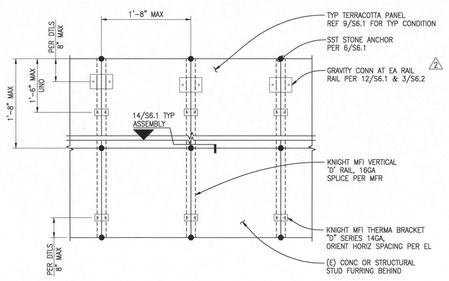

TYPICAL TERRACOTTA ELEVATION

SCALE: 1"=1'-0" (1)

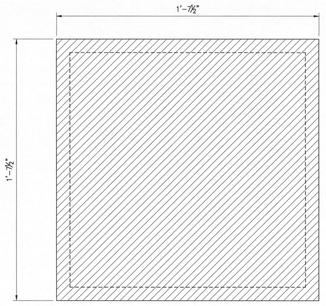

TYPICAL PANEL ELEVATION

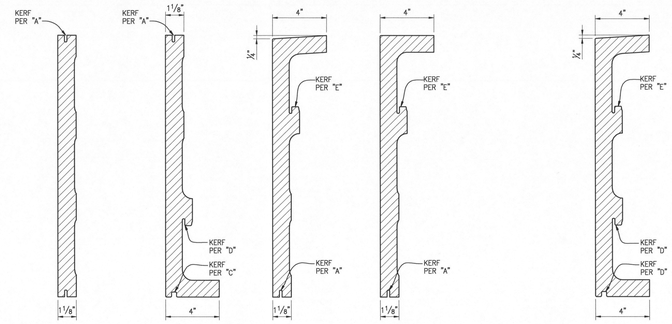

SECTION: TC1 ASHLAR UNIT | SECTION: TC2 HEAD UNIT | SECTION: TC3 SILL UNIT | SECTION: TC4-A JAMB UNIT | SECTION: TC5 SILL - HEAD UNIT

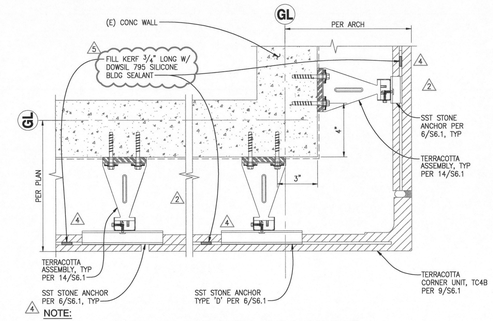

NOTE:
1. PROVIDE A GAP OF ¾" MIN AT THE KERF BETWEEN EPOXY AND STONE ANCHOR BRACKET.

PLAN - TERRACOTTA TYPICAL CORNER DETAIL - TC4B

REF 31/A10.10 — SCALE: 3"=1'-0" (5)

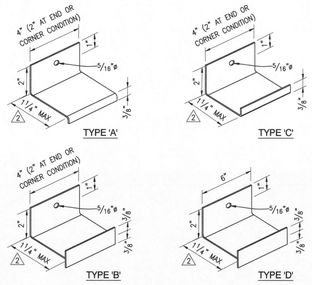

NOTE:
STAINLESS STEEL STONE ANCHORS TO BE SST BENT ℄⅛

STAINLESS STEEL STONE ANCHORS

SCALE: NONE (6)

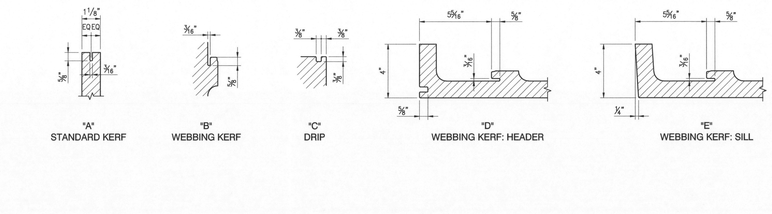

"A" STANDARD KERF | "B" WEBBING KERF | "C" DRIP | "D" WEBBING KERF: HEADER | "E" WEBBING KERF: SILL

PLAN: TC4-B CORNER UNIT

PLAN: TC6 JAMB - JAMB UNIT

TERRACOTTA CLADDING UNIT SHAPES

REF 51/A10.10 — SCALE: NONE (6)

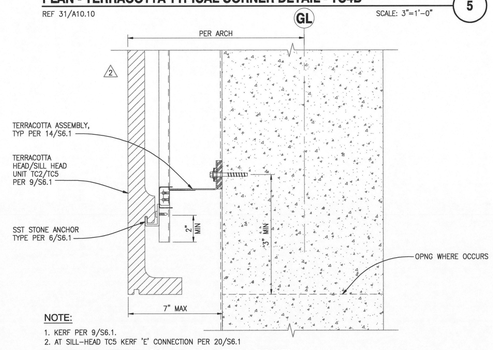

NOTE:
1. KERF PER 9/S6.1.
2. AT SILL-HEAD TC5 KERF 'E' CONNECTION PER 20/S6.1

SECTION - TERRACOTTA TO METAL PANEL HEAD TC2/SILL-HEAD TC5 CONDITION

REF 32/A10.10 — SCALE: 3"=1'-0" (10)

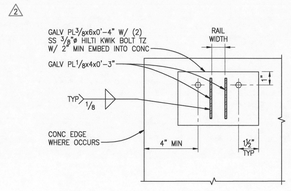

A-A

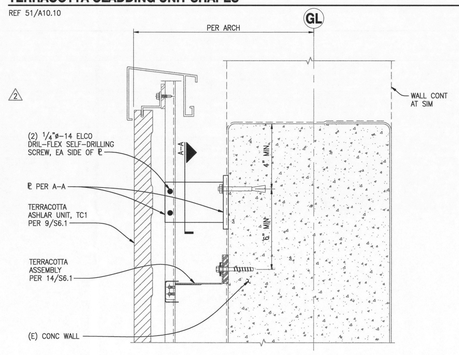

SECTION - PARAPET AT TERRACOTTA

REF 35/A10.10 & 21/S10.11 — SCALE: 3"=1'-0" (12)

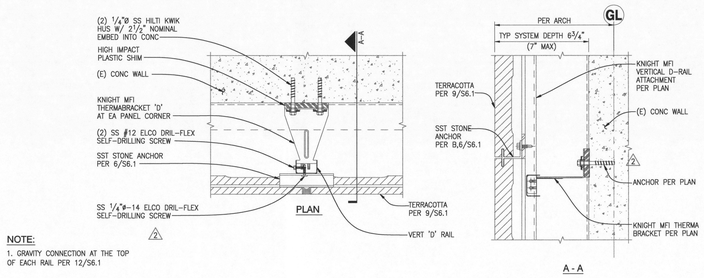

NOTE:
1. GRAVITY CONNECTION AT THE TOP OF EACH RAIL PER 12/S6.1

TYPICAL TERRACOTTA ASSEMBLY

REF 61/A10.10 — SCALE: 3"=1'-0" (14)

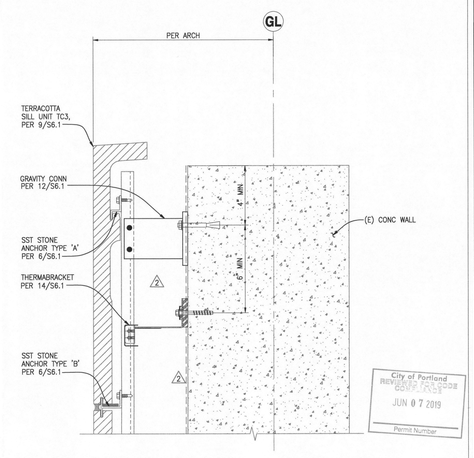

SECTION - WINDOW SILL TO TERRACOTTA - TC3

REF 55/A10.10 — SCALE: 3"=1'-0" (20)

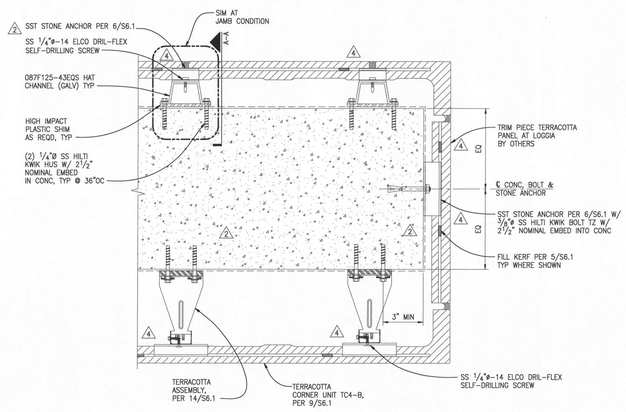

NOTE:
1. PROVIDE A GAP OF ¾" MIN AT THE KERF BETWEEN EPOXY AND STONE ANCHOR BRACKET.

PLAN - LOGGIA OPENING AT TERRACOTTA

REF 21/A10.10 — SCALE: 3"=1'-0" (22)

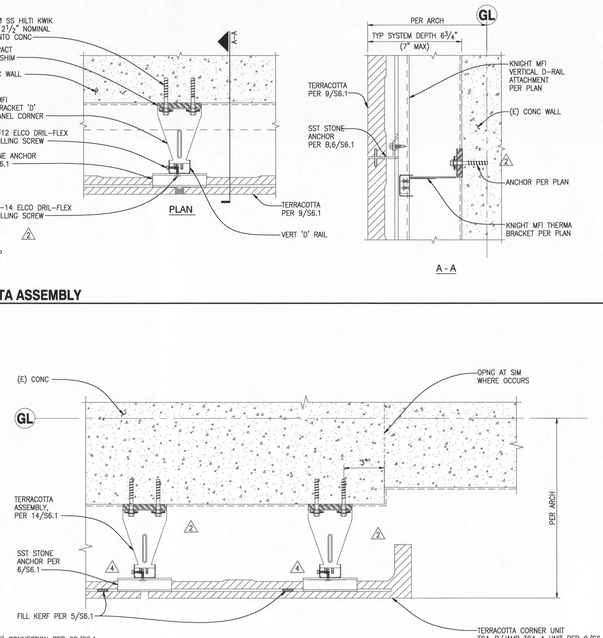

NOTE:
1. AT JAMB UNIT TC4-A AT KERF 'E' CONNECTION PER 20/S6.1.
2. PROVIDE A GAP OF ¾" MIN AT THE KERF BETWEEN EPOXY AND STONE ANCHOR BRACKET.

PLAN - TERRACOTTA AT METAL PANEL

REF 65/A10.10 & 51/A10.12 — SCALE: 3"=1'-0" (19)

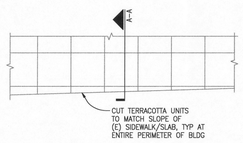

PARTIAL ELEVATION AT SIDEWALK
(NOT TO SCALE)

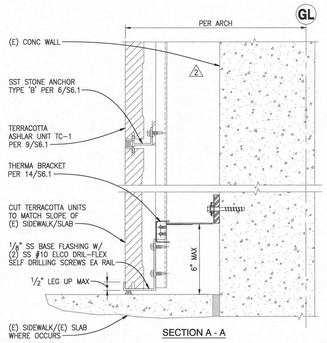

TYPICAL TERRACOTTA AT SIDEWALK/SLAB

REF 53/A10.10, 63/A10.10 — SCALE: 3"=1'-0" (23)

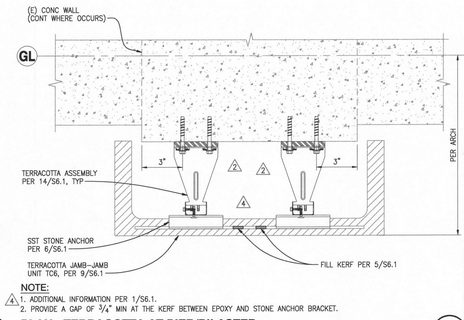

NOTE:
1. ADDITIONAL INFORMATION PER 1/S6.1.
2. PROVIDE A GAP OF ¾" MIN AT THE KERF BETWEEN EPOXY AND STONE ANCHOR BRACKET.

PLAN - TERRACOTTA AT PIER/PILASTER

REF 31/A10.10, 51/A10.10 — SCALE: 3"=1'-0" (24)

FOR PERMIT

PREPARED BY:
DCI ENGINEERS
921 SW Washington Street, Suite 560
Portland, Oregon 97205
Ph: (503) 222-3860 www.dciengineers.com
CIVIL / STRUCTURAL

SIGNATURE: REGISTERED STRUCTURAL PROFESSIONAL ENGINEER — OREGON — WADE M. WYSONG — EXPIRES: 6-30-20

REVISIONS:		
1	PLAN CHECK	12/05/2018
2	PLAN CHECK	01/21/2019
3	NOT USED	
4	PLAN CHECK	02/21/2019
5	REVISION 1	05/28/2019

APPROVALS:	
Job No.:	18031-0058
Proj. Manager:	GM
Drawn:	AW
Reviewed:	WY
Dwg. Chk.	WY
Date:	08-31-2018
Scale:	AS NOTED

STREIMER
SHEET METAL WORKS, INC.
740 N KNOTT ST
PORTLAND, OR 97227

PROJECT TITLE:
PORTLAND BUILDING TERRACOTTA
1134 SW 5TH AVE
PORTLAND, OR 97204

These drawings are sufficiently complete for submission to the jurisdiction having authority for permits. The Contractor shall not use these drawings for construction purposes until they have been issued by the jurisdiction having authority for permits.

SHEET TITLE:
STRUCTURAL DETAILS

SHEET NO.
S6.1

Plot Scale: 1 = 1

18031-0058 S61.dwg 28-May-19 1:10 PM Bob\Autocad25

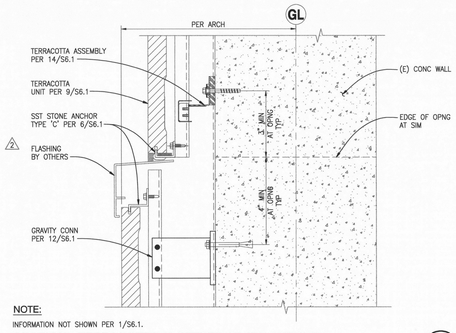

NOTE:
INFORMATION NOT SHOWN PER 1/S6.1.

SECTION - TERRACOTTA 2" OFFSET AT 4TH AVENUE

REF 64/A10.13 SCALE: 3"=1'-0" (1)

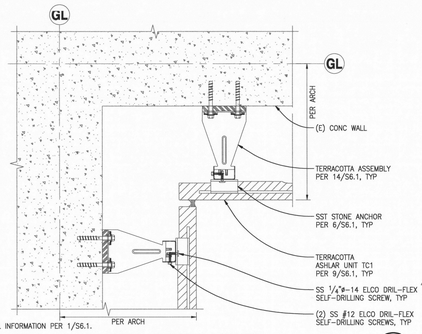

NOTE:
ADDITIONAL INFORMATION PER 1/S6.1.

PLAN - TYPICAL TERRACOTTA AT INSIDE CORNER

SCALE: 3"=1'-0" (2)

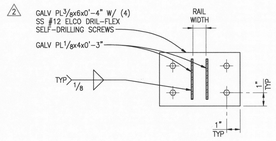

NOTE:
ADDITIONAL INFORMATION PER 1/S6.1.

SECTION - WINDOW SILL TO TERRACOTTA (LEVEL 03)

REF 45/A10.12 SCALE: 3"=1'-0" (3)

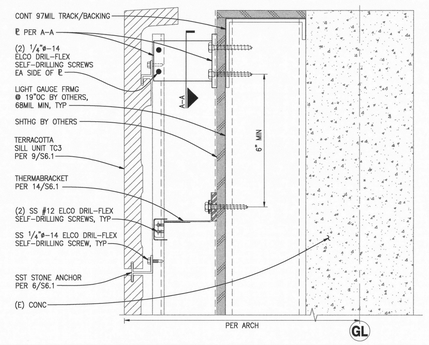

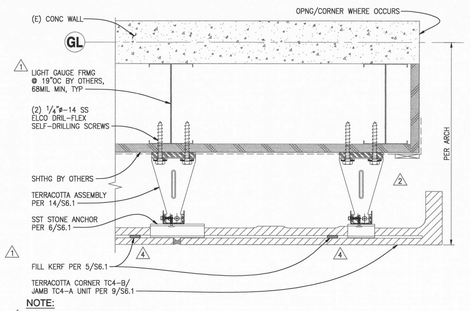

NOTE:
1. ADDITIONAL INFORMATION PER 1/S6.1.
2. PROVIDE A GAP OF 3/4" MIN AT THE KERF BETWEEN EPOXY AND STONE ANCHOR BRACKET.

PLAN - WINDOW JAMB TO TERRACOTTA (LEVEL 03)

REF 65/A10.12 SCALE: 3"=1'-0" (5)

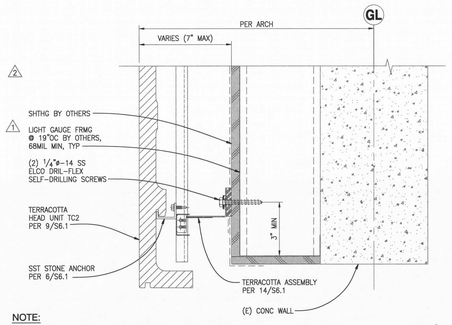

NOTE:
ADDITIONAL INFORMATION PER 1/S6.1.

SECTION - WINDOW HEAD TO TERRACOTTA (LEVEL 03)

REF 25/A10.12 SCALE: 3"=1'-0" (6)

PREPARED BY:
DCI
STRUCTURAL ENGINEERS
921 SW Washington Street, Suite 560
Portland, Oregon 97205
P: 503-242-3448
E: TIM@DCI-ENGINEERS.COM
WWW.DCI-ENGINEERS.COM

SIGNATURE:
REGISTERED STRUCTURAL PROFESSIONAL ENGINEER
OREGON
EXPIRES: 6-30-20

REVISIONS:

1	PLAN CHECK	12/05/2018
2	PLAN CHECK	01/21/2019
3	– NOT USED –	
4	PLAN CHECK	02/21/2019
5	REVISION 1	05/28/2019

APPROVALS:

Job No.:	18031-0058
Proj. Manager:	CM
Drawn:	AW
Reviewed:	WY
Dwg. Chk.	WY
Date:	08-31-2018
Scale:	AS NOTED

STREIMER
SHEET METAL WORKS, INC.
740 N KNOTT ST
PORTLAND, OR 97227

PROJECT TITLE:
PORTLAND BUILDING TERRACOTTA
1134 SW 5TH AVE
PORTLAND, OR 97204

SHEET TITLE:
STRUCTURAL DETAILS

SHEET NO. S6.2

FOR PERMIT
These drawings are sufficiently complete for submission to the jurisdiction having authority for permit. The Contractor shall not use these drawings for construction purposes until they are issued for construction by the Structural Engineer.

City of Portland
BUREAU OF DEVELOPMENT SERVICES
JUN 07 2019
Permit Number

18031-0058 S62.dwg 28-May-19 1:11 PM AcadJunior23

Plot Scale: 1 = 1