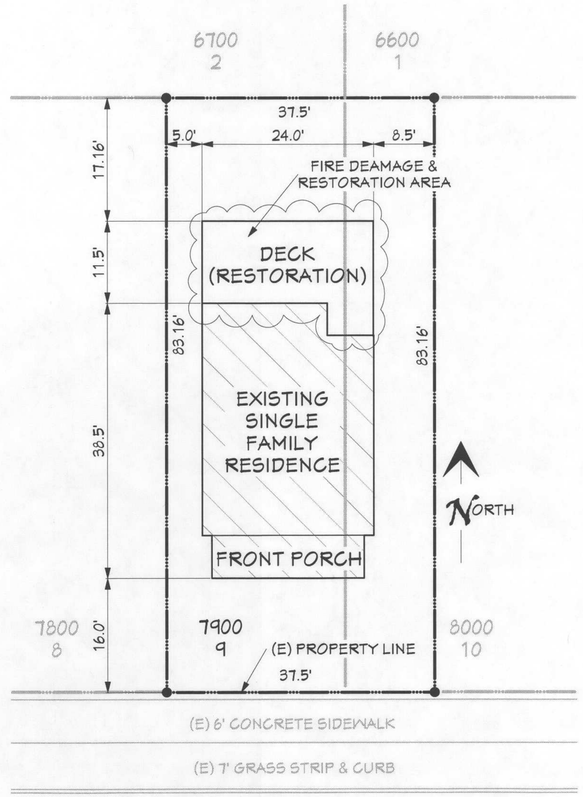

EXISTING & PROPOSED RESTORATION NOTES, DETAILS & SPECIFICATIONS FOR THE:

SITE PLAN

SCALE: 1" = 10.0'

PROJECT INFORMATION:

PROPERTY OWNER NAME:

RILEY RESIDENCE
27 NE COOK STREET
PORTLAND, OREGON 97212

CONTRACTOR INFORMATION:

FIRE INDUSTRY RESTORATION EXPERTS INC
20252 S. JASAN DRIVE CCB# 200128
PO BOX 2133
OREGON CITY, OREGON 97045
503-305-7285
GREG PHILO 503-317-3295 GREG@FIREXPERTS.COM

CONSTRUCTION DOCUMENTS PREPARED BY:

BENTHIN DESIGN GROUP LLC
PO BOX 42
BEAVERCREEK, OREGON 97004
503-632-2862 1-800-698-9144
scott@bendg.com
http://www.bendg.com

SITE INFORMATION:

PROPERTY ADDRESS:
27 NE COOK STREET
PORTLAND, OREGON 97212
MULTNOMAH COUNTY

PROJECT LEGAL DESCRIPTION:
WILLIAMS AVENUE ADDITION
BLOCK 7, E ½ OF LOT 9, W 12½' OF LOT 10
LOTS 9 AND 10

LAND-USE INFORMATION:

BUILDING DEPARTMENT JURISDICTION:
CITY: PORTLAND
COUNTY: MULTNOMAH COUNTY
STATE: OREGON USA

ZONING CATEGORY: R-2
ZONING OVERLAYS: a

GEOGRAPHIC INFORMATION:

BUILDING CODE REFERENCES:
2014 EDITION O.R.S.C.
OREGON RESIDENTIAL SPECIALTY CODE

BUILDING PLANNING: CHAPTER 3
SEISMIC/LATERAL SPECIFICATIONS
SEISMIC DESIGN CATEGORY: D1
WIND SPEED: 95 M.P.H.
EXPOSURE: B

G.P.S. COORDINATES:
N 45.546952°
W -122.665809°
SITE ELEVATION (APPROXIMATELY):
186' ABOVE SEA LEVEL

GENERAL INFORMATION:

BENTHIN DESIGN GROUP LLC HAVE PROVIDED CARE AND EFFORT TO ENSURE THAT THE DRAWINGS ARE ERROR FREE. THE GENERAL CONTRACTOR AND SUB-CONTRACTORS SHALL EXAMINE THE DAMAGES AND SCOPE OF THEIR REPAIRS AND THEN NOTIFY BENTHIN DESIGN GROUP LLC IN WRITING IF ANY DISCRETIONS ARE FOUND IN THESE DOCUMENTS BEFORE PROCEEDING WITH WORK.

WRITTEN DIMENSIONS WILL ALWAYS HAVE PRECEDENCE OVER OTHER SCALING METHODS. DO NOT SCALE DRAWINGS.

PROJECT DESCRIPTION:

PROJECT SUMMARY: EXISTING CONDITIONS
TYPE OF STRUCTURE: SINGLE FAMILY RESIDENCE
TYPE OF CONSTRUCTION: WOOD FRAMED
NUMBER OF STORIES: TWO STORY WITH BASEMENT
TYPE OF FOUNDATION: STANDARD CONCRETE FOUNDATION SYSTEM
YEAR BUILT: 1905
MAIN FLOOR AREA: 778 SQ. FT. (FINISHED)
UPPER FLOOR AREA: 672 SQ. FT. (FINISHED)
BASEMENT: 762 SQ. FT. (UNFINISHED)

DESCRIPTION:
PLANS AND SPECIFICATIONS FOR THE REPAIR OF THE FIRE, SMOKE AND WATER DAMAGE CAUSED BY A ORIGINATING AT THE REAR AREA OF THE HOUSE. THE DAMAGE INVOLVED THE ROOF STRUCTURE, REAR EXTERIOR WALLS AND READ DECK STRUCTURE. THE PROPOSED REPAIR MATERIALS AND WORKMANSHIP TO MATCH EXISTING STRUCTURE TO MATCH ORIGINAL PRE-LOSS CONDITION.

City of Portland
REVIEWED FOR CODE COMPLIANCE
APR 24 2017
Permit Number

General Notes & Supplemental Information
The attached 8 1/2 x 11 sheets are part of this plan approval. Plans are considered null and void without this information attached to the approved set of plans.

City of Portland
Bureau of Development Services
By [illegible] Date 4/21/17
Approved by
Planning and Zoning Review

REPAIR TO 'ORIGINAL' CONDITION

FIRE RESTORATION

BENTHIN DESIGN GROUP LLC
BDG
PO BOX 42
BEAVERCREEK, OREGON 97004
503-632-2862 1-800-698-9144
EMAIL: INFO@BENDG.COM
WEBSITE: WWW.BENDG.COM

PROJECT NAME:
RILEY

CONTRACTOR/OWNER NAME:
F.I.R.E.

PROJECT INFORMATION:
ADDRESS:
27 NE COOK STREET
PORTLAND, OREGON 97212
MULTNOMAH COUNTY

PROJECT DISCRIPTION:
FIRE RESTORATION
REPAIR TO 'ORIGINAL' CONDITION

PAGE TITLES:
COVERSHEET

- SITE PLAN
- PROJECT SUMMARY

PROJECT NUMBER:	2016 - 7226
ORIGINAL DATE:	JAN 2017
REVISION DATE:	
PAGE NUMBER:	1
REFERENCE NUMBER:	CS

17-126902-RS

ACTUAL PHOTOGRAPH OF THE:

REAR FACADE

SCALE: NTS - NOT TO SCALE

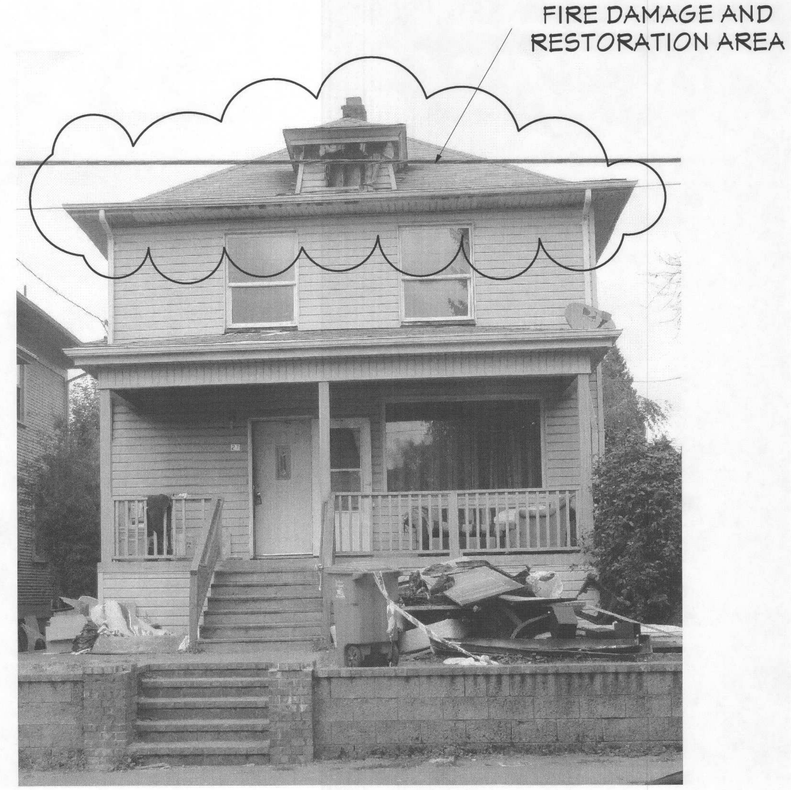

ACTUAL PHOTOGRAPH OF THE:

FRONT FACADE

SCALE: NTS - NOT TO SCALE

City of Portland
REVIEWED FOR CODE COMPLIANCE
APR 24 2017
Permit Number

BENTHIN DESIGN GROUP LLC
BDG
PO BOX 42
BEAVERCREEK, OREGON 97004
503-632-2862 1-800-698-9144
EMAIL: INFO@BENDG.COM
WEBSITE: WWW.BENDG.COM

PROJECT NAME:
RILEY

CONTRACTOR/OWNER NAME:
F.I.R.E.

PROJECT INFORMATION:

ADDRESS:
27 NE COOK STREET
PORTLAND, OREGON 97212
MULTNOMAH COUNTY

PROJECT DISCRIPTION:
FIRE RESTORATION:
REPAIR TO 'ORIGINAL' CONDITION

PAGE TITLES:
FACADES

- FRONT PHOTO
- REAR PHOTO

PROJECT NUMBER:	2016 - 7226
ORIGINAL DATE:	JAN 2017
REVISION DATE:	
PAGE NUMBER:	2
REFERENCE NUMBER:	2.0

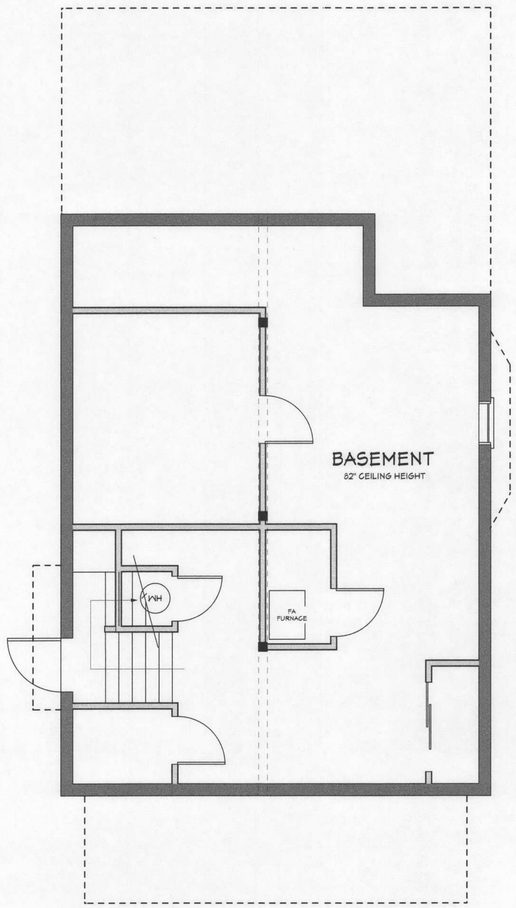

EXISTING NOTES, DETAILS & SPECIFICATIONS FOR THE:

BASEMENT FLOOR PLAN

SCALE: ¼" = 1'-0"

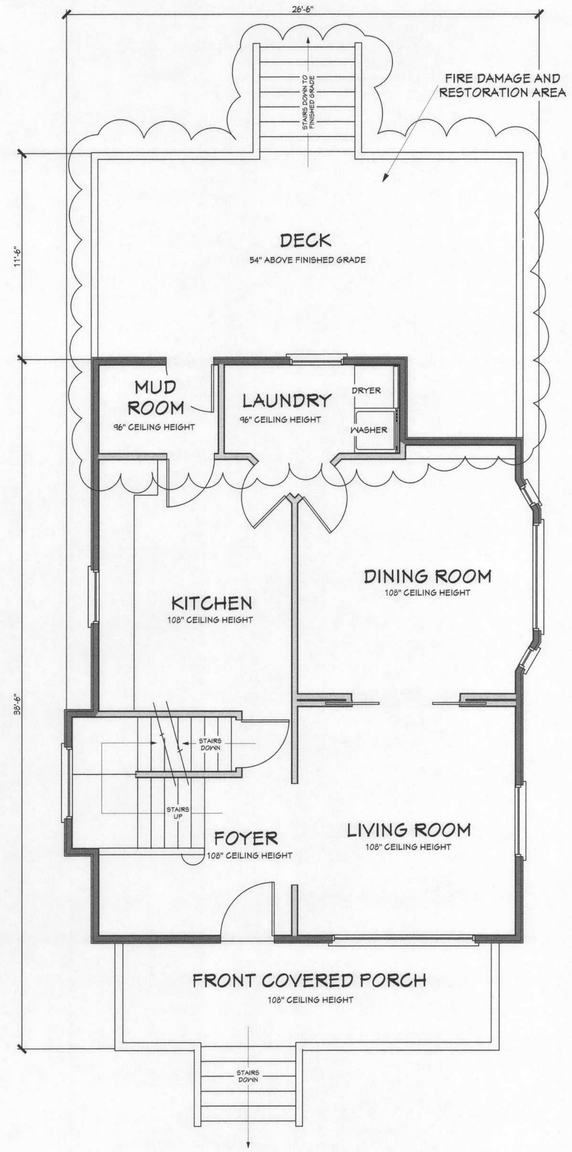

EXISTING NOTES, DETAILS & SPECIFICATIONS FOR THE:

MAIN FLOOR PLAN

SCALE: ¼" = 1'-0"

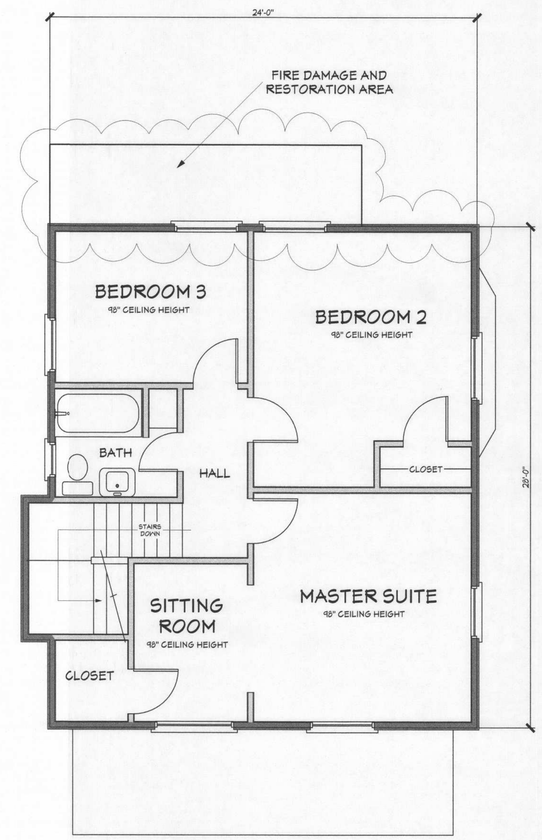

EXISTING NOTES, DETAILS & SPECIFICATIONS FOR THE:

UPPER FLOOR PLAN

SCALE: ¼" = 1'-0"

City of Portland
REVIEWED FOR CODE COMPLIANCE
APR 24 2017
Permit Number

BENTHIN DESIGN GROUP LLC
BDG
PO BOX 42
BEAVERCREEK, OREGON 97004
503-632-2862 1-800-698-9144
EMAIL: INFO@BENDG.COM
WEBSITE: WWW.BENDG.COM

PROJECT NAME:
RILEY

CONTRACTOR/OWNER NAME:
F.I.R.E.

PROJECT INFORMATION:

ADDRESS:
27 NE COOK STREET
PORTLAND, OREGON 97212
MULTNOMAH COUNTY

PROJECT DISCRIPTION:
FIRE RESTORATION:
REPAIR TO 'ORIGINAL' CONDITION

PAGE TITLES:
EXISTING

- BASEMENT FLOOR
- MAIN FLOOR
- UPPER FLOOR

PROJECT NUMBER:	2016 - 7226
ORIGINAL DATE:	JAN 2017
REVISION DATE:	3-25-2017
PAGE NUMBER:	3
REFERENCE NUMBER:	3.0

FLOOR FRAMING PLAN
NOTES AND SPECIFICATIONS:

DAMAGE AND RESTORATION LOCATIONS:

DEMO:
REMOVE ALL FIRE, SMOKE AND WATER DAMAGED MATERIALS.

FIRE DAMAGE:
MEMBERS OBSERVED TO HAVE STRUCTURAL FIRE DAMAGE ABOVE AND BEYOND SURFACE DISCOLORATION SHALL BE CLEANED AND SCRAPPED TO REMOVE CHARRED MATERIALS. IN ALL CASES, MEMBERS SHALL BE REPLACED TO MATCH EXISTING, UNDAMAGED SECTIONS WHERE SCRAPING OF CHARRED MATERIALS RESULTS IN REDUCED MEMBER SECTION OF MORE THAN 1/8" FOR 1x NOMINAL MEMBERS AND 1/4" FOR 2x AND LARGER NOMINAL MEMBER SIZES.

REPAIRS:
EXTERIOR:
ROOF STRUCTURE: REMOVE AND REPLACE DAMAGED ROOF STRUCTURE MEMBERS,
ROOF SHEATHING AND ROOFING.

EXTERIOR WALLS: REPAIR DAMAGED 2x4 WALL STUDS, WALL SHEATHING AND SIDING TO MATCH EXISTING STRUCTURE.

INTERIOR:
FIRE DAMAGE:
REMOVE AND REPLACE ALL FIRE DAMAGED MATERIALS AND REPLACE WITH LIKE MATERIALS. DAMAGED ROOF MEMBERS TO BE REMOVED AND REPLACED WITH ROOF TRUSSES.

SMOKE AND WATER DAMAGE:
REPLACE ALL DAMAGED MATERIALS AND REPLACE TO MATCH (E) STRUCTURE.

INTERIOR FINISH:
REMOVE ALL DAMAGED LATH AND PLASTER AT WALL AND CEILINGS. REPLACE WITH 1/2" SHEETROCK AND TAPE.

WALL AND CEILING INSULATION:
REMOVE DAMAGE WALL AND CEILING INSULATION AND REPLACE WITH INSULATION VALUES AND NOTED IN THE ENERGY SCHEDULE.

REAR DECK AND STAIRWAY:
REAR DECK TO MATCH EXISTING DECK STRUCTURE.
SEE DECK DETAILS ON PAGES 7 AND 8 ATTACHED.

FRAMING:
MATERIALS:
LUMBER:
WALLS: STUD GRADE OR BETTER
FLOOR JOIST: DF/HF #2 OR BETTER
EXTERIOR MATERIALS:
ALL EXTERIOR WOOD MATERIALS TO BE PRESSURE TREATED, CEDAR OR CERTIFIED OUTDOOR WOOD.

ALL METAL BRACKETS AND HANGERS IN DIRECT CONTACT WITH PRESSURE TREATED WOOD MEMBERS TO BE COATED WITH "HOT DIPPED" GALVANIZED.

ELECTRICAL:
SMOKE/CARBON DIOXIDE DETECTORS:
PROVIDE SMOKE DETECTORS AT EACH SLEEPING ROOM AND ADJACENT LIVING AREA. DETECTORS MUST HAVE BATTERY BACKUP AND BE INTERCONNECTED TO OTHER DETECTORS.

RESTORATION SCHEDULE:
(E) EXISTING STRUCTURE OR OBJECT
(N) NEW/PROPOSED STRUCTURE OR OBJECT

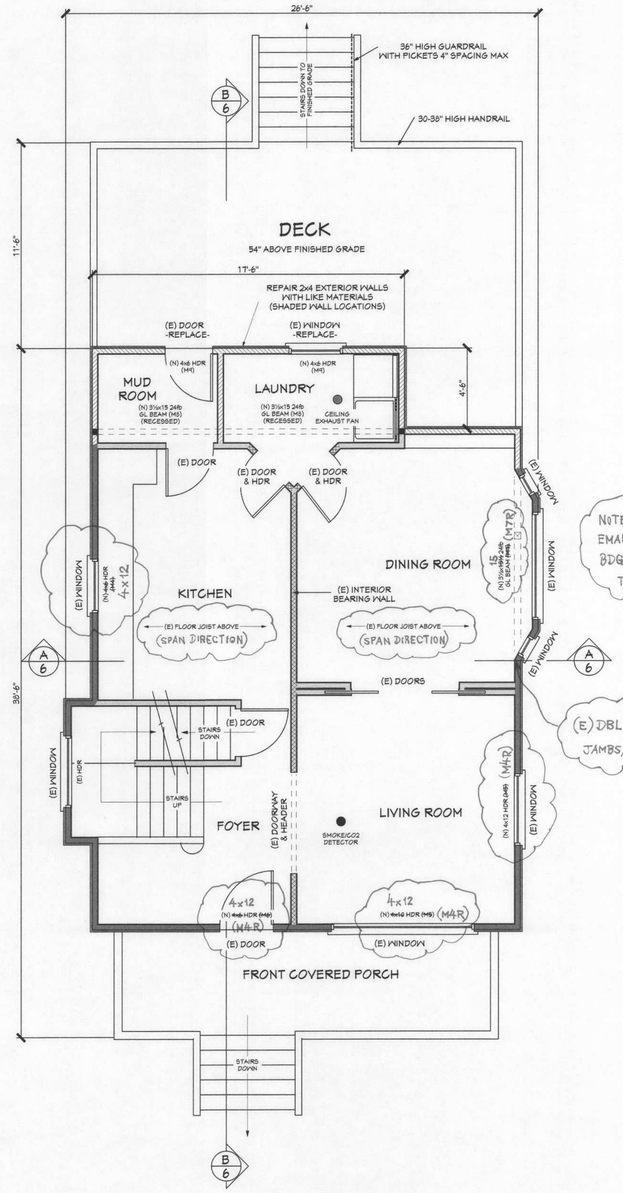

NOTES PER EMAIL FROM BDG 4/14/17 TYP.

(E) DBL STUD JAMBS, TYP.

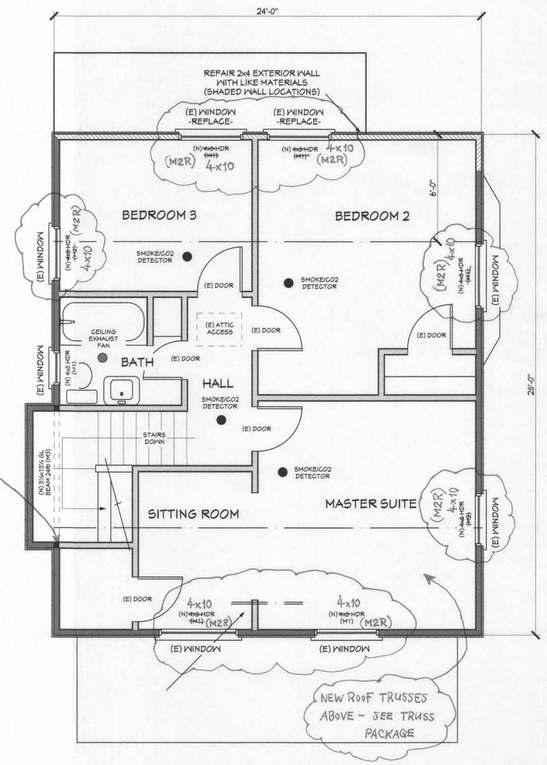

EXISTING & PROPOSED RESTORATION NOTES, DETAILS & SPECIFICATIONS FOR THE:

MAIN FRAMING

SCALE: 1/4" = 1'-0"

EXISTING & PROPOSED RESTORATION NOTES, DETAILS & SPECIFICATIONS FOR THE:

UPPER FRAMING

SCALE: 1/4" = 1'-0"

City of Portland
REVIEWED FOR CODE COMPLIANCE
APR 24 2017
Permit Number

BENTHIN DESIGN GROUP LLC
BDG
PO BOX 42
BEAVERCREEK, OREGON 97004
503-632-2862 1-800-698-9144
EMAIL: INFO@BENDG.COM
WEBSITE: WWW.BENDG.COM

PROJECT NAME:
RILEY

CONTRACTOR/OWNER NAME:
F.I.R.E.

PROJECT INFORMATION:

ADDRESS:
27 NE COOK STREET
PORTLAND, OREGON 97212
MULTNOMAH COUNTY

PROJECT DISCRIPTION:
FIRE RESTORATION:
REPAIR TO 'ORIGINAL' CONDITION

PAGE TITLES:
FRAMING PLANS

- BASEMENT
- MAIN FLOOR
- UPPER FLOOR

RECEIVED
MAR 31 2017
BDG
DOCUMENT SERVICES

PROJECT NUMBER:	2016 - 7226
ORIGINAL DATE:	JAN 2017
REVISION DATE:	3-25-2017
PAGE NUMBER:	4
REFERENCE NUMBER:	4.0

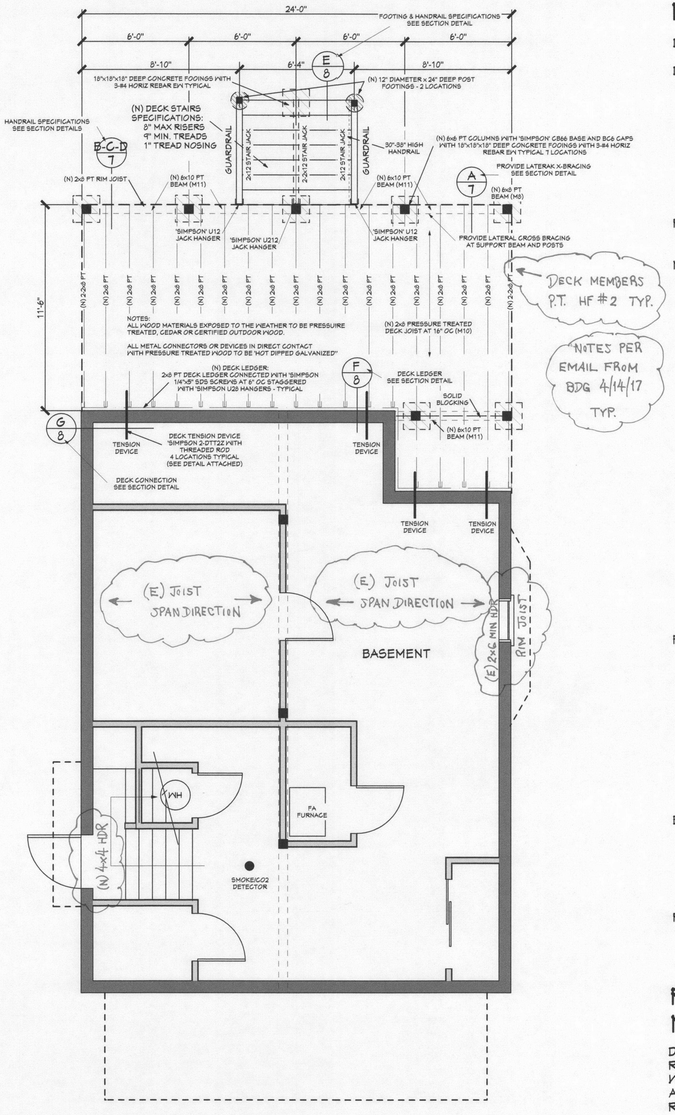

EXISTING & PROPOSED RESTORATION NOTES, DETAILS & SPECIFICATIONS FOR THE:

BASEMENT FRAMING

SCALE: ¼" = 1'-0"

FLOOR FRAMING PLAN NOTES AND SPECIFICATIONS:

DAMAGE AND RESTORATION LOCATIONS:

DEMO:
REMOVE ALL FIRE, SMOKE AND WATER DAMAGED MATERIALS.

FIRE DAMAGE:
MEMBERS OBSERVED TO HAVE STRUCTURAL FIRE DAMAGE ABOVE AND BEYOND SURFACE DISCOLORATION SHALL BE CLEANED AND SCRAPPED TO REMOVE CHARRED MATERIALS. IN ALL CASES, MEMBERS SHALL BE REPLACED TO MATCH EXISTING, UNDAMAGED SECTIONS WHERE SCRAPING OF CHARRED MATERIALS RESULTS IN REDUCED MEMBER SECTION OF MORE THAN 1/8" FOR 1x NOMINAL MEMBERS AND 1/4" FOR 2x AND LARGER NOMINAL MEMBER SIZES.

REPAIRS:
EXTERIOR:
ROOF STRUCTURE: REMOVE AND REPLACE DAMAGED ROOF STRUCTURE MEMBERS,
ROOF SHEATHING AND ROOFING.

EXTERIOR WALLS: REPAIR DAMAGED 2x4 WALL STUDS, WALL SHEATHING AND SIDING TO MATCH EXISTING STRUCTURE.

INTERIOR:
FIRE DAMAGE:
REMOVE AND REPLACE ALL FIRE DAMAGED MATERIALS AND REPLACE WITH LIKE MATERIALS. DAMAGED ROOF MEMBERS TO BE REMOVED AND REPLACED WITH ROOF TRUSSES.

SMOKE AND WATER DAMAGE:
REPLACE ALL DAMAGED MATERIALS AND REPLACE TO MATCH (E) STRUCTURE.

INTERIOR FINISH:
REMOVE ALL DAMAGED LATH AND PLASTER AT WALL AND CEILINGS. REPLACE WITH 1/2" SHEETROCK AND TAPE.

WALL AND CEILING INSULATION:
REMOVE DAMAGE WALL AND CEILING INSULATION AND REPLACE WITH INSULATION VALUES AND NOTED IN THE ENERGY SCHEDULE.

REAR DECK AND STAIRWAY:
REAR DECK TO MATCH EXISTING DECK STRUCTURE.
SEE DECK DETAILS ON PAGES 7 AND 8 ATTACHED.

FRAMING:
MATERIALS:
LUMBER:
WALLS: STUD GRADE OR BETTER
FLOOR JOIST: DF/HF #2 OR BETTER
EXTERIOR MATERIALS:
ALL EXTERIOR WOOD MATERIALS TO BE PRESSURE TREATED, CEDAR OR CERTIFIED OUTDOOR WOOD.

ALL METAL BRACKETS AND HANGERS IN DIRECT CONTACT WITH PRESSURE TREATED WOOD MEMBERS TO BE COATED WITH "HOT DIPPED" GALVANIZED.

ELECTRICAL:
SMOKE/CARBON DIOXIDE DETECTORS:
PROVIDE SMOKE DETECTORS AT EACH SLEEPING ROOM AND ADJACENT LIVING AREA. DETECTORS MUST HAVE BATTERY BACKUP AND BE INTERCONNECTED TO OTHER DETECTORS.

RESTORATION SCHEDULE:
(E) EXISTING STRUCTURE OR OBJECT

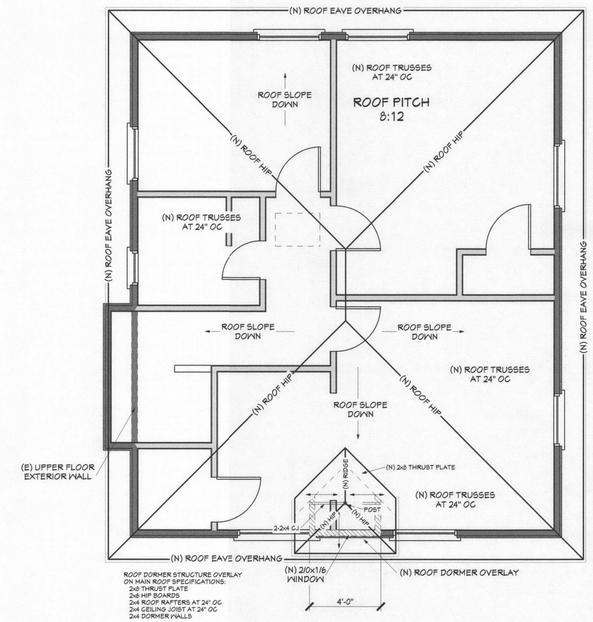

EXISTING & PROPOSED RESTORATION NOTES, DETAILS & SPECIFICATIONS FOR THE:

ROOF PLAN

SCALE: ¼" = 1'-0"

ROOF PLAN NOTES AND SPECIFICATIONS:

DEMO:
REMOVE THE ENTIRE ROOF STRUCTURE AND REPLACE WITH ALL NEW ROOF TRUSSES. ROOF PITCH, OVERHANGS AND ALL OTHER ELEMENTS TO MATCH THEN EXISTING ROOF STRUCTURE.

REPAIR:
REPLACE ALL CONSTRUCTION MATERIALS WITH EXACT LIKE MATERIALS TO MATCH (E) STRUCTURE TO PRE-DAMAGE CONDITION.

ROOF STRUCTURE REPLACE MATERIALS AND SPECIFICATIONS:
(N) ROOFING:
'COMPOSITION' ROOFING
15# FELT
(N) STRUCTURE:
MAIN ROOF STRUCTURE:
7/16" STRUCTURAL SHEATHING
ROOF TRUSSES AT 24" OC WITH 'SIMPSON' H2.5A CLIPS
REAR PORCH STRUCTURE:
7/16" STRUCTURAL SHEATHING
ROOF TRUSSES AT 24" OC WITH 'SIMPSON' H2.5A CLIPS
(N) TRIM AND ACCENTS:
2x BARGE RAFTERS TO MATCH (E) STRUCTURE
(N) ROOF OVERHANGS:
16" ROOF EAVE OVERHANGS (TO MATCH (E) STRUCTURE)
(N) ROOF PITCH:
+/- 8/12 ROOF PITCH TO MATCH EXISTING ROOF PITCH
(FIELD VERIFY ROOF PITCH BEFORE FRAMING)
(N) GUTTERS:
(N) PROVIDE GUTTERS AT ALL ROOF EAVE LOCATIONS
(CONNECT TO EXISTING STORMWATER SYSTEM)

RESTORATION SCHEDULE:
(E) EXISTING STRUCTURE OR OBJECT
(N) NEW/PROPOSED STRUCTURE OR OBJECT

ROOF VENTILATION NOTES AND SPECIFICATIONS:

ROOF VENTILATION
(N) ROOF RIDGE VENTILATION SPECIFICATIONS:
PROVIDE 1/300 SQ. IN. SCREENED ROOF RIDGE VENTILATION
(CONTRACTOR TO SPECIFY AND LOCATE RIDGE VENTS)

(N) ROOF EAVE VENTILATION SPECIFICATIONS:
PROVIDE 1/300 SQ. IN. SCREENED ROOF RIDGE VENTILATION
(CONTRACTOR TO SPECIFY AND LOCATE ENCLOSED SOFFIT VENTS)

City of Portland
REVIEWED FOR CODE COMPLIANCE
APR 24 2017
Permit Number

BENTHIN DESIGN GROUP LLC
BDG
PO BOX 42
BEAVERCREEK, OREGON 97004
503-632-2862 1-800-698-9144
EMAIL: INFO@BENDG.COM
WEBSITE: WWW.BENDG.COM

PROJECT NAME:
RILEY

CONTRACTOR/OWNER NAME:
F.I.R.E.

PROJECT INFORMATION:

ADDRESS:
27 NE COOK STREET
PORTLAND, OREGON 97212
MULTNOMAH COUNTY

PROJECT DISCRIPTION:
FIRE RESTORATION:
REPAIR TO 'ORIGINAL' CONDITION

PAGE TITLES:
FRAMING PLANS

- CEILING
- ROOF
- SPECIFICATIONS

RECEIVED
MAR 31 2017
BDG
DOCUMENT SERVICES

PROJECT NUMBER:	2016 - 7226
ORIGINAL DATE:	JAN 2017
REVISION DATE:	3-25-2017
PAGE NUMBER:	5
REFERENCE NUMBER:	5.0

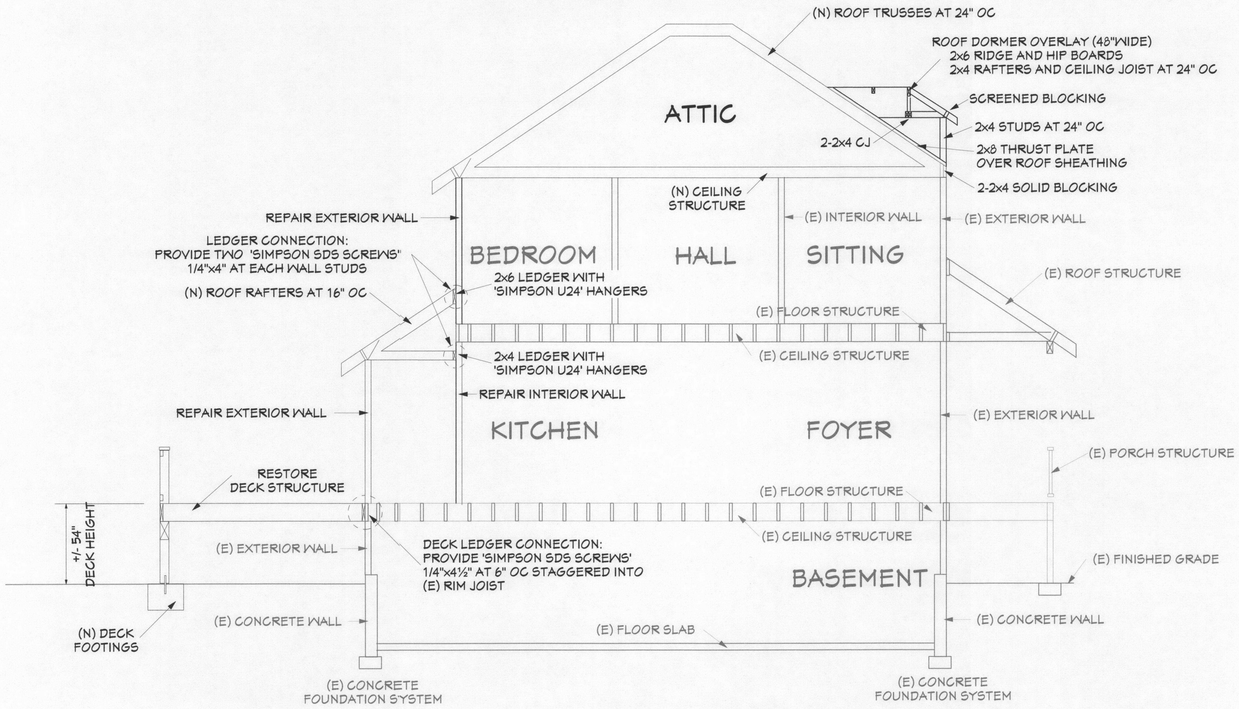

EXISTING & PROPOSED RESTORATION NOTES, DETAILS & SPECIFICATIONS FOR THE:

BUILDING CROSS SECTION B

SCALE: ¼" = 1'-0"

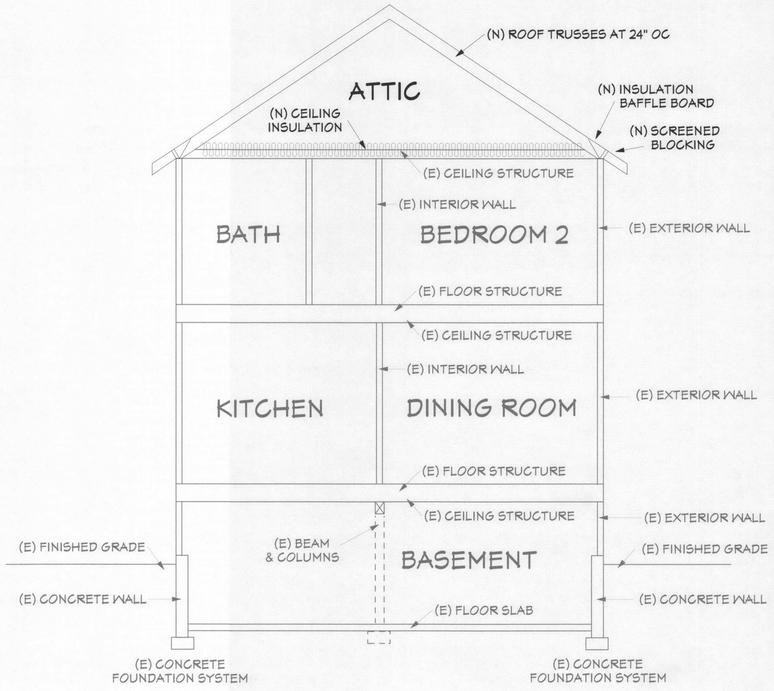

EXISTING & PROPOSED RESTORATION NOTES, DETAILS & SPECIFICATIONS FOR THE:

BUILDING CROSS SECTION A

SCALE: ¼" = 1'-0"

CROSS SECTION NOTES AND SPECIFICATIONS:

ROOFING:
- (N) 'COMPOSITION' ROOFING
- (N) 15# FELT

ROOF STRUCTURE:
- MAIN HOUSE ROOF STRUCTURE:
  - (N) 7/16" (MIN.) STRUCTURAL SHEATHING
  - (N) ROOF TRUSSES AT 24" OC WITH 'SIMPSON H2.5A' CLIPS
- REAR HOUSE ROOF STRUCTURE:
  - (N) 7/16" (MIN.) STRUCTURAL SHEATHING
  - (N) ROOF TRUSSES AT 24" OC WITH 'SIMPSON H2.5A' CLIPS

CEILING STRUCTURE:
- MAIN HOUSE ROOF STRUCTURE:
  - (N) ROOF TRUSSES AT 24" OC
  - (N) 1/2" SHEETROCK AT CEILING
  - *** (N) R-49 FLAT CEILING INSULATION
- REAR HOUSE ROOF STRUCTURE:
  - (N) ROOF TRUSSES AT 24" OC
  - (N) 1/2" SHEETROCK AT CEILING
  - *** (N) R-49 FLAT CEILING INSULATION

ROOF OVERHANGS:
- (N) 1'-4" ROOF EAVE OVERHANGS

TRIM AND ACCENTS
- 2x FASCIA AND BARGE BOARDS

ROOF PITCH:
- (E) +/- 8:12 ROOF PITCH AT ALL ROOF LOCATIONS (FIELD VERIFY ROOF PITCH BEFORE FRAMING)

WALL STRUCTURE:
- EXTERIOR WALLS:
  - (E) "HORIZONTAL" SIDING TO MATCH (E) STRUCTURE
  - (E) 7/16" (MIN.) STRUCTURAL WALL SHEATHING
  - (E) 2x4 WALL STUDS AT 16" OC
  - (N) 1/2" SHEETROCK AT INTERIOR SURFACE
  - *** (N) R-15 EXTERIOR WALL INSULATION
- INTERIOR WALL:
  - (E) 2x4 WALL STUDS
  - (N) 1/2" SHEETROCK AT BOTH SIDES

FLOOR STRUCTURE:
- UPPER FLOOR:
  - (E) UPPER FLOOR STRUCTURE
- MAIN FLOOR:
  - (E) MAIN FLOOR STRUCTURE
  - *** (N) R-30 UNDERFLOOR INSULATION
- LOWER FLOOR:
  - (E) CONCRETE FLOOR SLAB

FOUNDATION/FOOTING STRUCTURE: ONE STORY STRUCTURE
- FOUNDATION:
  - (E) CONCRETE FOUNDATION SYSTEM
- FOOTINGS:
  - (N) PROVIDE NEW DECK FOOTINGS - SEE PLAN

City of Portland
REVIEWED FOR CODE COMPLIANCE
APR 24 2017
Permit Number

BENTHIN DESIGN GROUP LLC
BDG
PO BOX 42
BEAVERCREEK, OREGON 97004
503-632-2862 1-800-698-9144
EMAIL: INFO@BENDG.COM
WEBSITE: WWW.BENDG.COM

PROJECT NAME:
RILEY

CONTRACTOR/OWNER NAME:
F.I.R.E.

PROJECT INFORMATION:

ADDRESS:
27 NE COOK STREET
PORTLAND, OREGON 97212
MULTNOMAH COUNTY

PROJECT DISCRIPTION:
FIRE RESTORATION:
REPAIR TO 'ORIGINAL' CONDITION

PAGE TITLES:
SECTIONS

- CROSS SECTION A
- CROSS SECTION B
- SPECIFICATIONS

PROJECT NUMBER:	2016 - 7226
ORIGINAL DATE:	JAN 2017
REVISION DATE:	3-25-2017
PAGE NUMBER:	6
REFERENCE NUMBER:	6.0

Decks more than 30 inches above grade must resist lateral forces (wind and earthquake) with diagonal cross bracing as shown in Figure 15. Bracing shall be located between posts parallel to beams and bolted with a 3/8" diameter through-bolt at each end to the posts as shown. Diagonal bracing shall also be located perpendicular to beams. Bracing is required in every other bay between posts for decks with joist spans up to 8 feet, and in every bay for decks with joist spans greater than 8 feet. If the deck is free-standing, diagonal bracing must be provided on all the posts and in both directions.

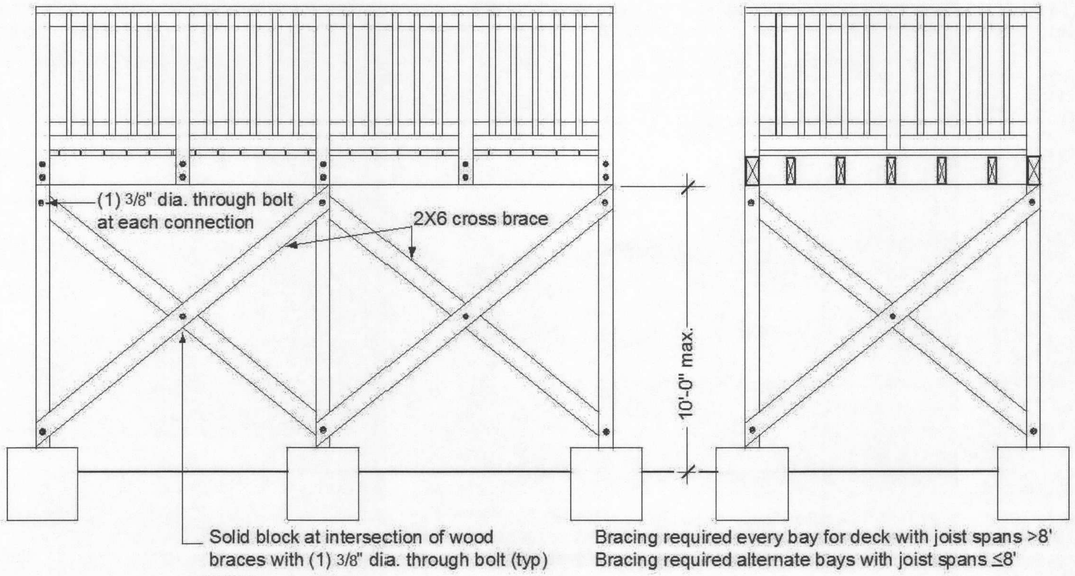

A- DECK LATERAL X-BRACING DETAIL

SCALE: NTS - NOT TO SCALE

Decks and stairways more than 30 inches above the adjacent grade must have guardrails. The guardrail must be designed to withstand a concentrated load of 200 pounds, in any direction anywhere along its length, and the infill area must withstand a load of 50 pounds per square foot area.

Guardrails using aluminum, composite wood, plastic, or other pre-manufactured systems must be designed by a structural engineer licensed in the state of Oregon.

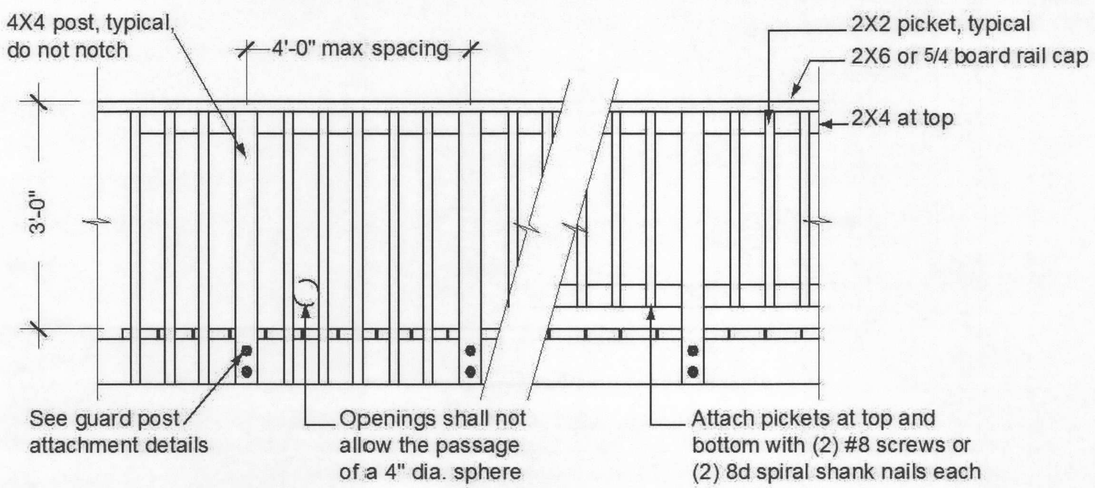

B- DECK RAILING DETAIL

SCALE: NTS - NOT TO SCALE

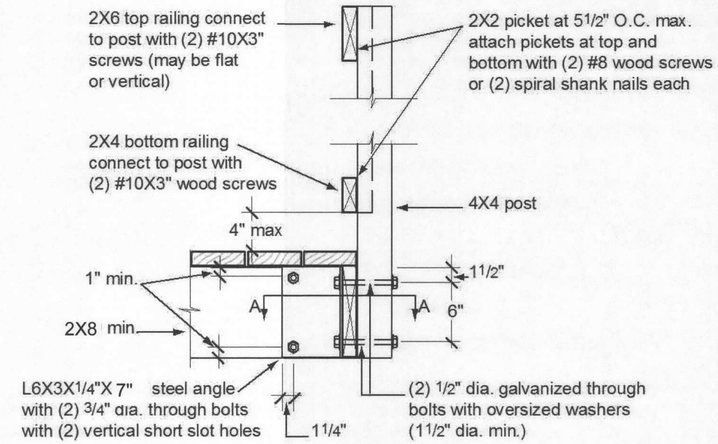

C- DECK RAILING DETAIL

SCALE: NTS - NOT TO SCALE

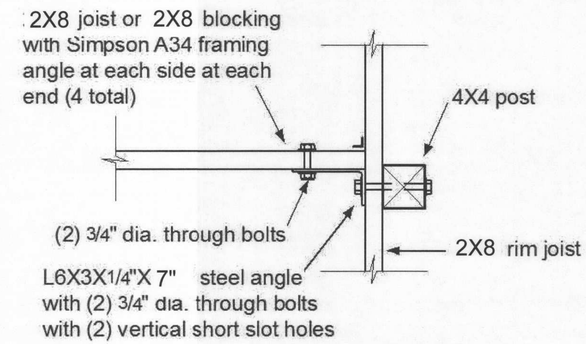

D- DECK RAILING DETAIL

SCALE: NTS - NOT TO SCALE

City of Portland
REVIEWED FOR CODE COMPLIANCE
APR 24 2017
Permit Number

RECEIVED
MAR 31 2017
BDS
DOCUMENT SERVICES

BENTHIN DESIGN GROUP LLC
BDG
PO BOX 42
BEAVERCREEK, OREGON 97004
503-632-2862 1-800-698-9144
EMAIL: INFO@BENDG.COM
WEBSITE: WWW.BENDG.COM

PROJECT NAME:
RILEY

CONTRACTOR/OWNER NAME:
F.I.R.E.

PROJECT INFORMATION:

ADDRESS:
27 NE COOK STREET
PORTLAND, OREGON 97212
MULTNOMAH COUNTY

PROJECT DISCRIPTION:
FIRE RESTORATION:
REPAIR TO 'ORIGINAL' CONDITION

PAGE TITLES:
DETAILS

- A - DECK X BRACING
- B - DECK RAIL
- C - DECK RAIL
- D - DECK RAIL

PROJECT NUMBER:	2016 - 7226
ORIGINAL DATE:	JAN 2017
REVISION DATE:	3-25-2017
PAGE NUMBER:	7
REFERENCE NUMBER:	7.0

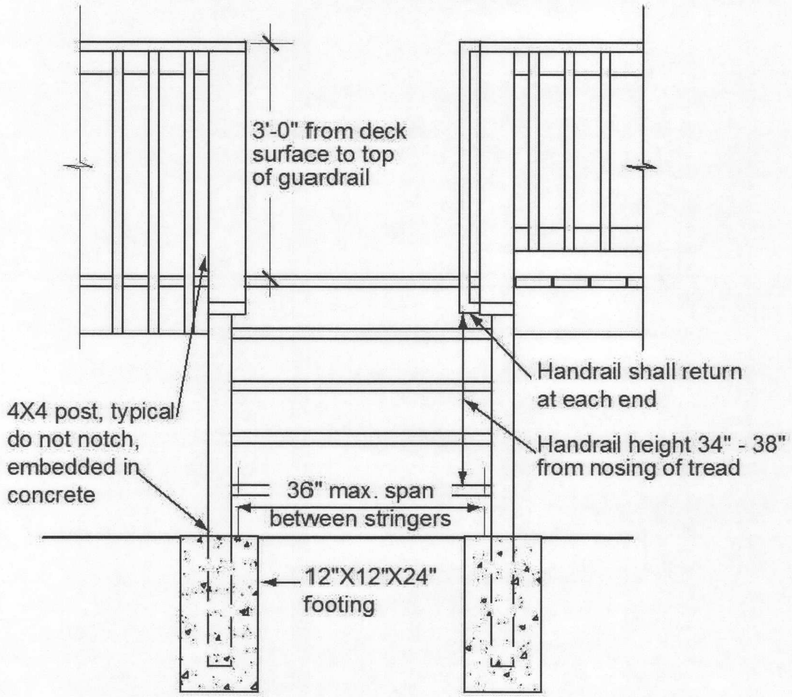

E - DECK FOOTING & RAIL DETAIL

SCALE: NTS - NOT TO SCALE

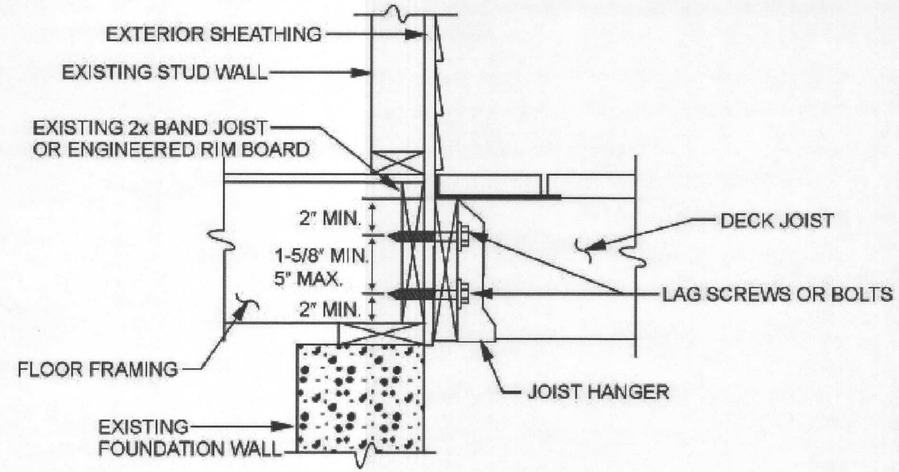

F - DECK LEDGER DETAIL

SCALE: NTS - NOT TO SCALE

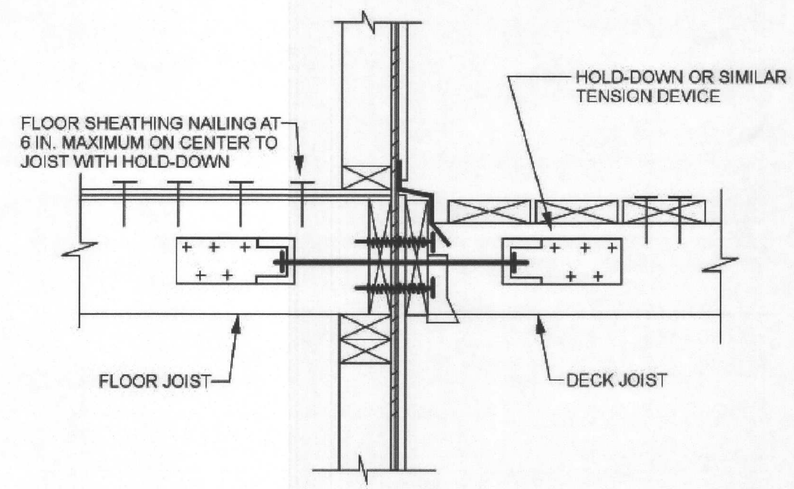

G - DECK CONNECTION DETAIL

SCALE: NTS - NOT TO SCALE

City of Portland
REVIEWED FOR CODE COMPLIANCE
APR 24 2017
Permit Number

BENTHIN DESIGN GROUP LLC
BDG
PO BOX 42
BEAVERCREEK, OREGON 97004
503-632-2862 1-800-698-9144
EMAIL: INFO@BENDG.COM
WEBSITE: WWW.BENDG.COM

PROJECT NAME:
RILEY

CONTRACTOR/OWNER NAME:
F.I.R.E.

PROJECT INFORMATION:

ADDRESS:
27 NE COOK STREET
PORTLAND, OREGON 97212
MULTNOMAH COUNTY

PROJECT DISCRIPTION:
FIRE RESTORATION:
REPAIR TO 'ORIGINAL' CONDITION

PAGE TITLES:
DETAILS

- E - DECK FOOTING
- F - DECK LEDGER
- G - DECK CONNECTION

PROJECT NUMBER:	2016 - 7226
ORIGINAL DATE:	JAN 2017
REVISION DATE:	3-25-2017
PAGE NUMBER:	8
REFERENCE NUMBER:	8.0

TABLE R602.3(1)
FASTENER SCHEDULE FOR STRUCTURAL MEMBERS

ITEM	DESCRIPTION OF BUILDING ELEMENTS	NUMBER AND TYPE OF FASTENER[a, b, c]	SPACING OF FASTENERS
	Roof		
1	Blocking between joists or rafters to top plate, toe nail	3-8d (2 1/2 0.113)	—
2	Ceiling joists to plate, toe nail	3-8d (2 1/2 0.113)	—
3	Ceiling joists not attached to parallel rafter, laps over partitions, face nail	3-10d	—
4	Collar tie rafter, face nail or 1 1/4 20 gage ridge strap	3-10d (3 0.128)	—
5	Rafter to plate, toe nail	2-16d (3 1/2 0.135)	—
6	Roof rafters to ridge, valley or hip rafters: toe nail face nail	 4-16d (3 1/2 0.135) 3-16d (3 1/2 0.135)	 — —
	Wall		
7	Built-up corner studs	10d (3 0.128)	24 o.c.
8	Built-up header, two pieces with 1 1/2 spacer	16d (3 1/2 0.135)	16 o.c. along each edge
9	Continued header, two pieces	16d (3 1/2 0.135)	16 o.c. along each edge
10	Continuous header to stud, toe nail	4-8d (2 1/2 0.113)	—
11	Double studs, face nail	10d (3 0.128)	24 o.c.
12	Double top plates, face nail	10d (3 0.128)	24 o.c.
13	Double top plates, minimum 24-inch offset of end joints, face nail in lapped area	8-16d (3 1/2 0.135)	—
14	Sole plate to joist, solid deck or blocking, face nail	16d (3 1/2 0.135)	16 o.c.
15	Sole plate to joist, solid deck or blocking at braced wall panels	3-16d per 16 (3 1/2 0.135)	—
16	Stud to sole plate, toe nail	3-8d (2 1/2 0.113) or 2-16d 3 1/2 0.135)	— —
17	Top or sole plate to stud, end nail	2-16d (3 1/2 0.135)	—
18	Top plates, laps at corners and intersections, face nail	2-10d (3 0.128)	—
19	1 brace to each stud and plate, face nail	2-8d (2 1/2 0.113) 2 staples 1 3/4	— —
20	1 6 sheathing to each bearing, face nail	2-8d (2 1/2 0.113) 2 staples 1 3/4	— —
21	1 8 sheathing to each bearing, face nail	2-8d (2 1/2 0.113) 3 staples 1 3/4	— —
22	Wider than 1 8 sheathing to each bearing, face nail	3-8d (2 1/2 0.113) 4 staples 1 3/4	— —
	Floor		
23	Joist to sill or girder, toe nail	3-8d (2 1/2 0.113)	—
24	1 6 subfloor or less to each joist, face nail	2-8d (2 1/2 0.113) 2 staples 1 3/4	— —
25	2 subfloor to joist or girder, blind and face nail	2-16d (3 1/2 0.135)	—
26	Rim joist to top plate, toe nail (roof applications also)	8d (2 1/2 0.113)	6 o.c.
27	2 planks (plank & beam – floor & roof)	2-16d (3 1/2 0.135)	at each bearing
28	Built-up girders and beams, 2-inch lumber layers	10d (3 × 0.128)	Nail each layer as follows: 32 o.c. at top and bottom and staggered. Two nails at ends and at each splice.

ITEM	DESCRIPTION OF BUILDING MATERIALS	DESCRIPTION OF FASTENER[b, c, e]	SPACING OF FASTENERS: Edges (Inches)	SPACING OF FASTENERS: Intermediate supports[c, e] (Inches)
	Wood structural panels, subfloor, roof and interior wall sheathing to framing and particleboard wall sheathing to framing			
30	3/8 - 1/2	6d common (2 0.113) nail (subfloor wall) 8d common (2 1/2 0.131) nail (roof)[f]	6	12[g]
31	19/32 - 1	8d common nail (2 1/2 0.131)	6	12[g]
32	1 1/8 - 1 1/4	10d common (3 0.148) nail or 8d (2 1/2 0.131) deformed nail	6	12
	Other wall sheathing[h]			
33	1/2 structural cellulosic fiberboard sheathing	1/2 galvanized roofing nail, 7/16 crown or 1 crown staple 16 ga, 1 1/4 long	3	6
34	25/32 structural cellulosic fiberboard sheathing	1 3/4 galvanized roofing nail, 7/16 crown or 1 crown staple 16 ga, 1 1/2 long	3	6
35	1/2 gypsum sheathing[d]	1 1/2 galvanized roofing nail; staple galvanized, 1 1/2 long; 1 1/4 screws, Type W or S	7	7
36	5/8 gypsum sheathing[d]	1 3/4 glavanized roofing nail; staple galvanized, 1 5/8 long; 1 5/8 screws, Type W or S	7	7
	Wood structural panels, combination subfloor underlayment to framing			
37	3/4 and less	8d deformed (2 0.120) nail or 8d common (2 1/2 0.131) nail	6	12
38	7/8 - 1	8d common (2 1/2 0.131) nail or 8d deformed (2 1/2 0.120) nail	6	12
39	1 1/8 - 1 1/4	10d common (3 0.148) nail or 8d deformed (2 1/2 0.120) nail	6	12

For SI: 1 inch = 25.4 mm, 1 foot = 304.8 mm, 1 mile per hour = 0.447 m/s; 1 ksi = 6.895 MPa.

a. All nails are smooth-common, box or deformed shanks except where otherwise stated. Nails used for framing and sheathing connections shall have minimum average bending yield strengths as shown: 80 ksi for shank diameter of 0.192 inch (20d common nail), 90 ksi for shank diameters larger than 0.142 inch but not larger than 0.177 inch, and 100 ksi for shank diameters of 0.142 inch or less.
b. Staples are 16 gage wire and have a minimum 7/16-inch on diameter crown width.
c. Nails shall be spaced at not more than 6 inches on center at all supports where spans are 48 inches or greater.
d. Four-foot-by-8-foot or 4-foot-by-9-foot panels shall be applied vertically.
e. Spacing of fasteners not included in this table shall be based on Table R602.3(2).
f. For regions having basic wind speed of 110 mph or greater, 8d deformed (2 1/2 0.120) nails shall be used for attaching plywood and wood structural panel roof sheathing to framing within minimum 48-inch distance from gable end walls, if mean roof height is more than 25 feet, up to 35 feet maximum.
g. For regions having basic wind speed of less than 110 mph, nails for attaching wood structural panel roof sheathing to gable end wall framing shall be spaced 6 inches on center. When basic wind speed is greater than 100 mph, nails for attaching panel roof sheathing to intermediate supports shall be spaced 6 inches on center for minimum 48-inch distance from ridges, eaves and gable end walls; and 4 inches on center to gable end wall framing.
h. Gypsum sheathing shall conform to ASTM C 1396 and shall be installed in accordance with GA 253. Fiberboard sheathing shall conform to ASTM C 208.
i. Spacing of fasteners on floor sheathing panel edges applies to panel edges supported by framing members and required blocking and at all floor perimeters only. Spacing of fasteners on roof sheathing panel edges applies to panel edges supported by framing members and required blocking. Blocking of roof or floor sheathing panel edges perpendicular to the framing members need not be provided except as required by other provisions of this code. Floor perimeter shall be supported by framing members or solid blocking.
j. Interior non-braced wall lines may be nailed with a minimum 4-10d nails.

NAIL & ATTACHMENT

TABLE R602.3(2)
ALTERNATE ATTACHMENTS

NOMINAL MATERIAL THICKNESS (Inches)	DESCRIPTION[a, b] OF FASTENER AND LENGTH (Inches)	SPACING[c] OF FASTENERS: Edges (Inches)	SPACING[c] OF FASTENERS: Intermediate supports (Inches)
	Wood structural panels subfloor, roof and wall sheathing to framing and particleboard wall sheathing to framing[d]		
up to 1/2	Staple 15 ga. 1 3/4	4	8
	0.097 - 0.099 Nail 2 1/4	3	6
	Staple 16 ga. 1 3/4	3	6
19/32 and 5/8	0.113 Nail 2	3	6
	Staple 15 and 16 ga. 2	4	8
	0.097 - 0.099 Nail 2 1/4	4	8
23/32 and 3/4	Staple 14 ga. 2	4	8
	Staple 15 ga. 1 3/4	3	6
	0.097 - 0.099 Nail 2 1/4	4	8
	Staple 16 ga. 2	4	8
1	Staple 14 ga. 2 1/4	4	8
	0.113 Nail 2 1/4	3	6
	Staple 15 ga. 2 1/4	4	8
	0.097 - 0.099 Nail 2 1/2	4	8
NOMINAL MATERIAL THICKNESS (Inches)	DESCRIPTION[a, b] OF FASTENER AND LENGTH (Inches)	SPACING[c] OF FASTENERS: Edges (Inches)	SPACING[c] OF FASTENERS: Body of panel[e] (Inches)
	Floor underlayment; plywood-hardboard-particleboard[f]		
	Plywood		
1/4 and 5/16	1 1/4 ring or screw shank nail—minimum 12 1/2 ga. (0.099) shank diameter	3	6
	Staple 18 ga., 7/8, 5/16 crown width	2	5
11/32, 3/8, 15/32, and 1/2	1 1/4 ring or screw shank nail—minimum 12 1/2 ga. (0.099) shank diameter	6	8e
19/32, 5/8, 23/32 and 3/4	1 1/2 ring or screw shank nail—minimum 12 1/2 ga. (0.099) shank diameter	6	8
	Staple 16 ga. 1 1/2	6	8
	Hardboard[f]		
0.200	1 1/2 long ring-grooved underlayment nail	6	6
	4d cement-coated sinker nail	6	6
	Staple 18 ga., 7/8 long (plastic coated)	3	6
	Particleboard		
1/4	4d ring-grooved underlayment nail	3	6
	Staple 18 ga., 7/8 long, 5/16 crown	3	6
3/8	6d ring-grooved underlayment nail	6	10
	Staple 16 ga., 1 1/8 long, 5/8 crown	3	6
1/2, 5/8	6d ring-grooved underlayment nail	6	10
	Staple 16 ga., 1 5/8 long, 5/8 crown	3	6

For SI: 1 inch = 25.4 mm.

a. Nail is a general description and may be T-head, modified round head or round head.
b. Staples shall have a minimum crown width of 7/16-inch on diameter except as noted.
c. Nails or staples shall be spaced at not more than 6 inches on center at all supports where spans are 48 inches or greater. Nails or staples shall be spaced at not more than 12 inches on center at intermediate supports for floors.
d. Fasteners shall be placed in a grid pattern throughout the body of the panel.
e. For 5-ply panels, intermediate nails shall be spaced not more than 12 inches on center each way.
f. Hardboard underlayment shall conform to ANSI/AHA A135.4.

TABLE N1101.2
EXISTING BUILDING COMPONENT REQUIREMENTS

BUILDING COMPONENTS	REQUIRED PERFORMANCE	EQUIV. VALUE
Wall insulation	U-0.80	R-15
Flat ceiling	U-0.025	R-49
Vaulted ceiling > 10 inches nominal rafter depth	U-0.040	R-25
Vaulted ceiling > 8 inches nominal rafter depth	U-0.047	R-21
Underfloor > 10 inches nominal joist depth	U-0.028	R-30
Underfloor > 8 inches nominal joist depth	U-0.032	R-25
Slab edge perimeter	F-0.52	R-15
Windows	U-0.35	U-0.35
Skylights	U-0.60	U-0.60
Exterior doors	U-0.20	R-5
Exterior doors w/ > 2.5 ft^2 glazing	U-0.40	R-2.5
Forced air ducts	n/a	R-8

ENERGY SCHEDULE

City of Portland
REVIEWED FOR CODE COMPLIANCE
APR 24 2017
Permit Number

RECEIVED
MAR 31 2017
BDS
DOCUMENT SERVICES

BENTHIN DESIGN GROUP LLC
BDG
PO BOX 42
BEAVERCREEK, OREGON 97004
503-632-2862 1-800-698-9144
EMAIL: INFO@BENDG.COM
WEBSITE: WWW.BENDG.COM

PROJECT NAME:
RILEY

CONTRACTOR/OWNER NAME:
F.I.R.E.

PROJECT INFORMATION:

ADDRESS:
27 NE COOK STREET
PORTLAND, OREGON 97212
MULTNOMAH COUNTY

PROJECT DISCRIPTION:
FIRE RESTORATION:
REPAIR TO 'ORIGINAL' CONDITION

PAGE TITLES:
SCHEDULES

- NAIL & ATTACHMENT
- ENERGY

PROJECT NUMBER:	2016 - 7226
ORIGINAL DATE:	JAN 2017
REVISION DATE:	3-25-2017
PAGE NUMBER:	9
REFERENCE NUMBER:	9.0

SCAN

MiTek

MiTek USA, Inc.
250 Klug Circle
Corona, CA 92880
951-245-9525

Re: 17-CP8204
F.I.R.E.

The truss drawing(s) referenced below have been prepared by MiTek USA, Inc. under my direct supervision based on the parameters provided by Precision Roof Trusses, Inc.

Pages or sheets covered by this seal: K2936684 thru K2936700

My license renewal date for the state of Oregon is December 31, 2017.

REGISTERED PROFESSIONAL ENGINEER
89200PE
OREGON
MAY 14, 2014
DAVID MERRILL BAXTER
EXPIRES: 12/31/2017

March 9,2017

Baxter, David

IMPORTANT NOTE: Truss Engineer's responsibility is solely for design of individual trusses based upon design parameters shown on referenced truss drawings. Parameters have not been verified as appropriate for any use. Any location identification specified is for file reference only and has not been used in preparing design. Suitability of truss designs for any particular building is the responsibility of the building designer, not the Truss Engineer, per ANSI/TPI-1, Chapter 2.

17-126902 RS

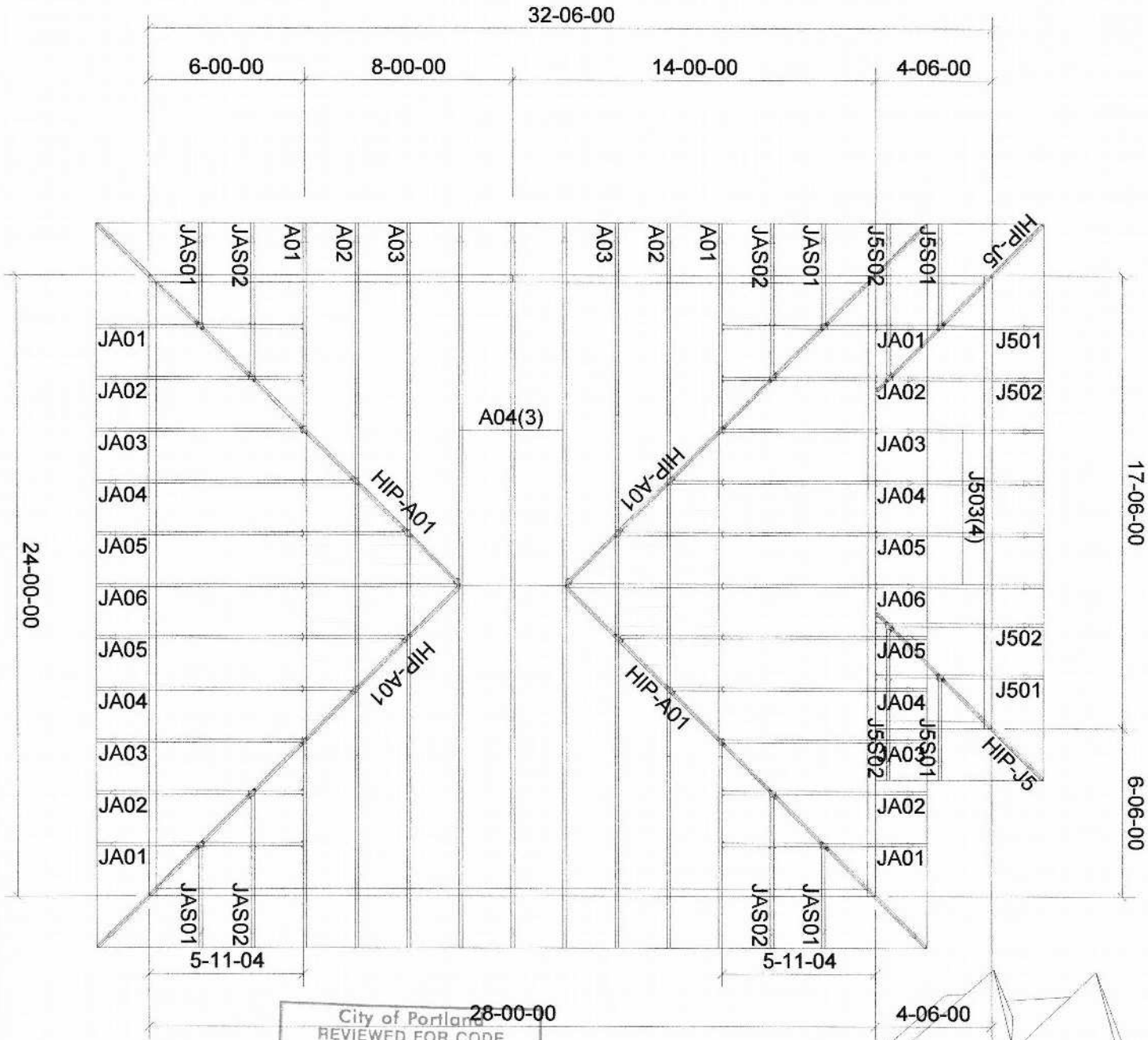

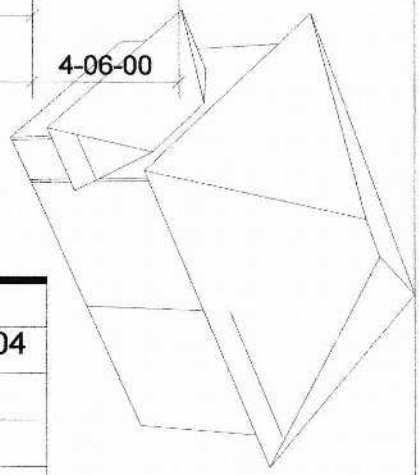

City of Portland
REVIEWED FOR CODE COMPLIANCE
APR 24 2017
Permit Number

PRECISION TRUSS & LUMBER
11550 SE Jennifer St
Clackamas, OR 97015
(503) 656-2983
(503) 656-2647

Client: F.I.R.E.	
Plan : Riley	Quote #: 17-CP8204
Sales : Cliff Puckett x124	Order #: [???]
Site : Riley	Lot : [???]
Pitch: 8/12 Overhang 24" "	Loading: 25.00-7.00-0.00-10.00 Date: 03/09/17 09:20:58

Job	Truss	Truss Type	Qty	Ply	F.I.R.E.
17-CP8204	A01	California Girder	2	1	K2936684
					Job Reference (optional)

PRECISION TRUSS & LUMBER, INC., CLACKAMAS,OR. 97015

8.100 s Jan 9 2017 MiTek Industries, Inc. Thu Mar 09 11:23:56 2017 Page 1
ID:Wk6d7S9BXqoyW2Z56Q4BD0zd0Jc-rBLrlATBysmLedGFQVq9CMKgBu9AAFmlfETpizcg7H

-2-0-0	5-5-8	5-10-3	9-10-4	14-1-12	18-1-13	18-6-8	24-0-0	26-0-0
2-0-0	5-5-8	0-4-11	4-0-1	4-3-9	4-0-1	0-4-11	5-5-8	2-0-0

Scale = 1:46.4

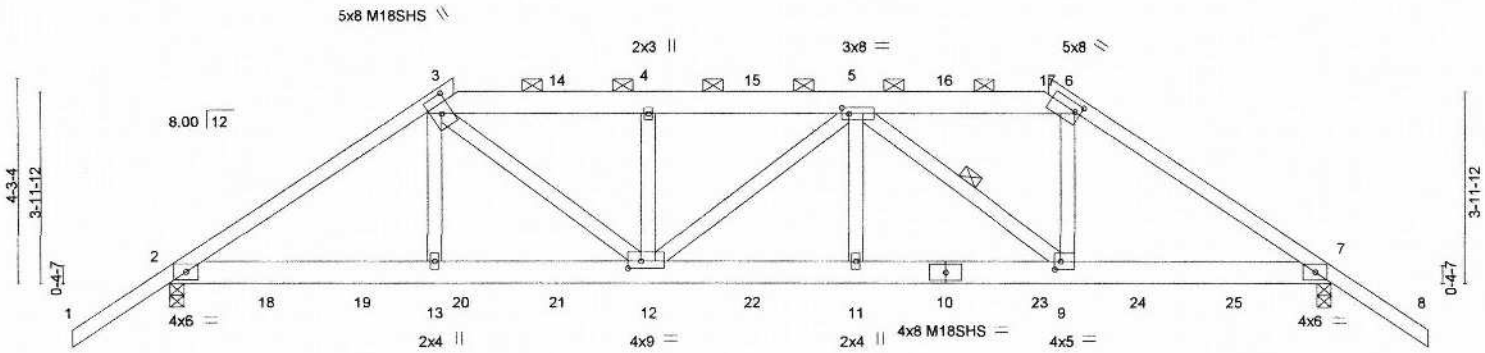

5-5-8	9-10-4	14-1-12	18-6-8	24-0-0
5-5-8	4-4-12	4-3-9	4-4-12	5-5-8

Plate Offsets (X,Y)-- [3:0-4-8,0-2-8], [5:0-1-12,0-1-8], [6:0-1-6,0-2-0], [9:0-1-8,0-2-0], [12:0-3-4,0-1-12]

LOADING (psf)		SPACING-	2-0-0	CSI.		DEFL.	in	(loc)	l/defl	L/d	PLATES	GRIP
TCLL	25.0	Plate Grip DOL	1.15	TC	0.74	Vert(LL)	-0.11	11-12	>999	240	MT20	185/148
TCDL	7.0	Lumber DOL	1.15	BC	0.68	Vert(TL)	-0.40	11-12	>713	180	M18SHS	185/148
BCLL	0.0 *	Rep Stress Incr	NO	WB	0.97	Horz(TL)	0.13	7	n/a	n/a		
BCDL	10.0	Code IRC2012/TPI2007		Matrix-R							Weight: 140 lb	FT = 0%

LUMBER-
TOP CHORD 2x4 DF No.2 *Except* 3-6: 2x6 DF No.2
BOT CHORD 2x6 DF 1800F 1.6E
WEBS 2x4 HF Std *Except* 3-12,5-9: 2x4 DF No.2

BRACING-
TOP CHORD Structural wood sheathing directly applied or 2-7-2 oc purlins, except 2-0-0 oc purlins (2-8-3 max.): 3-6.
BOT CHORD Rigid ceiling directly applied or 10-0-0 oc bracing.
WEBS 1 Row at midpt 5-9

MiTek recommends that Stabilizers and required cross bracing be installed during truss erection, in accordance with Stabilizer Installation guide.

REACTIONS. (lb/size) 2=2887/0-3-8, 7=2881/0-3-8
Max Horz 2=-144(LC 25)

FORCES. (lb) - Max. Comp./Max. Ten. - All forces 250 (lb) or less except when shown.
TOP CHORD 2-3=-4555/0, 3-4=-5731/0, 4-5=-5713/0, 5-6=-3761/0, 6-7=-4549/0
BOT CHORD 2-13=0/3698, 12-13=0/3687, 11-12=0/5741, 9-11=0/5741, 7-9=0/3693
WEBS 3-13=0/466, 3-12=0/2755, 4-12=-1267/0, 5-11=0/530, 5-9=-2592/0, 6-9=0/1895

NOTES-
1) Unbalanced roof live loads have been considered for this design.
2) Wind: ASCE 7-10; Vult=120mph (3-second gust) V(IRC2012)=95mph; TCDL=4.2psf; BCDL=6.0psf; h=25ft; Cat. II; Exp C; enclosed; MWFRS (envelope) automatic zone; cantilever left and right exposed ; end vertical left and right exposed; Lumber DOL=1.60 plate grip DOL=1.60
3) Provide adequate drainage to prevent water ponding.
4) All plates are MT20 plates unless otherwise indicated.
5) This truss has been designed for a 10.0 psf bottom chord live load nonconcurrent with any other live loads.
6) * This truss has been designed for a live load of 20.0psf on the bottom chord in all areas where a rectangle 3-6-0 tall by 2-0-0 wide will fit between the bottom chord and any other members.
7) Load case(s) 1, 2, 3, 4, 5, 6, 7, 8, 9, 10, 11, 12, 13, 14, 15, 16, 17, 18, 19, 20, 21, 22, 23, 24, 25, 26, 27, 28, 29, 30, 31, 32, 33, 34, 35, 36 has/have been modified. Building designer must review loads to verify that they are correct for the intended use of this truss.
8) Graphical purlin representation does not depict the size or the orientation of the purlin along the top and/or bottom chord.
9) Hanger(s) or other connection device(s) shall be provided sufficient to support concentrated load(s) 131 lb down at 8-0-0, 143 lb down at 10-0-0, 150 lb down at 12-0-0, 143 lb down at 14-0-0, 131 lb down at 16-0-0, 347 lb down and 436 lb up at 5-8-12, 315 lb down and 22 lb up at 10-0-0, 409 lb down and 18 lb up at 12-0-0, and 315 lb down and 22 lb up at 14-0-0, and 397 lb down and 400 lb up at 18-1-4 on top chord, and 75 lb down at 2-0-0, 75 lb down at 4-0-0, 75 lb down at 6-0-0, 248 lb down at 8-0-0, 202 lb down at 10-0-0, 202 lb down at 12-0-0, 202 lb down at 14-0-0, 248 lb down at 16-0-0, 75 lb down at 18-0-0, and 75 lb down at 20-0-0, and 75 lb down at 22-0-0 on bottom chord. The design/selection of such connection device(s) is the responsibility of others.
10) In the LOAD CASE(S) section, loads applied to the face of the truss are noted as front (F) or back (B).

LOAD CASE(S) Standard

City of Portland
REVIEWED FOR CODE COMPLIANCE
APR 24 2017
Permit Number

REGISTERED PROFESSIONAL ENGINEER
89200PE
OREGON
MAY 14, 2014
DAVID MERRILL BAXTER

EXPIRES: 12/31/2017
March 9,2017

Continued on page 2

MiTek
250 Klug Circle
Corona, CA 92880

LOAD CASE(S) Standard

1) Dead + Roof Live (balanced): Lumber Increase=1.15, Plate Increase=1.15
   Uniform Loads (plf)
   Vert: 1-3=-64, 3-6=-64, 6-8=-64, 2-7=-20
   Concentrated Loads (lb)
   Vert: 3=-256(F) 10=-234(F) 12=-188(F) 4=-347(F=-143) 11=-188(F) 5=-347(F=-143) 14=-291(F=-131) 15=-459(F=-150) 16=-291(F=-131) 17=-256(F) 18=-37(F) 19=-37(F) 20=-37(F) 21=-234(F) 22=-188(F) 23=-37(F) 24=-37(F) 25=-37(F)
2) Dead + 0.75 Roof Live (balanced): Lumber Increase=1.15, Plate Increase=1.15
   Uniform Loads (plf)
   Vert: 1-3=-52, 3-6=-51, 6-8=-52, 2-7=-20
   Concentrated Loads (lb)
   Vert: 3=-202(F) 10=-219(F) 12=-173(F) 4=-332(F=-143) 11=-173(F) 5=-332(F=-143) 14=-287(F=-131) 15=-430(F=-150) 16=-287(F=-131) 17=-202(F) 18=-37(F) 19=-37(F) 20=-37(F) 21=-219(F) 22=-173(F) 23=-37(F) 24=-37(F) 25=-37(F)
3) Dead + Uninhabitable Attic Without Storage: Lumber Increase=1.25, Plate Increase=1.25
   Uniform Loads (plf)
   Vert: 1-3=-14, 3-6=-14, 6-8=-14, 2-7=-40
   Concentrated Loads (lb)
   Vert: 3=-43(F) 10=-213(F) 12=-167(F) 4=-284(F=-143) 11=-167(F) 5=-284(F=-143) 14=-273(F=-131) 15=-345(F=-150) 16=-273(F=-131) 17=-43(F) 18=-75(F) 19=-75(F) 20=-75(F) 21=-213(F) 22=-167(F) 23=-75(F) 24=-75(F) 25=-75(F)
4) Dead + 0.6 MWFRS Wind (Pos. Internal) Left: Lumber Increase=1.60, Plate Increase=1.60
   Uniform Loads (plf)
   Vert: 1-2=3, 2-3=-12, 3-6=17, 6-7=17, 7-8=10, 2-7=-12
   Horz: 1-2=-12, 2-3=3, 3-4=25, 6-7=25, 7-8=19
   Concentrated Loads (lb)
   Vert: 3=384(F) 10=-152(F) 12=-105(F) 4=-158(F=-143) 11=-105(F) 5=-158(F=-143) 14=-271(F=-131) 15=-169(F=-150) 16=-271(F=-131) 17=348(F) 18=-22(F) 19=-22(F) 20=-22(F) 21=-152(F) 22=-105(F) 23=-22(F) 24=-22(F) 25=-22(F)
5) Dead + 0.6 MWFRS Wind (Pos. Internal) Right: Lumber Increase=1.60, Plate Increase=1.60
   Uniform Loads (plf)
   Vert: 1-2=10, 2-3=17, 3-6=36, 6-7=-12, 7-8=3, 2-7=-12
   Horz: 1-2=-19, 2-3=-25, 3-4=44, 6-7=-3, 7-8=12
   Concentrated Loads (lb)
   Vert: 3=318(F) 10=-152(F) 12=-105(F) 4=-197(F=-143) 11=-105(F) 5=-197(F=-143) 14=-271(F=-131) 15=-207(F=-150) 16=-271(F=-131) 17=342(F) 18=-22(F) 19=-22(F) 20=-22(F) 21=-152(F) 22=-105(F) 23=-22(F) 24=-22(F) 25=-22(F)
6) Dead + 0.6 MWFRS Wind (Neg. Internal) Left: Lumber Increase=1.60, Plate Increase=1.60
   Uniform Loads (plf)
   Vert: 1-2=-24, 2-3=-30, 3-6=-2, 6-7=-2, 7-8=5, 2-7=-20
   Horz: 1-2=10, 2-3=16, 3-4=12, 6-7=12, 7-8=19
   Concentrated Loads (lb)
   Vert: 3=436(F) 10=-144(F) 12=-97(F) 4=-121(F=-143) 11=-97(F) 5=-121(F=-143) 14=-260(F=-131) 15=-132(F=-150) 16=-260(F=-131) 17=400(F) 18=-14(F) 19=-14(F) 20=-14(F) 21=-144(F) 22=-97(F) 23=-14(F) 24=-14(F) 25=-14(F)
7) Dead + 0.6 MWFRS Wind (Neg. Internal) Right: Lumber Increase=1.60, Plate Increase=1.60
   Uniform Loads (plf)
   Vert: 1-2=5, 2-3=-2, 3-6=18, 6-7=-30, 7-8=-24, 2-7=-20
   Horz: 1-2=-19, 2-3=-12, 3-4=32, 6-7=-16, 7-8=-10
   Concentrated Loads (lb)
   Vert: 3=370(F) 10=-144(F) 12=-97(F) 4=-160(F=-143) 11=-97(F) 5=-160(F=-143) 14=-260(F=-131) 15=-171(F=-150) 16=-260(F=-131) 17=394(F) 18=-14(F) 19=-14(F) 20=-14(F) 21=-144(F) 22=-97(F) 23=-14(F) 24=-14(F) 25=-14(F)
8) Dead + 0.6 MWFRS Wind (Pos. Internal) 1st Parallel: Lumber Increase=1.60, Plate Increase=1.60
   Uniform Loads (plf)
   Vert: 1-2=30, 2-3=36, 3-6=17, 6-7=17, 7-8=10, 2-7=-12
   Horz: 1-2=-38, 2-3=-44, 3-4=25, 6-7=25, 7-8=19
   Concentrated Loads (lb)
   Vert: 3=324(F) 10=-152(F) 12=-105(F) 4=-158(F=-143) 11=-105(F) 5=-158(F=-143) 14=-271(F=-131) 15=-169(F=-150) 16=-271(F=-131) 17=348(F) 18=-22(F) 19=-22(F) 20=-22(F) 21=-152(F) 22=-105(F) 23=-22(F) 24=-22(F) 25=-22(F)
9) Dead + 0.6 MWFRS Wind (Pos. Internal) 2nd Parallel: Lumber Increase=1.60, Plate Increase=1.60
   Uniform Loads (plf)
   Vert: 1-2=10, 2-3=17, 3-6=36, 6-7=36, 7-8=30, 2-7=-12
   Horz: 1-2=-19, 2-3=-25, 3-4=44, 6-7=44, 7-8=38
   Concentrated Loads (lb)
   Vert: 3=318(F) 10=-152(F) 12=-105(F) 4=-197(F=-143) 11=-105(F) 5=-197(F=-143) 14=-271(F=-131) 15=-207(F=-150) 16=-271(F=-131) 17=294(F) 18=-22(F) 19=-22(F) 20=-22(F) 21=-152(F) 22=-105(F) 23=-22(F) 24=-22(F) 25=-22(F)
10) Dead + 0.6 MWFRS Wind (Pos. Internal) 3rd Parallel: Lumber Increase=1.60, Plate Increase=1.60
   Uniform Loads (plf)
   Vert: 1-2=16, 2-3=23, 3-6=11, 6-7=11, 7-8=5, 2-7=-12
   Horz: 1-2=-25, 2-3=-31, 3-4=20, 6-7=20, 7-8=13
   Concentrated Loads (lb)
   Vert: 3=350(F) 10=-152(F) 12=-105(F) 4=-147(F=-143) 11=-105(F) 5=-147(F=-143) 14=-271(F=-131) 15=-158(F=-150) 16=-271(F=-131) 17=364(F) 18=-22(F) 19=-22(F) 20=-22(F) 21=-152(F) 22=-105(F) 23=-22(F) 24=-22(F) 25=-22(F)
11) Dead + 0.6 MWFRS Wind (Pos. Internal) 4th Parallel: Lumber Increase=1.60, Plate Increase=1.60
   Uniform Loads (plf)
   Vert: 1-2=5, 2-3=11, 3-6=23, 6-7=23, 7-8=16, 2-7=-12
   Horz: 1-2=-13, 2-3=-20, 3-4=31, 6-7=31, 7-8=25
   Concentrated Loads (lb)
   Vert: 3=346(F) 10=-152(F) 12=-105(F) 4=-169(F=-143) 11=-105(F) 5=-169(F=-143) 14=-271(F=-131) 15=-180(F=-150) 16=-271(F=-131) 17=332(F) 18=-22(F) 19=-22(F) 20=-22(F) 21=-152(F) 22=-105(F) 23=-22(F) 24=-22(F) 25=-22(F)
12) Dead + 0.6 MWFRS Wind (Neg. Internal) 1st Parallel: Lumber Increase=1.60, Plate Increase=1.60

City of Portland
REVIEWED FOR CODE COMPLIANCE
APR 24 2017
Permit Number

Continued on page 3

LOAD CASE(S) Standard

Uniform Loads (plf)
Vert: 1-2=24, 2-3=18, 3-6=-2, 6-7=-2, 7-8=5, 2-7=-20
Horz: 1-2=-38, 2-3=-32, 3-4=12, 6-7=12, 7-8=19
Concentrated Loads (lb)
Vert: 3=376(F) 10=-144(F) 12=-97(F) 4=-121(F=-143) 11=-97(F) 5=-121(F=-143) 14=-260(F=-131) 15=-132(F=-150) 16=-260(F=-131) 17=400(F) 18=-14(F) 19=-14(F) 20=-14(F) 21=-144(F) 22=-97(F) 23=-14(F) 24=-14(F) 25=-14(F)

13) Dead + 0.6 MWFRS Wind (Neg. Internal) 2nd Parallel: Lumber Increase=1.60, Plate Increase=1.60
Uniform Loads (plf)
Vert: 1-2=5, 2-3=-2, 3-6=18, 6-7=18, 7-8=24, 2-7=-20
Horz: 1-2=-19, 2-3=-12, 3-4=32, 6-7=32, 7-8=38
Concentrated Loads (lb)
Vert: 3=370(F) 10=-144(F) 12=-97(F) 4=-160(F=-143) 11=-97(F) 5=-160(F=-143) 14=-260(F=-131) 15=-171(F=-150) 16=-260(F=-131) 17=346(F) 18=-14(F) 19=-14(F) 20=-14(F) 21=-144(F) 22=-97(F) 23=-14(F) 24=-14(F) 25=-14(F)

14) Dead: Lumber Increase=0.90, Plate Increase=0.90 Plt. metal=0.90
Uniform Loads (plf)
Vert: 1-3=-14, 3-6=-14, 6-8=-14, 2-7=-20
Concentrated Loads (lb)
Vert: 3=-43(F) 10=-174(F) 12=-128(F) 4=-284(F=-143) 11=-128(F) 5=-284(F=-143) 14=-273(F=-131) 15=-345(F=-150) 16=-273(F=-131) 17=-43(F) 18=-37(F) 19=-37(F) 20=-37(F) 21=-174(F) 22=-128(F) 23=-37(F) 24=-37(F) 25=-37(F)

15) Dead + 0.75 Roof Live (bal.) + 0.75(0.6 MWFRS Wind (Neg. Int) Left): Lumber Increase=1.60, Plate Increase=1.60
Uniform Loads (plf)
Vert: 1-2=-59, 2-3=-63, 3-6=-42, 6-7=-42, 7-8=-37, 2-7=-20
Horz: 1-2=7, 2-3=12, 3-4=9, 6-7=9, 7-8=14
Concentrated Loads (lb)
Vert: 3=291(F) 10=-144(F) 12=-97(F) 4=-157(F=-143) 11=-97(F) 5=-157(F=-143) 14=-260(F=-131) 15=-179(F=-150) 16=-260(F=-131) 17=265(F) 18=-14(F) 19=-14(F) 20=-14(F) 21=-144(F) 22=-97(F) 23=-14(F) 24=-14(F) 25=-14(F)

16) Dead + 0.75 Roof Live (bal.) + 0.75(0.6 MWFRS Wind (Neg. Int) Right): Lumber Increase=1.60, Plate Increase=1.60
Uniform Loads (plf)
Vert: 1-2=-37, 2-3=-42, 3-6=-28, 6-7=-63, 7-8=-59, 2-7=-20
Horz: 1-2=-14, 2-3=-9, 3-4=24, 6-7=-12, 7-8=-7
Concentrated Loads (lb)
Vert: 3=242(F) 10=-144(F) 12=-97(F) 4=-186(F=-143) 11=-97(F) 5=-186(F=-143) 14=-260(F=-131) 15=-208(F=-150) 16=-260(F=-131) 17=260(F) 18=-14(F) 19=-14(F) 20=-14(F) 21=-144(F) 22=-97(F) 23=-14(F) 24=-14(F) 25=-14(F)

17) Dead + 0.75 Roof Live (bal.) + 0.75(0.6 MWFRS Wind (Neg. Int) 1st Parallel): Lumber Increase=1.60, Plate Increase=1.60
Uniform Loads (plf)
Vert: 1-2=-23, 2-3=-28, 3-6=-42, 6-7=-42, 7-8=-37, 2-7=-20
Horz: 1-2=-29, 2-3=-24, 3-4=9, 6-7=9, 7-8=14
Concentrated Loads (lb)
Vert: 3=247(F) 10=-144(F) 12=-97(F) 4=-157(F=-143) 11=-97(F) 5=-157(F=-143) 14=-260(F=-131) 15=-179(F=-150) 16=-260(F=-131) 17=265(F) 18=-14(F) 19=-14(F) 20=-14(F) 21=-144(F) 22=-97(F) 23=-14(F) 24=-14(F) 25=-14(F)

18) Dead + 0.75 Roof Live (bal.) + 0.75(0.6 MWFRS Wind (Neg. Int) 2nd Parallel): Lumber Increase=1.60, Plate Increase=1.60
Uniform Loads (plf)
Vert: 1-2=-37, 2-3=-42, 3-6=-28, 6-7=-28, 7-8=-23, 2-7=-20
Horz: 1-2=-14, 2-3=-9, 3-4=24, 6-7=24, 7-8=29
Concentrated Loads (lb)
Vert: 3=242(F) 10=-144(F) 12=-97(F) 4=-186(F=-143) 11=-97(F) 5=-186(F=-143) 14=-260(F=-131) 15=-208(F=-150) 16=-260(F=-131) 17=224(F) 18=-14(F) 19=-14(F) 20=-14(F) 21=-144(F) 22=-97(F) 23=-14(F) 24=-14(F) 25=-14(F)

19) 1st Dead + Roof Live (unbalanced): Lumber Increase=1.15, Plate Increase=1.15
Uniform Loads (plf)
Vert: 1-3=-64, 3-6=-14, 6-8=-14, 2-7=-20
Concentrated Loads (lb)
Vert: 3=-335(F) 10=-234(F) 12=-188(F) 4=-447(F=-143) 11=-188(F) 5=-447(F=-143) 14=-386(F=-131) 15=-559(F=-150) 16=-386(F=-131) 17=-397(F) 18=-37(F) 19=-37(F) 20=-37(F) 21=-234(F) 22=-188(F) 23=-37(F) 24=-37(F) 25=-37(F)

20) 2nd Dead + Roof Live (unbalanced): Lumber Increase=1.15, Plate Increase=1.15
Uniform Loads (plf)
Vert: 1-3=-14, 3-6=-64, 6-8=-64, 2-7=-20
Concentrated Loads (lb)
Vert: 3=-318(F) 10=-234(F) 12=-188(F) 4=-347(F=-143) 11=-188(F) 5=-347(F=-143) 14=-291(F=-131) 15=-459(F=-150) 16=-291(F=-131) 17=-256(F) 18=-37(F) 19=-37(F) 20=-37(F) 21=-234(F) 22=-188(F) 23=-37(F) 24=-37(F) 25=-37(F)

21) 3rd Dead + 0.75 Roof Live (unbalanced): Lumber Increase=1.15, Plate Increase=1.15
Uniform Loads (plf)
Vert: 1-3=-52, 3-6=-14, 6-8=-14, 2-7=-20
Concentrated Loads (lb)
Vert: 3=-262(F) 10=-219(F) 12=-173(F) 4=-407(F=-143) 11=-173(F) 5=-407(F=-143) 14=-358(F=-131) 15=-505(F=-150) 16=-358(F=-131) 17=-308(F) 18=-37(F) 19=-37(F) 20=-37(F) 21=-219(F) 22=-173(F) 23=-37(F) 24=-37(F) 25=-37(F)

22) 4th Dead + 0.75 Roof Live (unbalanced): Lumber Increase=1.15, Plate Increase=1.15
Uniform Loads (plf)
Vert: 1-3=-14, 3-6=-51, 6-8=-52, 2-7=-20
Concentrated Loads (lb)
Vert: 3=-249(F) 10=-219(F) 12=-173(F) 4=-332(F=-143) 11=-173(F) 5=-332(F=-143) 14=-287(F=-131) 15=-430(F=-150) 16=-287(F=-131) 17=-202(F) 18=-37(F) 19=-37(F) 20=-37(F) 21=-219(F) 22=-173(F) 23=-37(F) 24=-37(F) 25=-37(F)

23) Reversal: Dead + 0.6 MWFRS Wind (Pos. Internal) Left: Lumber Increase=1.60, Plate Increase=1.60
Uniform Loads (plf)
Vert: 1-2=3, 2-3=-12, 3-6=17, 6-7=17, 7-8=10, 2-7=-12
Horz: 1-2=-12, 2-3=3, 3-4=25, 6-7=25, 7-8=19

City of Portland
REVIEWED FOR CODE COMPLIANCE
APR 24 2017
Permit Number

Continued on page 4

LOAD CASE(S) Standard

Concentrated Loads (lb)
Vert: 3=-282(F) 10=-235(F) 12=-189(F) 4=-419(F=-143) 11=-189(F) 5=-419(F=-143) 14=-382(F=-131) 15=-503(F=-150) 16=-382(F=-131) 17=-317(F) 18=-45(F) 19=-45(F) 20=-45(F) 21=-235(F) 22=-190(F) 23=-45(F) 24=-45(F) 25=-45(F)

24) Reversal: Dead + 0.6 MWFRS Wind (Pos. Internal) Right: Lumber Increase=1.60, Plate Increase=1.60
Uniform Loads (plf)
Vert: 1-2=10, 2-3=17, 3-6=36, 6-7=-12, 7-8=3, 2-7=-12
Horz: 1-2=-19, 2-3=-25, 3-4=44, 6-7=-3, 7-8=12
Concentrated Loads (lb)
Vert: 3=-347(F) 10=-235(F) 12=-189(F) 4=-458(F=-143) 11=-189(F) 5=-458(F=-143) 14=-418(F=-131) 15=-542(F=-150) 16=-418(F=-131) 17=-324(F) 18=-45(F) 19=-45(F) 20=-45(F) 21=-235(F) 22=-190(F) 23=-45(F) 24=-45(F) 25=-45(F)

25) Reversal: Dead + 0.6 MWFRS Wind (Neg. Internal) Left: Lumber Increase=1.60, Plate Increase=1.60
Uniform Loads (plf)
Vert: 1-2=-24, 2-3=-30, 3-6=-2, 6-7=-2, 7-8=5, 2-7=-20
Horz: 1-2=10, 2-3=16, 3-4=12, 6-7=12, 7-8=19
Concentrated Loads (lb)
Vert: 3=-230(F) 10=-227(F) 12=-181(F) 4=-382(F=-143) 11=-181(F) 5=-382(F=-143) 14=-347(F=-131) 15=-467(F=-150) 16=-347(F=-131) 17=-265(F) 18=-37(F) 19=-37(F) 20=-37(F) 21=-227(F) 22=-182(F) 23=-37(F) 24=-37(F) 25=-37(F)

26) Reversal: Dead + 0.6 MWFRS Wind (Neg. Internal) Right: Lumber Increase=1.60, Plate Increase=1.60
Uniform Loads (plf)
Vert: 1-2=5, 2-3=-2, 3-6=18, 6-7=-30, 7-8=-24, 2-7=-20
Horz: 1-2=-19, 2-3=-12, 3-4=32, 6-7=-16, 7-8=-10
Concentrated Loads (lb)
Vert: 3=-295(F) 10=-227(F) 12=-181(F) 4=-421(F=-143) 11=-181(F) 5=-421(F=-143) 14=-383(F=-131) 15=-505(F=-150) 16=-383(F=-131) 17=-272(F) 18=-37(F) 19=-37(F) 20=-37(F) 21=-227(F) 22=-182(F) 23=-37(F) 24=-37(F) 25=-37(F)

27) Reversal: Dead + 0.6 MWFRS Wind (Pos. Internal) 1st Parallel: Lumber Increase=1.60, Plate Increase=1.60
Uniform Loads (plf)
Vert: 1-2=30, 2-3=36, 3-6=17, 6-7=17, 7-8=10, 2-7=-12
Horz: 1-2=-38, 2-3=-44, 3-4=25, 6-7=25, 7-8=19
Concentrated Loads (lb)
Vert: 3=-341(F) 10=-235(F) 12=-189(F) 4=-419(F=-143) 11=-189(F) 5=-419(F=-143) 14=-382(F=-131) 15=-503(F=-150) 16=-382(F=-131) 17=-317(F) 18=-45(F) 19=-45(F) 20=-45(F) 21=-235(F) 22=-190(F) 23=-45(F) 24=-45(F) 25=-45(F)

28) Reversal: Dead + 0.6 MWFRS Wind (Pos. Internal) 2nd Parallel: Lumber Increase=1.60, Plate Increase=1.60
Uniform Loads (plf)
Vert: 1-2=10, 2-3=17, 3-6=36, 6-7=36, 7-8=30, 2-7=-12
Horz: 1-2=-19, 2-3=-25, 3-4=44, 6-7=44, 7-8=38
Concentrated Loads (lb)
Vert: 3=-347(F) 10=-235(F) 12=-189(F) 4=-458(F=-143) 11=-189(F) 5=-458(F=-143) 14=-418(F=-131) 15=-542(F=-150) 16=-418(F=-131) 17=-371(F) 18=-45(F) 19=-45(F) 20=-45(F) 21=-235(F) 22=-190(F) 23=-45(F) 24=-45(F) 25=-45(F)

29) Reversal: Dead + 0.6 MWFRS Wind (Pos. Internal) 3rd Parallel: Lumber Increase=1.60, Plate Increase=1.60
Uniform Loads (plf)
Vert: 1-2=16, 2-3=23, 3-6=11, 6-7=11, 7-8=5, 2-7=-12
Horz: 1-2=-25, 2-3=-31, 3-4=20, 6-7=20, 7-8=13
Concentrated Loads (lb)
Vert: 3=-315(F) 10=-235(F) 12=-189(F) 4=-408(F=-143) 11=-189(F) 5=-408(F=-143) 14=-371(F=-131) 15=-492(F=-150) 16=-371(F=-131) 17=-301(F) 18=-45(F) 19=-45(F) 20=-45(F) 21=-235(F) 22=-190(F) 23=-45(F) 24=-45(F) 25=-45(F)

30) Reversal: Dead + 0.6 MWFRS Wind (Pos. Internal) 4th Parallel: Lumber Increase=1.60, Plate Increase=1.60
Uniform Loads (plf)
Vert: 1-2=5, 2-3=11, 3-6=23, 6-7=23, 7-8=16, 2-7=-12
Horz: 1-2=-13, 2-3=-20, 3-4=31, 6-7=31, 7-8=25
Concentrated Loads (lb)
Vert: 3=-319(F) 10=-235(F) 12=-189(F) 4=-431(F=-143) 11=-189(F) 5=-431(F=-143) 14=-392(F=-131) 15=-515(F=-150) 16=-392(F=-131) 17=-333(F) 18=-45(F) 19=-45(F) 20=-45(F) 21=-235(F) 22=-190(F) 23=-45(F) 24=-45(F) 25=-45(F)

31) Reversal: Dead + 0.6 MWFRS Wind (Neg. Internal) 1st Parallel: Lumber Increase=1.60, Plate Increase=1.60
Uniform Loads (plf)
Vert: 1-2=24, 2-3=18, 3-6=-2, 6-7=-2, 7-8=5, 2-7=-20
Horz: 1-2=-38, 2-3=-32, 3-4=12, 6-7=12, 7-8=19
Concentrated Loads (lb)
Vert: 3=-289(F) 10=-227(F) 12=-181(F) 4=-382(F=-143) 11=-181(F) 5=-382(F=-143) 14=-347(F=-131) 15=-467(F=-150) 16=-347(F=-131) 17=-265(F) 18=-37(F) 19=-37(F) 20=-37(F) 21=-227(F) 22=-182(F) 23=-37(F) 24=-37(F) 25=-37(F)

32) Reversal: Dead + 0.6 MWFRS Wind (Neg. Internal) 2nd Parallel: Lumber Increase=1.60, Plate Increase=1.60
Uniform Loads (plf)
Vert: 1-2=5, 2-3=-2, 3-6=18, 6-7=18, 7-8=24, 2-7=-20
Horz: 1-2=-19, 2-3=-12, 3-4=32, 6-7=32, 7-8=38
Concentrated Loads (lb)
Vert: 3=-295(F) 10=-227(F) 12=-181(F) 4=-421(F=-143) 11=-181(F) 5=-421(F=-143) 14=-383(F=-131) 15=-505(F=-150) 16=-383(F=-131) 17=-319(F) 18=-37(F) 19=-37(F) 20=-37(F) 21=-227(F) 22=-182(F) 23=-37(F) 24=-37(F) 25=-37(F)

33) Reversal: Dead + 0.75 Roof Live (bal.) + 0.75(0.6 MWFRS Wind (Neg. Int) Left): Lumber Increase=1.60, Plate Increase=1.60
Uniform Loads (plf)
Vert: 1-2=-59, 2-3=-63, 3-6=-42, 6-7=-42, 7-8=-37, 2-7=-20
Horz: 1-2=7, 2-3=12, 3-4=9, 6-7=9, 7-8=14
Concentrated Loads (lb)
Vert: 3=-245(F) 10=-248(F) 12=-202(F) 4=-375(F=-143) 11=-202(F) 5=-375(F=-143) 14=-328(F=-131) 15=-481(F=-150) 16=-328(F=-131) 17=-271(F) 18=-37(F) 19=-37(F) 20=-37(F) 21=-248(F) 22=-202(F) 23=-37(F) 24=-37(F) 25=-37(F)

34) Reversal: Dead + 0.75 Roof Live (bal.) + 0.75(0.6 MWFRS Wind (Neg. Int) Right): Lumber Increase=1.60, Plate Increase=1.60

City of Portland
REVIEWED FOR CODE COMPLIANCE
APR 24 2017
Permit Number

Continued on page 5

LOAD CASE(S) Standard

Uniform Loads (plf)

Vert: 1-2=-37, 2-3=-42, 3-6=-28, 6-7=-63, 7-8=-59, 2-7=-20

Horz: 1-2=-14, 2-3=-9, 3-4=24, 6-7=-12, 7-8=-7

Concentrated Loads (lb)

Vert: 3=-294(F) 10=-248(F) 12=-202(F) 4=-403(F=-143) 11=-202(F) 5=-403(F=-143) 14=-355(F=-131) 15=-510(F=-150) 16=-355(F=-131) 17=-276(F) 18=-37(F) 19=-37(F) 20=-37(F) 21=-248(F) 22=-202(F) 23=-37(F) 24=-37(F) 25=-37(F)

35) Reversal: Dead + 0.75 Roof Live (bal.) + 0.75(0.6 MWFRS Wind (Neg. Int) 1st Parallel): Lumber Increase=1.60, Plate Increase=1.60

Uniform Loads (plf)

Vert: 1-2=-23, 2-3=-28, 3-6=-42, 6-7=-42, 7-8=-37, 2-7=-20

Horz: 1-2=-29, 2-3=-24, 3-4=9, 6-7=9, 7-8=14

Concentrated Loads (lb)

Vert: 3=-289(F) 10=-248(F) 12=-202(F) 4=-375(F=-143) 11=-202(F) 5=-375(F=-143) 14=-328(F=-131) 15=-481(F=-150) 16=-328(F=-131) 17=-271(F) 18=-37(F) 19=-37(F) 20=-37(F) 21=-248(F) 22=-202(F) 23=-37(F) 24=-37(F) 25=-37(F)

36) Reversal: Dead + 0.75 Roof Live (bal.) + 0.75(0.6 MWFRS Wind (Neg. Int) 2nd Parallel): Lumber Increase=1.60, Plate Increase=1.60

Uniform Loads (plf)

Vert: 1-2=-37, 2-3=-42, 3-6=-28, 6-7=-28, 7-8=-23, 2-7=-20

Horz: 1-2=-14, 2-3=-9, 3-4=24, 6-7=24, 7-8=29

Concentrated Loads (lb)

Vert: 3=-294(F) 10=-248(F) 12=-202(F) 4=-403(F=-143) 11=-202(F) 5=-403(F=-143) 14=-355(F=-131) 15=-510(F=-150) 16=-355(F=-131) 17=-312(F) 18=-37(F) 19=-37(F) 20=-37(F) 21=-248(F) 22=-202(F) 23=-37(F) 24=-37(F) 25=-37(F)

City of Portland
REVIEWED FOR CODE
COMPLIANCE

APR 2 4 2017

Permit Number

Job	Truss	Truss Type	Qty	Ply	F.I.R.E.
17-CP8204	A02	California	2	1	K2936685 Job Reference (optional)

PRECISION TRUSS & LUMBER, INC., CLACKAMAS,OR. 97015

8.100 s Jan 9 2017 MiTek Industries, Inc. Thu Mar 09 11:23:58 2017 Page 1
ID:Wk6d7S9BXqoyW2Z56Q4BD0zd0Jc-nZTc9_BkjZ6UbxneMrXIFdRdT?e4eC93lzjaubzcg7F

-2-0-0	5-8-8	7-10-3	12-0-0	16-1-13	18-3-8	24-0-0	26-0-0
2-0-0	5-8-8	2-1-11	4-1-13	4-1-13	2-1-11	5-8-8	2-0-0

Scale = 1:46.4

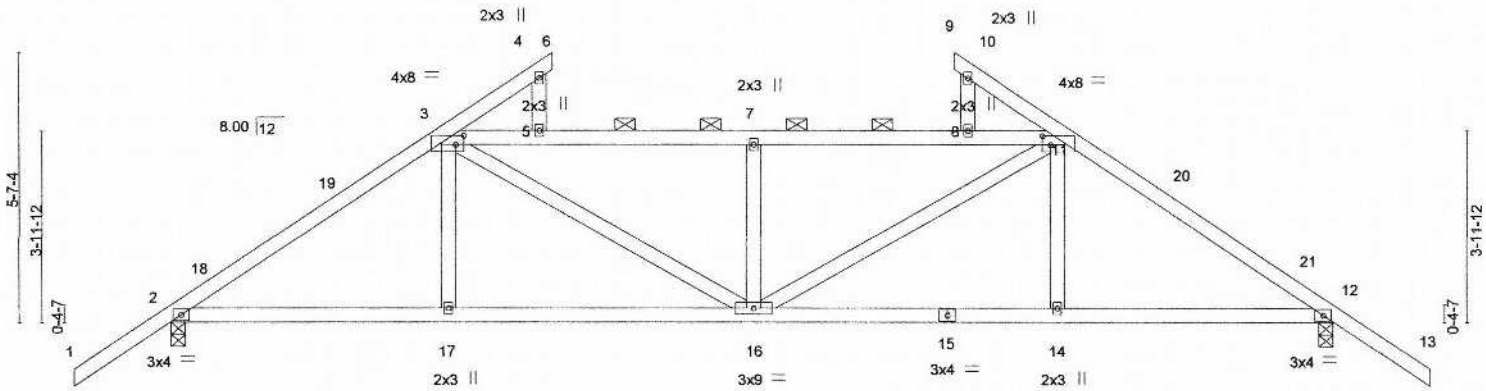

5-8-8	12-0-0	18-3-8	24-0-0
5-8-8	6-3-8	6-3-8	5-8-8

Plate Offsets (X,Y)-- [3:0-2-0,0-2-4], [11:0-2-0,0-2-4]

LOADING (psf)		SPACING-	2-0-0	CSI.		DEFL.	in	(loc)	l/defl	L/d	PLATES	GRIP
TCLL	25.0	Plate Grip DOL	1.15	TC	0.91	Vert(LL)	-0.08	16	>999	240	MT20	185/148
TCDL	7.0	Lumber DOL	1.15	BC	0.40	Vert(TL)	-0.24	14-16	>999	180		
BCLL	0.0 *	Rep Stress Incr	NO	WB	0.49	Horz(TL)	0.06	12	n/a	n/a		
BCDL	10.0	Code IRC2012/TPI2007		Matrix-R							Weight: 113 lb	FT = 0%

LUMBER-
TOP CHORD 2x4 DF No.2
BOT CHORD 2x4 DF No.2
WEBS 2x4 HF Std
OTHERS 2x4 HF Std

BRACING-
TOP CHORD Structural wood sheathing directly applied or 4-2-11 oc purlins, except
2-0-0 oc purlins (3-1-15 max.): 3-11.
BOT CHORD Rigid ceiling directly applied or 10-0-0 oc bracing.

MiTek recommends that Stabilizers and required cross bracing be installed during truss erection, in accordance with Stabilizer Installation guide.

REACTIONS. (lb/size) 2=1314/0-3-8, 12=1314/0-3-8
Max Horz 2=187(LC 11)
Max Uplift 2=-112(LC 12), 12=-112(LC 13)

FORCES. (lb) - Max. Comp./Max. Ten. - All forces 250 (lb) or less except when shown.
TOP CHORD 2-3=-1805/9, 3-5=-2150/7, 5-7=-2162/8, 7-8=-2162/8, 8-11=-2150/7, 11-12=-1805/0
BOT CHORD 2-17=0/1420, 16-17=0/1422, 14-16=0/1422, 12-14=0/1420
WEBS 3-16=0/964, 7-16=-769/0, 11-16=0/964

NOTES-
1) Unbalanced roof live loads have been considered for this design.
2) Wind: ASCE 7-10; Vult=120mph (3-second gust) V(IRC2012)=95mph; TCDL=4.2psf; BCDL=6.0psf; h=25ft; Cat. II; Exp C; enclosed; MWFRS (envelope) automatic zone and C-C Exterior(2) -2-0-0 to 1-0-0, Interior(1) 1-0-0 to 7-10-3, Exterior(2) 7-6-15 to 20-4-12, Interior(1) 20-4-12 to 26-0-0 zone; cantilever left and right exposed ; end vertical left and right exposed;C-C for members and forces & MWFRS for reactions shown; Lumber DOL=1.60 plate grip DOL=1.60
3) Provide adequate drainage to prevent water ponding.
4) This truss has been designed for a 10.0 psf bottom chord live load nonconcurrent with any other live loads.
5) * This truss has been designed for a live load of 20.0psf on the bottom chord in all areas where a rectangle 3-6-0 tall by 2-0-0 wide will fit between the bottom chord and any other members.
6) Provide mechanical connection (by others) of truss to bearing plate capable of withstanding 100 lb uplift at joint(s) except (jt=lb) 2=112, 12=112.
7) Load case(s) 1, 2, 3, 4, 5, 6, 7, 8, 9, 10, 11, 12, 13, 14, 15, 16, 17, 18, 19, 20, 21, 22, 23, 24, 25, 26 has/have been modified. Building designer must review loads to verify that they are correct for the intended use of this truss.
8) Graphical purlin representation does not depict the size or the orientation of the purlin along the top and/or bottom chord.
9) In the LOAD CASE(S) section, loads applied to the face of the truss are noted as front (F) or back (B).

LOAD CASE(S) Standard
1) Dead + Roof Live (balanced): Lumber Increase=1.15, Plate Increase=1.15
Uniform Loads (plf)
Vert: 1-3=-64, 3-4=-64, 4-6=-14, 5-8=-104(F=-40), 9-10=-14, 10-11=-64, 11-13=-64, 2-12=-20

City of Portland
REVIEWED FOR CODE COMPLIANCE
APR 24 2017
Permit Number

REGISTERED PROFESSIONAL ENGINEER
89200PE
OREGON
MAY 14, 2014
DAVID MERRILL BAXTER

EXPIRES: 12/31/2017
March 9,2017

Continued on page 2

MiTek
250 Klug Circle
Corona, CA 92880

LOAD CASE(S) Standard

2) Dead + 0.75 Roof Live (balanced): Lumber Increase=1.15, Plate Increase=1.15
Uniform Loads (plf)
Vert: 1-3=-52, 3-4=-51, 4-6=-14, 5-8=-91(F=-40), 9-10=-14, 10-11=-51, 11-13=-52, 2-12=-20

3) Dead + Uninhabitable Attic Without Storage: Lumber Increase=1.25, Plate Increase=1.25
Uniform Loads (plf)
Vert: 1-3=-14, 3-6=-14, 5-8=-54(F=-40), 9-11=-14, 11-13=-14, 2-12=-40

4) Dead + 0.6 C-C Wind (Pos. Internal) Case 1: Lumber Increase=1.60, Plate Increase=1.60
Uniform Loads (plf)
Vert: 1-2=56, 2-18=34, 3-18=26, 3-4=26, 4-6=-8, 5-7=-3(F=-40), 7-8=-10(F=-40), 9-10=27, 10-11=34, 11-20=34, 12-20=26, 12-13=20, 2-12=-12
Horz: 1-2=-64, 2-18=-42, 3-18=-35, 3-4=-35, 9-10=36, 10-11=42, 11-20=42, 12-20=35, 12-13=28

5) Dead + 0.6 C-C Wind (Pos. Internal) Case 2: Lumber Increase=1.60, Plate Increase=1.60
Uniform Loads (plf)
Vert: 1-2=20, 2-19=26, 3-19=34, 3-4=34, 4-6=27, 5-7=-10(F=-40), 7-8=-3(F=-40), 9-10=-8, 10-11=26, 11-21=26, 12-21=34, 12-13=56, 2-12=-12
Horz: 1-2=-28, 2-19=-35, 3-19=-42, 3-4=-42, 4-6=-36, 10-11=35, 11-21=35, 12-21=42, 12-13=64

6) Dead + 0.6 C-C Wind (Neg. Internal) Case 1: Lumber Increase=1.60, Plate Increase=1.60
Uniform Loads (plf)
Vert: 1-2=14, 2-3=-49, 3-4=-49, 4-6=-14, 5-8=-68(F=-40), 9-10=-42, 10-11=-49, 11-12=-49, 12-13=-42, 2-12=-20
Horz: 1-2=-28, 2-3=35, 3-4=35, 9-10=-28, 10-11=-35, 11-12=-35, 12-13=-28

7) Dead + 0.6 C-C Wind (Neg. Internal) Case 2: Lumber Increase=1.60, Plate Increase=1.60
Uniform Loads (plf)
Vert: 1-2=-42, 2-3=-49, 3-4=-49, 4-6=-42, 5-8=-68(F=-40), 9-10=-14, 10-11=-49, 11-12=-49, 12-13=14, 2-12=-20
Horz: 1-2=28, 2-3=35, 3-4=35, 4-6=28, 10-11=-35, 11-12=-35, 12-13=28

8) Dead + 0.6 MWFRS Wind (Pos. Internal) Left: Lumber Increase=1.60, Plate Increase=1.60
Uniform Loads (plf)
Vert: 1-2=3, 2-3=-12, 3-4=-12, 4-6=-18, 5-8=-4(F=-40), 9-10=10, 10-11=17, 11-12=17, 12-13=10, 2-12=-12
Horz: 1-2=-12, 2-3=3, 3-4=3, 4-6=10, 9-10=19, 10-11=25, 11-12=25, 12-13=19

9) Dead + 0.6 MWFRS Wind (Pos. Internal) Right: Lumber Increase=1.60, Plate Increase=1.60
Uniform Loads (plf)
Vert: 1-2=10, 2-3=17, 3-4=17, 4-6=10, 5-8=-4(F=-40), 9-10=-18, 10-11=-12, 11-12=-12, 12-13=3, 2-12=-12
Horz: 1-2=-19, 2-3=-25, 3-4=-25, 4-6=-19, 9-10=-10, 10-11=-3, 11-12=-3, 12-13=12

10) Dead + 0.6 MWFRS Wind (Neg. Internal) Left: Lumber Increase=1.60, Plate Increase=1.60
Uniform Loads (plf)
Vert: 1-2=-24, 2-3=-30, 3-4=-30, 4-6=-24, 5-8=-22(F=-40), 9-10=5, 10-11=-2, 11-12=-2, 12-13=5, 2-12=-20
Horz: 1-2=10, 2-3=16, 3-4=16, 4-6=10, 9-10=19, 10-11=12, 11-12=12, 12-13=19

11) Dead + 0.6 MWFRS Wind (Neg. Internal) Right: Lumber Increase=1.60, Plate Increase=1.60
Uniform Loads (plf)
Vert: 1-2=5, 2-3=-2, 3-4=-2, 4-6=5, 5-8=-22(F=-40), 9-10=-24, 10-11=-30, 11-12=-30, 12-13=-24, 2-12=-20
Horz: 1-2=-19, 2-3=-12, 3-4=-12, 4-6=-19, 9-10=-10, 10-11=-16, 11-12=-16, 12-13=-10

12) Dead + 0.6 MWFRS Wind (Pos. Internal) 1st Parallel: Lumber Increase=1.60, Plate Increase=1.60
Uniform Loads (plf)
Vert: 1-2=30, 2-3=36, 3-4=36, 4-6=30, 5-7=-4(F=-40), 7-8=-23(F=-40), 9-10=10, 10-11=17, 11-12=17, 12-13=10, 2-12=-12
Horz: 1-2=-38, 2-3=-44, 3-4=-44, 4-6=-38, 9-10=19, 10-11=25, 11-12=25, 12-13=19

13) Dead + 0.6 MWFRS Wind (Pos. Internal) 2nd Parallel: Lumber Increase=1.60, Plate Increase=1.60
Uniform Loads (plf)
Vert: 1-2=10, 2-3=17, 3-4=17, 4-6=10, 5-7=-23(F=-40), 7-8=-4(F=-40), 9-10=30, 10-11=36, 11-12=36, 12-13=30, 2-12=-12
Horz: 1-2=-19, 2-3=-25, 3-4=-25, 4-6=-19, 9-10=38, 10-11=44, 11-12=44, 12-13=38

14) Dead + 0.6 MWFRS Wind (Pos. Internal) 3rd Parallel: Lumber Increase=1.60, Plate Increase=1.60
Uniform Loads (plf)
Vert: 1-2=16, 2-3=23, 3-4=23, 4-6=16, 5-7=-17(F=-40), 7-8=-29(F=-40), 9-10=5, 10-11=11, 11-12=11, 12-13=5, 2-12=-12
Horz: 1-2=-25, 2-3=-31, 3-4=-31, 4-6=-25, 9-10=13, 10-11=20, 11-12=20, 12-13=13

15) Dead + 0.6 MWFRS Wind (Pos. Internal) 4th Parallel: Lumber Increase=1.60, Plate Increase=1.60
Uniform Loads (plf)
Vert: 1-2=5, 2-3=11, 3-4=11, 4-6=5, 5-7=-29(F=-40), 7-8=-17(F=-40), 9-10=16, 10-11=23, 11-12=23, 12-13=16, 2-12=-12
Horz: 1-2=-13, 2-3=-20, 3-4=-20, 4-6=-13, 9-10=25, 10-11=31, 11-12=31, 12-13=25

16) Dead + 0.6 MWFRS Wind (Neg. Internal) 1st Parallel: Lumber Increase=1.60, Plate Increase=1.60
Uniform Loads (plf)
Vert: 1-2=24, 2-3=18, 3-4=18, 4-6=24, 5-7=-22(F=-40), 7-8=-42(F=-40), 9-10=5, 10-11=-2, 11-12=-2, 12-13=5, 2-12=-20
Horz: 1-2=-38, 2-3=-32, 3-4=-32, 4-6=-38, 9-10=19, 10-11=12, 11-12=12, 12-13=19

17) Dead + 0.6 MWFRS Wind (Neg. Internal) 2nd Parallel: Lumber Increase=1.60, Plate Increase=1.60
Uniform Loads (plf)
Vert: 1-2=5, 2-3=-2, 3-4=-2, 4-6=5, 5-7=-42(F=-40), 7-8=-22(F=-40), 9-10=24, 10-11=18, 11-12=18, 12-13=24, 2-12=-20
Horz: 1-2=-19, 2-3=-12, 3-4=-12, 4-6=-19, 9-10=38, 10-11=32, 11-12=32, 12-13=38

18) Dead: Lumber Increase=0.90, Plate Increase=0.90 Plt. metal=0.90
Uniform Loads (plf)
Vert: 1-3=-14, 3-6=-14, 5-8=-54(F=-40), 9-11=-14, 11-13=-14, 2-12=-20

19) Dead + 0.75 Roof Live (bal.) + 0.75(0.6 MWFRS Wind (Neg. Int) Left): Lumber Increase=1.60, Plate Increase=1.60
Uniform Loads (plf)
Vert: 1-2=-59, 2-3=-63, 3-4=-63, 4-6=-21, 5-8=-68(F=-40), 9-10=0, 10-11=-42, 11-12=-42, 12-13=-37, 2-12=-20
Horz: 1-2=7, 2-3=12, 3-4=12, 4-6=7, 9-10=14, 10-11=9, 11-12=9, 12-13=14

20) Dead + 0.75 Roof Live (bal.) + 0.75(0.6 MWFRS Wind (Neg. Int) Right): Lumber Increase=1.60, Plate Increase=1.60
Uniform Loads (plf)
Vert: 1-2=-37, 2-3=-42, 3-4=-42, 4-6=0, 5-8=-68(F=-40), 9-10=-21, 10-11=-63, 11-12=-63, 12-13=-59, 2-12=-20
Horz: 1-2=-14, 2-3=-9, 3-4=-9, 4-6=-14, 9-10=-7, 10-11=-12, 11-12=-12, 12-13=-7

21) Dead + 0.75 Roof Live (bal.) + 0.75(0.6 MWFRS Wind (Neg. Int) 1st Parallel): Lumber Increase=1.60, Plate Increase=1.60

City of Portland
REVIEWED FOR CODE COMPLIANCE
APR 24 2017
Permit Number

Continued on page 3

LOAD CASE(S) Standard

Uniform Loads (plf)

Vert: 1-2=-23, 2-3=-28, 3-4=-28, 4-6=15, 5-7=-68(F=-40), 7-8=-82(F=-40), 9-10=0, 10-11=-42, 11-12=-42, 12-13=-37, 2-12=-20

Horz: 1-2=-29, 2-3=-24, 3-4=-24, 4-6=-29, 9-10=14, 10-11=9, 11-12=9, 12-13=14

22) Dead + 0.75 Roof Live (bal.) + 0.75(0.6 MWFRS Wind (Neg. Int) 2nd Parallel): Lumber Increase=1.60, Plate Increase=1.60

Uniform Loads (plf)

Vert: 1-2=-37, 2-3=-42, 3-4=-42, 4-6=0, 5-7=-82(F=-40), 7-8=-68(F=-40), 9-10=15, 10-11=-28, 11-12=-28, 12-13=-23, 2-12=-20

Horz: 1-2=-14, 2-3=-9, 3-4=-9, 4-6=-14, 9-10=29, 10-11=24, 11-12=24, 12-13=29

23) 1st Dead + Roof Live (unbalanced): Lumber Increase=1.15, Plate Increase=1.15

Uniform Loads (plf)

Vert: 1-3=-64, 3-4=-64, 4-6=-14, 5-8=-104(F=-40), 9-11=-14, 11-13=-14, 2-12=-20

24) 2nd Dead + Roof Live (unbalanced): Lumber Increase=1.15, Plate Increase=1.15

Uniform Loads (plf)

Vert: 1-3=-14, 3-6=-14, 5-8=-104(F=-40), 9-10=-14, 10-11=-64, 11-13=-64, 2-12=-20

25) 3rd Dead + 0.75 Roof Live (unbalanced): Lumber Increase=1.15, Plate Increase=1.15

Uniform Loads (plf)

Vert: 1-3=-52, 3-4=-51, 4-6=-14, 5-8=-91(F=-40), 9-11=-14, 11-13=-14, 2-12=-20

26) 4th Dead + 0.75 Roof Live (unbalanced): Lumber Increase=1.15, Plate Increase=1.15

Uniform Loads (plf)

Vert: 1-3=-14, 3-6=-14, 5-8=-91(F=-40), 9-10=-14, 10-11=-51, 11-13=-52, 2-12=-20

City of Portland
REVIEWED FOR CODE
COMPLIANCE

APR 2 4 2017

Permit Number

Job	Truss	Truss Type	Qty	Ply	F.I.R.E.
17-CP8204	A03	California	2	1	K2936686
					Job Reference (optional)

PRECISION TRUSS & LUMBER, INC., CLACKAMAS,OR. 97015

8.100 s Jan 9 2017 MiTek Industries, Inc. Thu Mar 09 11:23:59 2017 Page 1
ID:Wk6d7S9BXqoyW2Z56Q4BD0zd0Jc-Fm1_NKCMUtELC5MrwZ2Xnr_r9PzYNgHC_dS7Q1zcg7E

-2-0-0	5-8-8	9-10-3	12-0-0	14-1-13	18-3-8	24-0-0	26-0-0
2-0-0	5-8-8	4-1-11	2-1-13	2-1-13	4-1-11	5-8-8	2-0-0

Scale = 1:46.4

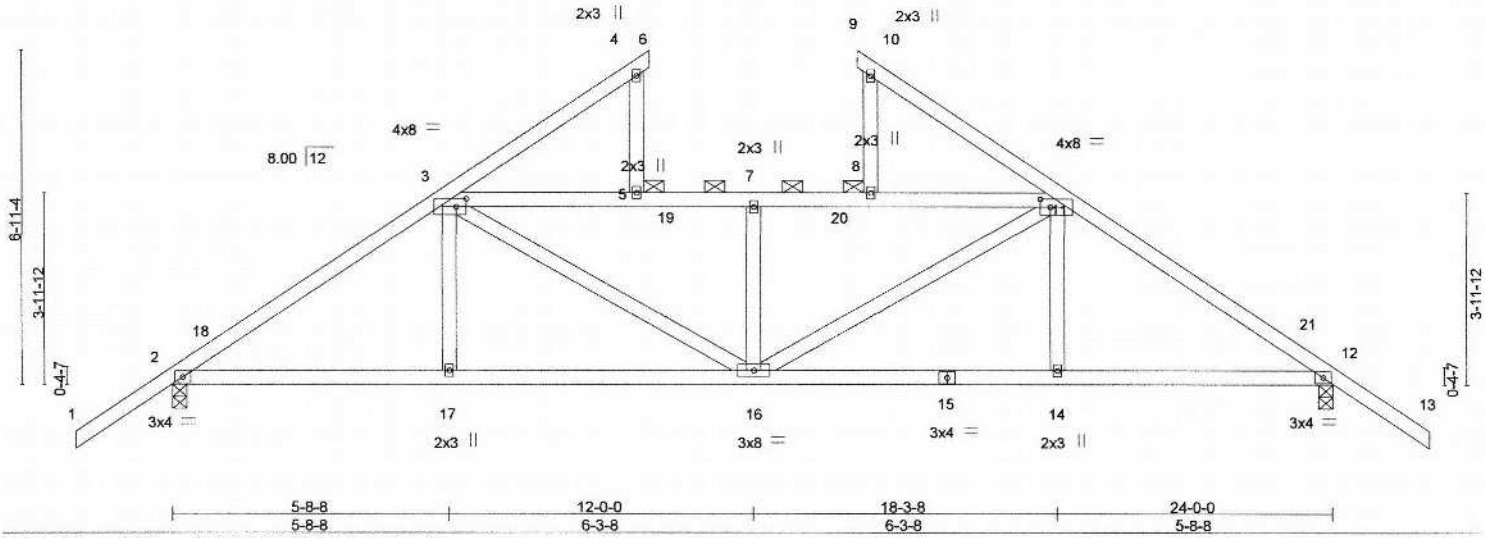

5-8-8	12-0-0	18-3-8	24-0-0
5-8-8	6-3-8	6-3-8	5-8-8

Plate Offsets (X,Y)-- [3:0-2-8,0-2-0], [11:0-2-8,0-2-0]

LOADING (psf)		SPACING-	2-0-0	CSI.		DEFL.	in	(loc)	l/defl	L/d	PLATES	GRIP
TCLL	25.0	Plate Grip DOL	1.15	TC	0.72	Vert(LL)	-0.07	16	>999	240	MT20	185/148
TCDL	7.0	Lumber DOL	1.15	BC	0.38	Vert(TL)	-0.19	14-16	>999	180		
BCLL	0.0 *	Rep Stress Incr	NO	WB	0.44	Horz(TL)	0.05	12	n/a	n/a		
BCDL	10.0	Code IRC2012/TPI2007		Matrix-R							Weight: 123 lb	FT = 0%

LUMBER-

TOP CHORD	2x4 DF No.2
BOT CHORD	2x4 DF No.2
WEBS	2x4 HF Std
OTHERS	2x4 HF Std

BRACING-

TOP CHORD	Structural wood sheathing directly applied or 4-9-14 oc purlins, except 2-0-0 oc purlins (3-9-1 max.): 3-11.
BOT CHORD	Rigid ceiling directly applied or 10-0-0 oc bracing.

MiTek recommends that Stabilizers and required cross bracing be installed during truss erection, in accordance with Stabilizer Installation guide.

REACTIONS. (lb/size) 2=1234/0-3-8, 12=1234/0-3-8
Max Horz 2=-225(LC 10)
Max Uplift 2=-185(LC 12), 12=-185(LC 13)

FORCES. (lb) - Max. Comp./Max. Ten. - All forces 250 (lb) or less except when shown.

TOP CHORD	2-3=-1649/142, 3-5=-1950/289, 5-7=-1952/290, 7-8=-1952/290, 8-11=-1950/289, 11-12=-1649/142
BOT CHORD	2-17=-107/1282, 16-17=-106/1283, 14-16=-5/1283, 12-14=-6/1282
WEBS	3-17=0/251, 3-16=-60/854, 7-16=-684/106, 11-16=-60/854, 11-14=0/251

City of Portland
REVIEWED FOR CODE COMPLIANCE
APR 24 2017
Permit Number

NOTES-

1) Unbalanced roof live loads have been considered for this design.
2) Wind: ASCE 7-10; Vult=120mph (3-second gust) V(IRC2012)=95mph; TCDL=4.2psf; BCDL=6.0psf; h=25ft; Cat. II; Exp C; enclosed; MWFRS (envelope) automatic zone and C-C Exterior(2) -2-0-0 to 1-0-0, Interior(1) 1-0-0 to 9-10-3, Exterior(2) 9-6-15 to 18-4-1, Interior(1) 18-4-1 to 26-0-0 zone; cantilever left and right exposed ; end vertical left and right exposed;C-C for members and forces & MWFRS for reactions shown; Lumber DOL=1.60 plate grip DOL=1.60
3) Provide adequate drainage to prevent water ponding.
4) This truss has been designed for a 10.0 psf bottom chord live load nonconcurrent with any other live loads.
5) * This truss has been designed for a live load of 20.0psf on the bottom chord in all areas where a rectangle 3-6-0 tall by 2-0-0 wide will fit between the bottom chord and any other members.
6) Provide mechanical connection (by others) of truss to bearing plate capable of withstanding 100 lb uplift at joint(s) except (jt=lb) 2=185, 12=185.
7) Load case(s) 1, 2, 3, 4, 5, 6, 7, 8, 9, 10, 11, 12, 13, 14, 15, 16, 17, 18, 19, 20, 21, 22, 23, 24, 25, 26 has/have been modified. Building designer must review loads to verify that they are correct for the intended use of this truss.
8) Graphical purlin representation does not depict the size or the orientation of the purlin along the top and/or bottom chord.
9) In the LOAD CASE(S) section, loads applied to the face of the truss are noted as front (F) or back (B).

REGISTERED PROFESSIONAL ENGINEER
89200PE
OREGON
MAY 14, 2014
DAVID MERRILL BAXTER

LOAD CASE(S) Standard
1) Dead + Roof Live (balanced): Lumber Increase=1.15, Plate Increase=1.15
Uniform Loads (plf)
Vert: 1-3=-64, 3-4=-64, 4-6=-14, 5-8=-104(F=-40), 9-10=-14, 10-11=-64, 11-13=-64, 2-12=-20

EXPIRES: 12/31/2017
March 9,2017

Continued on page 2

MiTek
250 Klug Circle
Corona, CA 92880

LOAD CASE(S) Standard

2) Dead + 0.75 Roof Live (balanced): Lumber Increase=1.15, Plate Increase=1.15
Uniform Loads (plf)
Vert: 1-3=-52, 3-4=-51, 4-6=-14, 5-8=-91(F=-40), 9-10=-14, 10-11=-52, 11-13=-52, 2-12=-20

3) Dead + Uninhabitable Attic Without Storage: Lumber Increase=1.25, Plate Increase=1.25
Uniform Loads (plf)
Vert: 1-3=-14, 3-6=-14, 5-8=-54(F=-40), 9-11=-14, 11-13=-14, 2-12=-40

4) Dead + 0.6 C-C Wind (Pos. Internal) Case 1: Lumber Increase=1.60, Plate Increase=1.60
Uniform Loads (plf)
Vert: 1-2=56, 2-18=34, 3-18=26, 3-4=26, 4-6=-8, 5-20=-3(F=-40), 8-20=-10(F=-40), 9-10=27, 10-11=34, 11-12=26, 12-13=20, 2-12=-12
Horz: 1-2=-64, 2-18=-42, 3-18=-35, 3-4=-35, 9-10=36, 10-11=42, 11-12=35, 12-13=28

5) Dead + 0.6 C-C Wind (Pos. Internal) Case 2: Lumber Increase=1.60, Plate Increase=1.60
Uniform Loads (plf)
Vert: 1-2=20, 2-3=26, 3-4=34, 4-6=27, 5-19=-10(F=-40), 8-19=-3(F=-40), 9-10=-8, 10-11=26, 11-21=26, 12-21=34, 12-13=56, 2-12=-12
Horz: 1-2=-28, 2-3=-35, 3-4=-42, 4-6=-36, 10-11=35, 11-21=35, 12-21=42, 12-13=64

6) Dead + 0.6 C-C Wind (Neg. Internal) Case 1: Lumber Increase=1.60, Plate Increase=1.60
Uniform Loads (plf)
Vert: 1-2=14, 2-3=-49, 3-4=-49, 4-6=-14, 5-8=-68(F=-40), 9-10=-42, 10-11=-49, 11-12=-49, 12-13=-42, 2-12=-20
Horz: 1-2=-28, 2-3=35, 3-4=35, 9-10=-28, 10-11=-35, 11-12=-35, 12-13=-28

7) Dead + 0.6 C-C Wind (Neg. Internal) Case 2: Lumber Increase=1.60, Plate Increase=1.60
Uniform Loads (plf)
Vert: 1-2=-42, 2-3=-49, 3-4=-49, 4-6=-42, 5-8=-68(F=-40), 9-10=-14, 10-11=-49, 11-12=-49, 12-13=14, 2-12=-20
Horz: 1-2=28, 2-3=35, 3-4=35, 4-6=28, 10-11=-35, 11-12=-35, 12-13=28

8) Dead + 0.6 MWFRS Wind (Pos. Internal) Left: Lumber Increase=1.60, Plate Increase=1.60
Uniform Loads (plf)
Vert: 1-2=3, 2-3=-12, 3-4=-12, 4-6=-18, 5-8=-4(F=-40), 9-10=10, 10-11=17, 11-12=17, 12-13=10, 2-12=-12
Horz: 1-2=-12, 2-3=3, 3-4=3, 4-6=10, 9-10=19, 10-11=25, 11-12=25, 12-13=19

9) Dead + 0.6 MWFRS Wind (Pos. Internal) Right: Lumber Increase=1.60, Plate Increase=1.60
Uniform Loads (plf)
Vert: 1-2=10, 2-3=17, 3-4=17, 4-6=10, 5-8=-4(F=-40), 9-10=-18, 10-11=-12, 11-12=-12, 12-13=3, 2-12=-12
Horz: 1-2=-19, 2-3=-25, 3-4=-25, 4-6=-19, 9-10=-10, 10-11=-3, 11-12=-3, 12-13=12

10) Dead + 0.6 MWFRS Wind (Neg. Internal) Left: Lumber Increase=1.60, Plate Increase=1.60
Uniform Loads (plf)
Vert: 1-2=-24, 2-3=-30, 3-4=-30, 4-6=-24, 5-8=-22(F=-40), 9-10=5, 10-11=-2, 11-12=-2, 12-13=5, 2-12=-20
Horz: 1-2=10, 2-3=16, 3-4=16, 4-6=10, 9-10=19, 10-11=12, 11-12=12, 12-13=19

11) Dead + 0.6 MWFRS Wind (Neg. Internal) Right: Lumber Increase=1.60, Plate Increase=1.60
Uniform Loads (plf)
Vert: 1-2=5, 2-3=-2, 3-4=-2, 4-6=5, 5-8=-22(F=-40), 9-10=-24, 10-11=-30, 11-12=-30, 12-13=-24, 2-12=-20
Horz: 1-2=-19, 2-3=-12, 3-4=-12, 4-6=-19, 9-10=-10, 10-11=-16, 11-12=-16, 12-13=-10

12) Dead + 0.6 MWFRS Wind (Pos. Internal) 1st Parallel: Lumber Increase=1.60, Plate Increase=1.60
Uniform Loads (plf)
Vert: 1-2=30, 2-3=36, 3-4=36, 4-6=30, 5-7=-4(F=-40), 7-8=-23(F=-40), 9-10=10, 10-11=17, 11-12=17, 12-13=10, 2-12=-12
Horz: 1-2=-38, 2-3=-44, 3-4=-44, 4-6=-38, 9-10=19, 10-11=25, 11-12=25, 12-13=19

13) Dead + 0.6 MWFRS Wind (Pos. Internal) 2nd Parallel: Lumber Increase=1.60, Plate Increase=1.60
Uniform Loads (plf)
Vert: 1-2=10, 2-3=17, 3-4=17, 4-6=10, 5-7=-23(F=-40), 7-8=-4(F=-40), 9-10=30, 10-11=36, 11-12=36, 12-13=30, 2-12=-12
Horz: 1-2=-19, 2-3=-25, 3-4=-25, 4-6=-19, 9-10=38, 10-11=44, 11-12=44, 12-13=38

14) Dead + 0.6 MWFRS Wind (Pos. Internal) 3rd Parallel: Lumber Increase=1.60, Plate Increase=1.60
Uniform Loads (plf)
Vert: 1-2=16, 2-3=23, 3-4=23, 4-6=16, 5-7=-17(F=-40), 7-8=-29(F=-40), 9-10=5, 10-11=11, 11-12=11, 12-13=5, 2-12=-12
Horz: 1-2=-25, 2-3=-31, 3-4=-31, 4-6=-25, 9-10=13, 10-11=20, 11-12=20, 12-13=13

15) Dead + 0.6 MWFRS Wind (Pos. Internal) 4th Parallel: Lumber Increase=1.60, Plate Increase=1.60
Uniform Loads (plf)
Vert: 1-2=5, 2-3=11, 3-4=11, 4-6=5, 5-7=-29(F=-40), 7-8=-17(F=-40), 9-10=16, 10-11=23, 11-12=23, 12-13=16, 2-12=-12
Horz: 1-2=-13, 2-3=-20, 3-4=-20, 4-6=-13, 9-10=25, 10-11=31, 11-12=31, 12-13=25

16) Dead + 0.6 MWFRS Wind (Neg. Internal) 1st Parallel: Lumber Increase=1.60, Plate Increase=1.60
Uniform Loads (plf)
Vert: 1-2=24, 2-3=18, 3-4=18, 4-6=24, 5-7=-22(F=-40), 7-8=-42(F=-40), 9-10=5, 10-11=-2, 11-12=-2, 12-13=5, 2-12=-20
Horz: 1-2=-38, 2-3=-32, 3-4=-32, 4-6=-38, 9-10=19, 10-11=12, 11-12=12, 12-13=19

17) Dead + 0.6 MWFRS Wind (Neg. Internal) 2nd Parallel: Lumber Increase=1.60, Plate Increase=1.60
Uniform Loads (plf)
Vert: 1-2=5, 2-3=-2, 3-4=-2, 4-6=5, 5-7=-42(F=-40), 7-8=-22(F=-40), 9-10=24, 10-11=18, 11-12=18, 12-13=24, 2-12=-20
Horz: 1-2=-19, 2-3=-12, 3-4=-12, 4-6=-19, 9-10=38, 10-11=32, 11-12=32, 12-13=38

18) Dead: Lumber Increase=0.90, Plate Increase=0.90 Plt. metal=0.90
Uniform Loads (plf)
Vert: 1-3=-14, 3-6=-14, 5-8=-54(F=-40), 9-11=-14, 11-13=-14, 2-12=-20

19) Dead + 0.75 Roof Live (bal.) + 0.75(0.6 MWFRS Wind (Neg. Int) Left): Lumber Increase=1.60, Plate Increase=1.60
Uniform Loads (plf)
Vert: 1-2=-59, 2-3=-63, 3-4=-63, 4-6=-21, 5-8=-68(F=-40), 9-10=0, 10-11=-42, 11-12=-42, 12-13=-37, 2-12=-20
Horz: 1-2=7, 2-3=12, 3-4=12, 4-6=7, 9-10=14, 10-11=9, 11-12=9, 12-13=14

20) Dead + 0.75 Roof Live (bal.) + 0.75(0.6 MWFRS Wind (Neg. Int) Right): Lumber Increase=1.60, Plate Increase=1.60
Uniform Loads (plf)
Vert: 1-2=-37, 2-3=-42, 3-4=-42, 4-6=0, 5-8=-68(F=-40), 9-10=-21, 10-11=-63, 11-12=-63, 12-13=-59, 2-12=-20
Horz: 1-2=-14, 2-3=-9, 3-4=-9, 4-6=-14, 9-10=-7, 10-11=-12, 11-12=-12, 12-13=-7

21) Dead + 0.75 Roof Live (bal.) + 0.75(0.6 MWFRS Wind (Neg. Int) 1st Parallel): Lumber Increase=1.60, Plate Increase=1.60

City of Portland
REVIEWED FOR CODE COMPLIANCE
APR 24 2017
Permit Number

Continued on page 3

LOAD CASE(S) Standard

Uniform Loads (plf)

Vert: 1-2=-23, 2-3=-28, 3-4=-28, 4-6=15, 5-7=-68(F=-40), 7-8=-82(F=-40), 9-10=0, 10-11=-42, 11-12=-42, 12-13=-37, 2-12=-20

Horz: 1-2=-29, 2-3=-24, 3-4=-24, 4-6=-29, 9-10=14, 10-11=9, 11-12=9, 12-13=14

22) Dead + 0.75 Roof Live (bal.) + 0.75(0.6 MWFRS Wind (Neg. Int) 2nd Parallel): Lumber Increase=1.60, Plate Increase=1.60

Uniform Loads (plf)

Vert: 1-2=-37, 2-3=-42, 3-4=-42, 4-6=0, 5-7=-82(F=-40), 7-8=-68(F=-40), 9-10=15, 10-11=-28, 11-12=-28, 12-13=-23, 2-12=-20

Horz: 1-2=-14, 2-3=-9, 3-4=-9, 4-6=-14, 9-10=29, 10-11=24, 11-12=24, 12-13=29

23) 1st Dead + Roof Live (unbalanced): Lumber Increase=1.15, Plate Increase=1.15

Uniform Loads (plf)

Vert: 1-3=-64, 3-4=-64, 4-6=-14, 5-8=-104(F=-40), 9-11=-14, 11-13=-14, 2-12=-20

24) 2nd Dead + Roof Live (unbalanced): Lumber Increase=1.15, Plate Increase=1.15

Uniform Loads (plf)

Vert: 1-3=-14, 3-6=-14, 5-8=-104(F=-40), 9-10=-14, 10-11=-64, 11-13=-64, 2-12=-20

25) 3rd Dead + 0.75 Roof Live (unbalanced): Lumber Increase=1.15, Plate Increase=1.15

Uniform Loads (plf)

Vert: 1-3=-52, 3-4=-51, 4-6=-14, 5-8=-91(F=-40), 9-11=-14, 11-13=-14, 2-12=-20

26) 4th Dead + 0.75 Roof Live (unbalanced): Lumber Increase=1.15, Plate Increase=1.15

Uniform Loads (plf)

Vert: 1-3=-14, 3-6=-14, 5-8=-91(F=-40), 9-10=-14, 10-11=-52, 11-13=-52, 2-12=-20

City of Portland
REVIEWED FOR CODE
COMPLIANCE

APR 2 4 2017

Permit Number

Job	Truss	Truss Type	Qty	Ply	F.I.R.E.
17-CP8204	A04	Roof Special	3	1	K2936687 Job Reference (optional)

PRECISION TRUSS & LUMBER, INC., CLACKAMAS,OR. 97015

8.100 s Jan 9 2017 MiTek Industries, Inc. Thu Mar 09 11:23:59 2017 Page 1
ID:Wk6d7S9BXqoyW2Z56Q4BD0zd0Jc-Fm1_NKCMUtELC5MrwZ2Xnr_xYPyqNiWC_dS7Q1zcg7E

-2-0-0	6-2-7	12-0-0	17-9-9	24-0-0	26-0-0
2-0-0	6-2-7	5-9-9	5-9-9	6-2-7	2-0-0

Scale = 1:52.2

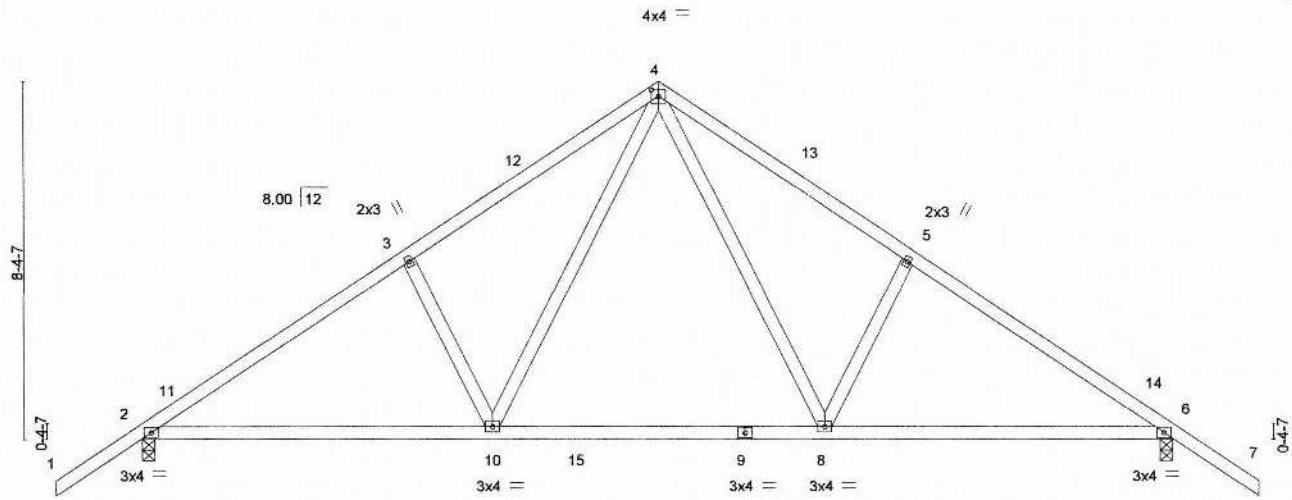

8-1-10	15-10-6	24-0-0
8-1-10	7-8-12	8-1-10

Plate Offsets (X,Y)-- [4:0-2-0,0-1-12]

LOADING (psf)		SPACING- 2-0-0		CSI.		DEFL.	in	(loc)	l/defl	L/d	PLATES	GRIP
TCLL	25.0	Plate Grip DOL	1.15	TC	0.38	Vert(LL)	-0.15	8-10	>999	240	MT20	185/148
TCDL	7.0	Lumber DOL	1.15	BC	0.49	Vert(TL)	-0.24	2-10	>999	180		
BCLL	0.0 *	Rep Stress Incr	YES	WB	0.29	Horz(TL)	0.04	6	n/a	n/a		
BCDL	10.0	Code IRC2012/TPI2007		Matrix-R							Weight: 109 lb	FT = 0%

LUMBER-
TOP CHORD 2x4 DF No.2
BOT CHORD 2x4 DF No.2
WEBS 2x4 HF Std

BRACING-
TOP CHORD Structural wood sheathing directly applied or 5-0-4 oc purlins.
BOT CHORD Rigid ceiling directly applied or 10-0-0 oc bracing.

MiTek recommends that Stabilizers and required cross bracing be installed during truss erection, in accordance with Stabilizer Installation guide.

REACTIONS. (lb/size) 2=1133/0-3-8, 6=1133/0-3-8
Max Horz 2=-265(LC 10)
Max Uplift 2=-268(LC 12), 6=-268(LC 13)

FORCES. (lb) - Max. Comp./Max. Ten. - All forces 250 (lb) or less except when shown.
TOP CHORD 2-3=-1416/270, 3-4=-1243/339, 4-5=-1243/339, 5-6=-1416/270
BOT CHORD 2-10=-249/1213, 8-10=-49/802, 6-8=-111/1081
WEBS 4-8=-179/607, 5-8=-343/283, 4-10=-179/606, 3-10=-343/283

NOTES-
1) Unbalanced roof live loads have been considered for this design.
2) Wind: ASCE 7-10; Vult=120mph (3-second gust) V(IRC2012)=95mph; TCDL=4.2psf; BCDL=6.0psf; h=25ft; Cat. II; Exp C; enclosed; MWFRS (envelope) automatic zone and C-C Exterior(2) -2-0-0 to 1-0-0, Interior(1) 1-0-0 to 12-0-0, Exterior(2) 12-0-0 to 15-0-0 zone; cantilever left and right exposed ; end vertical left and right exposed;C-C for members and forces & MWFRS for reactions shown; Lumber DOL=1.60 plate grip DOL=1.60
3) This truss has been designed for a 10.0 psf bottom chord live load nonconcurrent with any other live loads.
4) * This truss has been designed for a live load of 20.0psf on the bottom chord in all areas where a rectangle 3-6-0 tall by 2-0-0 wide will fit between the bottom chord and any other members, with BCDL = 10.0psf.
5) Provide mechanical connection (by others) of truss to bearing plate capable of withstanding 100 lb uplift at joint(s) except (jt=lb) 2=268, 6=268.

City of Portland
REVIEWED FOR CODE COMPLIANCE
APR 24 2017
Permit Number

REGISTERED PROFESSIONAL ENGINEER
89200PE
OREGON
MAY 14, 2014
DAVID MERRILL BAXTER

EXPIRES: 12/31/2017
March 9,2017

MiTek
250 Klug Circle
Corona, CA 92880

Job	Truss	Truss Type	Qty	Ply	F.I.R.E.
17-CP8204	J5S01	Jack-Open	2	1	K2936688 Job Reference (optional)

PRECISION TRUSS & LUMBER, INC., CLACKAMAS,OR. 97015

8.100 s Jan 9 2017 MiTek Industries, Inc. Thu Mar 09 11:24:01 2017 Page 1
ID:Wk6d7S9BXqoyW2Z56Q4BD0zd0Jc-B89ko0Ec0UU3SPWD1_4?sG3IuClXrgaVRxxEVwzcg7C

-2-0-0 | 1-10-3 | 1-11-4
2-0-0 | 1-10-3 | 0-1-1

Scale = 1:15.1

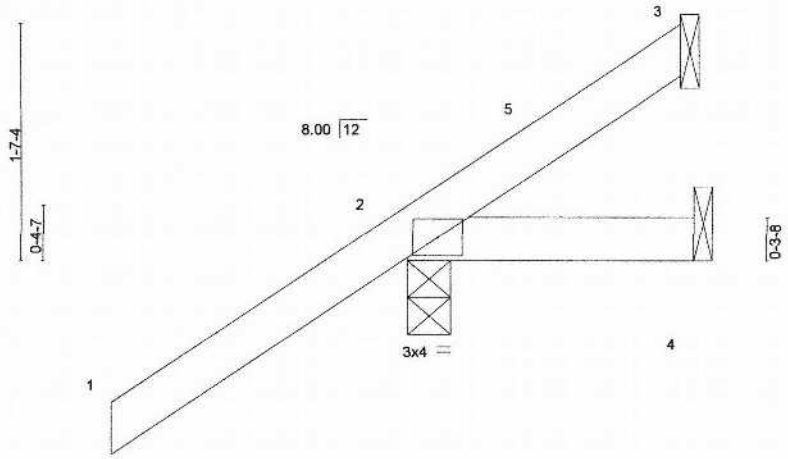

1-10-3 | 1-11-4
1-10-3 | 0-1-1

LOADING (psf)		SPACING-	2-0-0	CSI.		DEFL.	in	(loc)	l/defl	L/d	PLATES	GRIP
TCLL	25.0	Plate Grip DOL	1.15	TC	0.26	Vert(LL)	-0.00	2	>999	240	MT20	220/195
TCDL	7.0	Lumber DOL	1.15	BC	0.03	Vert(TL)	-0.00	2-4	>999	180		
BCLL	0.0 *	Rep Stress Incr	YES	WB	0.00	Horz(TL)	-0.00	3	n/a	n/a		
BCDL	10.0	Code IRC2012/TPI2007		Matrix-P							Weight: 9 lb	FT = 0%

LUMBER-
TOP CHORD 2x4 DF No.2
BOT CHORD 2x4 DF No.2

BRACING-
TOP CHORD Structural wood sheathing directly applied or 1-11-4 oc purlins.
BOT CHORD Rigid ceiling directly applied or 10-0-0 oc bracing.

MiTek recommends that Stabilizers and required cross bracing be installed during truss erection, in accordance with Stabilizer Installation guide.

REACTIONS. (lb/size) 2=280/0-3-8, 4=19/Mechanical, 3=-15/Mechanical
Max Horz 2=105(LC 12)
Max Uplift 2=-112(LC 12), 3=-15(LC 1)
Max Grav 2=280(LC 1), 4=38(LC 3), 3=21(LC 8)

FORCES. (lb) - Max. Comp./Max. Ten. - All forces 250 (lb) or less except when shown.

NOTES-
1) Wind: ASCE 7-10; Vult=120mph (3-second gust) V(IRC2012)=95mph; TCDL=4.2psf; BCDL=6.0psf; h=25ft; Cat. II; Exp C; enclosed; MWFRS (envelope) gable end zone and C-C Exterior(2) -2-0-0 to 1-0-0, Interior(1) 1-0-0 to 1-10-1 zone; cantilever left and right exposed ; end vertical left and right exposed;C-C for members and forces & MWFRS for reactions shown; Lumber DOL=1.60 plate grip DOL=1.60
2) This truss has been designed for a 10.0 psf bottom chord live load nonconcurrent with any other live loads.
3) * This truss has been designed for a live load of 20.0psf on the bottom chord in all areas where a rectangle 3-6-0 tall by 2-0-0 wide will fit between the bottom chord and any other members.
4) Refer to girder(s) for truss to truss connections.
5) Provide mechanical connection (by others) of truss to bearing plate capable of withstanding 100 lb uplift at joint(s) 3 except (jt=lb) 2=112.

City of Portland
REVIEWED FOR CODE COMPLIANCE
APR 24 2017
Permit Number

REGISTERED PROFESSIONAL ENGINEER
89200PE
OREGON
MAY 14, 2014
DAVID MERRILL BAXTER

EXPIRES: 12/31/2017
March 9,2017

MiTek
250 Klug Circle
Corona, CA 92880

Job	Truss	Truss Type	Qty	Ply	F.I.R.E.
17-CP8204	J5S02	Jack-Open	2	1	K2936689 Job Reference (optional)

PRECISION TRUSS & LUMBER, INC., CLACKAMAS,OR. 97015

8.100 s Jan 9 2017 MiTek Industries, Inc. Thu Mar 09 11:24:02 2017 Page 1
ID:Wk6d7S9BXqoyW2Z56Q4BD0zd0Jc-fLi6?MFEnocw3Z4QbhcEPTcUkc5la7pegbhn1Mzcg7B

-2-0-0 | 1-11-4 | 3-10-3
2-0-0 | 1-11-4 | 1-10-15

Scale = 1:22.1

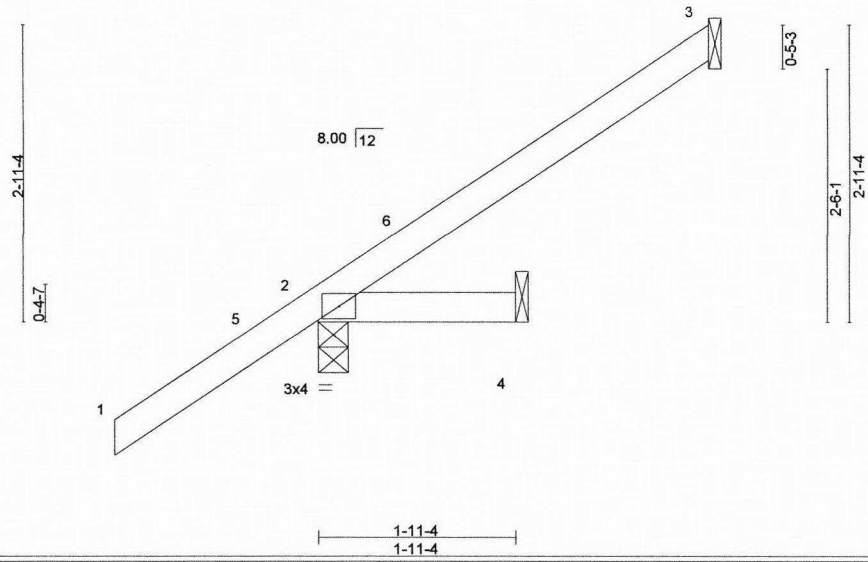

LOADING (psf)		SPACING- 2-0-0		CSI.		DEFL.	in	(loc)	l/defl	L/d	PLATES	GRIP
TCLL	25.0	Plate Grip DOL	1.15	TC	0.25	Vert(LL)	-0.00	2	>999	240	MT20	220/195
TCDL	7.0	Lumber DOL	1.15	BC	0.03	Vert(TL)	-0.00	2-4	>999	180		
BCLL	0.0 *	Rep Stress Incr	YES	WB	0.00	Horz(TL)	-0.00	3	n/a	n/a		
BCDL	10.0	Code IRC2012/TPI2007		Matrix-P							Weight: 12 lb	FT = 0%

LUMBER-
TOP CHORD 2x4 DF No.2
BOT CHORD 2x4 DF No.2

BRACING-
TOP CHORD Structural wood sheathing directly applied or 1-11-4 oc purlins.
BOT CHORD Rigid ceiling directly applied or 10-0-0 oc bracing.

MiTek recommends that Stabilizers and required cross bracing be installed during truss erection, in accordance with Stabilizer Installation guide.

REACTIONS. (lb/size) 3=85/Mechanical, 2=304/0-3-8, 4=19/Mechanical
Max Horz 2=163(LC 12)
Max Uplift 3=-82(LC 12), 2=-102(LC 12)
Max Grav 3=96(LC 19), 2=304(LC 1), 4=38(LC 3)

FORCES. (lb) - Max. Comp./Max. Ten. - All forces 250 (lb) or less except when shown.

NOTES-
1) Wind: ASCE 7-10; Vult=120mph (3-second gust) V(IRC2012)=95mph; TCDL=4.2psf; BCDL=6.0psf; h=25ft; Cat. II; Exp C; enclosed; MWFRS (envelope) gable end zone and C-C Exterior(2) -2-0-0 to 1-0-0, Interior(1) 1-0-0 to 3-9-7 zone; cantilever left and right exposed ; end vertical left and right exposed;C-C for members and forces & MWFRS for reactions shown; Lumber DOL=1.60 plate grip DOL=1.60
2) This truss has been designed for a 10.0 psf bottom chord live load nonconcurrent with any other live loads.
3) * This truss has been designed for a live load of 20.0psf on the bottom chord in all areas where a rectangle 3-6-0 tall by 2-0-0 wide will fit between the bottom chord and any other members.
4) Refer to girder(s) for truss to truss connections.
5) Provide mechanical connection (by others) of truss to bearing plate capable of withstanding 100 lb uplift at joint(s) 3 except (jt=lb) 2=102.

City of Portland
REVIEWED FOR CODE COMPLIANCE
APR 24 2017
Permit Number

REGISTERED PROFESSIONAL ENGINEER
89200PE
OREGON
MAY 14, 2014
DAVID MERRILL BAXTER

EXPIRES: 12/31/2017
March 9,2017

MiTek
250 Klug Circle
Corona, CA 92880

Job	Truss	Truss Type	Qty	Ply	F.I.R.E.
17-CP8204	J501	Jack-Open	2	1	K2936690 Job Reference (optional)

PRECISION TRUSS & LUMBER, INC., CLACKAMAS,OR. 97015 8.100 s Jan 9 2017 MiTek Industries, Inc. Thu Mar 09 11:24:00 2017 Page 1
ID:Wk6d7S9BXqoyW2Z56Q4BD0zd0Jc-jybMagD_FBMCqFx1UGZmK2W7gpNt6DKLCHCgzUzcg7D

-2-0-0 | 1-10-3 | 4-6-0
2-0-0 | 1-10-3 | 2-7-13

Scale = 1:14.9

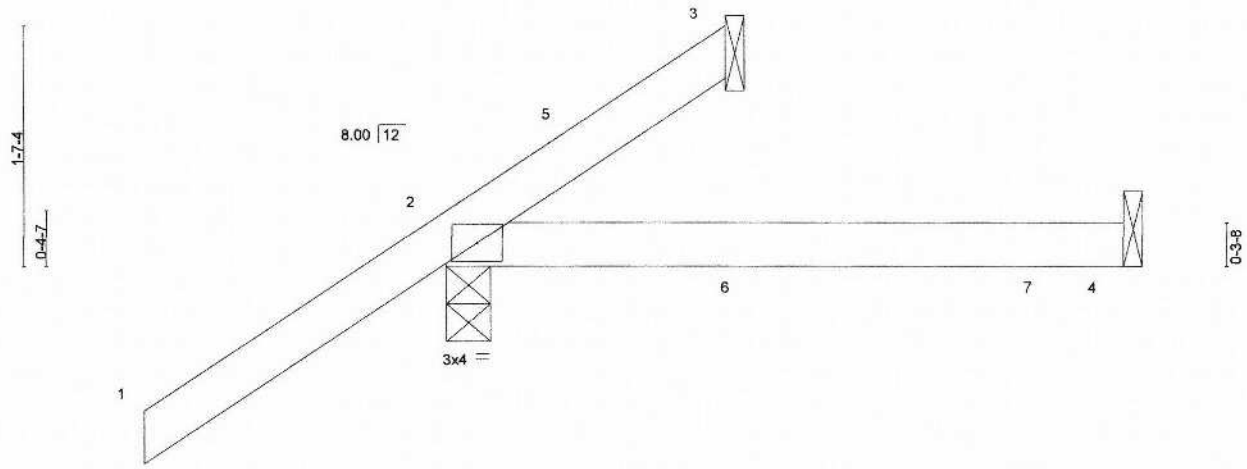

1-9-7 | 1-10-3 | 4-6-0
1-9-7 | 0-0-12 | 2-7-13

LOADING (psf)		SPACING-	2-0-0	CSI.		DEFL.	in	(loc)	l/defl	L/d	PLATES	GRIP
TCLL	25.0	Plate Grip DOL	1.15	TC	0.29	Vert(LL)	-0.02	2-4	>999	240	MT20	220/195
TCDL	7.0	Lumber DOL	1.15	BC	0.19	Vert(TL)	-0.05	2-4	>999	180		
BCLL	0.0 *	Rep Stress Incr	YES	WB	0.00	Horz(TL)	-0.00	3	n/a	n/a		
BCDL	10.0	Code IRC2012/TPI2007		Matrix-P							Weight: 13 lb	FT = 0%

LUMBER-
TOP CHORD 2x4 DF No.2
BOT CHORD 2x4 DF No.2

BRACING-
TOP CHORD Structural wood sheathing directly applied or 4-6-0 oc purlins.
BOT CHORD Rigid ceiling directly applied or 10-0-0 oc bracing.

MiTek recommends that Stabilizers and required cross bracing be installed during truss erection, in accordance with Stabilizer Installation guide.

REACTIONS. (lb/size) 3=-37/Mechanical, 2=323/0-3-8, 4=47/Mechanical
Max Horz 2=104(LC 12)
Max Uplift 3=-37(LC 1), 2=-107(LC 12)
Max Grav 3=23(LC 16), 2=323(LC 1), 4=94(LC 3)

FORCES. (lb) - Max. Comp./Max. Ten. - All forces 250 (lb) or less except when shown.

NOTES-
1) Wind: ASCE 7-10; Vult=120mph (3-second gust) V(IRC2012)=95mph; TCDL=4.2psf; BCDL=6.0psf; h=25ft; Cat. II; Exp C; enclosed; MWFRS (envelope) gable end zone and C-C Exterior(2) -2-0-0 to 1-0-0, Interior(1) 1-0-0 to 1-9-7 zone; cantilever left and right exposed ; end vertical left and right exposed;C-C for members and forces & MWFRS for reactions shown; Lumber DOL=1.60 plate grip DOL=1.60
2) This truss has been designed for a 10.0 psf bottom chord live load nonconcurrent with any other live loads.
3) * This truss has been designed for a live load of 20.0psf on the bottom chord in all areas where a rectangle 3-6-0 tall by 2-0-0 wide will fit between the bottom chord and any other members.
4) Refer to girder(s) for truss to truss connections.
5) Provide mechanical connection (by others) of truss to bearing plate capable of withstanding 100 lb uplift at joint(s) 3 except (jt=lb) 2=107.
6) Hanger(s) or other connection device(s) shall be provided sufficient to support concentrated load(s) 7 lb down at 2-0-0, and 10 lb down at 4-0-0 on bottom chord. The design/selection of such connection device(s) is the responsibility of others.
7) In the LOAD CASE(S) section, loads applied to the face of the truss are noted as front (F) or back (B).

LOAD CASE(S) Standard
1) Dead + Roof Live (balanced): Lumber Increase=1.15, Plate Increase=1.15
Uniform Loads (plf)
Vert: 1-3=-64, 2-4=-20
Concentrated Loads (lb)
Vert: 7=-5(B)

City of Portland
REVIEWED FOR CODE COMPLIANCE
APR 24 2017
Permit Number

REGISTERED PROFESSIONAL ENGINEER
89200PE
OREGON
MAY 14, 2014
DAVID MERRILL BAXTER

EXPIRES: 12/31/2017
March 9,2017

MiTek
250 Klug Circle
Corona, CA 92880

Job	Truss	Truss Type	Qty	Ply	F.I.R.E.
17-CP8204	J502	Jack-Open	2	1	K2936691 Job Reference (optional)

PRECISION TRUSS & LUMBER, INC., CLACKAMAS,OR. 97015

8.100 s Jan 9 2017 MiTek Industries, Inc. Thu Mar 09 11:24:00 2017 Page 1
ID:Wk6d7S9BXqoyW2Z56Q4BD0zd0Jc-jybMagD_FBMCqFx1UGZmK2W7upNx6DKLCHCgzUzcg7D

-2-0-0 | 3-10-3 | 4-6-0
2-0-0 | 3-10-3 | 0-7-13

Scale = 1:21.7

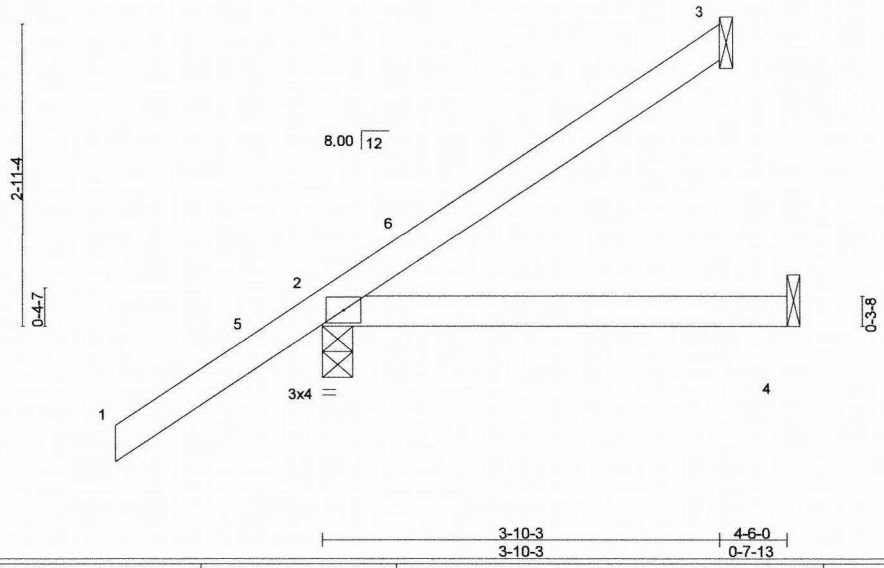

LOADING (psf)		SPACING- 2-0-0		CSI.		DEFL.	in	(loc)	l/defl	L/d	PLATES	GRIP
TCLL	25.0	Plate Grip DOL	1.15	TC	0.28	Vert(LL)	-0.02	2-4	>999	240	MT20	220/195
TCDL	7.0	Lumber DOL	1.15	BC	0.18	Vert(TL)	-0.04	2-4	>999	180		
BCLL	0.0 *	Rep Stress Incr	YES	WB	0.00	Horz(TL)	-0.00	3	n/a	n/a		
BCDL	10.0	Code IRC2012/TPI2007		Matrix-P							Weight: 16 lb	FT = 0%

LUMBER-
TOP CHORD 2x4 DF No.2
BOT CHORD 2x4 DF No.2

BRACING-
TOP CHORD Structural wood sheathing directly applied or 4-6-0 oc purlins.
BOT CHORD Rigid ceiling directly applied or 10-0-0 oc bracing.

MiTek recommends that Stabilizers and required cross bracing be installed during truss erection, in accordance with Stabilizer Installation guide.

REACTIONS. (lb/size) 3=76/Mechanical, 2=337/0-3-8, 4=43/Mechanical
Max Horz 2=163(LC 12)
Max Uplift 3=-79(LC 12), 2=-90(LC 12)
Max Grav 3=88(LC 19), 2=337(LC 1), 4=86(LC 3)

FORCES. (lb) - Max. Comp./Max. Ten. - All forces 250 (lb) or less except when shown.

NOTES-
1) Wind: ASCE 7-10; Vult=120mph (3-second gust) V(IRC2012)=95mph; TCDL=4.2psf; BCDL=6.0psf; h=25ft; Cat. II; Exp C; enclosed; MWFRS (envelope) gable end zone and C-C Exterior(2) -2-0-0 to 1-0-0, Interior(1) 1-0-0 to 3-9-7 zone; cantilever left and right exposed ; end vertical left and right exposed;C-C for members and forces & MWFRS for reactions shown; Lumber DOL=1.60 plate grip DOL=1.60
2) This truss has been designed for a 10.0 psf bottom chord live load nonconcurrent with any other live loads.
3) * This truss has been designed for a live load of 20.0psf on the bottom chord in all areas where a rectangle 3-6-0 tall by 2-0-0 wide will fit between the bottom chord and any other members.
4) Refer to girder(s) for truss to truss connections.
5) Provide mechanical connection (by others) of truss to bearing plate capable of withstanding 100 lb uplift at joint(s) 3, 2.

City of Portland
REVIEWED FOR CODE COMPLIANCE
APR 24 2017
Permit Number

REGISTERED PROFESSIONAL ENGINEER
89200PE
OREGON
MAY 14, 2014
DAVID MERRILL BAXTER

EXPIRES: 12/31/2017
March 9,2017

MiTek
250 Klug Circle
Corona, CA 92880

Job	Truss	Truss Type	Qty	Ply	F.I.R.E.
17-CP8204	J503	JACK-OPEN	4	1	K2936692 Job Reference (optional)

PRECISION TRUSS & LUMBER, INC., CLACKAMAS,OR. 97015

8.100 s Jan 9 2017 MiTek Industries, Inc. Thu Mar 09 11:24:01 2017 Page 1
ID:Wk6d7S9BXqoyW2Z56Q4BD0zd0Jc-B89ko0Ec0UU3SPWD1_4?sG3I0CjArgaVRxxEVwzcg7C

-2-0-0 | 4-6-0
2-0-0 | 4-6-0

Scale: 1/2"=1'

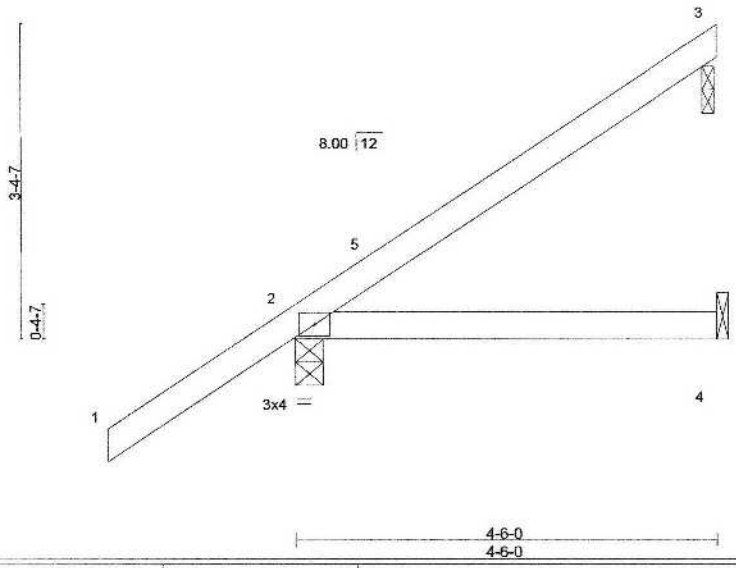

LOADING (psf)		SPACING-	2-0-0	CSI.		DEFL.	in	(loc)	l/defl	L/d	PLATES	GRIP
TCLL	25.0	Plate Grip DOL	1.15	TC	0.31	Vert(LL)	-0.02	2-4	>999	240	MT20	220/195
TCDL	7.0	Lumber DOL	1.15	BC	0.18	Vert(TL)	-0.04	2-4	>999	180		
BCLL	0.0 *	Rep Stress Incr	YES	WB	0.00	Horz(TL)	-0.00	3	n/a	n/a		
BCDL	10.0	Code IRC2012/TPI2007		Matrix-P							Weight: 17 lb	FT = 0%

LUMBER-
TOP CHORD 2x4 DF No.2
BOT CHORD 2x4 DF No.2

BRACING-
TOP CHORD Structural wood sheathing directly applied or 4-6-0 oc purlins.
BOT CHORD Rigid ceiling directly applied or 10-0-0 oc bracing.

MiTek recommends that Stabilizers and required cross bracing be installed during truss erection, in accordance with Stabilizer Installation guide.

REACTIONS. (lb/size) 3=103/0-1-8, 2=352/0-3-8, 4=43/Mechanical
Max Horz 2=182(LC 12)
Max Uplift 3=-101(LC 12), 2=-91(LC 12)
Max Grav 3=116(LC 19), 2=352(LC 1), 4=86(LC 3)

FORCES. (lb) - Max. Comp./Max. Ten. - All forces 250 (lb) or less except when shown.

NOTES-
1) Wind: ASCE 7-10; Vult=120mph (3-second gust) V(IRC2012)=95mph; TCDL=4.2psf; BCDL=6.0psf; h=25ft; Cat. II; Exp C; enclosed; MWFRS (envelope) gable end zone and C-C Exterior(2) -2-0-0 to 1-0-0, Interior(1) 1-0-0 to 4-5-4 zone; cantilever left and right exposed ; end vertical left and right exposed;C-C for members and forces & MWFRS for reactions shown; Lumber DOL=1.60 plate grip DOL=1.60
2) This truss has been designed for a 10.0 psf bottom chord live load nonconcurrent with any other live loads.
3) * This truss has been designed for a live load of 20.0psf on the bottom chord in all areas where a rectangle 3-6-0 tall by 2-0-0 wide will fit between the bottom chord and any other members.
4) Refer to girder(s) for truss to truss connections.
5) Provide mechanical connection (by others) of truss to bearing plate at joint(s) 3.
6) Provide mechanical connection (by others) of truss to bearing plate capable of withstanding 100 lb uplift at joint(s) 2 except (jt=lb) 3=101.
7) Beveled plate or shim required to provide full bearing surface with truss chord at joint(s) 3.

City of Portland
REVIEWED FOR CODE COMPLIANCE
APR 24 2017
Permit Number

REGISTERED PROFESSIONAL ENGINEER
89200PE
OREGON
MAY 14, 2014
DAVID MERRILL BAXTER

EXPIRES: 12/31/2017
March 9,2017

MiTek
250 Klug Circle
Corona, CA 92880

Job	Truss	Truss Type	Qty	Ply	F.I.R.E.
17-CP8204	JA01	Jack-Open	4	1	K2936693 Job Reference (optional)

PRECISION TRUSS & LUMBER, INC., CLACKAMAS,OR. 97015

8.100 s Jan 9 2017 MiTek Industries, Inc. Thu Mar 09 11:24:02 2017 Page 1
ID:Wk6d7S9BXqoyW2Z56Q4BD0zd0Jc-fLi6?MFEnocw3Z4QbhcEPTcT9c0wa7pegbhn1Mzcg7B

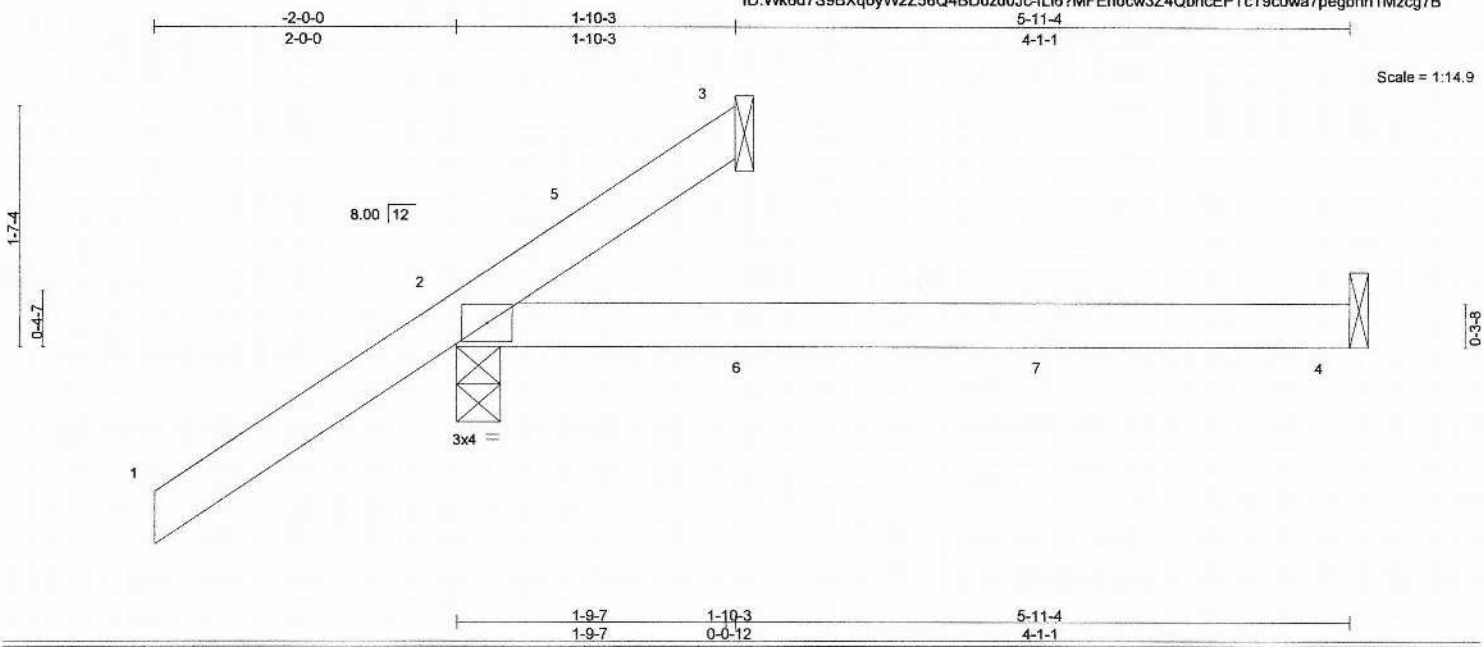

LOADING (psf)		SPACING- 2-0-0		CSI.		DEFL.	in	(loc)	l/defl	L/d	PLATES	GRIP
TCLL	25.0	Plate Grip DOL	1.15	TC	0.29	Vert(LL)	-0.06	2-4	>999	240	MT20	220/195
TCDL	7.0	Lumber DOL	1.15	BC	0.34	Vert(TL)	-0.14	2-4	>486	180		
BCLL	0.0 *	Rep Stress Incr	YES	WB	0.00	Horz(TL)	-0.00	3	n/a	n/a		
BCDL	10.0	Code IRC2012/TPI2007		Matrix-P							Weight: 15 lb	FT = 0%

LUMBER-
TOP CHORD 2x4 DF No.2
BOT CHORD 2x4 DF No.2

BRACING-
TOP CHORD Structural wood sheathing directly applied or 5-11-4 oc purlins.
BOT CHORD Rigid ceiling directly applied or 10-0-0 oc bracing.

MiTek recommends that Stabilizers and required cross bracing be installed during truss erection, in accordance with Stabilizer Installation guide.

REACTIONS. (lb/size) 3=-37/Mechanical, 2=337/0-3-8, 4=57/Mechanical
Max Horz 2=104(LC 12)
Max Uplift 3=-37(LC 1), 2=-99(LC 12)
Max Grav 3=23(LC 16), 2=337(LC 1), 4=115(LC 3)

FORCES. (lb) - Max. Comp./Max. Ten. - All forces 250 (lb) or less except when shown.

NOTES-
1) Wind: ASCE 7-10; Vult=120mph (3-second gust) V(IRC2012)=95mph; TCDL=4.2psf; BCDL=6.0psf; h=25ft; Cat. II; Exp C; enclosed; MWFRS (envelope) gable end zone and C-C Exterior(2) -2-0-0 to 1-0-0, Interior(1) 1-0-0 to 1-9-7 zone; cantilever left and right exposed ; end vertical left and right exposed;C-C for members and forces & MWFRS for reactions shown; Lumber DOL=1.60 plate grip DOL=1.60
2) This truss has been designed for a 10.0 psf bottom chord live load nonconcurrent with any other live loads.
3) * This truss has been designed for a live load of 20.0psf on the bottom chord in all areas where a rectangle 3-6-0 tall by 2-0-0 wide will fit between the bottom chord and any other members.
4) Refer to girder(s) for truss to truss connections.
5) Provide mechanical connection (by others) of truss to bearing plate capable of withstanding 100 lb uplift at joint(s) 3, 2.
6) Hanger(s) or other connection device(s) shall be provided sufficient to support concentrated load(s) 7 lb down at 2-0-0, and 7 lb down at 4-0-0 on bottom chord. The design/selection of such connection device(s) is the responsibility of others.
7) In the LOAD CASE(S) section, loads applied to the face of the truss are noted as front (F) or back (B).

LOAD CASE(S) Standard
1) Dead + Roof Live (balanced): Lumber Increase=1.15, Plate Increase=1.15
Uniform Loads (plf)
Vert: 1-3=-64, 2-4=-20

City of Portland
REVIEWED FOR CODE COMPLIANCE
APR 24 2017
Permit Number

REGISTERED PROFESSIONAL ENGINEER
89200PE
OREGON
MAY 14, 2014
DAVID MERRILL BAXTER

EXPIRES: 12/31/2017
March 9,2017

MiTek
250 Klug Circle
Corona, CA 92880

Job	Truss	Truss Type	Qty	Ply	F.I.R.E.
17-CP8204	JA02	Jack-Open	4	1	K2936694 Job Reference (optional)

PRECISION TRUSS & LUMBER, INC., CLACKAMAS,OR. 97015

8.100 s Jan 9 2017 MiTek Industries, Inc. Thu Mar 09 11:24:03 2017 Page 1
ID:Wk6d7S9BXqoyW2Z56Q4BD0zd0Jc-7XGUDhFsX6lnhjfc9P7Tyh8e90M9Ja3ovFQLZozcg7A

-2-0-0 | 3-10-3 | 5-11-4
2-0-0 | 3-10-3 | 2-1-1

Scale = 1:21.5

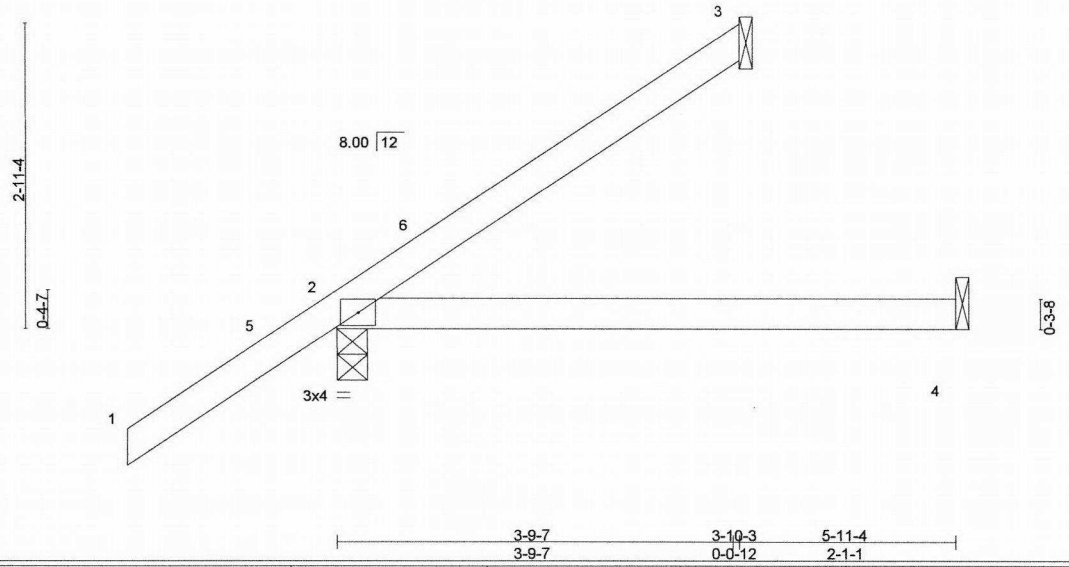

LOADING (psf)		SPACING-	2-0-0	CSI.		DEFL.	in	(loc)	l/defl	L/d	PLATES	GRIP
TCLL	25.0	Plate Grip DOL	1.15	TC	0.27	Vert(LL)	-0.06	2-4	>999	240	MT20	220/195
TCDL	7.0	Lumber DOL	1.15	BC	0.34	Vert(TL)	-0.14	2-4	>486	180		
BCLL	0.0 *	Rep Stress Incr	YES	WB	0.00	Horz(TL)	-0.00	3	n/a	n/a		
BCDL	10.0	Code IRC2012/TPI2007		Matrix-P							Weight: 18 lb	FT = 0%

LUMBER-
TOP CHORD 2x4 DF No.2
BOT CHORD 2x4 DF No.2

BRACING-
TOP CHORD Structural wood sheathing directly applied or 5-11-4 oc purlins.
BOT CHORD Rigid ceiling directly applied or 10-0-0 oc bracing.

MiTek recommends that Stabilizers and required cross bracing be installed during truss erection, in accordance with Stabilizer Installation guide.

REACTIONS. (lb/size) 3=76/Mechanical, 2=352/0-3-8, 4=57/Mechanical
Max Horz 2=163(LC 12)
Max Uplift 3=-79(LC 12), 2=-82(LC 12)
Max Grav 3=88(LC 19), 2=352(LC 1), 4=115(LC 3)

FORCES. (lb) - Max. Comp./Max. Ten. - All forces 250 (lb) or less except when shown.

NOTES-
1) Wind: ASCE 7-10; Vult=120mph (3-second gust) V(IRC2012)=95mph; TCDL=4.2psf; BCDL=6.0psf; h=25ft; Cat. II; Exp C; enclosed; MWFRS (envelope) gable end zone and C-C Exterior(2) -2-0-0 to 1-0-0, Interior(1) 1-0-0 to 3-9-7 zone; cantilever left and right exposed ; end vertical left and right exposed;C-C for members and forces & MWFRS for reactions shown; Lumber DOL=1.60 plate grip DOL=1.60
2) This truss has been designed for a 10.0 psf bottom chord live load nonconcurrent with any other live loads.
3) * This truss has been designed for a live load of 20.0psf on the bottom chord in all areas where a rectangle 3-6-0 tall by 2-0-0 wide will fit between the bottom chord and any other members.
4) Refer to girder(s) for truss to truss connections.
5) Provide mechanical connection (by others) of truss to bearing plate capable of withstanding 100 lb uplift at joint(s) 3, 2.

City of Portland
REVIEWED FOR CODE COMPLIANCE
APR 24 2017
Permit Number

REGISTERED PROFESSIONAL ENGINEER
89200PE
OREGON
MAY 14, 2014
DAVID MERRILL BAXTER

EXPIRES: 12/31/2017
March 9,2017

MiTek
250 Klug Circle
Corona, CA 92880

Job	Truss	Truss Type	Qty	Ply	F.I.R.E.
17-CP8204	JA03	Jack-Open	4	1	K2936695 Job Reference (optional)

PRECISION TRUSS & LUMBER, INC., CLACKAMAS,OR. 97015 8.100 s Jan 9 2017 MiTek Industries, Inc. Thu Mar 09 11:24:03 2017 Page 1
ID:Wk6d7S9BXqoyW2Z56Q4BD0zd0Jc-7XGUDhFsX6lnhjfc9P7Tyh8aO0M9Ja3ovFQLZozcg7A

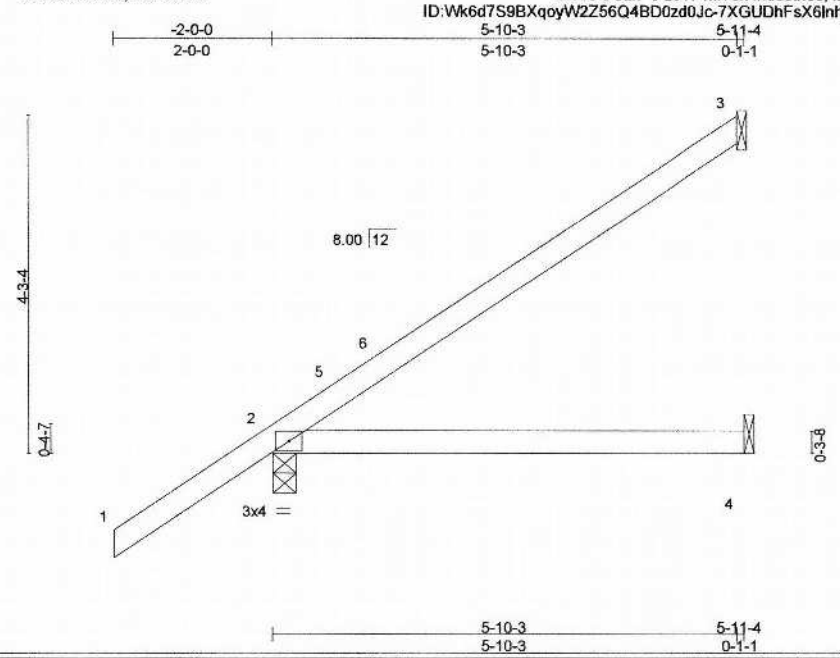

LOADING (psf)		SPACING-	2-0-0	CSI.		DEFL.	in	(loc)	l/defl	L/d	PLATES	GRIP
TCLL	25.0	Plate Grip DOL	1.15	TC	0.51	Vert(LL)	-0.06	2-4	>999	240	MT20	220/195
TCDL	7.0	Lumber DOL	1.15	BC	0.34	Vert(TL)	-0.14	2-4	>486	180		
BCLL	0.0 *	Rep Stress Incr	YES	WB	0.00	Horz(TL)	-0.00	3	n/a	n/a		
BCDL	10.0	Code IRC2012/TPI2007		Matrix-P							Weight: 21 lb	FT = 0%

LUMBER-
TOP CHORD 2x4 DF No.2
BOT CHORD 2x4 DF No.2

BRACING-
TOP CHORD Structural wood sheathing directly applied or 5-11-4 oc purlins.
BOT CHORD Rigid ceiling directly applied or 10-0-0 oc bracing.

MiTek recommends that Stabilizers and required cross bracing be installed during truss erection, in accordance with Stabilizer Installation guide.

REACTIONS. (lb/size) 3=154/Mechanical, 2=401/0-3-8, 4=57/Mechanical
Max Horz 2=222(LC 12)
Max Uplift 3=-144(LC 12), 2=-88(LC 12)
Max Grav 3=170(LC 19), 2=401(LC 1), 4=115(LC 3)

FORCES. (lb) - Max. Comp./Max. Ten. - All forces 250 (lb) or less except when shown.

NOTES-
1) Wind: ASCE 7-10; Vult=120mph (3-second gust) V(IRC2012)=95mph; TCDL=4.2psf; BCDL=6.0psf; h=25ft; Cat. II; Exp C; enclosed; MWFRS (envelope) gable end zone and C-C Exterior(2) -2-0-0 to 1-0-0, Interior(1) 1-0-0 to 5-9-7 zone; cantilever left and right exposed ; end vertical left and right exposed;C-C for members and forces & MWFRS for reactions shown; Lumber DOL=1.60 plate grip DOL=1.60
2) This truss has been designed for a 10.0 psf bottom chord live load nonconcurrent with any other live loads.
3) * This truss has been designed for a live load of 20.0psf on the bottom chord in all areas where a rectangle 3-6-0 tall by 2-0-0 wide will fit between the bottom chord and any other members.
4) Refer to girder(s) for truss to truss connections.
5) Provide mechanical connection (by others) of truss to bearing plate capable of withstanding 100 lb uplift at joint(s) 2 except (jt=lb) 3=144.

City of Portland
REVIEWED FOR CODE COMPLIANCE
APR 24 2017
Permit Number

REGISTERED PROFESSIONAL ENGINEER
89200PE
OREGON
MAY 14, 2014
DAVID MERRILL BAXTER

EXPIRES: 12/31/2017
March 9,2017

MiTek
250 Klug Circle
Corona, CA 92880

Job	Truss	Truss Type	Qty	Ply	F.I.R.E.
17-CP8204	JA04	Jack-Open	4	1	K2936696
					Job Reference (optional)

PRECISION TRUSS & LUMBER, INC., CLACKAMAS,OR. 97015

8.100 s Jan 9 2017 MiTek Industries, Inc. Thu Mar 09 11:24:04 2017 Page 1
ID:Wk6d7S9BXqoyW2Z56Q4BD0zd0Jc-cjqtQ1GUIPtdJsEoj6eiUuho_QhT20Sx7vAu6Fzcg79

-2-0-0	3-0-5	5-11-4	7-10-3
2-0-0	3-0-5	2-10-15	1-10-15

Scale = 1:35.0

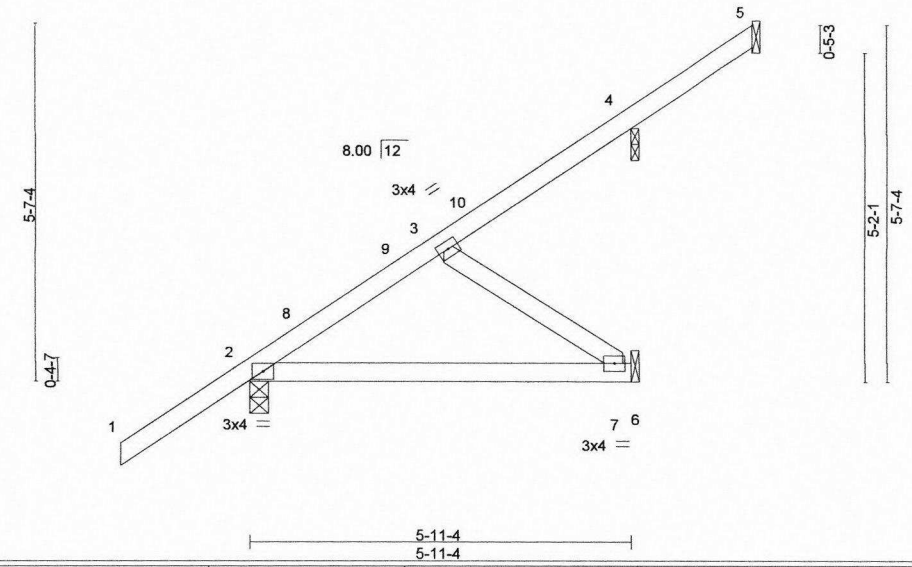

LOADING (psf)		SPACING- 2-0-0		CSI.		DEFL.	in	(loc)	l/defl	L/d	PLATES	GRIP
TCLL	25.0	Plate Grip DOL	1.15	TC	0.33	Vert(LL)	-0.05	2-7	>999	240	MT20	185/148
TCDL	7.0	Lumber DOL	1.15	BC	0.40	Vert(TL)	-0.14	2-7	>503	180		
BCLL	0.0 *	Rep Stress Incr	NO	WB	0.12	Horz(TL)	0.00	7	n/a	n/a		
BCDL	10.0	Code IRC2012/TPI2007		Matrix-P							Weight: 28 lb	FT = 0%

LUMBER-
TOP CHORD 2x4 DF No.2
BOT CHORD 2x4 DF No.2
WEBS 2x4 HF Std

BRACING-
TOP CHORD Structural wood sheathing directly applied or 5-11-4 oc purlins.
BOT CHORD Rigid ceiling directly applied or 10-0-0 oc bracing.

MiTek recommends that Stabilizers and required cross bracing be installed during truss erection, in accordance with Stabilizer Installation guide.

REACTIONS. All bearings Mechanical except (jt=length) 2=0-3-8, 4=0-1-8.
(lb) - Max Horz 2=266(LC 12)
Max Grav All reactions 250 lb or less at joint(s) 5 except 2=559(LC 1), 7=266(LC 19), 4=291(LC 19)

FORCES. (lb) - Max. Comp./Max. Ten. - All forces 250 (lb) or less except when shown.
TOP CHORD 2-3=-439/0
BOT CHORD 2-7=0/377
WEBS 3-7=-460/0

City of Portland
REVIEWED FOR CODE COMPLIANCE
APR 24 2017
Permit Number

NOTES-
1) Wind: ASCE 7-10; Vult=120mph (3-second gust) V(IRC2012)=95mph; TCDL=4.2psf; BCDL=6.0psf; h=25ft; Cat. II; Exp C; enclosed; MWFRS (envelope) gable end zone; cantilever left and right exposed ; end vertical left and right exposed; Lumber DOL=1.60 plate grip DOL=1.60
2) C-C wind load user defined.
3) This truss has been designed for a 10.0 psf bottom chord live load nonconcurrent with any other live loads.
4) * This truss has been designed for a live load of 20.0psf on the bottom chord in all areas where a rectangle 3-6-0 tall by 2-0-0 wide will fit between the bottom chord and any other members.
5) Refer to girder(s) for truss to truss connections.
6) Provide mechanical connection (by others) of truss to bearing plate at joint(s) 4.
7) Beveled plate or shim required to provide full bearing surface with truss chord at joint(s) 4.
8) Load case(s) 1, 2, 3, 4, 5, 6, 7, 8, 9, 10, 11, 12, 13, 14, 15, 16, 17, 18, 19, 20, 21, 22 has/have been modified. Building designer must review loads to verify that they are correct for the intended use of this truss.
9) In the LOAD CASE(S) section, loads applied to the face of the truss are noted as front (F) or back (B).

REGISTERED PROFESSIONAL ENGINEER
89200PE
OREGON
MAY 14, 2014
DAVID MERRILL BAXTER

LOAD CASE(S)
1) Dead + Roof Live (balanced): Lumber Increase=1.15, Plate Increase=1.15
Uniform Loads (plf)
Vert: 1-2=-64, 2-9=-104(F=-40), 4-9=-144(F=-80), 4-5=-104(F=-40), 2-6=-20
2) Dead + 0.75 Roof Live (balanced): Lumber Increase=1.15, Plate Increase=1.15
Uniform Loads (plf)
Vert: 1-2=-52, 2-9=-91(F=-40), 4-9=-131(F=-80), 4-5=-92(F=-40), 2-6=-20
3) Dead + Uninhabitable Attic Without Storage: Lumber Increase=1.25, Plate Increase=1.25
Uniform Loads (plf)
Vert: 1-2=-14, 2-9=-54(F=-40), 4-9=-94(F=-80), 4-5=-54(F=-40), 2-6=-40

EXPIRES: 12/31/2017
March 9,2017

Continued on page 2

MiTek
250 Klug Circle
Corona, CA 92880

LOAD CASE(S)

4) Dead + 0.6 C-C Wind (Pos. Internal) Case 1: Lumber Increase=1.60, Plate Increase=1.60
Uniform Loads (plf)
Vert: 1-2=62, 2-8=0(F=-40), 8-9=-7(F=-40), 4-9=-47(F=-80), 4-5=-7(F=-40), 2-6=-12
Horz: 1-2=-71, 2-8=-49, 5-8=-41

5) Dead + 0.6 C-C Wind (Pos. Internal) Case 2: Lumber Increase=1.60, Plate Increase=1.60
Uniform Loads (plf)
Vert: 1-2=27, 2-9=-7(F=-40), 9-10=-47(F=-80), 4-10=-40(F=-80), 4-5=0(F=-40), 2-6=-12
Horz: 1-2=-35, 2-10=-41, 5-10=-49

6) Dead + 0.6 C-C Wind (Neg. Internal) Case 1: Lumber Increase=1.60, Plate Increase=1.60
Uniform Loads (plf)
Vert: 1-2=18, 2-9=-92(F=-40), 4-9=-132(F=-80), 4-5=-92(F=-40), 2-6=-20
Horz: 1-2=-32, 2-5=38

7) Dead + 0.6 C-C Wind (Neg. Internal) Case 2: Lumber Increase=1.60, Plate Increase=1.60
Uniform Loads (plf)
Vert: 1-2=-46, 2-9=-92(F=-40), 4-9=-132(F=-80), 4-5=-92(F=-40), 2-6=-20
Horz: 1-2=32, 2-5=38

8) Dead + 0.6 MWFRS Wind (Pos. Internal) Left: Lumber Increase=1.60, Plate Increase=1.60
Uniform Loads (plf)
Vert: 1-2=3, 2-9=-52(F=-40), 4-9=-92(F=-80), 4-5=-52(F=-40), 2-6=-12
Horz: 1-2=-12, 2-5=3

9) Dead + 0.6 MWFRS Wind (Pos. Internal) Right: Lumber Increase=1.60, Plate Increase=1.60
Uniform Loads (plf)
Vert: 1-2=10, 2-9=-23(F=-40), 4-9=-63(F=-80), 4-5=-23(F=-40), 2-6=-12
Horz: 1-2=-19, 2-5=-25

10) Dead + 0.6 MWFRS Wind (Neg. Internal) Left: Lumber Increase=1.60, Plate Increase=1.60
Uniform Loads (plf)
Vert: 1-2=-24, 2-9=-70(F=-40), 4-9=-110(F=-80), 4-5=-70(F=-40), 2-6=-20
Horz: 1-2=10, 2-5=16

11) Dead + 0.6 MWFRS Wind (Neg. Internal) Right: Lumber Increase=1.60, Plate Increase=1.60
Uniform Loads (plf)
Vert: 1-2=5, 2-9=-42(F=-40), 4-9=-82(F=-80), 4-5=-42(F=-40), 2-6=-20
Horz: 1-2=-19, 2-5=-12

12) Dead + 0.6 MWFRS Wind (Pos. Internal) 1st Parallel: Lumber Increase=1.60, Plate Increase=1.60
Uniform Loads (plf)
Vert: 1-2=30, 2-9=-4(F=-40), 4-9=-44(F=-80), 4-5=-17(F=-40), 2-6=-12
Horz: 1-2=-38, 2-4=-44, 4-5=-31

13) Dead + 0.6 MWFRS Wind (Pos. Internal) 2nd Parallel: Lumber Increase=1.60, Plate Increase=1.60
Uniform Loads (plf)
Vert: 1-2=5, 2-9=-29(F=-40), 4-9=-69(F=-80), 4-5=-29(F=-40), 2-6=-12
Horz: 1-2=-13, 2-5=-20

14) Dead + 0.6 MWFRS Wind (Pos. Internal) 3rd Parallel: Lumber Increase=1.60, Plate Increase=1.60
Uniform Loads (plf)
Vert: 1-2=16, 2-9=-17(F=-40), 4-9=-57(F=-80), 4-5=-17(F=-40), 2-6=-12
Horz: 1-2=-25, 2-5=-31

15) Dead + 0.6 MWFRS Wind (Pos. Internal) 4th Parallel: Lumber Increase=1.60, Plate Increase=1.60
Uniform Loads (plf)
Vert: 1-2=5, 2-9=-29(F=-40), 4-9=-69(F=-80), 4-5=-29(F=-40), 2-6=-12
Horz: 1-2=-13, 2-5=-20

16) Dead + 0.6 MWFRS Wind (Neg. Internal) 1st Parallel: Lumber Increase=1.60, Plate Increase=1.60
Uniform Loads (plf)
Vert: 1-2=24, 2-9=-22(F=-40), 4-9=-62(F=-80), 4-5=-36(F=-40), 2-6=-20
Horz: 1-2=-38, 2-4=-32, 4-5=-18

17) Dead + 0.6 MWFRS Wind (Neg. Internal) 2nd Parallel: Lumber Increase=1.60, Plate Increase=1.60
Uniform Loads (plf)
Vert: 1-2=-1, 2-9=-47(F=-40), 4-9=-87(F=-80), 4-5=-47(F=-40), 2-6=-20
Horz: 1-2=-13, 2-5=-7

18) Dead: Lumber Increase=0.90, Plate Increase=0.90 Plt. metal=0.90
Uniform Loads (plf)
Vert: 1-2=-14, 2-9=-54(F=-40), 4-9=-94(F=-80), 4-5=-54(F=-40), 2-6=-20

19) Dead + 0.75 Roof Live (bal.) + 0.75(0.6 MWFRS Wind (Neg. Int) Left): Lumber Increase=1.60, Plate Increase=1.60
Uniform Loads (plf)
Vert: 1-2=-59, 2-9=-103(F=-40), 4-9=-143(F=-80), 4-5=-103(F=-40), 2-6=-20
Horz: 1-2=7, 2-5=12

20) Dead + 0.75 Roof Live (bal.) + 0.75(0.6 MWFRS Wind (Neg. Int) Right): Lumber Increase=1.60, Plate Increase=1.60
Uniform Loads (plf)
Vert: 1-2=-37, 2-9=-82(F=-40), 4-9=-122(F=-80), 4-5=-82(F=-40), 2-6=-20
Horz: 1-2=-14, 2-5=-9

21) Dead + 0.75 Roof Live (bal.) + 0.75(0.6 MWFRS Wind (Neg. Int) 1st Parallel): Lumber Increase=1.60, Plate Increase=1.60
Uniform Loads (plf)
Vert: 1-2=-23, 2-9=-68(F=-40), 4-9=-108(F=-80), 4-5=-78(F=-40), 2-6=-20
Horz: 1-2=-29, 2-4=-24, 4-5=-14

22) Dead + 0.75 Roof Live (bal.) + 0.75(0.6 MWFRS Wind (Neg. Int) 2nd Parallel): Lumber Increase=1.60, Plate Increase=1.60
Uniform Loads (plf)
Vert: 1-2=-42, 2-9=-86(F=-40), 4-9=-126(F=-80), 4-5=-86(F=-40), 2-6=-20
Horz: 1-2=-10, 2-5=-5

City of Portland
REVIEWED FOR CODE COMPLIANCE
APR 24 2017
Permit Number

Job	Truss	Truss Type	Qty	Ply	F.I.R.E.
17-CP8204	JA05	Jack-Open	4	1	K2936697 Job Reference (optional)

PRECISION TRUSS & LUMBER, INC., CLACKAMAS,OR. 97015

8.100 s Jan 9 2017 MiTek Industries, Inc. Thu Mar 09 11:24:04 2017 Page 1
ID:Wk6d7S9BXqoyW2Z56Q4BD0zd0Jc-cjqtQ1GUIPtdJsEoj6eiUuhnDQhf20nx7vAu6Fzcg79

-2-0-0	3-0-5	5-11-4	9-10-3
2-0-0	3-0-5	2-10-15	3-10-15

Scale = 1:41.7

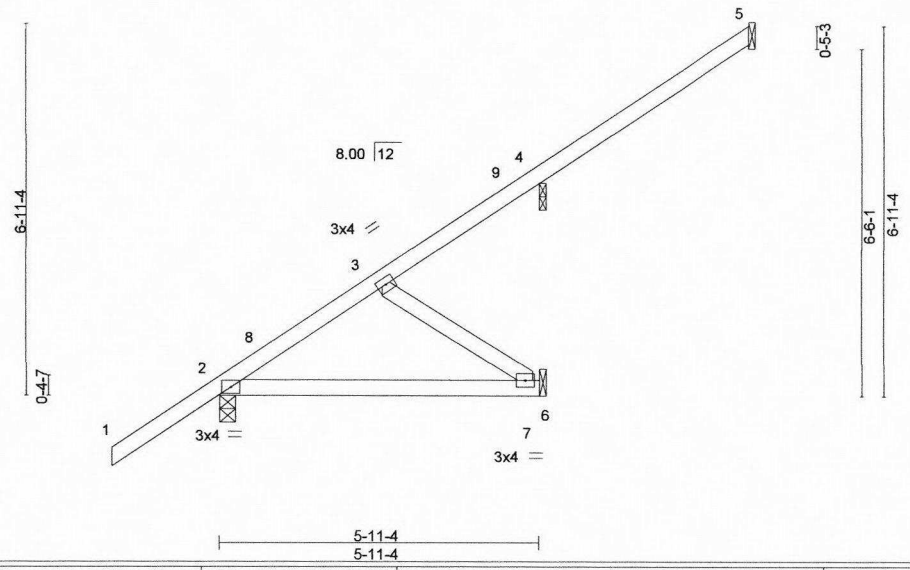

LOADING (psf)		SPACING-	2-0-0	CSI.		DEFL.	in	(loc)	l/defl	L/d	PLATES	GRIP
TCLL	25.0	Plate Grip DOL	1.15	TC	0.45	Vert(LL)	-0.05	2-7	>999	240	MT20	185/148
TCDL	7.0	Lumber DOL	1.15	BC	0.39	Vert(TL)	-0.14	2-7	>503	180		
BCLL	0.0 *	Rep Stress Incr	NO	WB	0.10	Horz(TL)	-0.00	5	n/a	n/a		
BCDL	10.0	Code IRC2012/TPI2007		Matrix-P							Weight: 31 lb	FT = 0%

LUMBER-
TOP CHORD 2x4 DF No.2
BOT CHORD 2x4 DF No.2
WEBS 2x4 HF Std

BRACING-
TOP CHORD Structural wood sheathing directly applied or 5-11-4 oc purlins.
BOT CHORD Rigid ceiling directly applied or 10-0-0 oc bracing.

MiTek recommends that Stabilizers and required cross bracing be installed during truss erection, in accordance with Stabilizer Installation guide.

REACTIONS. All bearings Mechanical except (jt=length) 2=0-3-8, 4=0-1-8.
(lb) - Max Horz 2=307(LC 12)
Max Uplift All uplift 100 lb or less at joint(s) 4
Max Grav All reactions 250 lb or less at joint(s) 5, 7 except 2=519(LC 1), 4=347(LC 19)

FORCES. (lb) - Max. Comp./Max. Ten. - All forces 250 (lb) or less except when shown.
TOP CHORD 2-3=-362/0
BOT CHORD 2-7=-15/313
WEBS 3-7=-382/18

NOTES-
1) Wind: ASCE 7-10; Vult=120mph (3-second gust) V(IRC2012)=95mph; TCDL=4.2psf; BCDL=6.0psf; h=25ft; Cat. II; Exp C; enclosed; MWFRS (envelope) gable end zone; cantilever left and right exposed ; end vertical left and right exposed; Lumber DOL=1.60 plate grip DOL=1.60
2) C-C wind load user defined.
3) This truss has been designed for a 10.0 psf bottom chord live load nonconcurrent with any other live loads.
4) * This truss has been designed for a live load of 20.0psf on the bottom chord in all areas where a rectangle 3-6-0 tall by 2-0-0 wide will fit between the bottom chord and any other members.
5) Refer to girder(s) for truss to truss connections.
6) Provide mechanical connection (by others) of truss to bearing plate at joint(s) 4.
7) Provide mechanical connection (by others) of truss to bearing plate capable of withstanding 100 lb uplift at joint(s) 4.
8) Beveled plate or shim required to provide full bearing surface with truss chord at joint(s) 4.
9) Load case(s) 1, 2, 3, 4, 5, 6, 7, 8, 9, 10, 11, 12, 13, 14, 15, 16, 17, 18, 19, 20, 21, 22 has/have been modified. Building designer must review loads to verify that they are correct for the intended use of this truss.
10) In the LOAD CASE(S) section, loads applied to the face of the truss are noted as front (F) or back (B).

LOAD CASE(S)
1) Dead + Roof Live (balanced): Lumber Increase=1.15, Plate Increase=1.15
Uniform Loads (plf)
Vert: 1-2=-64, 2-5=-104(F=-40), 2-6=-20
2) Dead + 0.75 Roof Live (balanced): Lumber Increase=1.15, Plate Increase=1.15
Uniform Loads (plf)
Vert: 1-2=-52, 2-5=-92(F=-40), 2-6=-20

City of Portland
REVIEWED FOR CODE COMPLIANCE
APR 24 2017
Permit Number

REGISTERED PROFESSIONAL ENGINEER
89200PE
OREGON
MAY 14, 2014
DAVID MERRILL BAXTER

EXPIRES: 12/31/2017
March 9,2017

Continued on page 2

MiTek
250 Klug Circle
Corona, CA 92880

LOAD CASE(S)

3) Dead + Uninhabitable Attic Without Storage: Lumber Increase=1.25, Plate Increase=1.25
Uniform Loads (plf)
Vert: 1-2=-14, 2-5=-54(F=-40), 2-6=-40

4) Dead + 0.6 C-C Wind (Pos. Internal) Case 1: Lumber Increase=1.60, Plate Increase=1.60
Uniform Loads (plf)
Vert: 1-2=62, 2-8=0(F=-40), 5-8=-7(F=-40), 2-6=-12
Horz: 1-2=-71, 2-8=-49, 5-8=-41

5) Dead + 0.6 C-C Wind (Pos. Internal) Case 2: Lumber Increase=1.60, Plate Increase=1.60
Uniform Loads (plf)
Vert: 1-2=27, 2-9=-7(F=-40), 5-9=0(F=-40), 2-6=-12
Horz: 1-2=-35, 2-9=-41, 5-9=-49

6) Dead + 0.6 C-C Wind (Neg. Internal) Case 1: Lumber Increase=1.60, Plate Increase=1.60
Uniform Loads (plf)
Vert: 1-2=18, 2-5=-92(F=-40), 2-6=-20
Horz: 1-2=-32, 2-5=38

7) Dead + 0.6 C-C Wind (Neg. Internal) Case 2: Lumber Increase=1.60, Plate Increase=1.60
Uniform Loads (plf)
Vert: 1-2=-46, 2-5=-92(F=-40), 2-6=-20
Horz: 1-2=32, 2-5=38

8) Dead + 0.6 MWFRS Wind (Pos. Internal) Left: Lumber Increase=1.60, Plate Increase=1.60
Uniform Loads (plf)
Vert: 1-2=3, 2-5=-52(F=-40), 2-6=-12
Horz: 1-2=-12, 2-5=3

9) Dead + 0.6 MWFRS Wind (Pos. Internal) Right: Lumber Increase=1.60, Plate Increase=1.60
Uniform Loads (plf)
Vert: 1-2=10, 2-5=-23(F=-40), 2-6=-12
Horz: 1-2=-19, 2-5=-25

10) Dead + 0.6 MWFRS Wind (Neg. Internal) Left: Lumber Increase=1.60, Plate Increase=1.60
Uniform Loads (plf)
Vert: 1-2=-24, 2-5=-70(F=-40), 2-6=-20
Horz: 1-2=10, 2-5=16

11) Dead + 0.6 MWFRS Wind (Neg. Internal) Right: Lumber Increase=1.60, Plate Increase=1.60
Uniform Loads (plf)
Vert: 1-2=5, 2-5=-42(F=-40), 2-6=-20
Horz: 1-2=-19, 2-5=-12

12) Dead + 0.6 MWFRS Wind (Pos. Internal) 1st Parallel: Lumber Increase=1.60, Plate Increase=1.60
Uniform Loads (plf)
Vert: 1-2=30, 2-4=-4(F=-40), 4-5=-17(F=-40), 2-6=-12
Horz: 1-2=-38, 2-4=-44, 4-5=-31

13) Dead + 0.6 MWFRS Wind (Pos. Internal) 2nd Parallel: Lumber Increase=1.60, Plate Increase=1.60
Uniform Loads (plf)
Vert: 1-2=5, 2-5=-29(F=-40), 2-6=-12
Horz: 1-2=-13, 2-5=-20

14) Dead + 0.6 MWFRS Wind (Pos. Internal) 3rd Parallel: Lumber Increase=1.60, Plate Increase=1.60
Uniform Loads (plf)
Vert: 1-2=16, 2-5=-17(F=-40), 2-6=-12
Horz: 1-2=-25, 2-5=-31

15) Dead + 0.6 MWFRS Wind (Pos. Internal) 4th Parallel: Lumber Increase=1.60, Plate Increase=1.60
Uniform Loads (plf)
Vert: 1-2=5, 2-5=-29(F=-40), 2-6=-12
Horz: 1-2=-13, 2-5=-20

16) Dead + 0.6 MWFRS Wind (Neg. Internal) 1st Parallel: Lumber Increase=1.60, Plate Increase=1.60
Uniform Loads (plf)
Vert: 1-2=24, 2-4=-22(F=-40), 4-5=-36(F=-40), 2-6=-20
Horz: 1-2=-38, 2-4=-32, 4-5=-18

17) Dead + 0.6 MWFRS Wind (Neg. Internal) 2nd Parallel: Lumber Increase=1.60, Plate Increase=1.60
Uniform Loads (plf)
Vert: 1-2=-1, 2-5=-47(F=-40), 2-6=-20
Horz: 1-2=-13, 2-5=-7

18) Dead: Lumber Increase=0.90, Plate Increase=0.90 Plt. metal=0.90
Uniform Loads (plf)
Vert: 1-2=-14, 2-5=-54(F=-40), 2-6=-20

19) Dead + 0.75 Roof Live (bal.) + 0.75(0.6 MWFRS Wind (Neg. Int) Left): Lumber Increase=1.60, Plate Increase=1.60
Uniform Loads (plf)
Vert: 1-2=-59, 2-5=-103(F=-40), 2-6=-20
Horz: 1-2=7, 2-5=12

20) Dead + 0.75 Roof Live (bal.) + 0.75(0.6 MWFRS Wind (Neg. Int) Right): Lumber Increase=1.60, Plate Increase=1.60
Uniform Loads (plf)
Vert: 1-2=-37, 2-5=-82(F=-40), 2-6=-20
Horz: 1-2=-14, 2-5=-9

21) Dead + 0.75 Roof Live (bal.) + 0.75(0.6 MWFRS Wind (Neg. Int) 1st Parallel): Lumber Increase=1.60, Plate Increase=1.60
Uniform Loads (plf)
Vert: 1-2=-23, 2-4=-68(F=-40), 4-5=-78(F=-40), 2-6=-20
Horz: 1-2=-29, 2-4=-24, 4-5=-14

22) Dead + 0.75 Roof Live (bal.) + 0.75(0.6 MWFRS Wind (Neg. Int) 2nd Parallel): Lumber Increase=1.60, Plate Increase=1.60

City of Portland
REVIEWED FOR CODE COMPLIANCE
APR 24 2017
Permit Number

Continued on page 3

LOAD CASE(S)

Uniform Loads (plf)

Vert: 1-2=-42, 2-5=-86(F=-40), 2-6=-20

Horz: 1-2=-10, 2-5=-5

City of Portland
REVIEWED FOR CODE COMPLIANCE

APR 24 2017

Permit Number

Job	Truss	Truss Type	Qty	Ply	F.I.R.E.
17-CP8204	JA06	Jack-Open	2	1	K2936698 Job Reference (optional)

PRECISION TRUSS & LUMBER, INC., CLACKAMAS,OR. 97015

8.100 s Jan 9 2017 MiTek Industries, Inc. Thu Mar 09 11:24:06 2017 Page 1
ID:Wk6d7S9BXqoyW2Z56Q4BD0zd0Jc-Y6ydrjllq17LYAOBqXgAZJm?bDM7WwGEbDf?A7zcg77

-2-0-0 | 3-0-5 | 5-11-4 | 11-10-3
2-0-0 | 3-0-5 | 2-10-15 | 5-10-15

Scale: 1/4"=1'

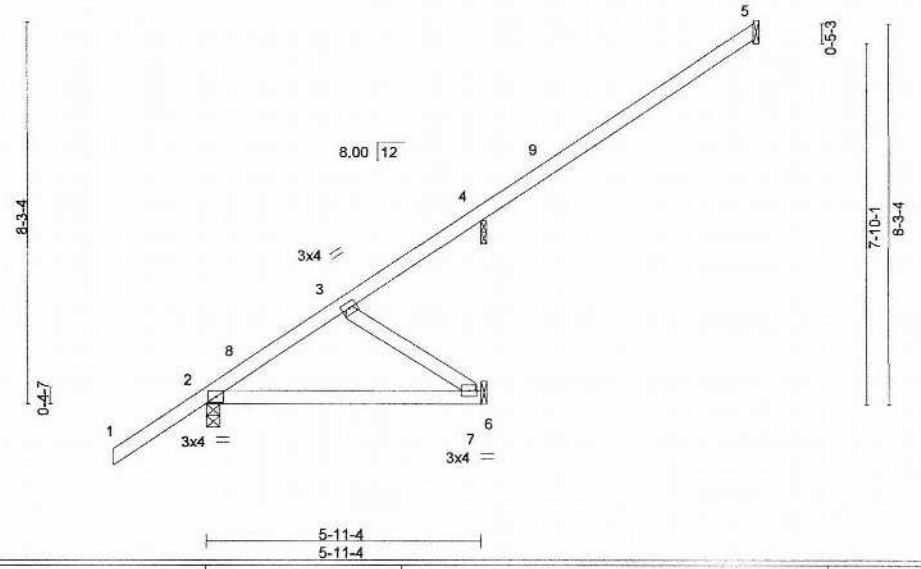

LOADING (psf)		SPACING-	2-0-0	CSI.		DEFL.	in	(loc)	l/defl	L/d	PLATES	GRIP
TCLL	25.0	Plate Grip DOL	1.15	TC	0.84	Vert(LL)	-0.05	2-7	>999	240	MT20	185/148
TCDL	7.0	Lumber DOL	1.15	BC	0.39	Vert(TL)	-0.14	2-7	>503	180		
BCLL	0.0 *	Rep Stress Incr	NO	WB	0.10	Horz(TL)	-0.00	5	n/a	n/a		
BCDL	10.0	Code IRC2012/TPI2007		Matrix-P							Weight: 35 lb	FT = 0%

LUMBER-
TOP CHORD 2x4 DF No.1&Btr
BOT CHORD 2x4 DF No.2
WEBS 2x4 HF Std

BRACING-
TOP CHORD Structural wood sheathing directly applied or 5-11-4 oc purlins.
BOT CHORD Rigid ceiling directly applied or 10-0-0 oc bracing.

MiTek recommends that Stabilizers and required cross bracing be installed during truss erection, in accordance with Stabilizer Installation guide.

REACTIONS. All bearings Mechanical except (jt=length) 2=0-3-8, 4=0-1-8.
(lb) - Max Horz 2=348(LC 12)
Max Uplift All uplift 100 lb or less at joint(s) 4
Max Grav All reactions 250 lb or less at joint(s) 7 except 5=315(LC 19), 2=519(LC 1), 4=456(LC 19)

FORCES. (lb) - Max. Comp./Max. Ten. - All forces 250 (lb) or less except when shown.
TOP CHORD 2-3=-383/60, 3-4=-301/245
BOT CHORD 2-7=-16/314
WEBS 3-7=-384/20

NOTES-
1) Wind: ASCE 7-10; Vult=120mph (3-second gust) V(IRC2012)=95mph; TCDL=4.2psf; BCDL=6.0psf; h=25ft; Cat. II; Exp C; enclosed; MWFRS (envelope) gable end zone; cantilever left and right exposed ; end vertical left and right exposed; Lumber DOL=1.60 plate grip DOL=1.60
2) C-C wind load user defined.
3) This truss has been designed for a 10.0 psf bottom chord live load nonconcurrent with any other live loads.
4) * This truss has been designed for a live load of 20.0psf on the bottom chord in all areas where a rectangle 3-6-0 tall by 2-0-0 wide will fit between the bottom chord and any other members.
5) Refer to girder(s) for truss to truss connections.
6) Provide mechanical connection (by others) of truss to bearing plate at joint(s) 4.
7) Provide mechanical connection (by others) of truss to bearing plate capable of withstanding 100 lb uplift at joint(s) 4.
8) Beveled plate or shim required to provide full bearing surface with truss chord at joint(s) 4.
9) Load case(s) 1, 2, 3, 4, 5, 6, 7, 8, 9, 10, 11, 12, 13, 14, 15, 16, 17, 18, 19, 20, 21, 22 has/have been modified. Building designer must review loads to verify that they are correct for the intended use of this truss.
10) In the LOAD CASE(S) section, loads applied to the face of the truss are noted as front (F) or back (B).

LOAD CASE(S)
1) Dead + Roof Live (balanced): Lumber Increase=1.15, Plate Increase=1.15
Uniform Loads (plf)
Vert: 1-2=-64, 2-5=-104(F=-40), 2-6=-20
2) Dead + 0.75 Roof Live (balanced): Lumber Increase=1.15, Plate Increase=1.15
Uniform Loads (plf)
Vert: 1-2=-52, 2-5=-92(F=-40), 2-6=-20

City of Portland
REVIEWED FOR CODE COMPLIANCE
APR 24 2017
Permit Number

REGISTERED PROFESSIONAL ENGINEER
89200PE
OREGON
MAY 14, 2014
DAVID MERRILL BAXTER

EXPIRES: 12/31/2017
March 9,2017

Continued on page 2

MiTek
250 Klug Circle
Corona, CA 92880

LOAD CASE(S)

3) Dead + Uninhabitable Attic Without Storage: Lumber Increase=1.25, Plate Increase=1.25
Uniform Loads (plf)
Vert: 1-2=-14, 2-5=-54(F=-40), 2-6=-40

4) Dead + 0.6 C-C Wind (Pos. Internal) Case 1: Lumber Increase=1.60, Plate Increase=1.60
Uniform Loads (plf)
Vert: 1-2=62, 2-8=0(F=-40), 5-8=-7(F=-40), 2-6=-12
Horz: 1-2=-71, 2-8=-49, 5-8=-41

5) Dead + 0.6 C-C Wind (Pos. Internal) Case 2: Lumber Increase=1.60, Plate Increase=1.60
Uniform Loads (plf)
Vert: 1-2=27, 2-9=-7(F=-40), 5-9=0(F=-40), 2-6=-12
Horz: 1-2=-35, 2-9=-41, 5-9=-49

6) Dead + 0.6 C-C Wind (Neg. Internal) Case 1: Lumber Increase=1.60, Plate Increase=1.60
Uniform Loads (plf)
Vert: 1-2=18, 2-5=-92(F=-40), 2-6=-20
Horz: 1-2=-32, 2-5=38

7) Dead + 0.6 C-C Wind (Neg. Internal) Case 2: Lumber Increase=1.60, Plate Increase=1.60
Uniform Loads (plf)
Vert: 1-2=-46, 2-5=-92(F=-40), 2-6=-20
Horz: 1-2=32, 2-5=38

8) Dead + 0.6 MWFRS Wind (Pos. Internal) Left: Lumber Increase=1.60, Plate Increase=1.60
Uniform Loads (plf)
Vert: 1-2=3, 2-5=-52(F=-40), 2-6=-12
Horz: 1-2=-12, 2-5=3

9) Dead + 0.6 MWFRS Wind (Pos. Internal) Right: Lumber Increase=1.60, Plate Increase=1.60
Uniform Loads (plf)
Vert: 1-2=10, 2-5=-23(F=-40), 2-6=-12
Horz: 1-2=-19, 2-5=-25

10) Dead + 0.6 MWFRS Wind (Neg. Internal) Left: Lumber Increase=1.60, Plate Increase=1.60
Uniform Loads (plf)
Vert: 1-2=-24, 2-5=-70(F=-40), 2-6=-20
Horz: 1-2=10, 2-5=16

11) Dead + 0.6 MWFRS Wind (Neg. Internal) Right: Lumber Increase=1.60, Plate Increase=1.60
Uniform Loads (plf)
Vert: 1-2=5, 2-5=-42(F=-40), 2-6=-20
Horz: 1-2=-19, 2-5=-12

12) Dead + 0.6 MWFRS Wind (Pos. Internal) 1st Parallel: Lumber Increase=1.60, Plate Increase=1.60
Uniform Loads (plf)
Vert: 1-2=30, 2-4=-4(F=-40), 4-5=-17(F=-40), 2-6=-12
Horz: 1-2=-38, 2-4=-44, 4-5=-31

13) Dead + 0.6 MWFRS Wind (Pos. Internal) 2nd Parallel: Lumber Increase=1.60, Plate Increase=1.60
Uniform Loads (plf)
Vert: 1-2=5, 2-5=-29(F=-40), 2-6=-12
Horz: 1-2=-13, 2-5=-20

14) Dead + 0.6 MWFRS Wind (Pos. Internal) 3rd Parallel: Lumber Increase=1.60, Plate Increase=1.60
Uniform Loads (plf)
Vert: 1-2=16, 2-5=-17(F=-40), 2-6=-12
Horz: 1-2=-25, 2-5=-31

15) Dead + 0.6 MWFRS Wind (Pos. Internal) 4th Parallel: Lumber Increase=1.60, Plate Increase=1.60
Uniform Loads (plf)
Vert: 1-2=5, 2-5=-29(F=-40), 2-6=-12
Horz: 1-2=-13, 2-5=-20

16) Dead + 0.6 MWFRS Wind (Neg. Internal) 1st Parallel: Lumber Increase=1.60, Plate Increase=1.60
Uniform Loads (plf)
Vert: 1-2=24, 2-4=-22(F=-40), 4-5=-36(F=-40), 2-6=-20
Horz: 1-2=-38, 2-4=-32, 4-5=-18

17) Dead + 0.6 MWFRS Wind (Neg. Internal) 2nd Parallel: Lumber Increase=1.60, Plate Increase=1.60
Uniform Loads (plf)
Vert: 1-2=-1, 2-5=-47(F=-40), 2-6=-20
Horz: 1-2=-13, 2-5=-7

18) Dead: Lumber Increase=0.90, Plate Increase=0.90 Plt. metal=0.90
Uniform Loads (plf)
Vert: 1-2=-14, 2-5=-54(F=-40), 2-6=-20

19) Dead + 0.75 Roof Live (bal.) + 0.75(0.6 MWFRS Wind (Neg. Int) Left): Lumber Increase=1.60, Plate Increase=1.60
Uniform Loads (plf)
Vert: 1-2=-59, 2-5=-103(F=-40), 2-6=-20
Horz: 1-2=7, 2-5=12

20) Dead + 0.75 Roof Live (bal.) + 0.75(0.6 MWFRS Wind (Neg. Int) Right): Lumber Increase=1.60, Plate Increase=1.60
Uniform Loads (plf)
Vert: 1-2=-37, 2-5=-82(F=-40), 2-6=-20
Horz: 1-2=-14, 2-5=-9

21) Dead + 0.75 Roof Live (bal.) + 0.75(0.6 MWFRS Wind (Neg. Int) 1st Parallel): Lumber Increase=1.60, Plate Increase=1.60
Uniform Loads (plf)
Vert: 1-2=-23, 2-4=-68(F=-40), 4-5=-78(F=-40), 2-6=-20
Horz: 1-2=-29, 2-4=-24, 4-5=-14

22) Dead + 0.75 Roof Live (bal.) + 0.75(0.6 MWFRS Wind (Neg. Int) 2nd Parallel): Lumber Increase=1.60, Plate Increase=1.60

City of Portland
REVIEWED FOR CODE COMPLIANCE
APR 24 2017
Permit Number

Continued on page 3

LOAD CASE(S)

Uniform Loads (plf)

Vert: 1-2=-42, 2-5=-86(F=-40), 2-6=-20

Horz: 1-2=-10, 2-5=-5

City of Portland
REVIEWED FOR CODE COMPLIANCE

APR 24 2017

Permit Number

Job	Truss	Truss Type	Qty	Ply	F.I.R.E.
17-CP8204	JAS01	Jack-Open	4	1	K2936699 Job Reference (optional)

PRECISION TRUSS & LUMBER, INC., CLACKAMAS,OR. 97015

8.100 s Jan 9 2017 MiTek Industries, Inc. Thu Mar 09 11:24:06 2017 Page 1
ID:Wk6d7S9BXqoyW2Z56Q4BD0zd0Jc-Y6ydrjllq17LYAOBqXgAZJm8eDShWxpEbDf?A7zcg77

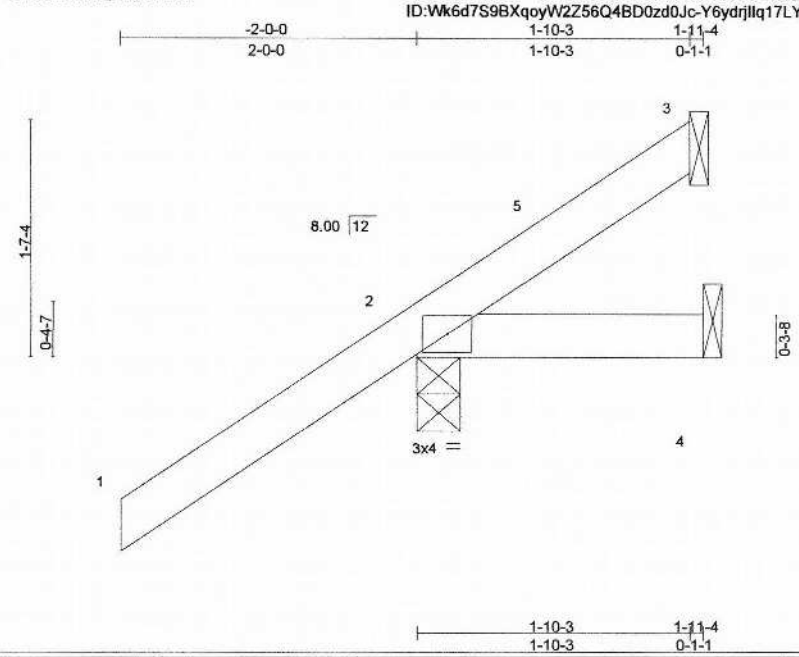

LOADING (psf)		SPACING-	2-0-0	CSI.		DEFL.	in	(loc)	l/defl	L/d	PLATES	GRIP
TCLL	25.0	Plate Grip DOL	1.15	TC	0.26	Vert(LL)	-0.00	2	>999	240	MT20	220/195
TCDL	7.0	Lumber DOL	1.15	BC	0.03	Vert(TL)	-0.00	2-4	>999	180		
BCLL	0.0 *	Rep Stress Incr	YES	WB	0.00	Horz(TL)	-0.00	3	n/a	n/a		
BCDL	10.0	Code IRC2012/TPI2007		Matrix-P							Weight: 9 lb	FT = 0%

LUMBER-
TOP CHORD 2x4 DF No.2
BOT CHORD 2x4 DF No.2

BRACING-
TOP CHORD Structural wood sheathing directly applied or 1-11-4 oc purlins.
BOT CHORD Rigid ceiling directly applied or 10-0-0 oc bracing.

MiTek recommends that Stabilizers and required cross bracing be installed during truss erection, in accordance with Stabilizer Installation guide.

REACTIONS. (lb/size) 2=280/0-3-8, 4=19/Mechanical, 3=-15/Mechanical
Max Horz 2=105(LC 12)
Max Uplift 2=-112(LC 12), 3=-15(LC 1)
Max Grav 2=280(LC 1), 4=38(LC 3), 3=21(LC 8)

FORCES. (lb) - Max. Comp./Max. Ten. - All forces 250 (lb) or less except when shown.

NOTES-
1) Wind: ASCE 7-10; Vult=120mph (3-second gust) V(IRC2012)=95mph; TCDL=4.2psf; BCDL=6.0psf; h=25ft; Cat. II; Exp C; enclosed; MWFRS (envelope) gable end zone and C-C Exterior(2) -2-0-0 to 1-0-0, Interior(1) 1-0-0 to 1-10-1 zone; cantilever left and right exposed ; end vertical left and right exposed;C-C for members and forces & MWFRS for reactions shown; Lumber DOL=1.60 plate grip DOL=1.60
2) This truss has been designed for a 10.0 psf bottom chord live load nonconcurrent with any other live loads.
3) * This truss has been designed for a live load of 20.0psf on the bottom chord in all areas where a rectangle 3-6-0 tall by 2-0-0 wide will fit between the bottom chord and any other members.
4) Refer to girder(s) for truss to truss connections.
5) Provide mechanical connection (by others) of truss to bearing plate capable of withstanding 100 lb uplift at joint(s) 3 except (jt=lb) 2=112.

City of Portland
REVIEWED FOR CODE COMPLIANCE
APR 24 2017
Permit Number

REGISTERED PROFESSIONAL ENGINEER
89200PE
OREGON
MAY 14, 2014
DAVID MERRILL BAXTER

EXPIRES: 12/31/2017
March 9,2017

MiTek
250 Klug Circle
Corona, CA 92880

Job	Truss	Truss Type	Qty	Ply	F.I.R.E.
17-CP8204	JAS02	Jack-Open	4	1	K2936700 Job Reference (optional)

PRECISION TRUSS & LUMBER, INC., CLACKAMAS,OR. 97015 8.100 s Jan 9 2017 MiTek Industries, Inc. Thu Mar 09 11:24:07 2017 Page 1
ID:Wk6d7S9BXqoyW2Z56Q4BD0zd0Jc-0IW?23INbKFCAKzNOEBP6XJKUdowFN3NptOYiazcg76

-2-0-0 | 1-11-4 | 3-10-3
2-0-0 | 1-11-4 | 1-10-15

Scale = 1:22.1

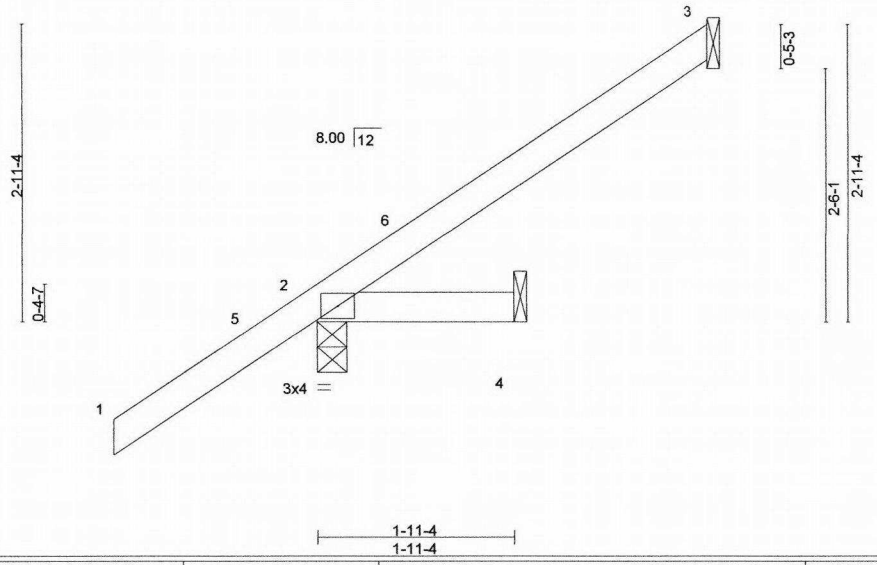

LOADING (psf)		SPACING-	2-0-0	CSI.		DEFL.	in	(loc)	l/defl	L/d	PLATES	GRIP
TCLL	25.0	Plate Grip DOL	1.15	TC	0.25	Vert(LL)	-0.00	2	>999	240	MT20	220/195
TCDL	7.0	Lumber DOL	1.15	BC	0.03	Vert(TL)	-0.00	2-4	>999	180		
BCLL	0.0 *	Rep Stress Incr	YES	WB	0.00	Horz(TL)	-0.00	3	n/a	n/a		
BCDL	10.0	Code IRC2012/TPI2007		Matrix-P							Weight: 12 lb	FT = 0%

LUMBER-
TOP CHORD 2x4 DF No.2
BOT CHORD 2x4 DF No.2

BRACING-
TOP CHORD Structural wood sheathing directly applied or 1-11-4 oc purlins.
BOT CHORD Rigid ceiling directly applied or 10-0-0 oc bracing.

MiTek recommends that Stabilizers and required cross bracing be installed during truss erection, in accordance with Stabilizer Installation guide.

REACTIONS. (lb/size) 3=85/Mechanical, 2=304/0-3-8, 4=19/Mechanical
Max Horz 2=163(LC 12)
Max Uplift 3=-82(LC 12), 2=-102(LC 12)
Max Grav 3=96(LC 19), 2=304(LC 1), 4=38(LC 3)

FORCES. (lb) - Max. Comp./Max. Ten. - All forces 250 (lb) or less except when shown.

NOTES-
1) Wind: ASCE 7-10; Vult=120mph (3-second gust) V(IRC2012)=95mph; TCDL=4.2psf; BCDL=6.0psf; h=25ft; Cat. II; Exp C; enclosed; MWFRS (envelope) gable end zone and C-C Exterior(2) -2-0-0 to 1-0-0, Interior(1) 1-0-0 to 3-9-7 zone; cantilever left and right exposed ; end vertical left and right exposed;C-C for members and forces & MWFRS for reactions shown; Lumber DOL=1.60 plate grip DOL=1.60
2) This truss has been designed for a 10.0 psf bottom chord live load nonconcurrent with any other live loads.
3) * This truss has been designed for a live load of 20.0psf on the bottom chord in all areas where a rectangle 3-6-0 tall by 2-0-0 wide will fit between the bottom chord and any other members.
4) Refer to girder(s) for truss to truss connections.
5) Provide mechanical connection (by others) of truss to bearing plate capable of withstanding 100 lb uplift at joint(s) 3 except (jt=lb) 2=102.

City of Portland
REVIEWED FOR CODE COMPLIANCE
APR 24 2017
Permit Number

REGISTERED PROFESSIONAL ENGINEER
89200PE
OREGON
MAY 14, 2014
DAVID MERRILL BAXTER

EXPIRES: 12/31/2017
March 9,2017

MiTek
250 Klug Circle
Corona, CA 92880

Symbols

PLATE LOCATION AND ORIENTATION

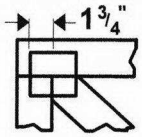

Center plate on joint unless x, y offsets are indicated. Dimensions are in ft-in-sixteenths. Apply plates to both sides of truss and fully embed teeth.

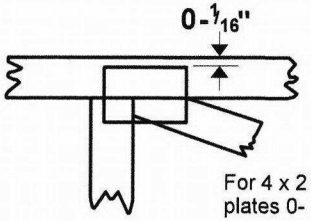

For 4 x 2 orientation, locate plates 0- 1/16" from outside edge of truss.

This symbol indicates the required direction of slots in connector plates.

*** Plate location details available in MiTek 20/20 software or upon request.**

PLATE SIZE

4 x 4

The first dimension is the plate width measured perpendicular to slots. Second dimension is the length parallel to slots.

LATERAL BRACING LOCATION

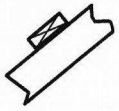

Indicated by symbol shown and/or by text in the bracing section of the output. Use T or I bracing if indicated.

BEARING

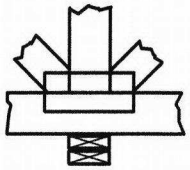

Indicates location where bearings (supports) occur. Icons vary but reaction section indicates joint number where bearings occur. Min size shown is for crushing only.

Industry Standards:

ANSI/TPI1: National Design Specification for Metal Plate Connected Wood Truss Construction.
DSB-89: Design Standard for Bracing.
BCSI: Building Component Safety Information, Guide to Good Practice for Handling, Installing & Bracing of Metal Plate Connected Wood Trusses.

Numbering System

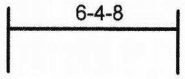

dimensions shown in ft-in-sixteenths (Drawings not to scale)

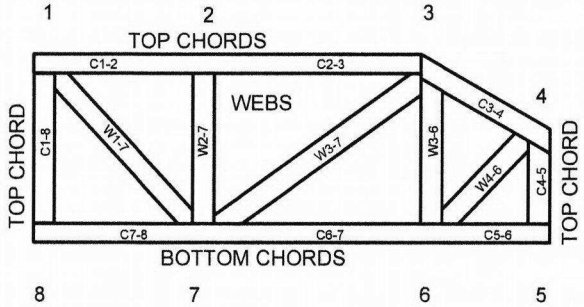

JOINTS ARE GENERALLY NUMBERED/LETTERED CLOCKWISE AROUND THE TRUSS STARTING AT THE JOINT FARTHEST TO THE LEFT.

CHORDS AND WEBS ARE IDENTIFIED BY END JOINT NUMBERS/LETTERS.

PRODUCT CODE APPROVALS

ICC-ES Reports:

ESR-1311, ESR-1352, ESR1988
ER-3907, ESR-2362, ESR-1397, ESR-3282

Trusses are designed for wind loads in the plane of the truss unless otherwise shown.

Lumber design values are in accordance with ANSI/TPI 1 section 6.3 These truss designs rely on lumber values established by others.

MiTek Engineering Reference Sheet: MII-7473 rev. 10/03/2015

General Safety Notes

Failure to Follow Could Cause Property Damage or Personal Injury

1. Additional stability bracing for truss system, e.g. diagonal or X-bracing, is always required. See BCSI.
2. Truss bracing must be designed by an engineer. For wide truss spacing, individual lateral braces themselves may require bracing, or alternative Tor I bracing should be considered.
3. Never exceed the design loading shown and never stack materials on inadequately braced trusses.
4. Provide copies of this truss design to the building designer, erection supervisor, property owner and all other interested parties.
5. Cut members to bear tightly against each other.
6. Place plates on each face of truss at each joint and embed fully. Knots and wane at joint locations are regulated by ANSI/TPI 1.
7. Design assumes trusses will be suitably protected from the environment in accord with ANSI/TPI 1.
8. Unless otherwise noted, moisture content of lumber shall not exceed 19% at time of fabrication.
9. Unless expressly noted, this design is not applicable for use with fire retardant, preservative treated, or green lumber.
10. Camber is a non-structural consideration and is the responsibility of truss fabricator. General practice is to camber for dead load deflection.
11. Plate type, size, orientation and location dimensions indicated are minimum plating requirements.
12. Lumber used shall be of the species and size, and in all respects, equal to or better than that specified.
13. Top chords must be sheathed or purlins provided at spacing indicated on design.
14. Bottom chords require lateral bracing at 10 ft. spacing, or less, if no ceiling is installed, unless otherwise noted.
15. Connections not shown are the responsibility of others.
16. Do not cut or alter truss member or plate without prior approval of an engineer.
17. Install and load vertically unless indicated otherwise.
18. Use of green or treated lumber may pose unacceptable environmental, health or performance risks. Consult with project engineer before use.
19. Review all portions of this design (front, back, words and pictures) before use. Reviewing pictures alone is not sufficient.
20. Design assumes manufacture in accordance with ANSI/TPI 1 Quality Criteria.