ABBREVIATIONS

A	AMPERE
AC	ALTERNATING CURRENT
BLDG	BUILDING
CONC	CONCRETE
C	COMBINER BOX
D	DISTRIBUTION PANEL
DC	DIRECT CURRENT
EGC	EQUIPMENT GROUNDING CONDUCTOR
(E)	EXISTING
EMT	ELECTRICAL METALLIC TUBING
G	SOLAR GUARD METER
GALV	GALVANIZED
GEC	GROUNDING ELECTRODE CONDUCTOR
GND	GROUND
HDG	HOT DIPPED GALVANIZED
I	CURRENT
Imp	CURRENT AT MAX POWER
INVS	INVERTERS
Isc	SHORT CIRCUIT CURRENT
kVA	KILOVOLT AMPERE
kW	KILOWATT
LBW	LOAD BEARING WALL
MIN	MINIMUM
MIR	MIRROR
(N)	NEW
NEC	NATIONAL ELECTRIC CODE
NIC	NOT IN CONTRACT
NTS	NOT TO SCALE
OC	ON CENTER
P	PANEL BOARD
PL	PROPERTY LINES
PV	PHOTOVOLTAIC
PVC	POLYVINYL CHLORIDE
S	SUBPANEL
SCH	SCHEDULE
SS	STAINLESS STEEL
SSD	SEE STRUCTURAL DRAWINGS
STC	STANDARD TESTING CONDITIONS
SWH	SOLAR WATER HEATER
TYP	TYPICAL
UON	UNLESS OTHERWISE NOTED
UPS	UNINTERRUPTIBLE POWER SUPPLY
V	VOLT
Vmp	VOLTAGE AT MAX POWER
Voc	VOLTAGE AT OPEN CIRCUIT
W	WATT
3R	NEMA 3R, RAINTIGHT

ELECTRICAL NOTES

1. WHERE ALL TERMINALS OF THE DISCONNECTING MEANS MAY BE ENERGIZED IN THE OPEN POSITION, A SIGN WILL BE PROVIDED WARNING OF THE HAZARDS PER ART. 690.17.
2. EACH UNGROUNDED CONDUCTOR OF THE MULTIWIRE BRANCH CIRCUIT WILL BE IDENTIFIED BY PHASE AND SYSTEM PER ART. 210.5.
3. A NATIONALLY-RECOGNIZED TESTING LABORATORY SHALL LIST ALL EQUIPMENT IN COMPLIANCE WITH ART. 110.3.
4. CIRCUITS OVER 250V TO GROUND SHALL COMPLY WITH ART. 250.97, 250.92(B)
5. DC CONDUCTORS EITHER DO NOT ENTER BUILDING OR ARE RUN IN METALLIC RACEWAYS OR ENCLOSURES TO THE FIRST ACCESSIBLE DC DISCONNECTING MEANS PER ART. 690.31(E).
6. ALL WIRES SHALL BE PROVIDED WITH STRAIN RELIEF AT ALL ENTRY INTO BOXES AS REQUIRED BY UL LISTING.
7. MODULE FRAMES SHALL BE GROUNDED AT THE UL-LISTED LOCATION PROVIDED BY THE MANUFACTURER USING UL LISTED GROUNDING HARDWARE.
8. ALL EXPOSED METAL PARTS (MODULE FRAMES, RAIL, BOXES, ETC.) SHALL BE GROUNDED USING UL LISTED LAY-IN LUGS LISTED FOR THE PURPOSE. POSTS SHALL BE MADE ELECTRICALLY CONTINUOUS WITH ATTACHED RAIL.
9. MODULE FRAMES, RAIL, AND POSTS SHALL BE BONDED WITH EQUIPMENT GROUND CONDUCTORS AND GROUNDED AT THE MAIN ELECTRIC PANEL.
10. THE DC GROUNDING ELECTRODE CONDUCTOR SHALL BE SIZED ACCORDING TO ART. 250.166(B) & 690.47.

INDEX

PV1 COVER SHEET
PV2 SITE PLAN
PV3 STRUCTURAL VIEWS
PV4 UPLIFT CALCULATIONS
PV5 THREE LINE DIAGRAM
PV6 ELECTRICAL CALCULATIONS
PV7 SITE PLAN PLACARD
CUTSHEETS ATTACHED

CUTSHEETS ATTACHED

GENERAL NOTES

1. THIS SYSTEM IS GRID-INTERTIED VIA A UL-LISTED POWER-CONDITIONING INVERTER.
2. THIS SYSTEM HAS NO BATTERIES, NO UPS.
3. PHOTOVOLTAIC SOURCE AND INPUT CIRCUITS AND INVERTER INPUT CIRCUIT ARE UNGROUNDED.
4. SOLAR MOUNTING FRAMES ARE TO BE GROUNDED.
5. ALL WORK TO BE DONE TO THE 2010 OBC BASED ON THE 2009 IBC.
6. ALL ELECTRICAL WORK SHALL COMPLY WITH THE CURRENT NATIONAL ELECTRIC CODE AS AMENDED BY THE OREGON ELECTRICAL SPECIALTY CODE.

LICENSE

OR # 180498

JURISDICTION NOTES

City of Portland
REVIEWED FOR CODE COMPLIANCE
DEC 03 2013
Permit Number

VICINITY MAP

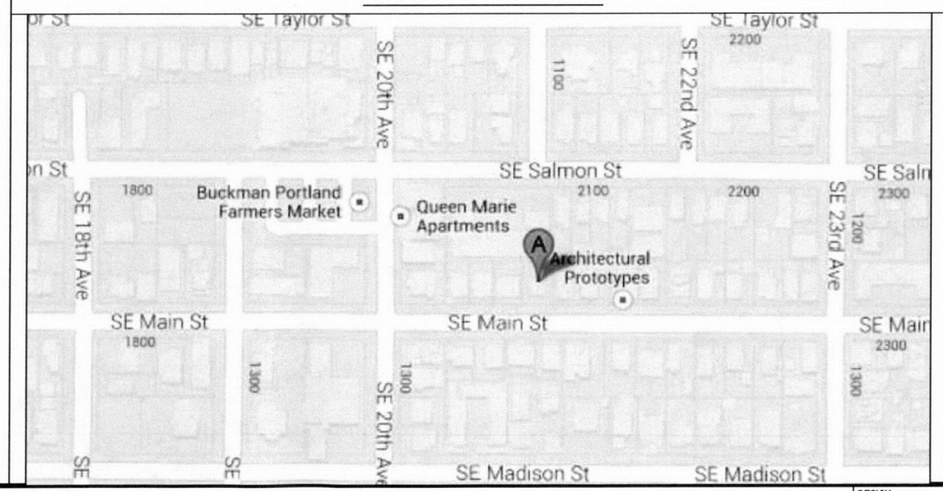

REV	BY	DATE	COMMENTS

CONFIDENTIAL – THE INFORMATION HEREIN CONTAINED SHALL NOT BE USED FOR THE BENEFIT OF ANYONE EXCEPT SOLARCITY INC., NOR SHALL IT BE DISCLOSED IN WHOLE OR IN PART TO OTHERS OUTSIDE THE RECIPIENT'S ORGANIZATION, EXCEPT IN CONNECTION WITH THE SALE AND USE OF THE RESPECTIVE SOLARCITY EQUIPMENT, WITHOUT THE WRITTEN PERMISSION OF SOLARCITY INC.

JOB NUMBER: JB-9721539 00
MARKET: NH
PROJECT MANAGER:
PAYMENT TYPE: PPA
MODULES: (18) TRINA SOLAR # TSM-250PA05.18
MOUNTING SYSTEM: 6" SOLARCITY SLEEKPOST (FASTJACK)
INVERTER: (1) POWER-ONE # AURORA PVI-3.6-OUTD-S-US

PREMISE OWNER: SCHLANSKY, BARRY AND NEBORSKY, REBECCA
2049 SE MAIN
PORTLAND, OR 97214

AHJ: Portland

DESCRIPTION: RESIDENCE
4.5KW ROOF MOUNT PV SYSTEM

PAGE NAME: COVER SHEET

DESIGN: N. NISCHAL

SHEET: PV 1 REV: DATE: 8/29/2013

SolarCity
3055 Clearview Way San Mateo, CA 94402
T:(650) 638-1028 F:(650) 638-1029
(888)-SOL-CITY (765-2489) www.solarcity.com

2
13-2393 RS

MP1	PITCH: 5	ARRAY PITCH: 5
	AZIMUTH: 180	ARRAY AZIMUTH: 180
	MATERIAL: Single Ply Membrane	STORY: Two stories

TOTAL ARRAY AREA: 321sqft
TOTAL ROOF AREA: 1698sqft

TOTAL ARRAY AREA IS ~19% OF TOTAL ROOF AREA.

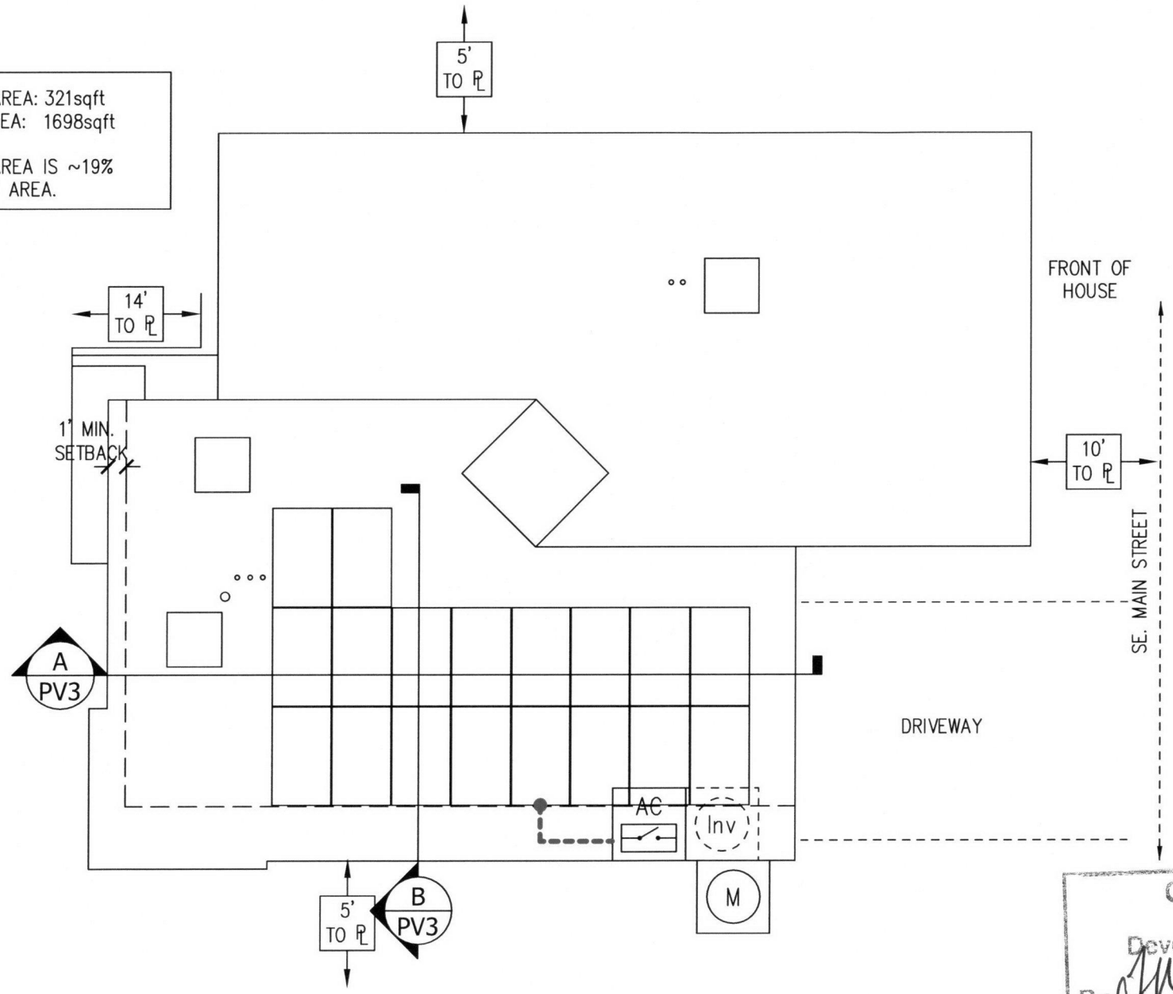

City of Portland
REVIEWED FOR CODE COMPLIANCE
DEC 03 2013
Permit Number

City of Portland
Bureau of Development Services
By JMG Date 12/3/13
Approved by Planning and Zoning Review

LEGEND

- (M) (E) UTILITY METER & WARNING LABEL
- (Inv) INVERTER W/ INTEGRATED DC DISCO & WARNING LABELS
- DC DISCONNECT & WARNING LABELS
- AC DISCONNECT & WARNING LABELS
- (J) JUNCTION BOX
- (C) DC COMBINER BOX & WARNING
- (D) DISTRIBUTION PANEL & WARNING
- (LC) LOAD CENTER & WARNING LABELS
- (M) DEDICATED PV SYSTEM METER
- CONDUIT RUN ON EXTERIOR
- CONDUIT RUN ON INTERIOR
- GATE/FENCE
- INTERIOR EQUIPMENT

SITE PLAN

Scale: 1/8" = 1'

0 1' 8' 16'

N E S W

CONFIDENTIAL – THE INFORMATION HEREIN CONTAINED SHALL NOT BE USED FOR THE BENEFIT OF ANYONE EXCEPT SOLARCITY INC., NOR SHALL IT BE DISCLOSED IN WHOLE OR IN PART TO OTHERS OUTSIDE THE RECIPIENT'S ORGANIZATION, EXCEPT IN CONNECTION WITH THE SALE AND USE OF THE RESPECTIVE SOLARCITY EQUIPMENT, WITHOUT THE WRITTEN PERMISSION OF SOLARCITY INC.

JOB NUMBER: JB-9721539 00	
MARKET: NH	MODULES: (18) TRINA SOLAR # TSM-250PA05.18
PROJECT MANAGER:	MOUNTING SYSTEM: 6" SOLARCITY SLEEKPOST (FASTJACK)
PAYMENT TYPE: PPA	INVERTER: (1) POWER-ONE # AURORA PVI-3.6-OUTD-S-US

PREMISE OWNER: AHJ: Portland
SCHLANSKY, BARRY AND NEBORSKY, REBECCA
2049 SE MAIN
PORTLAND, OR 97214

DESCRIPTION:
RESIDENCE
4.5KW ROOF MOUNT PV SYSTEM

PAGE NAME:
SITE PLAN

DESIGN: N. NISCHAL

SHEET: PV 2 REV: DATE: 8/29/2013

SolarCity
3055 Clearview Way San Mateo, CA 94402
T:(650) 638-1028 F:(650) 638-1029
(888)-SOL-CITY (765-2489) www.solarcity.com

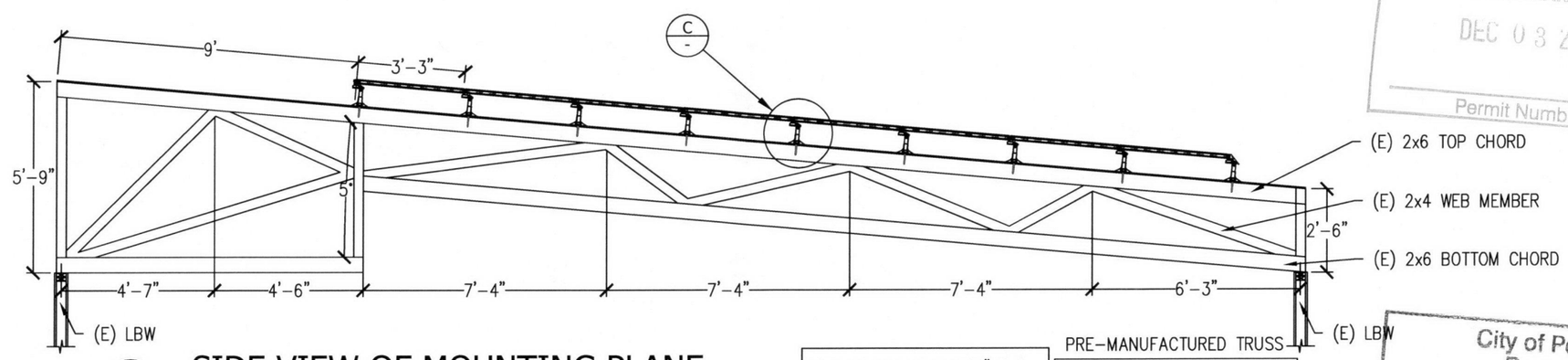

A SIDE VIEW OF MOUNTING PLANE

Scale: 1/4"=1'-0"

TOP CHORD: 2x6 @ 24" O.C. SUPPORT: 2x4 WEB MEMBER MAX SPAN: 7'-4"

STRUCTURE MEETS THE PRESCRIPTIVE REQUIREMENTS OF THE OSISC SECTION 305.4

City of Portland
REVIEWED FOR CODE COMPLIANCE
DEC 03 2013
Permit Number

City of Portland
Bureau of Development Services
By [illegible] Date 12/3/13
Approved by Planning and Zoning Review

B FRONT VIEW OF MP

Scale: 1/2"=1'-0"

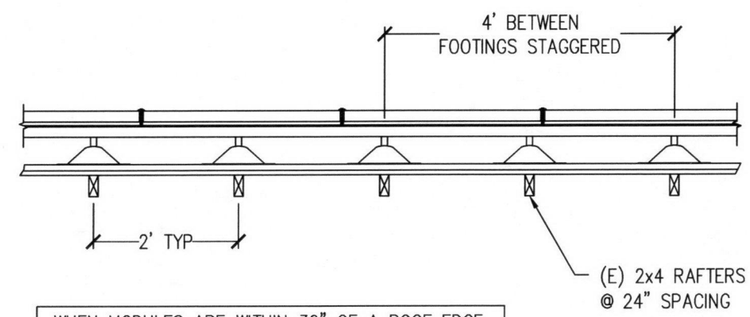

WHEN MODULES ARE WITHIN 36" OF A ROOF EDGE, STANDOFFS WILL BE PLACED NO MORE THAN 24" O.C

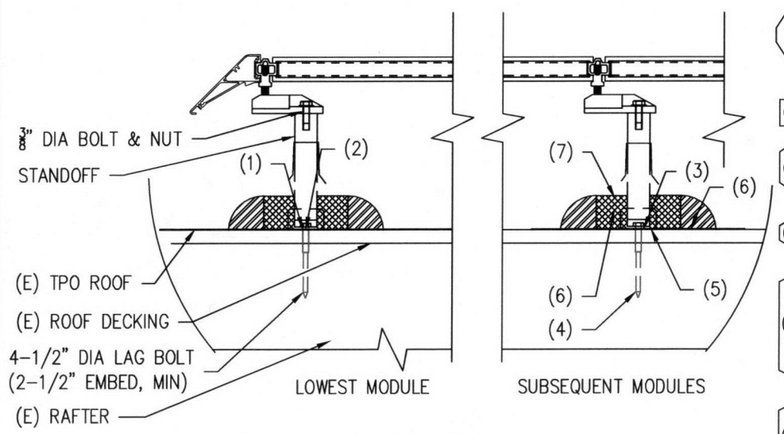

C STANDOFF

Scale: 1 1/2" = 1'

INSTALLATION ORDER	
(1)	LOCATE RAFTER, MARK RAFTER LOCATION, AND REMOVE TILE. PLACE STANDOFF BASE & DRILL PILOT HOLES AT THE RAFTER LOCATION.
(2)	CLEAN PAPER AROUND PILOT HOLE
(3)	SEAL PILOT HOLES AND BOTTOM OF STANDOFF WITH POLYURETHANE SEALANT
(4)	LAG STANDOFF INTO RAFTER, INSERT & TIGHTEN POST W/ CHANNEL LOCKS
(5)	APPLY M1 SEALANT BENEATH FLANGE BASE AND ON WALLS OF PENETRATION AND PIPE. MOUNT FLANGE WITH LAGS, INSTALL VERTICAL PIPE, AND PIPE CAP.
(6)	M-1 STRUCTURAL SEALANT AT BASE OF CHEMCURB AND AROUND PENETRATION.
(7)	1 PART POURABLE SEALANT.

CONFIDENTIAL – THE INFORMATION HEREIN CONTAINED SHALL NOT BE USED FOR THE BENEFIT OF ANYONE EXCEPT SOLARCITY INC., NOR SHALL IT BE DISCLOSED IN WHOLE OR IN PART TO OTHERS OUTSIDE THE RECIPIENT'S ORGANIZATION, EXCEPT IN CONNECTION WITH THE SALE AND USE OF THE RESPECTIVE SOLARCITY EQUIPMENT, WITHOUT THE WRITTEN PERMISSION OF SOLARCITY INC.

JOB NUMBER: JB-9721539 00	
MARKET: NH	MODULES: (18) TRINA SOLAR # TSM-250PA05.18
PROJECT MANAGER:	MOUNTING SYSTEM: 6" SOLARCITY SLEEKPOST (FASTJACK)
PAYMENT TYPE: PPA	INVERTER: (1) POWER-ONE # AURORA PVI-3.6-OUTD-S-US

PREMISE OWNER: SCHLANSKY, BARRY AND NEBORSKY, REBECCA
2049 SE MAIN
PORTLAND, OR 97214

AHJ: Portland

DESCRIPTION: RESIDENCE
4.5KW ROOF MOUNT PV SYSTEM

PAGE NAME: STRUCTURAL VIEWS

DESIGN: N. NISCHAL

SHEET: PV 3 REV: DATE: 8/29/2013

SolarCity
3055 Clearview Way San Mateo, CA 94402
T:(650) 638-1028 F:(650) 638-1029
(888)-SOL-CITY (765-2489) www.solarcity.com

UPLIFT CALCULATIONS

Input Variables

Required Variables

Mean roof height:	25
Exposure category:	C
Basic wind speed (or city in the future):	90
Importance factor (1 for residential):	1
Roof shape:	pitched
Roof angle (degrees):	5
Roof zone:	3
Contiguous sq. feet of array:	35
Least width of the building:	40
Obstructed wind flow?	TRUE

Local Topographical Features

(choose "standard " or refer to pictures right, and below)

Type of hill:	none
Hill height (h) (ft):	
Slope of hill (degrees):	
Horizontal distance from hilltop to house (x):	
Height from bottom of hill to mean roof height (z):	

Design Wind Pressures

P (lbs. per sq. ft.) = qh*Cn*G

Pd (downforce pressure) =	**11.27**
Pu (uplift pressure) =	**32.86**

Calculations and Values

Design wind pressures based upon:
ASCE 7-05 Chapter 6 Wind Loading

Equation 6.5.13.3: Component and Cladding Elements
Wind pressure P = qh*Cn*G

6.5.10: Velocity pressure
qh = 0.00256*Kz*Kzt*Kd*V^2*I

From Table 6-3:
Kz = 0.94
From Figure 6-4:
Kzt = 1.00
From Table 6-4:
Kd = 0.85
From figure 6-1:
V = 90
From table 6-1:
I = 1

From Velocity Pressure Equation:
qh = 16.57
From Figure 6-19B
Cn (uplift) = -2.33
Cn (down) = 0.80
From 6.5.8.1
G = 0.85

Max Tributary Area

		Feet	Inches
ZEP Landscape	X (E-W distance between standoffs) =	4	0
Trina TSM-2XXPA05	Y (N-S distance between standoffs) =	3	3
Amax (sq. ft.) = 0.5*L*X	Staggered Penetrations =	Yes	
L (length of panel in ft. perpendicular to rail) N/A			
X = 4.00	Module Rail Max. Span / Cantilever (in) =	N/A	N/A
Y = 3.25			
L = N/A			
Amax = 13.02			

Max Uplift Force on a Single Standoff

Pmax (lbs.) = Amax*Pu

Pmax = 428

Factor of safety = FI*D*NI/Pmax

5/16 x 4 in.	= Lag size and length
984	= Capacity (lbs) of 1 lag (NDS)
1	= NI (number of lags per standoff)
2.30	**= Factor of safety**

Dead Load Calculations

DL (lbs/sq. ft.) = (Mm+Mh)/(L*W)

L (length of Trina TSM-2XXPA05 modules)	5.41
W (width of Trina TSM-2XXPA05 modules)	3.25
Mm (weight of Trina TSM-2XXPA05 modules)	43.00
Mh (weight of hardware per module) =	12.02
DL =	**3.12**

Point Load Calculations

PL (lbs) = Amax*DL

PL = 41

Version 9_8

City of Portland
REVIEWED FOR CODE COMPLIANCE
DEC 03 2013
Permit Number

CONFIDENTIAL – THE INFORMATION HEREIN CONTAINED SHALL NOT BE USED FOR THE BENEFIT OF ANYONE EXCEPT SOLARCITY INC., NOR SHALL IT BE DISCLOSED IN WHOLE OR IN PART TO OTHERS OUTSIDE THE RECIPIENT'S ORGANIZATION, EXCEPT IN CONNECTION WITH THE SALE AND USE OF THE RESPECTIVE SOLARCITY EQUIPMENT, WITHOUT THE WRITTEN PERMISSION OF SOLARCITY INC.

JOB NUMBER: JB–9721539 00
MARKET: NH
MODULES: (18) TRINA SOLAR # TSM–250PA05.18
PROJECT MANAGER:
MOUNTING SYSTEM: 6" SOLARCITY SLEEKPOST (FASTJACK)
PAYMENT TYPE: PPA
INVERTER: (1) POWER–ONE # AURORA PVI–3.6–OUTD–S–US

PREMISE OWNER: SCHLANSKY, BARRY AND NEBORSKY, REBECCA
AHJ: Portland
2049 SE MAIN
PORTLAND, OR 97214

DESCRIPTION: RESIDENCE
4.5KW ROOF MOUNT PV SYSTEM

PAGE NAME: UPLIFT CALCULATIONS

DESIGN: N. NISCHAL
SHEET: PV 4
REV:
DATE: 8/29/2013

SolarCity
3055 Clearview Way San Mateo, CA 94402
T:(650) 638-1028 F:(650) 638-1029
(888)-SOL-CITY (765-2489) www.solarcity.com

GROUND SPECS	MAIN PANEL SPECS	GENERAL NOTES	INVERTER SPECS	MODULE SPECS	LICENSE
BOND (N) #6 GEC TO (E) UFER AT PANEL WITH IRREVERSIBLE CRIMP	(E) 200A MAIN SERVICE PANEL (E) 200/2P MAIN CIRCUIT BREAKER Panel Number: Meter Number:	Inv 1: DC Ungrounded	INV 1 — (1) POWER-ONE # AURORA PVI-3.6-OUTD-S-US LABEL: A Inverter; Zigbee, 3600W, 240V, 96% INV 2 INV 3	— (18) TRINA SOLAR # TSM-250PA05.18 PV Module; 250W, 227.5W PTC, 40MM, Black Frame, MC4, ZEP Enabled Voc: 37.6 Vpmax: 30.3 *MODULE CURRENT RATINGS ARE SHOWN AS Isc AND Imp IN THE DC STRINGS IDENTIFIER OF THE SINGLE LINE DIAGRAM.	OR # 180498 RGC, CGC1

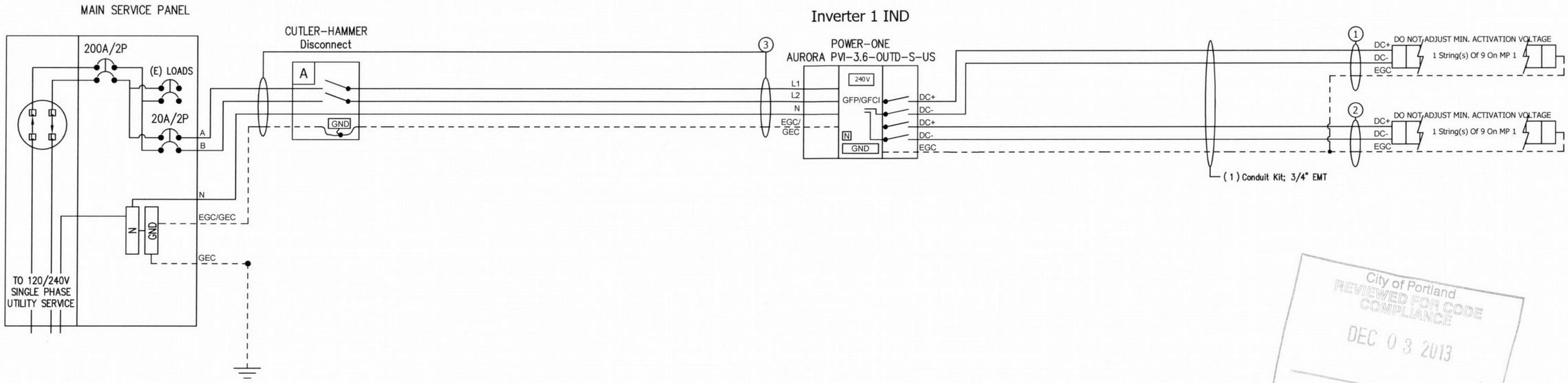

City of Portland
REVIEWED FOR CODE COMPLIANCE
DEC 03 2013
Permit Number

POI — (1) SQUARE D # HOM220 Breaker; 20A/2P, 2 Spaces — PV BACKFEED BREAKER

A — (1) CUTLER-HAMMER # DG321UGB Disconnect; 30A, 240Vac, Non-Fusible, NEMA 1
— (1) CUTLER-HAMMER # DG030NB Ground/Neutral Kit; 30A, General Duty (DG)

AC

3 — 15ft
- (1) AWG #10, THWN-2, Black
- (1) AWG #10, THWN-2, Red
- (1) AWG #10, THWN-2, White NEUTRAL Vmp = 240 VAC Imp = 16 AAC
- (1) AWG #6, THWN-2, Green EGC/GEC — (1) Conduit Kit; 3/4" EMT

DC

1 — 60ft
- (2) AWG #10, PV WIRE, Black Voc = 371.97 VDC Isc = 8.85 ADC
- (1) AWG #10, Solid Bare Copper EGC Vmp = 272.7 VDC Imp = 8.27 ADC
- (1) Conduit Kit; 3/4" EMT

2 — 60ft
- (2) AWG #10, PV WIRE, Black Voc = 371.97 VDC Isc = 8.85 ADC
- (1) AWG #10, Solid Bare Copper EGC Vmp = 272.7 VDC Imp = 8.27 ADC
- (1) Conduit Kit; 3/4" EMT

CONFIDENTIAL – THE INFORMATION HEREIN CONTAINED SHALL NOT BE USED FOR THE BENEFIT OF ANYONE EXCEPT SOLARCITY INC., NOR SHALL IT BE DISCLOSED IN WHOLE OR IN PART TO OTHERS OUTSIDE THE RECIPIENT'S ORGANIZATION, EXCEPT IN CONNECTION WITH THE SALE AND USE OF THE RESPECTIVE SOLARCITY EQUIPMENT, WITHOUT THE WRITTEN PERMISSION OF SOLARCITY INC.

JOB NUMBER: JB-9721539 00	
MARKET: NH	MODULES: (18) TRINA SOLAR # TSM-250PA05.18
PROJECT MANAGER:	MOUNTING SYSTEM: 6" SOLARCITY SLEEKPOST (FASTJACK)
PAYMENT TYPE: PPA	INVERTER: (1) POWER-ONE # AURORA PVI-3.6-OUTD-S-US

PREMISE OWNER: AHJ: Portland
SCHLANSKY, BARRY AND NEBORSKY, REBECCA
2049 SE MAIN
PORTLAND, OR 97214

DESCRIPTION:
RESIDENCE
4.5KW ROOF MOUNT PV SYSTEM

PAGE NAME:
THREE LINE DIAGRAM

DESIGN: N. NISCHAL

SHEET: PV 5 REV: DATE: 8/29/2013

SolarCity
3055 Clearview Way San Mateo, CA 94402
T:(650) 638-1028 F:(650) 638-1029
(888)-SOL-CITY (765-2489) www.solarcity.com

ELECTRICAL CALCULATIONS

City of Portland
REVIEWED FOR CODE COMPLIANCE
DEC 03 2013
Permit Number

1. Conductor Sizing per Art 690.8(B)(1)
a. Conductor must have 30 deg. C ampacity >= 125% of continuous current per Art 215.2(A)(1).

b. Conductor must have (after corrections for conditions of use) >= continuous current per Table 310.15(B)(16).

c. Evaluate conductor temperature at terminations per 110.14(C). Ampacity of wire derated for conditions of termination must be >= continuous current*1.25. All string terminations are rated at 90° C.

---

2. OCP Sizing per Art 690.8(B)(1)
a. Round up to next size per Art 240.4(B)

---

3. Conductor Sizing per Art 690.8(B)(1)
a. Conductor must have 30 deg. C ampacity >= 125% of continuous current per Art 215.2(A)(1).

b. Conductor must have (after corrections for conditions of use) >= continuous current per Table 310.15(B)(16).

c. Evaluate conductor temperature at terminations per Art 110.14(C). Ampacity of wire derated for conditions of termination must be >= continuous current*1.25. All branch terminations are rated at 75° C min.

---

4. OCP Sizing
a. Round up to next size per Art 240.4(B)

---

5. Conductor Sizing per Art 690.8(B)(1)
a. Conductor must have 30 deg. C ampacity >= 125% of continuous current per Art 215.2(A)(1).

b. Conductor must have (after corrections for conditions of use) >= continuous current per Table 310.15(B)(16).

c. Evaluate conductor temperature at terminations per Art 110.14(C). Ampacity of wire derated for conditions of termination must be >= continuous current*1.25. All inverter output terminations are rated at 75° C.

---

6. OCP Sizing
a. Round up to next size per Art 240.4(B)

7. Conductor Sizing per Art 690.8(B)(1)
a. Conductor must have 30 deg. C ampacity >= 125% of continuous current per Art 215.2(A)(1).

b. Conductor must have (after corrections for conditions of use) >= continuous current per Table 310.15(B)(16).

c. Evaluate conductor temperature at terminations per Art 110.14(C). Ampacity of wire derated for conditions of termination must be >= continuous current*1.25. All inverter output terminations are rated at 75° C min.

Module:	18 Trina TSM-250PA05.08 Black	227.5 Inv Pwr	W PTC	StrLen	
Inverter 1:	1 Power-One PVI-3.6-S	96.0%	4,000	3,931	9
Module:					
Inverter 2:					
Module:					
Inverter 3:					
Module:					
Inverter 4:					
Total:	18 modules	Total Inv Pwr	4,000	3,931 PTC	
		Total STC	4,500		

Photovoltaic Module Electrical Specifications:

			deg F	deg C
Voc=	37.6 V	Record Low Temp:	8	-13.3333333
Vmp=	30.3 V	Max Average Hi Temp:	81	27.22222222
Isc=	8.85 A	Record Hi Temp:	106	41
Imp=	8.27 A			
Tvoc=	-0.12032 V/deg C			
Tisc=	4.1595 mA/deg C			

Power-One Strings: Individual MPPT

Voltage Drop Calculations — Version 5_9.11

Vdrop = (Imp) * (2 * Length) * (Resistance) / (Vmp)

	Imp (A)	Max. Length (ft)	Wire			
String:	8.27	35	C AWG 10	at Max Ave Hi:	81 deg F	
Vdrop =	(8.27 A * 70 ft * 0.00124 Ohms) /			250 V =	0.29%	
Branch:	8.27	60	C AWG 10	at Max Ave Hi:	81 deg F	
Vdrop =	(8.27 A * 120 ft * 0.00124 Ohms) /			250 V =	0.49%	
				Total voltage drop in DC conductors =		0.78%
Inverter:	16.00	15	C AWG 10	at 240V		
Vdrop =	(16.00 A * 30 ft * 0.00120 Ohms) /			240 V	0.24%	
Combined	16.00	0	E AWG 06	at 240V		
Vdrop =	(16.00 A * 0 ft * 0.00049 Ohms) /			240 V	0.00%	
				Total voltage drop in AC conductors =		0.24%
				Total voltage drop in AC and DC conductors =		1.02%

String Type A and 2 Combined Strings Type A — Voc Correction Method: Manuf Tvoc data

Power-One PVI-3.6-S
9 Trina TSM-250PA05.08 Black

Voc=	338.4 V	Inverter Min Vdc Input:	120 Vdc
Vmp=	272.7 V	Min Vmp at Max Temp:	213 Vdc
Isc=	8.85 A	Max Voc at Min Temp:	380 Vdc
Imp=	8.27 A	Inverter Max Vdc Input:	600 Vdc
Icont=	11.06 A	Max String Size:	14
	Art 690.8(A)(1)	1-way wire length:	35 ft

1.a	Conductor: C AWG 10	PV Wire	
	Icont * 1.25 = (Amps)	13.83	
	30 deg C ampacity =	40	
1.b	Icont= (Amps)	11.06	
	Start ampacity	40	
	Temperature derate (%=F)	0.76	
	Conduit fill derate (%=#)	1	
	Derated ampacity	30.40	
1.c	Icont*1.25= (Amps)	13.83	
	Ampacity	40	
1.d	Icont * 1.25 = (Amps)	13.83	
	OCP size =	15	

Branch Circuit Type A — 1-way wire length: 60 ft

	1 strings per branch 1	1 strings per branch 2	
	9 modules per series string	9 modules per series strin	
Voc=	338.4 V	338.4 V	
Vmp=	272.7 V	272.7 V	
Isc=	8.85 A	8.85 A	
Imp=	8.27 A	8.27 A	
Icont=	11.06 A	11.06 A	Art 690.8(A)(1)

2.a	Conductor 1: C AWG 10	PV Wire	
	Conductor 2: C AWG 10	PV Wire	
		Conductor 1:	Conductor 2:
	Icont * 1.25 = (Amps)	13.83	13.83
	30 deg C ampacity =	40	40
2.b	Icont= (Amps)	11.06	11.06
	Start ampacity	40	40
	Temp. derate (%=F)	0.76	0.76
	Cndt. fill derate (%=#)	0.8	0.8
	Derated ampacity	24.32	24.32
		Term 1	Term 2
	Temp table	75degC	75degC
2.c	Icont*1.25= (Amps)	13.83	13.83
	Ampacity	35	35
2.d	EGC	C AWG 10	C AWG 10 Art. 250.122
	OCP size =	15	15

Inverter Type A Output

Power-One PVI-3.6-S — 1-way wire length: 15 ft
Icont= 16.00 A — Art 690.8(A)(1)

3.a	Icont *1.25 = (Amps)	20.00 A	Art 690.8(B)(1)
	OCP size =	20 A	Art. 240.6(A)
3.b	Conductor C AWG 10	THWN-2 at 90 deg C: Table 310.15(B)(16)	
	Icont * 1.25 = (Amps)	20.00	
	30 deg C ampacity =	40	
3.c	Icont= (Amps)	16.00	
	Start ampacity	40	
	Temperature derate (%=F)	0.91	
	Conduit fill derate (%=#)	1	
	Derated ampacity	36.4	
3.d	Icont*1.25= (Amps)	20.00	
	Ampacity	35	
3.e	EGC/GEC =	D AWG 08	Art. 690.47(C)(3), 250.166(B)

Combined Inverter Output

Service Voltage= 240 Volts
Total Inverter Power= 4,000 Nameplate Watts — 1-way wire length: 0 ft

	Icont = # of inverters*max inverter current		Art 690.8(A)(1)
	Icont = (Amps)	16.00	
4.a	Icont *1.25 = (Amps)	20.00 A	Art 690.8(B)(1)
	OCP size =	20 A	Art. 240.6(A)
4.b	Conductor E AWG 06	THWN-2 at 90 deg C: Table 310.15(B)(16)	
	Icont * 1.25 = (Amps)	20.00	
	30 deg C ampacity =	75	
4.c	Icont= (Amps)	16.00	
	Start ampacity	75	
	Temp. derate (%=F)	0.91	
	Cndt. fill derate (%=#)	1	
	Derated ampacity	68.25	
4.d	Icont*1.25= (Amps)	20.00	
	Ampacity	65	

CONFIDENTIAL – THE INFORMATION HEREIN CONTAINED SHALL NOT BE USED FOR THE BENEFIT OF ANYONE EXCEPT SOLARCITY INC., NOR SHALL IT BE DISCLOSED IN WHOLE OR IN PART TO OTHERS OUTSIDE THE RECIPIENT'S ORGANIZATION, EXCEPT IN CONNECTION WITH THE SALE AND USE OF THE RESPECTIVE SOLARCITY EQUIPMENT, WITHOUT THE WRITTEN PERMISSION OF SOLARCITY INC.

JOB NUMBER: JB-9721539 00
MARKET: NH
MODULES: (18) TRINA SOLAR # TSM-250PA05.18
PROJECT MANAGER:
MOUNTING SYSTEM: 6" SOLARCITY SLEEKPOST (FASTJACK)
PAYMENT TYPE: PPA
INVERTER: (1) POWER-ONE # AURORA PVI-3.6-OUTD-S-US

PREMISE OWNER: SCHLANSKY, BARRY AND NEBORSKY, REBECCA
2049 SE MAIN
PORTLAND, OR 97214
AHJ: Portland

DESCRIPTION: RESIDENCE
4.5KW ROOF MOUNT PV SYSTEM

PAGE NAME: ELECTRICAL CALCULATIONS

DESIGN: N. NISCHAL
SHEET: PV 6 REV: DATE: 8/29/2013

SolarCity
3055 Clearview Way San Mateo, CA 94402
T:(650) 638-1028 F:(650) 638-1029
(888)-SOL-CITY (765-2489) www.solarcity.com

CAUTION

POWER TO THIS BUILDING IS ALSO SUPPLIED FROM THE FOLLOWING SOURCES WITH DISCONNECTS LOCATED AS SHOWN:

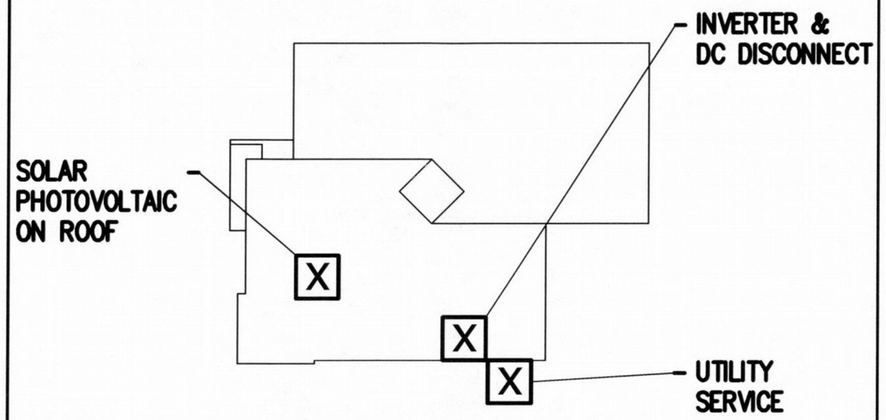

PHOTOVOLTAIC BACK-FED CIRCUIT BREAKER IN MAIN ELECTRICAL PANEL IS A/C DISCONNECT PER NEC 690.17

- OPERATING VOLTAGE = 240V MAX CURRENT = 16.0 A

City of Portland
REVIEWED FOR CODE COMPLIANCE
DEC 03 2013
Permit Number

CONFIDENTIAL – THE INFORMATION HEREIN CONTAINED SHALL NOT BE USED FOR THE BENEFIT OF ANYONE EXCEPT SOLARCITY INC., NOR SHALL IT BE DISCLOSED IN WHOLE OR IN PART TO OTHERS OUTSIDE THE RECIPIENT'S ORGANIZATION, EXCEPT IN CONNECTION WITH THE SALE AND USE OF THE RESPECTIVE SOLARCITY EQUIPMENT, WITHOUT THE WRITTEN PERMISSION OF SOLARCITY INC.

JOB NUMBER: JB-9721539 00	
MARKET: NH	MODULES: (18) TRINA SOLAR # TSM-250PA05.18
PROJECT MANAGER:	MOUNTING SYSTEM: 6" SOLARCITY SLEEKPOST (FASTJACK)
PAYMENT TYPE: PPA	INVERTER: (1) POWER-ONE # AURORA PVI-3.6-OUTD-S-US

PREMISE OWNER: AHJ: Portland
SCHLANSKY, BARRY AND NEBORSKY, REBECCA
2049 SE MAIN
PORTLAND, OR 97214

DESCRIPTION:
RESIDENCE
4.5KW ROOF MOUNT PV SYSTEM

PAGE NAME:
SITE PLAN PLACARD

DESIGN: N. NISCHAL

SHEET: PV 7 REV: DATE: 8/29/2013

SolarCity
3055 Clearview Way San Mateo, CA 94402
T:(650) 638-1028 F:(650) 638-1029
(888)-SOL-CITY (765-2489) www.solarcity.com

CAUTION: SOLAR CIRCUIT

Label Location:
(C)
Per Code:
CA Fire Guidelines

PHOTOVOLTAIC DC DISCONNECT

Label Location:
(DC) (INV)
Per Code:
NEC 690.14.C.2

MAXIMUM POWER-POINT CURRENT (Imp) A
MAXIMUM POWER-POINT VOLTAGE (Vmp) V
MAXIMUM SYSTEM VOLTAGE (Voc) V
SHORT-CIRCUIT CURRENT (Isc) A

Label Location:
(DC) (INV)
Per Code:
NEC 690.53

WARNING
ELECTRICAL SHOCK HAZARD
DO NOT TOUCH TERMINALS
TERMINALS ON BOTH LINE AND LOAD SIDES MAY BE ENERGIZED IN THE OPEN POSITION
DC VOLTAGE IS ALWAYS PRESENT WHEN SOLAR MODULES ARE EXPOSED TO SUNLIGHT

Label Location:
(DC) (CB)
Per Code:
NEC 690.17(4)

WARNING
ELECTRIC SHOCK HAZARD
IF A GROUND FAULT IS INDICATED
NORMALLY GROUNDED CONDUCTORS MAY BE UNGROUNDED AND ENERGIZED

Label Location:
(DC) (INV)
Per Code:
NEC 690.5(C)

PHOTOVOLTAIC AC DISCONNECT

Label Location:
(AC) (POI)
Per Code:
NEC 690.14.C.2

MAXIMUM AC OPERATING CURRENT A
MAXIMUM AC OPERATING VOLTAGE V

Label Location:
(AC) (POI)
Per Code:
NEC 690.54

PV SYSTEM DISCONNECT FOR UTILITY OPERATION

Label Location:
(AC) (POI)

WARNING
ELECTRIC SHOCK HAZARD
DO NOT TOUCH TERMINALS
TERMINALS ON BOTH LINE AND LOAD SIDES MAY BE ENERGIZED IN THE OPEN POSITION

Label Location:
(AC) (POI)
Per Code:
NEC 690.17(4)

WARNING
INVERTER OUTPUT CONNECTION
DO NOT RELOCATE THIS OVERCURRENT DEVICE

Label Location:
(POI)
Per Code:
NEC 690.64.B.7

PHOTOVOLTAIC POINT OF INTERCONNECTION
WARNING: ELECTRIC SHOCK HAZARD. DO NOT TOUCH TERMINALS. TERMINALS ON BOTH THE LINE AND LOAD SIDE MAY BE ENERGIZED IN THE OPEN POSITION. FOR SERVICE DE-ENERGIZE BOTH SOURCE AND MAIN BREAKER.
PV POWER SOURCE
MAXIMUM AC OPERATING CURRENT A
MAXIMUM AC OPERATING VOLTAGE V

Label Location:
(POI)
Per Code:
NEC 690.17.4; NEC 690.54

CAUTION
PHOTOVOLTAIC SYSTEM CIRCUIT IS BACKFED

Label Location:
(D) (POI)
Per Code:
NEC 690.64.B.4

CAUTION
DUAL POWER SOURCE
SECOND SOURCE IS PHOTOVOLTAIC SYSTEM

Label Location:
(POI)
Per Code:
NEC 690.64.B.4

WARNING
ELECTRIC SHOCK HAZARD
THE DC CONDUCTORS OF THIS PHOTOVOLTAIC SYSTEM ARE UNGROUNDED AND MAY BE ENERGIZED

Label Location:
(DC) (INV)
Per Code:
NEC 690.35(F)
TO BE USED WHEN INVERTER IS UNGROUNDED

City of Portland
REVIEWED FOR CODE COMPLIANCE
DEC 03 2013
Permit Number

(AC): AC Disconnect
(C): Conduit
(CB): Combiner Box
(D): Distribution Panel
(DC): DC Disconnect
(IC): Interior Run Conduit
(INV): Inverter With Integrated DC Disconnect
(LC): Load Center
(M): Utility Meter
(POI): Point of Interconnection

CONFIDENTIAL – THE INFORMATION HEREIN CONTAINED SHALL NOT BE USED FOR THE BENEFIT OF ANYONE EXCEPT SOLARCITY INC., NOR SHALL IT BE DISCLOSED IN WHOLE OR IN PART TO OTHERS OUTSIDE THE RECIPIENT'S ORGANIZATION, EXCEPT IN CONNECTION WITH THE SALE AND USE OF THE RESPECTIVE SOLARCITY EQUIPMENT, WITHOUT THE WRITTEN PERMISSION OF SOLARCITY INC.

SC - OR Label Set

SolarCity
3055 Cleaview Way
San Mateo, CA 94402
T:(650) 638-1028 F:(650) 638-1029
(888)-SOL-CITY (765-2489) www.solarcity.com

power-one®
Renewable Energy Solutions

AURORA®

AURORA UNO

PVI-3.0-TL
PVI-3.6-TL
PVI-4.2-TL

GENERAL SPECIFICATIONS
OUTDOOR MODELS

The most common residential inverter is the ideal size for an average-sized family home. This family of single-phase string inverter complements the typical number of rooftop solar panels, allowing home-owners to get the most efficient energy harvesting for the size of the property. This rugged outdoor inverter has been designed as a completely sealed unit to withstand the harshest environmental conditions.

One of the key benefits of the Uno family of single-phase inverters is the dual input section to process two strings with independent MPPT especially useful for rooftop installations with two different orientations (ie East and West). The high speed MPPT offers real-time power tracking and improved energy harvesting.

The transformerless operation gives the highest efficiency of up to 97.0%. The wide input voltage range makes the inverter suitable to low power installations with reduced string size.

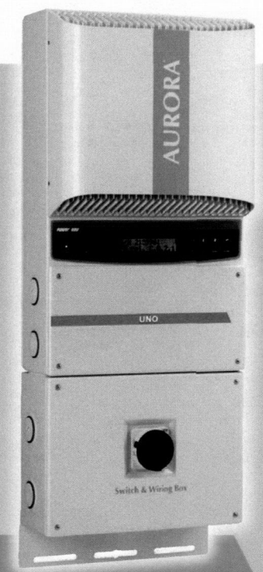

Features

- Each inverter is set on specific grid codes which can be selected in the field
- Single phase output
- Dual input sections with independent MPPT, allows optimal energy harvesting from two sub-arrays oriented in different directions
- Wide input range
- High speed and precise MPPT algorithm for real time power tracking and improved energy harvesting
- Flat efficiency curves ensure high efficiency at all output levels ensuring consistent and stable performance across the entire input voltage and output power range
- Outdoor enclosure for unrestricted use under any environmental conditions
- Integrated DC disconnect switch in compliance with international Standards (-S Version)
- RS-485 communication interface (for connection to laptop or datalogger)
- Compatible with PVI-RADIOMODULE for wireless communication with Aurora PVI-DESKTOP

City of Portland
REVIEWED FOR CODE COMPLIANCE
DEC 03 2013
Permit Number

TECHNICAL DATA	VALUES	PVI-3.0-OUTD-US			PVI-3.6-OUTD-US			PVI-4.2-OUTD-US		
Nominal Output Power	W		3000			3600			4200	
Maximum Output Power	W	3000	3300**	3300**	3600	4000**	4000**	4200	4600**	4600**
Rated Grid AC Voltage	V	208	240	277	208	240	277	208	240	277
Input Side (DC)										
Number of Independent MPPT Channels			2			2			2	
Maximum Usable Power for Each Channel	W		2000			3000			3000	
Absolute Maximum Voltage (Vmax)	V		600			600			600	
Start-Up Voltage (Vstart)	V		200 (adj. 120-350)			200 (adj. 120-350)			200 (adj. 120-350)	
Full Power MPPT Voltage Range	V		160-530			120-530			140-530	
Operating MPPT Voltage Range	V		0.7xVstart-580			0.7xVstart-580			0.7xVstart-580	
Maximum Current (Idcmax) for both MPPT in Parallel	A		20			32			32	
Maximum Usable Current per Channel	A		10			16			16	
Maximum Short Circuit Current Limit per Channel	A		12.5			20			20	
Number of Wire Landing Terminals Per Channel			2 Pairs (1 on -S version)			2 Pairs (1 on -S version)			2 Pairs (1 on -S version)	
Array Wiring Termination			Terminal block, Pressure Clamp, AWG10-AWG4							
Output Side (AC)										
Grid Connection Type		1Ø/2W	Split-Ø/3W	1Ø/2W	1Ø/2W	Split-Ø/3W	1Ø/2W	1Ø/2W	Split-Ø/3W	1Ø/2W
Adjustable Voltage Range (Vmin-Vmax)	V	183-228	211-264	244-304	183-228	211-264	244-304	183-228	211-264	244-304
Grid Frequency	Hz		60			60			60	
Adjustable Grid Frequency Range	Hz		57-60.5			57-60.5			57-60.5	
Maximum Current (Iacmax)	A_{RMS}	14.5	14.5	12	17.2	16	16	20	20	20
Power Factor			> 0.995			> 0.995			> 0.995	
Total Harmonic Distortion At Rated Power	%		< 2			< 2			< 2	
Grid Wiring Termination Type			Terminal block, Pressure Clamp, AWG10-AWG4							
Protection Devices										
Input										
Reverse Polarity Protection			Yes			Yes			Yes	
Over-Voltage Protection Type			Varistor, 2 for each channel			Varistor, 2 for each channel			Varistor, 2 for each channel	
PV Array Ground Fault Detection			Pre start-up Riso and dynamic GFDI (Requires Floating Arrays)							
Output										
Anti-Islanding Protection			Meets UL 1741/IEE1547 requirements			Meets UL 1741/IEE1547 requirements			Meets UL 1741/IEE1547 requirements	
Over-Voltage Protection Type			Varistor, 2 (L_1 - L_2 / L_1 - G)			Varistor, 2 (L_1 - L_2 / L_1 - G)			Varistor, 2 (L_1 - L_2 / L_1 - G)	
Maximum AC OCPD Rating	A	20	20	15	25	20	20	25	25	25
Efficiency										
Maximum Efficiency	%		96.9			97			97	
CEC Efficiency	%		96			96			96	
Operating Performance										
Stand-by Consumption	W_{RMS}		< 8			< 8			< 8	
Night time consumption	W_{RMS}		< 0.6			< 0.6			< 0.6	
Communication										
User-Interface			16 characters x 2 lines LCD display							
Remote Monitoring (1xRS485 incl.)			AURORA-UNIVERSAL (opt.)							
Wired Local Monitoring (1xRS485 incl.)			PVI-USB-RS485_232 (opt.), PVI-DESKTOP (opt.)							
Wireless Local Monitoring			PVI-DESKTOP (opt.) with PVI-RADIOMODULE (opt.)							
Environmental										
Ambient Air Operating Temperature Range	°F (°C)		-13 to +140 (-25 to +60) with derating above 131 (55)			-13 to +140 (-25 to +60) with derating above 131 (55)			-13 to +140 (-25 to +60) with derating above 113 (45)	
Ambient Air Storage Temperature Range	°F (°C)		-40 to 176 (-40 to +80)			-40 to 176 (-40 to +80)			-40 to 176 (-40 to +80)	
Relative Humidity	% RH		0-100 condensing			0-100 condensing			0-100 condensing	
Acoustic Noise Emission Level	db (A) @1m		< 50			< 50			< 50	
Maximum Operating Altitude without Derating	ft(m)		6560 (2000)			6560 (2000)			6560 (2000)	
Mechanical Specifications										
Enclosure rating			NEMA 4X			NEMA 4X			NEMA 4X	
Cooling			Natural Convection			Natural Convection			Natural Convection	
Dimensions (H x W x D)	in (mm)		33.8 x 12.8 x 8.7 (859 x 325 x 222) -S Version							
Weight	lb/(kg)		< 47.3 (21.3) -S version			< 47.3 (21.3) -S version			< 47.3 (21.3) -S version	
Mounting System			Wall bracket			Wall bracket			Wall bracket	
Conduit Connections* **			Trade size KOs: (2ea x 1/2") and (2ea x 1-1/4", 3 places side, front, rear)			Trade size KOs: (2ea x 1/2") and (2ea x 1-1/4", 3 places side, front, rear)			Trade size KOs: (2ea x 1/2") and (2ea x 1-1/4", 3 places side, front, rear)	
DC Switch Rating (Per Contact)	A/V		25 / 600			25 / 600			25 / 600	
Safety										
Isolation Level			Transformerless (Floating Array)			Transformerless (Floating Array)			Transformerless (Floating Array)	
Safety and EMC Standard			UL 1741, CSA - C22.2 N. 107.1-01			UL 1741, CSA - C22.2 N. 107.1-01			UL 1741, CSA - C22.2 N. 107.1-01	
Safety Approval			$_cCSA_{us}$			$_cCSA_{us}$			$_cCSA_{us}$	
Warranty										
Standard Warranty	years		10			10			10	
Extended Warranty	years		15 & 20			15 & 20			15 & 20	
Available Models										
Standard - Without DC Switch and Wiring Box			PVI-3.0-OUTD-US			PVI-3.6-OUTD-US			PVI-4.2-OUTD-US	
With DC Switch and Wiring Box			PVI-3.0-OUTD-S-US			PVI-3.6-OUTD-S-US			PVI-4.2-OUTD-S-US	

*All data is subject to change without notice

** Capability enabled at nominal AC voltage and with sufficient DC power available

*** When equipped with optional DC Switch and Wiring Box

CSA INTERNATIONAL

Certificate of Compliance

Certificate: 2096477 **Master Contract:** 173688

Project: 2439385 **Date Issued:** July 19, 2011

Issued to: **Power-One, Inc**

740 Calle Plano
Camarillo, CA 93012
USA
Attention: Robert White

The products listed below are eligible to bear the CSA Mark shown with adjacent indicators 'C' and 'US' for Canada and US or with adjacent indicator 'US' for US only or without either indicator for Canada only.

C US

Rob Hempstock

Issued by: Rob Hempstock, AScT.

PRODUCTS

CLASS 5311 09 - POWER SUPPLIES - Distributed Generation Power Systems Equipment
CLASS 5311 89 - POWER SUPPLIES - Distributed Generation - Power Systems Equipment
- Certified to U.S. Standards

Utility Interactive Inverter, Models PVI-4.2-OUTD-US, PVI-3.6-OUTD-US, PVI-3.0-OUTD-US, PVI-4.2-OUTD-S-US, PVI-3.6-OUTD-S-US, PVI-3.0-OUTD-S-US, PVI-4.2-OUTD-US-W, PVI-3.6-OUTD-US-W and PVI-3.0-OUTD-US-W; provided with two DC input channels, permanently connected.

For details related to ratings, reference should be made to the CSA Certification Record, Appendix 1 or the Descriptive Report.

APPLICABLE REQUIREMENTS

CSA-C22.2 No.107.1-01 - General Use Power Supplies

UL Std No. 1741-Second Edition - Inverters, Converters, Controllers and Interconnection System Equipment for Use With Distributed Energy Resources (January 28, 2010)

City of Portland
REVIEWED FOR CODE COMPLIANCE
DEC 03 2013
Permit Number

SolarCity SleekMount™ – Post Standoff

The SolarCity SleekMount hardware solution is optimized to achieve superior strength and aesthetics while minimizing roof disruption and labor. The elimination of visible rail ends and mounting clamps, combined with the addition of array trim and a lower profile all contribute to a more visually appealing system. SleekMount utilizes Zep Compatible modules with strengthened frames that attach directly to Zep Solar standoffs, effectively reducing the number of standoffs required, when compared to conventional rail-based systems.

- Zep Solar hardware and UL 1703 listed Zep Compatible modules
- Interlock and ground devices in system UL listed to UL 2703
- Interlock and Ground Zep ETL listed to UL 1703 as "Grounding and Bonding System"
- No shingle cutting required
- Ground Zep UL and ETL listed to UL 467 as grounding device
- Anodized components for corrosion resistance
- Applicable for vent spanning functions

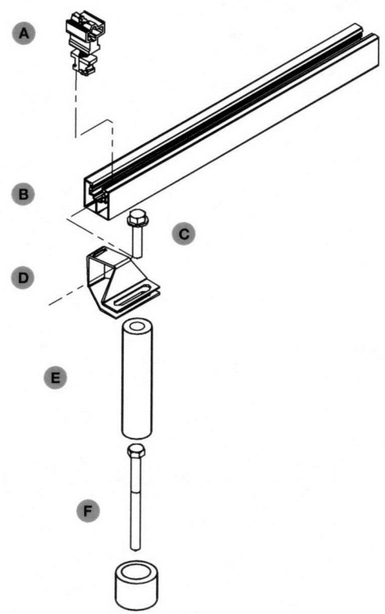

Components

- A Cam Foot
- B Spanner Bar
- C 3/8 Machine screw
- D Spanner Bar Clamp
- E Prosolar Commercial FastJack E-Series
- F 5/16 Lag

Installation Instructions

1. Remove Tile and locate rafter
2. Drill pilot hole
3. Seal pilot hole
4. Place FastJack
5. Install Lag
6. Install Flashing (see standoff detail on planset)
7. Re-install tile
8. Secure leveling foot to Prosolar post using machine screw
9. Place module

SolarCity August 2012

City of Portland
REVIEWED FOR CODE COMPLIANCE
DEC 03 2013
Permit Number

Mono Multi Solutions

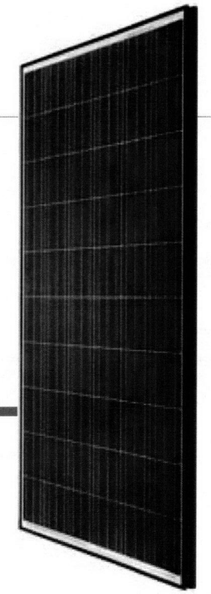

TSM-PA05.18

THE TRINAMOUNT MODULE

60 CELL
MULTICRYSTALLINE MODULE WITH TRINAMOUNT FRAME

240-260W
POWER OUTPUT RANGE

15.9%
MAXIMUM EFFICIENCY

0~+3%
POWER OUTPUT GUARANTEE

As a leading global manufacturer of next generation photovoltaic products, we believe close cooperation with our partners is critical to success. With local presence around the globe, Trina is able to provide exceptional service to each customer in each market and supplement our innovative, reliable products with the backing of Trina as a strong, bankable partner. We are committed to building strategic, mutually beneficial collaboration with installers, developers, distributors and other partners as the backbone of our shared success in driving Smart Energy Together.

Trina Solar Limited
www.trinasolar.com

Trinasolar
Smart Energy Together

Our most versitile product
- Compatible with all major BOS components and system designs

One of the industry's most trusted modules
- Over 2 GW sold across all major global markets
- Field proven performance

Highly reliable due to stringent quality control
- Over 30 in-house tests (UV, TC, HF, and many more)
- In-house testing goes well beyong certification requirements

Certified to withstand challenging environmental conditions
- 130 km/hr wind load (2400 Pa)
- 900 kg snow load per module (5400 Pa)

LINEAR PERFORMANCE WARRANTY

10 Year Product Warranty • 25 Year Linear Power Warranty

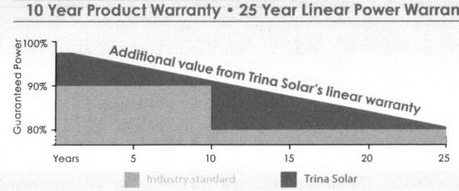

TSM-PA05.18 TRINAMOUNT II WITH THE UNIVERSAL MODULE

DIMENSIONS OF PV MODULE TSM-PA05.18

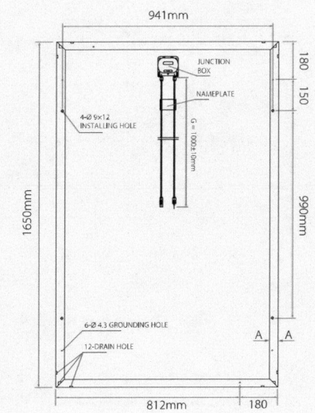

Back View

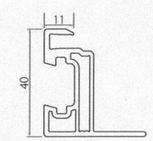

I-V CURVES OF PV MODULE TSM-245 PA05.18

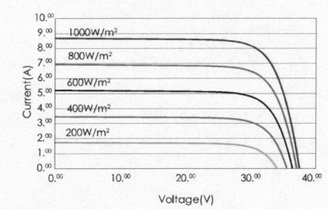

ELECTRICAL DATA @ STC	TSM-240 PA05.18	TSM-245 PA05.18	TSM-250 PA05.18	TSM-255 PA05.18	TSM-260 PA05.18
Peak Power Watts-P_{MAX} (Wp)	240	245	250	255	260
Power Output Tolerance-P_{MAX} (%)	0/+3	0/+3	0/+3	0/+3	0/+3
Maximum Power Voltage-V_{MP} (V)	29.7	30.2	30.3	30.5	30.7
Maximum Power Current-I_{MPP} (A)	8.10	8.13	8.27	8.36	8.47
Open Circuit Voltage-V_{OC} (V)	37.3	37.5	37.6	37.7	37.9
Short Circuit Current-I_{SC} (A)	8.62	8.68	8.85	8.92	9.00
Module Efficiency η_m (%)	14.7	15.0	15.3	15.6	15.9

STC: Irradiance 1000 W/m², Cell Temperature 25°C, Air Mass AM1.5 according to EN 60904-3.
Average efficiency reduction of 4.5% at 200 W/m² according to EN 60904-1.

City of Portland
REVIEWED FOR CODE COMPLIANCE
DEC 13 2013
Permit Number

ELECTRICAL DATA @ NOCT	TSM-240 PA05.18	TSM-245 PA05.18	TSM-250 PA05.18	TSM-255 PA05.18	TSM-260 PA05.18
Maximum Power-P_{MAX} (Wp)	174	178	181	184	188
Maximum Power Voltage-V_{MP} (V)	26.6	26.8	27.0	27.2	27.4
Maximum Power Current-I_{MPP} (A)	6.55	6.64	6.70	6.77	6.86
Open Circuit Voltage (V)-V_{OC} (V)	34.1	34.2	34.3	34.4	34.6
Short Circuit Current (A)-I_{SC} (A)	7.04	7.10	7.25	7.31	7.37

NOCT: Irradiance at 800 W/m², Ambient Temperature 20°C, Wind Speed 1 m/s.

MECHANICAL DATA	
Solar cells	Multicrystalline 156 × 156 mm (6 inches)
Cell orientation	60 cells (6 × 10)
Module dimensions	1650 × 992 × 40 mm (64.95 × 39.05 × 1.57 inches)
Weight	18.6 kg (41.0 lbs)
Glass	High transparency solar glass 3.2 mm (0.13 inches)
Backsheet	White
Frame	Black Anodized Aluminium Alloy with Trinamount Groove
J-Box	IP 65 or IP 67 rated
Cables	Photovoltaic Technology cable 4.0 mm² (0.006 inches²), 1100 mm (43.3 inches)
Connector	Original MC4

TEMPERATURE RATINGS	
Nominal Operating Cell Temperature (NOCT)	45°C (±2°C)
Temperature Coefficient of P_{MAX}	- 0.43%/°C
Temperature Coefficient of V_{OC}	- 0.32%/°C
Temperature Coefficient of I_{SC}	0.047%/°C

MAXIMUM RATINGS	
Operational Temperature	-40~+85°C
Maximum System Voltage	1000V DC(IEC)/ 600V DC(UL)
Max Series Fuse Rating	15A

WARRANTY

10 year Product Workmanship Warranty
25 year Linear Power Warranty
(Please refer to product warranty for details)

PACKAGING CONFIGURATION

Modules per box: 24 pieces
Modules per 40' container: 672 pieces

CERTIFICATION

TSM_US_June_2013_Rev B

Trinasolar
Smart Energy Together

CAUTION: READ SAFETY AND INSTALLATION INSTRUCTIONS BEFORE USING THE PRODUCT.
© 2013 Trina Solar Limited. All rights reserved. Specifications included in this datasheet are subject to change without notice.