CHILDRESS

1701 N. Collins Blvd
Suite 3000
Richardson, Tx 75080
214.651.6630 P
214.651.6631 F

2

WALMART STORE #5899

Portland, OR

PREPARED FOR:

Duo-Gard

Canton, Michigan

Translucent Canopy Calculations

January 18, 2013

REFERENCES:

ALUMINUM DESIGN MANUAL, EIGHTH EDITION
JANUARY 2005
THE ALUMINUM ASSOCIATION

STEEL CONSTRUCTION MANUAL
AMERICAN INSTITUTE OF STEEL CONSTRUCTION

NOTICE:

All information included in the calculations shall be incorporated into the shop drawings. For discrepancies between calculations and shop drawings, the calculations will control.

Calculations meet current code of 2006 International Building Code which references ASCE 7-05. Calculations reference ASCE 7-02 but the loads are the same as ASCE 7-05.

REGISTERED PROFESSIONAL ENGINEER
79530PE
OREGON
JUNE 17, 2008
TONY H. CHILDRESS

1-18-13

EXPIRES: (or)

12-112261 DFS 06 CO

☑ Reviewed ☐ Revise & Resubmit

☐ Furnish as Corrected ☐ Rejected

Corrections or comments made on the shop drawings during this review do not relieve contractor from compliance with requirements of the drawings and specifications. This is only for review of the general conformance with the design concept of the project and general compliance with the information given in the contract documents. The contractor is responsible for: Confirming and correlating all quantities and dimensions; selecting fabrication processes and techniques of construction: coordinating his or her work with that of all other trades and performing all work in a safe and satisfactory manner.

B&B ASSOCIATES, INC.

Date: 10/17/2013

By: S.Q

Design Loads

Aldo F. Colandrea, Ph.D., P.E.
13710 Reeck Rd., Southgate MI, 48195
734-324-2924W, 734-735-3915C

Dead Load

D = 4 psf for light aluminum framing

Live Load

L = 20 psf — ASCE7-05, Table 4-1

Snow Load

pg =	35	psf for		Limiting Case
I =	1.0			ASCE7-05, Table 7-4
Ce =	1.0	Exposure	C	ASCE7-05, Table 7-2
Roof Slope =	9.5	degrees		2 in 12 slope
Ct	1.2	for	cold roof	ASCE7-05, Table 7-3
Cs =	1.0	Unobstructed slippery surface		ASCE7-05, Figure 7-2
p =0.7 * Ce * Cs * Ct * I * pg =	29.4	psf	balanced snow	ASCE7-05, Eq. 7-1

Drift Load (Y or N)?	Y			windward drift
Length of existing building =	200	ft		
Density of snow =	18.6	pcf		ASCE7-05, Eqn 7-4
Height of drift load (hd) =	2.38	ft (reduced by 25% per 7.7.1)		ASCE7-05, Figure 7-9
Maximum snow load	73.6	psf		ASCE7-05, Section 7.7.1
Length of Drift	9.5	ft		ASCE7-05, Section 7.7.1
Bay length =	74.0	in		
Snow load at first support	64.2	psf	nearest wall	linear interpolation
Snow load at 2nd support	49.8	psf	3'-1" away	
Snow load at far support	35.4	psf	6'-2" away	

Wind Load

wind speed =	90	mph for 0	Job specification
Iw =	1.00	for Category II structures	ASCE7-05, Table 6-1
Kz =	0.85		ASCE7-05, Table 6-2
Kd =	0.85		ASCE7-05, Table 6-4
qz =	15.0	psf	ASCE7-05, Eq. 6-15
G =	0.85		ASCE7-05, Section 6.5.8.1
Cn =	-1.50	for gam = 0, angle= 10 deg and clear wind flow	ASCE7-05, Figure 6-18A
GCp (C&C) =	-2.50	for eff area > 9 sq ft.	ASCE7-05, Figure 6-19A

Then q = qz*G*Cn = -19.1 psf for the windward roof — ASCE7-05, Eq. 6-25

Load Combinations for Roof — ASCE 7-05, Section 2.4.1

D	=	4.0	psf	D+ 0.75(S+W)	=	27.0	psf
D+L	=	24.0	psf	D+ 0.75*(L+W)	=	4.7	psf
D+S	=	53.8	psf				
D+W	=	-15.1	psf	Roof Design Load =		53.8	psf from D+S

Roof Analysis

Aldo F. Colandrea, Ph.D., P.E.
13710 Reeck Rd., Southgate MI, 48195
734-324-2924W, 734-735-3915C

Job	Walmart Canopy - 35 psf snow		
Page	3	Date	9/9/11

Properties

Material	6061-t6	
Fcy =	35000	psi
ny =	1.65	
No of Purlins =	0	
Ridge Beam (Y/N)? =	N	
Roof Design Load =	53.8	psf

(from loading page)

Total Roof Span (front to back)
L = 74 in

Largest Bay width
width = 37 in

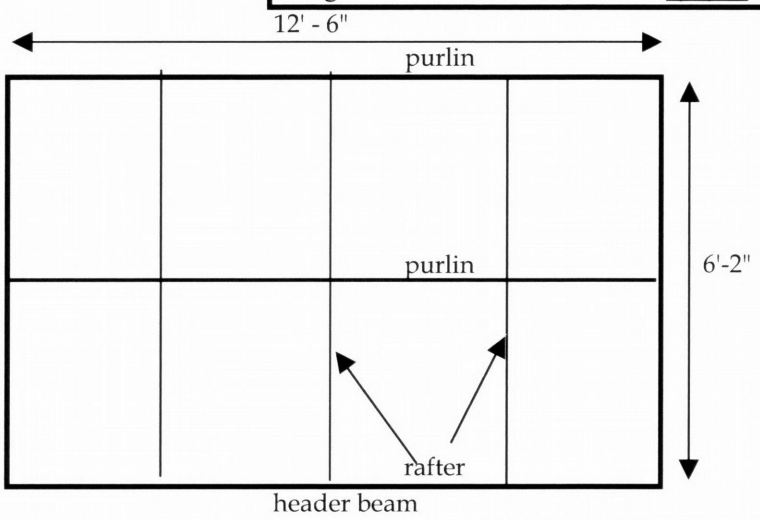

Roof Plan

Rafter Analysis (1st bay - worst case)

Rafter spacing =	37.0	in	
Span =	37.0	in	
tributary load w =	188.1	lbs/ft	
Mmax =	2682	lb-in	
Fb = Fcy/ny =	21212	psi	
Mallow = Fb * Sc =	7957	lb-in	Acceptable
Purlin reaction =	289.9	lbs	

	b	h	t
rafter	BPC Section only		
I bm =	0.305	in^4	
S bm =	0.375	in^3	

(See page 7 for properties)

Deflection Check

Actual deflection =	0.051	in	
Allow deflection =	0.617	in	Acceptable

Purlin Analysis (Consider middle purlin which is worst case & purlin is hinged/fixed.)

Concentrated load P =	511.5	lbs	
Span =	134.0	in	
Mmax =	22825	lb-in	
Fb = Fcy/ny =	21212	psi	
Mallow = Fb * Sc =	36545	lb-in	Acceptable
Reaction =	767.3	lbs	

	b	h	t
Purlin	2.5	4.0	0.125
I bm =	3.446	in^4	
S bm =	1.723	in^3	

Deflection Analysis

Actual deflection =	0.739	in	
Allowable deflection =	1.117	in	Acceptable

Polycarbonate Roof Check

Aldo F. Colandrea, Ph.D., P.E.
13710 Reeck Rd., Southgate MI
734-324-2924W, 734-735-3915C

Properties

From Gallina Specs the material properties are:

Tensile modulus (E) =	375000	psi	ASTM D-638, Average Value
Flexural Yield Strength	13300	psi	and on flexural yield strength.
snow load =	49.8	psf	from loading page
D+S =	50.8	psf	only 1 psf for polycarbonate
Roof Design Load =	0.35	psi	

16 mm polycarbonate section check. (Treat as plate simply supported)

length (a) =	36.0	in	
width (b) =	37.0	in	
alpha = b/a =	1.028		
I =	0.0076	in^4/in	See next page
D = EI =	2851.9	lb-in^2	
Moment = 0.0479qa^2 =	21.90	lb-in/in	Timoshenko, "Plates & Shells", Table 8
S =	0.0155	in^3/in	See next page
stress = M/S =	1417	psi	Acceptable

Deflection check

d act =0.00406qa^4/D =	0.84	in	Timoshenko, "Plates & Shells", Table 8
70% * dact =	0.59	in	use 70% for C&C loading
d allow =	1.00	in	Acceptable

Polycarbonate Roof Section

Aldo F. Colandrea, Ph.D., P.E.
13710 Reeck Rd., Southgate MI
734-324-2924W, 734-735-3915C

Cross Section of 16 mm RDC panel:

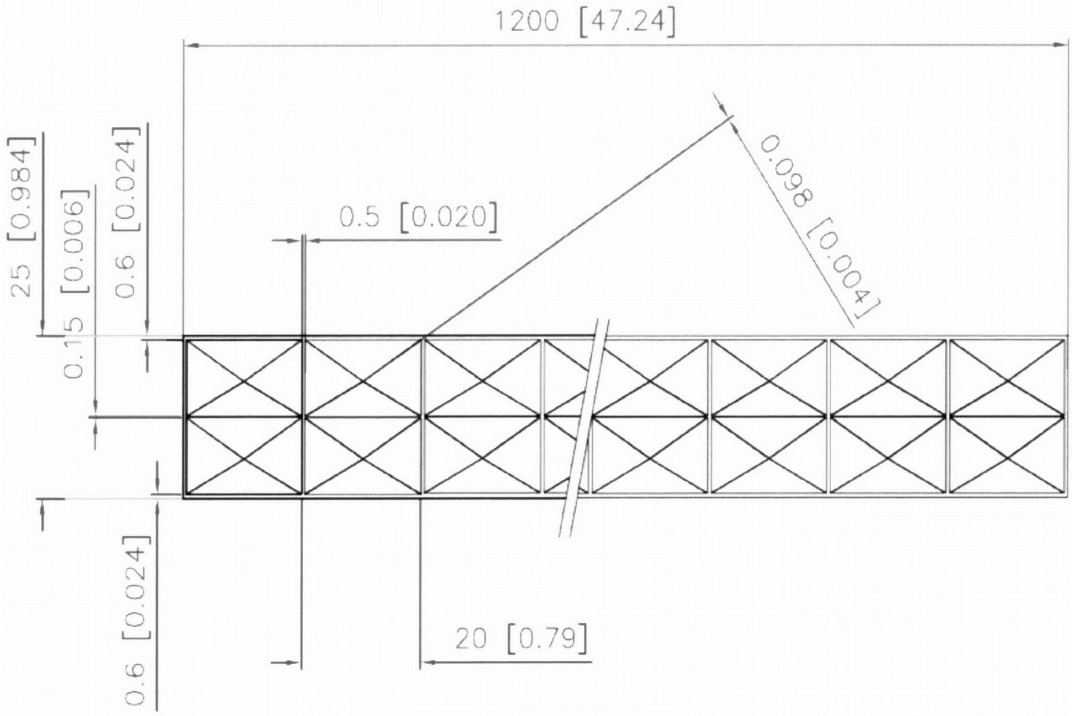

diagonal angle = 34.8 degrees or 0.559 radians

For the 25 mm panel

	b	h	A	y	Ay	d	Io	Ad^2
top sheet	47.24	0.024	1.13	0.97	1.10	0.48	0.00	0.26
top diags			0.19	0.74	0.14	0.25	0.00	0.01
verticals	1.22	0.936	1.14	0.49	0.56	0.00	0.08	0.00
middle pl	47.24	0.006	0.28	0.49	0.14	0.00	0.00	0.00
bott diags			0.19	0.25	0.05	-0.25	0.00	0.01
bottom sht	47.24	0.024	1.13	0.01	0.01	-0.48	0.00	0.26
Totals			4.07		2.00		0.08	0.55

	ybar =	0.4920 in	depth =	0.984 in
	I tot =	0.6287 in^4	Sbot =	1.278 in^3
			Stop =	1.278 in^3
per inch	ybar =	0.4920 in	depth =	0.9840 in
	I tot =	0.0076 in^4	Sbot =	0.0155 in^3
			Stop =	0.0155 in^3

Connections Check

Aldo F. Colandrea, Ph.D., P.E.
13710 Reeck Rd., Southgate MI, 48195
734-324-2924W, 734-735-3915C

The worst case connection loads from the low load cases are considered here.

Design Load for uplift = -15.1 psf
(This is from the loadings page considering D+W)

Rafter Connection to Purlin Check

Tributary area for load =	9.5	ft^2	For 37" x 37" area
Reaction load =	-143	lbs	uplift
Capacity of #12-14 Tek Screw =	933	lbs	See Attachment #2 FOS =3 for tension
For 2 screws =	1867	lbs	

Acceptable

Purlin Connection to External Supports

TEK Screw Check

Tributary area for load =	38.50	ft^2	For 12.5' long bay x 6.16 ft width
Reaction load =	-580	lbs	
Capacity of #12-14 Tek Screw =	933	lbs	
For 2 screws =	1867	lbs	

Acceptable

Angle check (At interior supports two angles are used.)

Reaction load =	-1161	lbs	
At each angle 50% of load =	-580	lbs	at supports
Moment in angle =	580	lb-in	
Sx =	0.0417	in^3	
fb =	13931	psi	
Fb = 1.3Fcy/ny =	27576	psi	ADM05, Case 17

Acceptable

Thru-bolt Check

diameter of bolt =	0.25	in	
Reaction load =	-1161		
Shear Capacity per bolt =	982	lbs	50 ksi yield SS bolts used
For two bolts in double shear =	3927	lbs	

Acceptable

Aldo F. Colandrea, Ph.D., P.E.
13710 Reeck RD., Southgate MI 48195
734-324-2924W, 734-735-3915C

Rafter Section Properties

See Attachment #1 for sketch of BPC mullion base cross-section.

	b	h	A	y	Ay	d	Io	Ad^2
left wall	0.0900	0.8130	0.0732	0.4065	0.0297	0.0031	0.0040	0.0000
left in wall	0.0900	0.7110	0.0640	1.0195	0.0652	0.6161	0.0027	0.0243
rt in wall	0.0900	0.7110	0.0640	1.0195	0.0652	0.6161	0.0027	0.0243
right wall	0.0900	0.8130	0.0732	0.4065	0.0297	0.0031	0.0040	0.0000
midd base	0.3650	0.0900	0.0329	0.6190	0.0203	0.2156	0.0000	0.0015
midd wall	0.0900	0.4490	0.0404	0.3495	0.0141	-0.0539	0.0007	0.0001
left in lip	0.0940	0.1250	0.0118	0.7505	0.0088	0.3471	0.0000	0.0014
rt in lip	0.0940	0.1250	0.0118	0.7505	0.0088	0.3471	0.0000	0.0014
lip base	0.4060	0.0630	0.0256	0.6563	0.0168	0.2529	0.0000	0.0016
lower base	2.3200	0.1250	0.2900	0.0625	0.0181	-0.3409	0.0004	0.0337
Totals			0.6867		0.2770		0.0146	0.0884

ybott = 0.4034 depth = 1.3750 in
I tot = 0.1030
Sbot = 0.2552
Stop = 0.1060

Additional cap to BPC mullion base

	b	h	A	y	Ay	d	Io	Ad^2
top left end	0.5000	0.0625	0.0313	1.4688	0.0459	0.7825	0.0000	0.0191
top ctr pl	1.3900	0.1250	0.1738	1.4375	0.2498	0.7512	0.0002	0.0981
top rt end	0.5000	0.0625	0.0313	1.4688	0.0459	0.7825	0.0000	0.0191
left wall	0.0550	0.1250	0.0069	1.4375	0.0099	0.7512	0.0000	0.0039
rt wall	0.0550	0.1250	0.0069	1.4375	0.0099	0.7512	0.0000	0.0039
left nub	0.0550	0.0625	0.0034	1.3438	0.0046	0.6575	0.0000	0.0015
rt nub	0.0550	0.0625	0.0034	1.3438	0.0046	0.6575	0.0000	0.0015
BPC base			0.6867	0.4034	0.2770	-0.2829	0.1030	0.0550
Totals			0.9435		0.6475		0.1032	0.2020

ybott = 0.6863 depth = 1.5000 in
I tot = 0.3052
Sbot = 0.4448
Stop = 0.3751

Attachment #1

Aldo F. Colandrea, Ph.D., P.E.
13710 Reeck RD., Southgate MI 48195
734-324-2924W, 734-735-3915C

Job Walmart Canopies
Page 8 Date 09/09/11

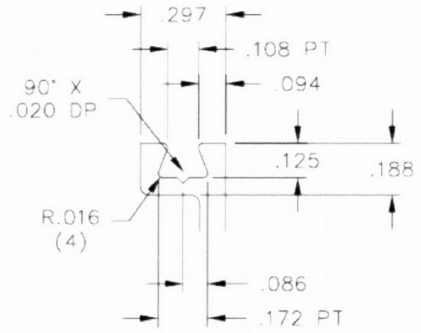

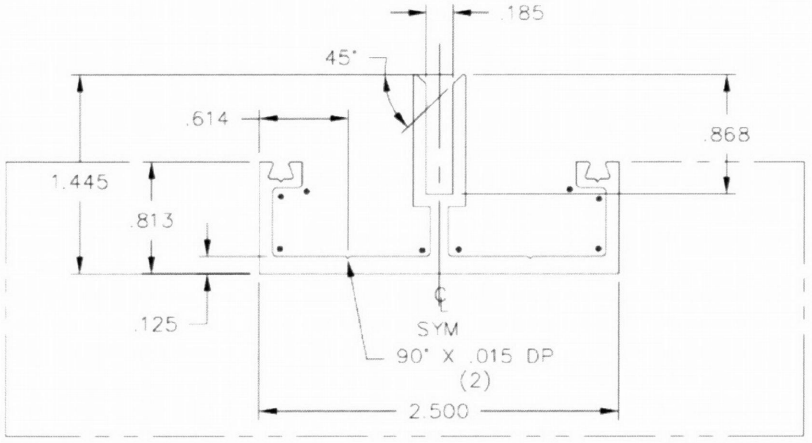

EXPOSED SURFACE

DUO-GARD

(x) DENOTES FULL R (2)
(•) DENOTES .031 R (4)
TYPICAL UNMARKED WALL .090
BREAK SHARP CORNERS .015 R

Duo-Gard Industries, Inc.
40442 Koppernick Road, Canton, MI 48185
734/207-9700 fax 734/207-7995

AREA	.708	SQ.IN.			
WT/FT	.843	LBS.			
PERIMETER	14.134	IN.	DESCRIPTION:	BPC MULLION BASE	
EXPOSED SURFACE	.344	SQ. FT.	DR BY:	BDH	DATE: 2/10/09
FINISH AREA	1.179	SQ. FT.	CHECK:	X	SCALE: FULL
CLASS	SOLID		MATERIAL:	6063-T5	
CIRCLE SIZE	3.00	IN.	VENDOR/DIE#:	X	PART # BMB-16

Attachment #2

Aldo F. Colandrea, Ph.D., P.E.
13710 Reeck RD., Southgate MI 48195
734-324-2924W, 734-735-3915C

ULTIMATE STRENGTHS

SIZE	MINIMUM TORSIONAL STRENGTH (Inch-Pounds)	MINIMUM TENSILE STRENGTH (Pounds)	SHEAR STRENGTH (Pounds)
4-24	14	750	490
4-40	14	800	520
6-20	25	1125	740
6-32	26	1200	790
8-18	42	1575	1050
8-32	50	1900	1255
10-16	61	2100	1400
10-24	65	2350	1570
10-32	75	2700	1800
12-14	92	2800	1875
12-24	100	3250	2175
1/4-14	150	3850	2590
1/4-20	168	4275	2870