STRUCTURAL CALCULATIONS

FOR

BUNK SANDWICHES

NE ALBERTA ST & NE 20TH AVE

PORTLAND, OR 97211

-- MECHANICAL UNITS --

REGISTERED PROFESSIONAL ENGINEER
12,187
OREGON
JULY 15, 1983
JOHN E. NORDLING

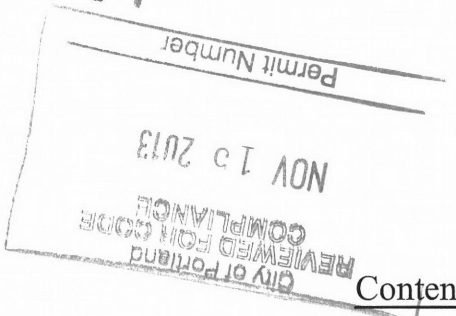

EXPIRES: 12 / 31 / 14

14

Permit Number
NOV 15 2013
City of Portland
REVIEWED FOR CODE COMPLIANCE

13-226603-M71

Contents

Summary	S1
Details A - F	D1 - D6
Gravity Calculations	G1 - G5
Lateral Calculations	L1 - L2
Enclosures	E1 - E4

Contact Person: John E Nordling, PE

NORDLING STRUCTURAL ENGINEERS, LLC

6775 SW 111th, Suite 200 · Beaverton OR, 97008

Proj. No.: 13-407

BUNK SANDWICHES
MECH UNITS

OREGON HEATING & AIR CONDITIONING

Date: NOV 2013 By: JEN Sheet No.: COVER

SUMMARY

ROOF TOP MECHANICAL UNIT SEISMIC REVIEW

2010 Oregon Structural Specialty Code

Seismic

Occupancy Catagory II
Site Class - D
Seisimic Design Catagory - D
S_S = 0.960 S_1 = 0.333
S_{DS} = 0.714 S_{D1} = 0.385

[1] HOOD

weight	578 lbs
length	84"
width	54"
Support:	(4) ½"ϕ Threaded Rods Cont angle at exsiting wall

[2] Supply Fan

weight	385 lbs
length	27⅜"
width	66¼"
height	29¾"
Support:	(4) ½"ϕ Threaded Rods Angle braces each direction

[3] ATTACH HOOD TO STUD WALL W/ L 2 x 2 x 20ga CONT ANGLE. PROVIDE #10 SCREWS EACH STUD & #8 SELF TAPPING SCREWS TO HOOD @12" o/c.

NORDLING STRUCTURAL ENGINEERS, LLC
6775 SW 111th, Suite 200 · Beaverton OR, 97008

Proj. No.: 13-407
BUNK SANDWICHES
MECH UNITS
OREGON HEATING & AIR CONDITIONING
Date: NOV 2013 By: JEN Sheet No.: S1

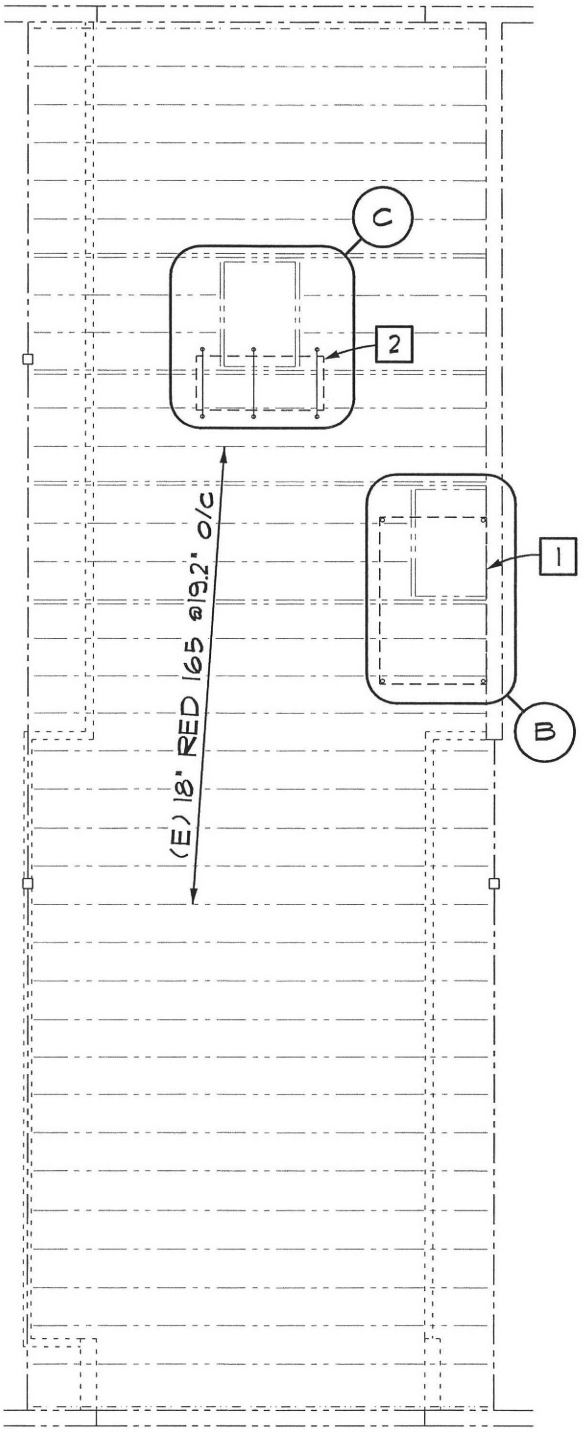

A FRAMING PLAN

REGISTERED PROFESSIONAL ENGINEER
12,187
OREGON
JULY 15, 1993
JOHN E. NORDLING

EXPIRES: 12 / 31 / 14

NORDLING STRUCTURAL ENGINEERS, LLC
6775 SW 111th, Suite 200 · Beaverton OR, 97008

Proj. No.: 13-407
BUNK SANDWICHES
MECH UNITS
OREGON HEATING & AIR CONDITIONING
Date: NOV 2013 By: JEN Sheet No.: D1

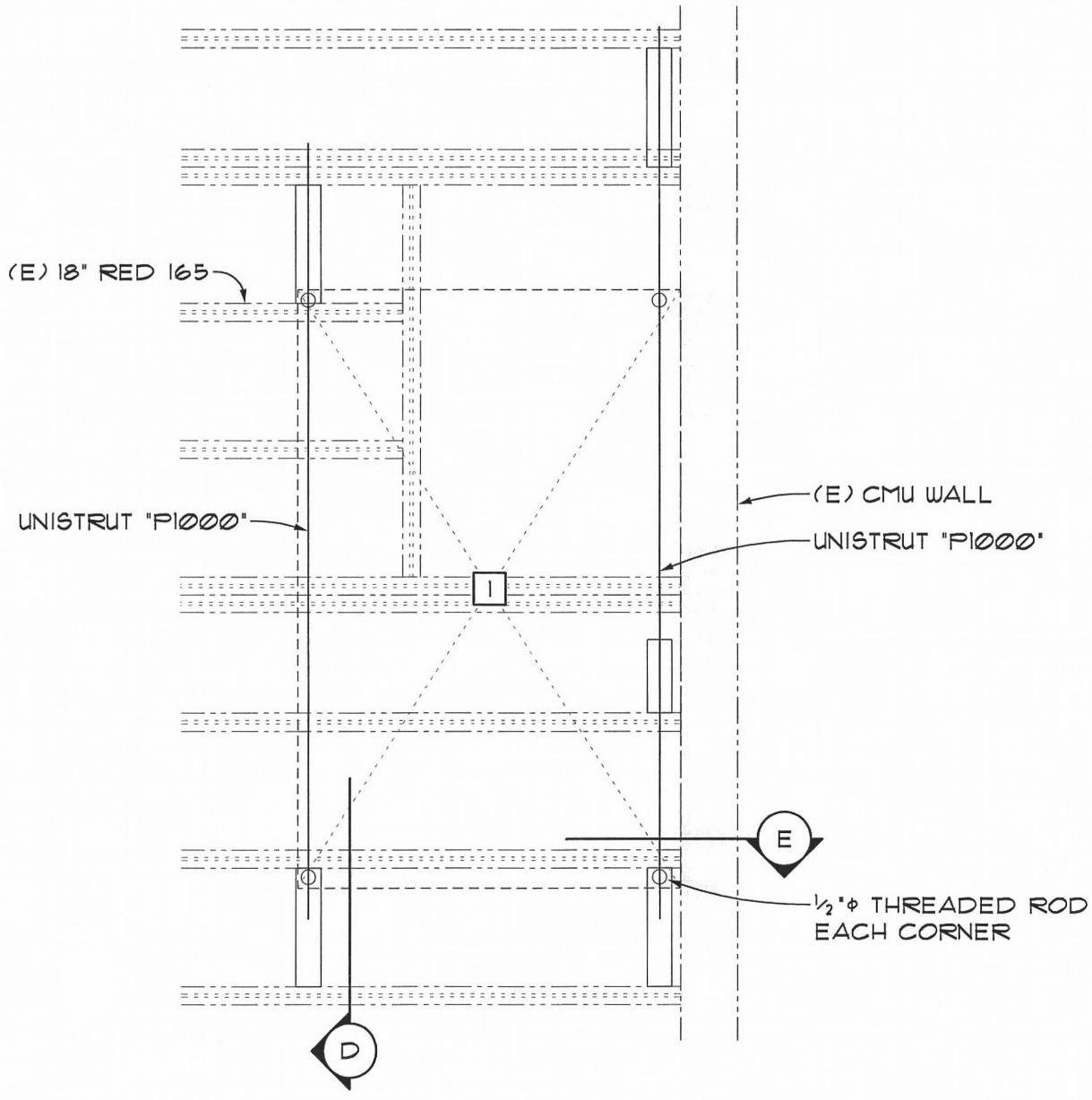

B ENLARGED FRAMING PLAN

REGISTERED PROFESSIONAL ENGINEER
12,187
OREGON
JULY 15, 1983
JOHN E. NORDLING

EXPIRES: 12 / 31 / 14

NORDLING STRUCTURAL ENGINEERS, LLC
6775 SW 111th, Suite 200 · Beaverton OR, 97008

Proj. No.: 13-407
BUNK SANDWICHES
MECH UNITS
OREGON HEATING & AIR CONDITIONING
Date: NOV 2013 By: JEN Sheet No.: D2

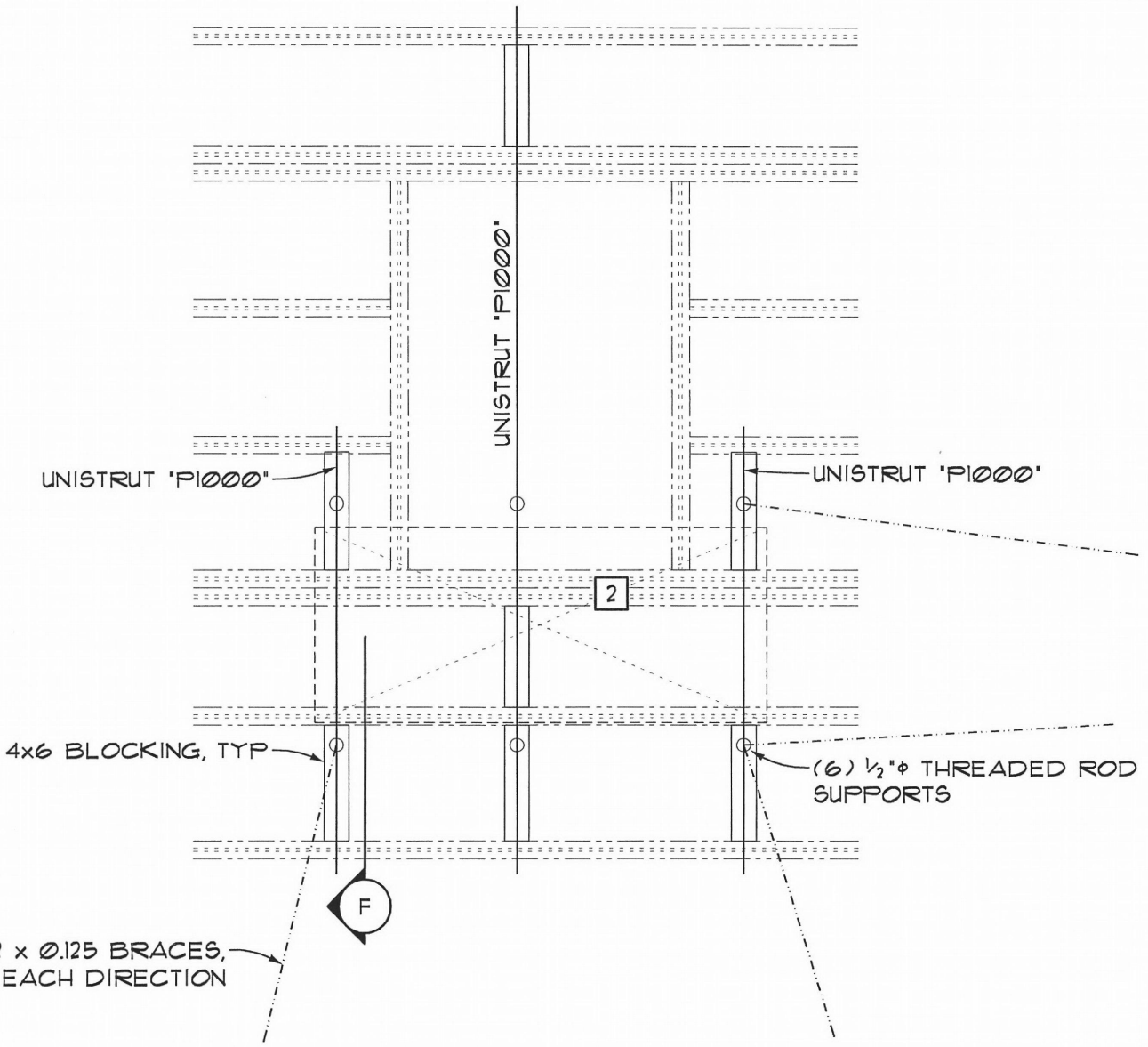

C ENLARGED FRAMING PLAN

REGISTERED PROFESSIONAL ENGINEER
12,187
OREGON
JULY 15, 1983
JOHN E. NORDLING
EXPIRES: 12 / 31 / 14

NORDLING STRUCTURAL ENGINEERS, LLC
6775 SW 111th, Suite 200 · Beaverton OR, 97008

Proj. No.: 13-407
BUNK SANDWICHES
MECH UNITS
OREGON HEATING & AIR CONDITIONING
Date: NOV 2013 By: JEN Sheet No.: D3

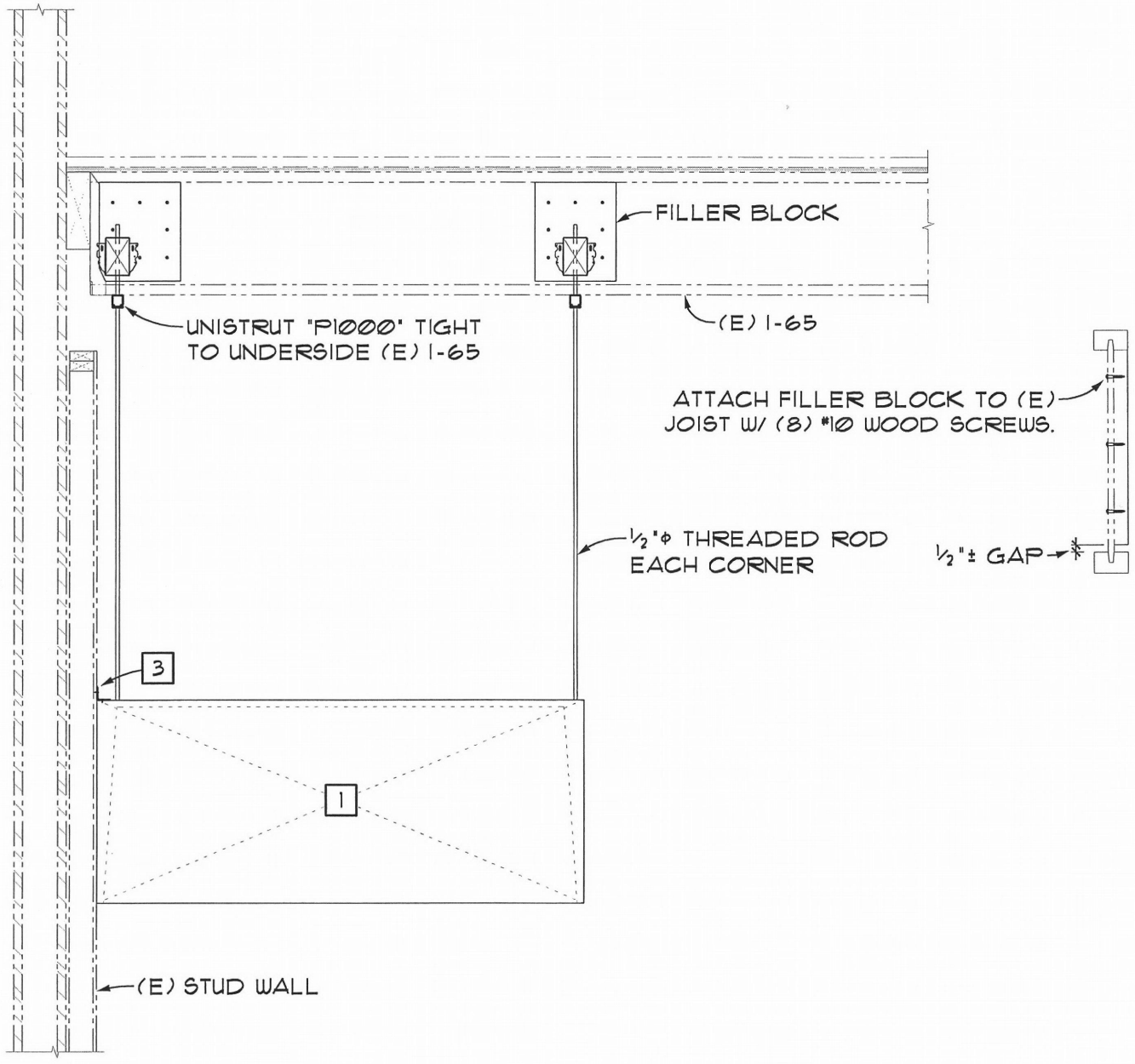

E HOOD SECTION

REGISTERED PROFESSIONAL ENGINEER
12,187
OREGON
JULY 15, 1987
JOHN E. NORDLING

EXPIRES: 12 / 31 / 14

NORDLING STRUCTURAL ENGINEERS, LLC
6775 SW 111th, Suite 200 · Beaverton OR, 97008

Proj. No.: 13-407
BUNK SANDWICHES
MECH UNITS
OREGON HEATING & AIR CONDITIONING
Date: NOV 2013 By: JEN Sheet No.: D5

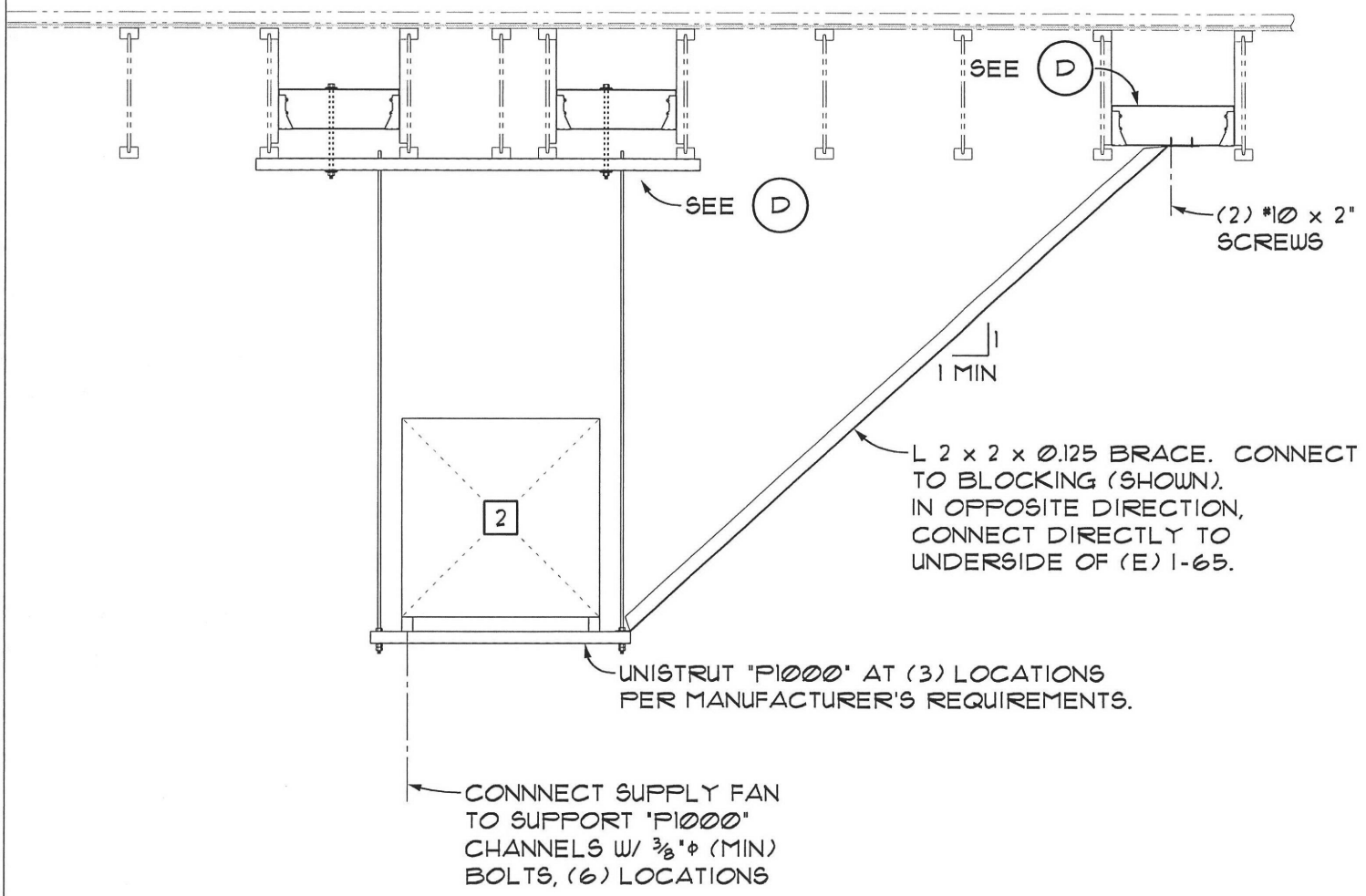

F SUPPLY FAN SECTION

REGISTERED PROFESSIONAL ENGINEER
12,187
OREGON
JULY 15, 1982
JOHN E. NORDLING

EXPIRES: 12 / 31 / 14

NORDLING STRUCTURAL ENGINEERS, LLC
6775 SW 111th, Suite 200 · Beaverton OR, 97008

Proj. No.: 13-407
BUNK SANDWICHES
MECH UNITS
OREGON HEATING & AIR CONDITIONING
Date: NOV 2013 By: JEN Sheet No.: D6

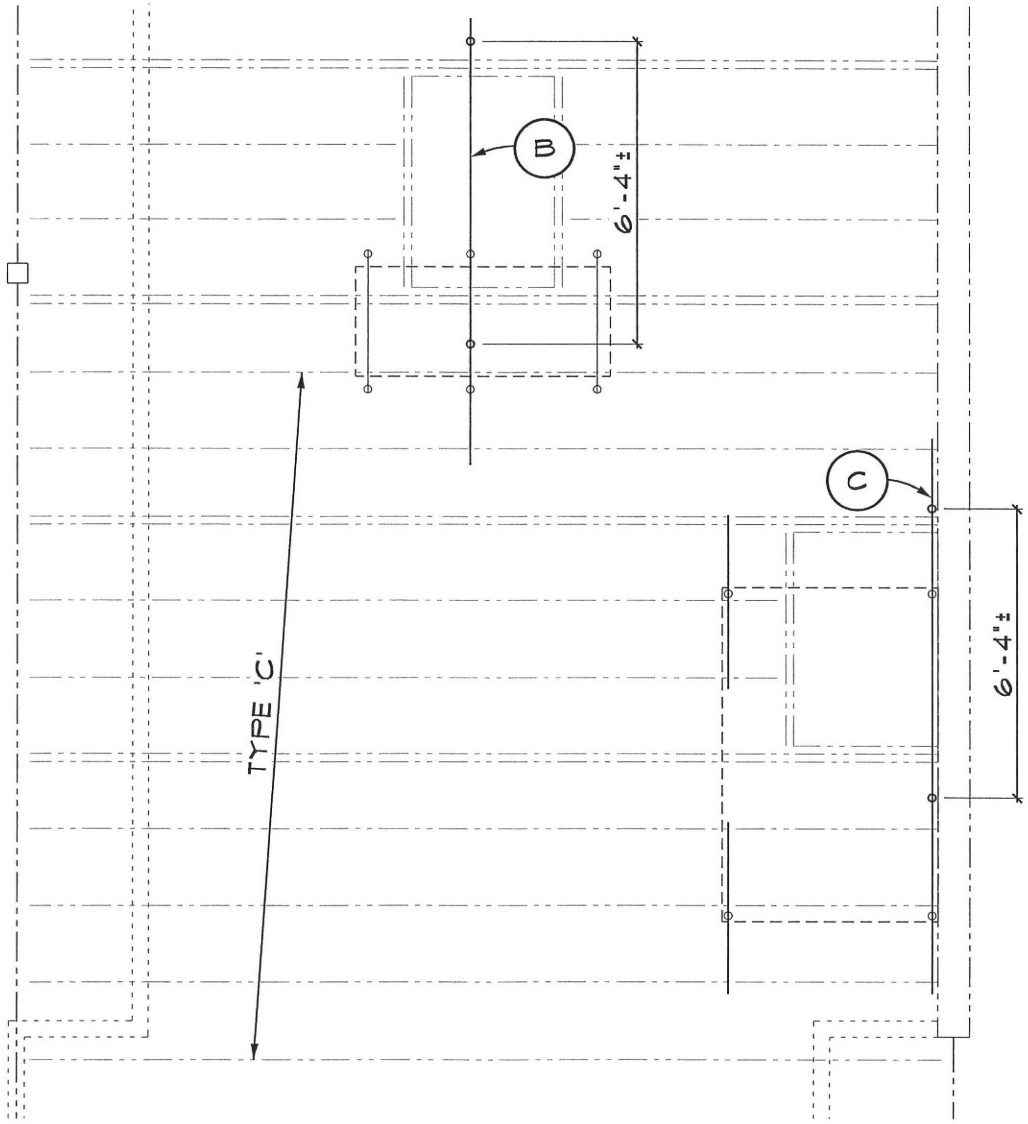

ORIGINAL DESIGN

DESIGN CONSIDERATIONS

BUILDING CODE: 2009 IBC

FLOOR DESIGN

FLOOR LIVE LOAD:	50 PSF
DEAD LOAD:	50 PSF
PARTITION LOAD:	15 PSF
CORRIDOR LOAD:	80 PSF

PRODUCT TYPE CHART	
SEE MATERIAL LIST FOR MORE INFORMATION	
Type A	20" RED-190 @ 19.2" oc
Type B	20" RED-165 @ 19.2" oc UNO
Type C	18" RED-165 @ 19.2" oc UNO
Type D	18" RED-190 @ 19.2" oc
Type Z	3½"x20" RED-LAM LVL

NORDLING STRUCTURAL ENGINEERS, LLC
6775 SW 111th, Suite 200 · Beaverton OR, 97008

Proj. No.: 13-407
BUNK SANDWICHES
MECH UNITS
OREGON HEATING & AIR CONDITIONING
Date: NOV 2013 By: JEN Sheet No.: G1

A (E) 18" RED I-65

P_M 182 lbs

364 lbs / (2) JOISTS = 182 lbs

PSF	PSF	
DL	LL	TW
30	75	19.2" o/c

LL: RETAIL ABOVE FIRST FLOOR

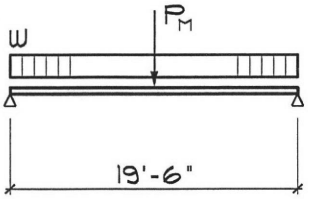

(E) 18" RED I-65 **-ok-**

SHEET G3: ORIGINAL

SHEET G4: PLUS MECH UNIT

B UNISTRUT "P1000"

P_M 91 lbs

364 lbs / (6) Supports = 91 lbs MAX

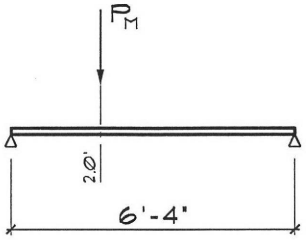

Unistrut "P1000"

Ix	0.185	Iy	0.236
Sx	0.202	Sy	0.290
E	29,000	ksi	

	R1	R2
R_{DL}	0	0
LL	62	29
TL	62	29

V	MAX	**62**	lbs
M	MAX	**124**	ft-lbs

fb	**7,352**	<	**18,180**	psi

	S1
Δ_{DL}	0.00
Δ_{LL}	**-0.13**
	L / 590
Δ_{TL}	-0.13
	L / 590

C MEMBER

P_M 150 lbs

578 lbs / (2) JOISTS = 182 lbs

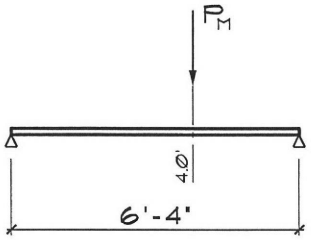

Unistrut "P1000"

Ix	0.185	Iy	0.236
Sx	0.202	Sy	0.290
E	29,000	ksi	

	R1	R2
R_{DL}	0	0
LL	55	95
TL	55	95

V	MAX	**95**	lbs
M	MAX	**217**	ft-lbs

fb	**12,891**	<	**18,180**	psi

	S1
Δ_{DL}	0.00
Δ_{LL}	**-0.23**
	L / 326
Δ_{TL}	-0.23
	L / 326

NORDLING STRUCTURAL ENGINEERS, LLC

6775 SW 111th, Suite 200 · Beaverton OR, 97008

Proj. No.: 13-407

BUNK SANDWICHES
MECH UNITS

OREGON HEATING & AIR CONDITIONING

Date: NOV 2013 By: JEN Sheet No.: G2

RedSpec™ by RedBuilt™
v7.0.15

Project: 20 20 Alberta
Location: Portland, OR
Folder: Second Floor
Date: 6/14/12 7:45 PM
Designer: Mike Russell
Comment:

Type: Type C2

18" Red-I65™ @ 19.2" o.c. with Glued Sheathing

This product meets or exceeds the set design controls for the application and loads listed

DESIGN CONTROLS	% Allow.	Design	Allow.	DOL - Control	Pass/Fail
Shear (lb)	57%	1766	3080	100% - All Loads	PASS
Positive Moment (ft-lb)	82%	8482	10380	100% - Conc. Load	PASS

DEFLECTIONS (in)	% Allow.	Design	Allow.	Design	Allow.	Pass/Fail
Span Live	71%	0.272	0.384	L / 848	L / 600	PASS
Span Total	75%	0.481	0.640	L / 479	L / 360	PASS

FloorChoice™ Rating: 8.0

Performance rating is based on: 24 oc (23/32", 3/4") sheathing, glued and nailed, simple span, flexible support. RedSpec has not performed a structural analysis of the sheathing.

SUPPORTS	Support 1	Support 2
Live Reaction, Critical (lb) (DOL%)	998 (100)	998 (100)
Dead Reaction (lb)	768	768
Total Reaction (lb) (DOL%)	1766 (100)	1766 (100)
Bearing	Flush	Flush
Support	Beam	Ledger
Req'd Bearing, No Stiffeners (in)	3.09	3.09
Req'd Bearing, Stiffeners (in)	1.77	1.77

HANGERS	Model	Top	Face	Member	Header	Size
Left	MIU2.56/16*		24-10dx1.5"	2-10dx1.5"	Glulam DF/SP	5.125x30
Right	MIT318*	4-10d	4-10d	2-10dx1.5"	Sawn DF	4x12

(* = Web stiffeners required)

SPANS AND LOADS

Dimensions represent horizontal design spans.

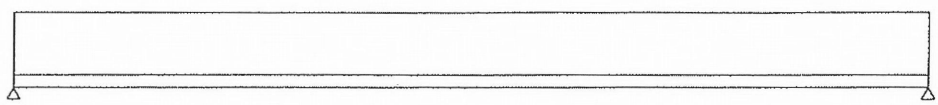

19'- 2.314"

APPLICATION LOADS

Type	Units	DOL	Live	Dead	Partition	Tributary	Member Type
Uniform	psf	Floor(100%)	50	50	15	19.2"	Glued Floor Joist

NOTES

- Building code: IBC. Methodology: Allowable Stress Design
- Continuous lateral support required at top edge. Lateral support at bottom edge shall be per RedBuilt recommendations.
- Joist design includes consideration for a 2000 lb load distributed over a 30" square area and all live loads removed.

C:\Users\Mike\Documents\RedSpec\2020 Alberta.red

The products noted are intended for interior, untreated, non-corrosive applications with normal temperatures and dry conditions of use, and must be installed in accordance with local building code requirements and RedBuilt™ recommendations. The loads, spans, and spacing have been provided by others and must be approved for the specific application by the design professional for the project. Unless otherwise noted, this output has not been reviewed by a RedBuilt™ associate. PRODUCT SUBSTITUTION VOIDS THIS ANALYSIS.

RedBuilt™, RedSpec™, Red-I™, Red-I45™, Red-I65™, Red-I65T™, Red-I90™, Red-I90H™, Red-I90HS™, Red-L™, Red-LT™, Red-W™, Red-S™, Red-M™, Red-H™, RedLam™, FloorChoice™ are trademarks of RedBuilt LLC, Boise ID, USA. Copyright © 2010-2012 RedBuilt LLC. All rights reserved.

G3
ORIGINAL

RedSpec™ by RedBuilt™
v7.0.16

Project: Project
Location:
Folder: Folder
Date: 11/7/13 10:54 AM
Designer:
Comment:

Type: Type

18" Red-I65™ @ 19.2" o.c. with Glued Sheathing

This product meets or exceeds the set design controls for the application and loads listed

DESIGN CONTROLS	% Allow.	Design	Allow.	DOL - Control		Pass/Fail
Shear (lb)	60%	-1858	3080	100% - All Loads		PASS
Positive Moment (ft-lb)	90%	9343	10380	100% - All Loads		PASS
DEFLECTIONS (in)	**% Allow.**	**Design**	**Allow.**	**Design**	**Allow.**	**Pass/Fail**
Span Live	65%	0.313	0.480	L / 736	L / 480	PASS
Span Total	54%	0.522	0.960	L / 441	L / 240	PASS

FloorChoice™ Rating: 8.3

Performance rating is based on: 24 oc (23/32", 3/4") sheathing, glued and nailed, simple span, rigid supports. RedSpec has not performed a structural analysis of the sheathing.

SUPPORTS	Support 1	Support 2
Live Reaction, Critical (lb) (DOL%)	1088 (100)	1090 (100)
Dead Reaction (lb)	768	768
Total Reaction (lb) (DOL%)	1855 (100)	1858 (100)
Bearing	Flush	Flush
Support	Wall	Wall
Req'd Bearing, No Stiffeners (in)	3.39	3.40
Req'd Bearing, Stiffeners (in)	1.93	1.93

HANGERS	Model	Top	Face	Member	Header	Size
Left	None Selected					
Right	None Selected					

SPANS AND LOADS

Dimensions represent horizontal design spans.

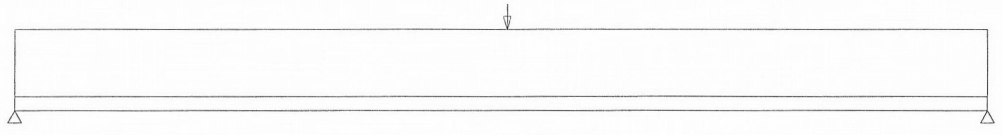

19'- 2.314"

APPLICATION LOADS

Type	Units	DOL	Live	Dead	Partition	Tributary	Member Type
Uniform	psf	Floor(100%)	50	50	15	19.2"	Glued Floor Joist

ADDITIONAL LOADS

Type	Units	DOL	Live	Dead	Location from left	Application	Comment
Point	lb	Floor(100%)	182	0	9'-9.0"	Adds To	Supply Fan

MECH UNIT

NOTES

- Building code: IBC. Methodology: Allowable Stress Design
- Continuous lateral support required at top edge. Lateral support at bottom edge shall be per RedBuilt recommendations.
- Joist design includes consideration for a 2000 lb load distributed over a 30" square area and all live loads removed.

C:\Documents and Settings\Jonathan H Walters\My Documents\RedSpec\x.red

The products noted are intended for interior, untreated, non-corrosive applications with normal temperatures and dry conditions of use, and must be installed in accordance with local building code requirements and RedBuilt™ recommendations. The loads, spans, and spacing have been provided by others and must be approved for the specific application by the design professional for the project. Unless otherwise noted, this output has not been reviewed by a RedBuilt™ associate. PRODUCT SUBSTITUTION VOIDS THIS ANALYSIS.

RedBuilt™, RedSpec™, Red-I™, Red-I45™, Red-I65™, Red-I65T™, Red-I90™, Red-I90H™, Red-I90HS™, Red-L™, Red-LT™, Red-W™, Red-S™, Red-M™, Red-H™, RedLam™, FloorChoice™ are trademarks of RedBuilt LLC, Boise ID, USA. Copyright © 2010-2012 RedBuilt LLC. All rights reserved.

G4
W/ MECH UNIT

BEAM LOADING – P1000

Span In	Max Allowable Uniform Load Lbs	Defl. at Uniform Load In	Uniform Loading at Deflection Span/180 Lbs	Span/240 Lbs	Span/360 Lbs
24	1,690	0.06	1,690	1,690	1,690
36	1,130	0.13	1,130	1,130	900
48	850	0.22	850	760	510
60	680	0.35	650	490	320
72	560	0.50	450	340	220
84	480	0.68	330	250	170
96	420	0.89	250	190	130
108	380	1.13	200	150	100
120	340	1.40	160	120	80
144	280	2.01	110	80	60
168	240	2.74	80	60	40
192	210	3.57	60	50	NR
216	190	4.52	50	40	NR
240	170	5.58	40	NR	NR

ELEMENTS OF SECTION P1000/P1001

Parameter	P1000	P1001
Area of Section	0.556 In^2	1.112 In^2
Axis 1-1		
Moment of Inertia (I)	0.185 In^4	0.930 In^4
Section Modulus (S)	0.202 In^3	0.572 In^3
Radius of Gyration (r)	0.577 In	0.915 In
Axis 2-2		
Moment of Inertia (I)	0.236 In^4	0.472 In^4
Section Modulus (S)	0.290 In^3	0.580 In^3
Radius of Gyration (r)	0.651 In	0.651 In

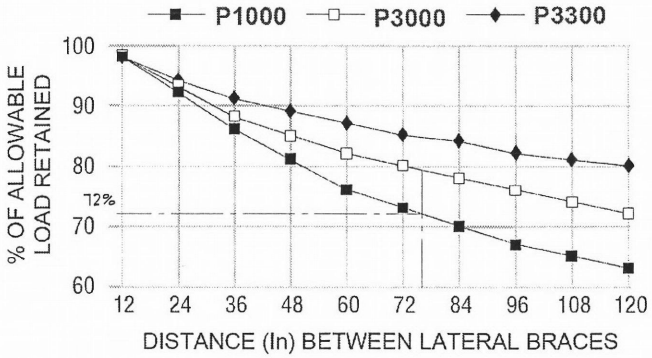

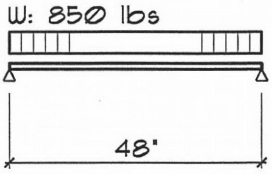

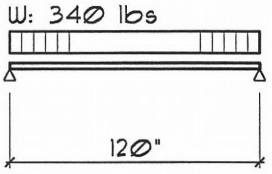

F_b = 25,200 psi

P1000

Ix 0.185 Iy 0.236
Sx 0.202 Sy 0.290
E 29,000 ksi

R DL	0		0
LL	426		426
TL	426		426
Shear lbs	426		426
Moment ft-lbs	0	426 @ 2.00'	0
Δ DL	0.00	0.000	0.00
Δ LL	0.00	-0.229	0.00
in	0.00	-0.229	0.00
fb psi	0	25,307	0

P1000

Ix 0.185 Iy 0.236
Sx 0.202 Sy 0.290
E 29,000 ksi

R DL	0		0
LL	170		170
TL	170		170
Shear lbs	170		170
Moment ft-lbs	0	425 @ 5.00'	0
Δ DL	0.00	0.000	0.00
Δ LL	0.00	-1.426	0.00
in	0.00	-1.426	0.00
fb psi	0	25,248	0

NORDLING STRUCTURAL ENGINEERS, LLC
6775 SW 111th, Suite 200 · Beaverton OR, 97008

Proj. No.: 13-407
BUNK SANDWICHES
MECH UNITS
OREGON HEATING & AIR CONDITIONING
Date: NOV 2013 By: JEN Sheet No.: G5

USGS
Earthquake Hazards Program

2005 ASCE 7 Standard

Location	45° 33' 33.24" N	Ss and S1 = Mapped Spectral Acceleration Values
	122° 38' 39.71" W	NE Alberta St & NE 20th Ave, Portland, OR 97211

Ground Motion Ss **0.960** S1 **0.333**

Occupancy Category	II		Site Coefficients	F_a	1.12
Site Class	D			F_v	1.73
Importance Factor	1.00				
Height of Structure	30.0	ft	S_{MS}	F_a * Ss	1.071
			S_{M1}	F_v * S1	0.577
Design Category (SDC)	D				
			S_{DS}	(2/3) S_{MS}	**0.714**
			S_{D1}	(2/3) S_{M1}	**0.385**

Equipment Braced Below Center of Mass

a_p 2.50 R_p 3.00

$$Fp = \frac{0.4 \cdot a_p \cdot S_{DS} \cdot I_p}{R_p}\left(1 + 2 \cdot \frac{z}{h}\right) \cdot W_p$$

z =	30.0 ft		ASD
F_P =	0.71	W_P -> * 0.7	0.500
z =	9.0 ft		
F_P =	0.38	W_P -> * 0.7	0.267
$F_{P\,MIN}$ =	0.3 S_{DS} I_P W_P		
=	0.214	W_P -> * 0.7	0.150
$F_{P\,MAX}$ =	1.6 S_{DS} I_P W_P		
=	1.14	W_P -> * 0.7	0.800

Eq = 0.267W + 0.2 SDS W

W : Weight of Unit

NORDLING STRUCTURAL ENGINEERS, LLC

6775 SW 111th, Suite 200 · Beaverton OR, 97008

Proj. No.: 13-407

BUNK SANDWICHES
MECH UNITS

OREGON HEATING & AIR CONDITIONING

Date: NOV 2013 By: JEN Sheet No.: L1

1 HOOD

weight 578 lbs

V_{EQ} = 0.267 * 578 lbs + 0.2 * 0.714 * 578 lbs
= 154 lbs + 83 lbs

ATTACH ONE LONG SIDE DIRECTLY TO INTERIOR STUD WALL

PERPENDICULAR TO WALL: LATERAL -ok-

PARALLEL TO WALL: TORSIONAL LATERAL

154 lbs * (54" / 2) / 84" = 50 lbs -ok-

2 Supply Fan

weight 385 lbs

Height	29"	Weight	385 lbs
Length	64"		
Width	27"		

V_{EQ} = 0.267 * 385 lbs + 0.2 * 0.714 * 385 lbs
= 103 lbs + 55 lbs

T = 103 lbs * (29"/2) / 27"
+ 55 lbs / 2
- 0.6 * 385 lbs / 2
= -33 lbs [0 Net Uplift]

V = 103 lbs

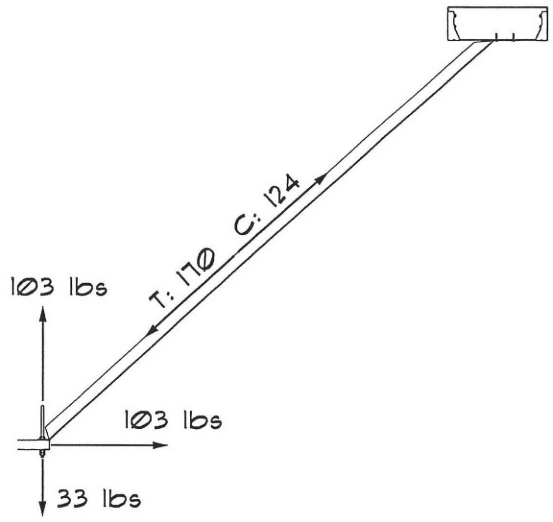

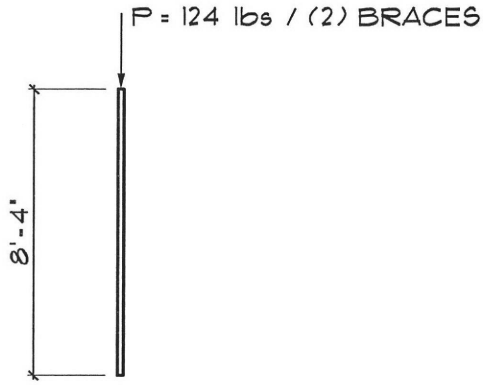

L 1.5 x 1.5 x 0.125			
		H (ft)	K
b x	1.50	8'-4"	1.0
d y	1.50	8'-4"	1.0

fa	0.2	<	3.2	ksi

NORDLING STRUCTURAL ENGINEERS, LLC

6775 SW 111th, Suite 200 · Beaverton OR, 97008

Proj. No.: 13-407

BUNK SANDWICHES
MECH UNITS

OREGON HEATING & AIR CONDITIONING

Date: NOV 2013 By: JEN Sheet No.: L2

HOOD INFORMATION – Job#1787517

HOOD NO.	TAG	MODEL	LENGTH	MAX. COOKING TEMP.	EXHAUST PLENUM					TOTAL SUPPLY CFM	HOOD CONSTRUCTION	HOOD CONFIG.	
					TOTAL EXH. CFM	RISER(S)						END TO END	ROW
						WIDTH	LENG.	DIA.	CFM	S.P.			
1		5430 ND-2-PSP-F	6' 0.00"	600 Deg.	1350	10"	14"		1350	-0.257"	1155	430 SS Where Exposed	ALONE	ALONE

HOOD INFORMATION

HOOD NO.	TAG	FILTER(S)				LIGHT(S)			UTILITY CABINET(S)					FIRE SYSTEM PIPING	HOOD HANGING WGHT
		TYPE	QTY.	HEIGHT	LENGTH	QTY.	TYPE	WIRE GUARD	LOCATION	FIRE SYSTEM TYPE	FIRE SYSTEM SIZE	ELECTRICAL MODEL #	SWITCHES QUANTITY		
1		SS Baffle with Handles	2	20"	16"	2	Incandescent	NO	Left	Ansul R102	3.0	SC-211110FP	1 Light 1 Fan	YES	578 LBS
			2	20"	20"										

HOOD OPTIONS

HOOD NO.	TAG	OPTION
1		BACKSPLASH 80.00" High X 84.00" Long 430 SS
		RIGHT QUARTER END PANEL 23" Top Width, 0" Bottom Width, 23" High 430 SS
		LEFT QUARTER END PANEL 23" Top Width, 0" Bottom Width, 23" High 430 SS
		INSULATION FOR TOP OF HOOD
		INSULATION FOR BACK OF HOOD

PERFORATED SUPPLY PLENUM(S)

HOOD NO.	TAG	POS.	LENGTH	WIDTH	HEIGHT	TYPE	RISER(S)				
							WIDTH	LENG.	DIA.	CFM	S.P.
1		Front	84"	14"	6"	MUA	10"	28"		577	0.155"
						MUA	10"	28"		577	0.155"

EXHAUST FAN INFORMATION – Job#1787517

FAN UNIT NO.	TAG	FAN UNIT MODEL #	CFM	ESP.	RPM	H.P.	ø	VOLT	FLA	WEIGHT (LBS.)	SONES
1	KEX-1	DU85HFA	1350	1.000	1139	0.750	1	230	4.7	85	12

MUA FAN INFORMATION – Job#1787517

FAN UNIT NO.	TAG	FAN UNIT MODEL #	BLOWER	HOUSING	CFM	ESP.	RPM	H.P.	ø	VOLT	FLA	WEIGHT (LBS.)	SONES
2	MUA-1	A1-G10	G10D	A1	1155	0.750	1008	1.000	1	230	6.1	364	23

FAN OPTIONS

FAN UNIT NO.	TAG	OPTION (Qty. – Descr.)
1	KEX-1	1 – Grease Box
		1 – ECM Wiring Package for Exhaust Fans or Untempered Supply Fans – Manual Speed Control.
2	MUA-1	1 – A 1 Indoor Hanging Option – Includes 2 HSA125 Hanging Spring Isolators per Uni-Strut
		1 – ECM Wiring Package for Exhaust Fans or Untempered Supply Fans – Manual Speed Control.
		1 – Motorized Backdraft Damper for Size 1 Housing
		1 – Insulated Blower Section Size 1-2 Commercial

CURB ASSEMBLIES

NO.	ON FAN	WEIGHT	ITEM	SIZE
1	# 1	36 LBS	Curb	23.000"W x 23.000"L x 20.000"H Vented Hinged

ELECTRICAL PACKAGES – Job#1787517

NO.	TAG	PACKAGE #	LOCATION	SWITCHES		OPTION	FANS CONTROLLED				
				LOCATION	QUANTITY		TYPE	ø	H.P.	VOLT	FLA
1		SC-211110FP	Utility Cabinet Left	Utility Cabinet Left	1 Light	Smart Controls Thermostatic Control	Exhaust	1	0.750	230	4.7
				Hood # 1	1 Fan		Supply	1	1.000	230	6.1

E1

CAPTIVE-AIRE

JOB Bunk Sandwiches Portland	
LOCATION Tualatin, OR	
DATE 11/2/2013	JOB # 1787517
DWG # 1	DRAWN BY Sean Elias
REV.	SCALE 3/8" = 1'-0"

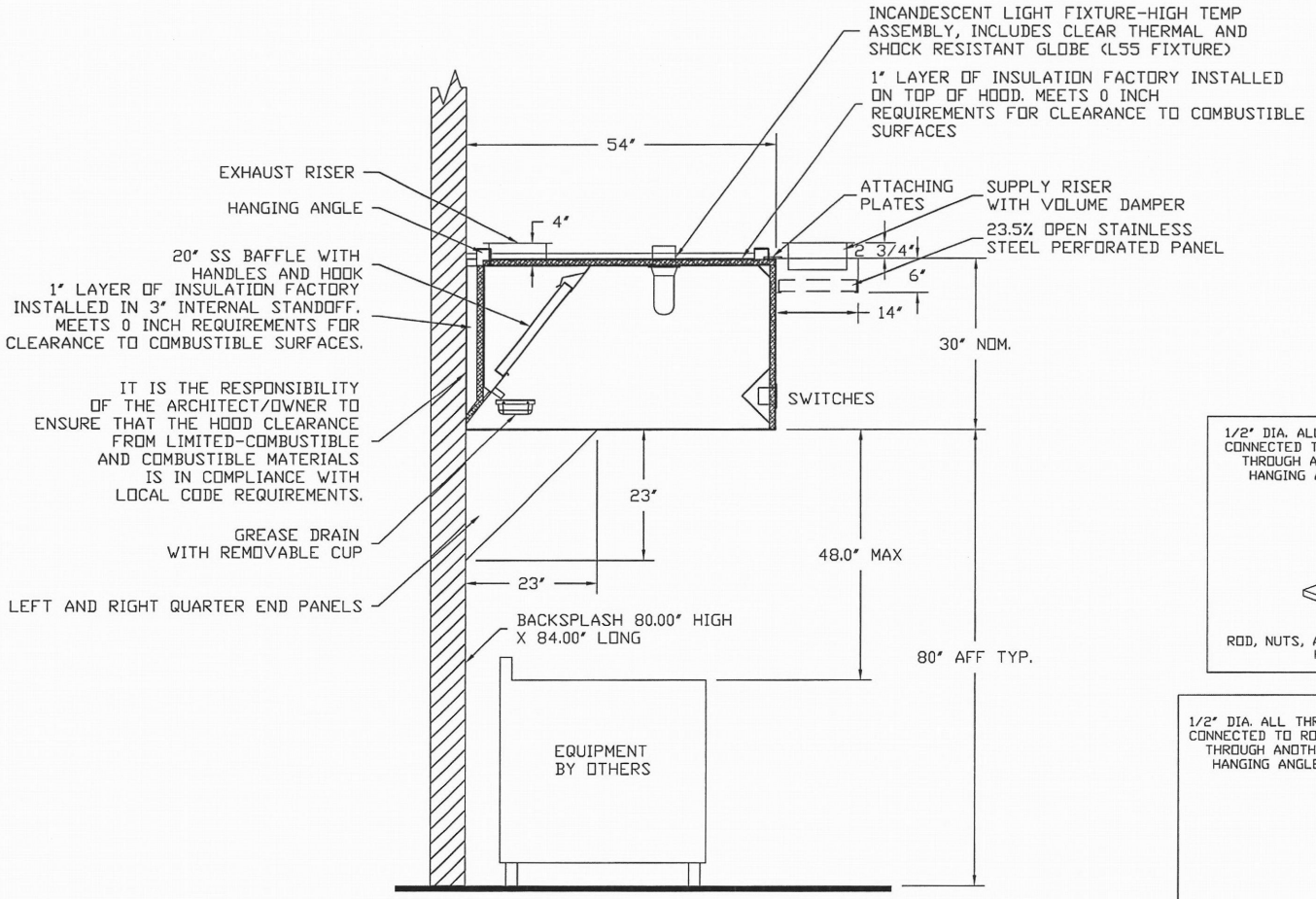

SECTION VIEW – MODEL 5430ND-2-PSP-F
HOOD – #1

PSP HANGING ANGLE

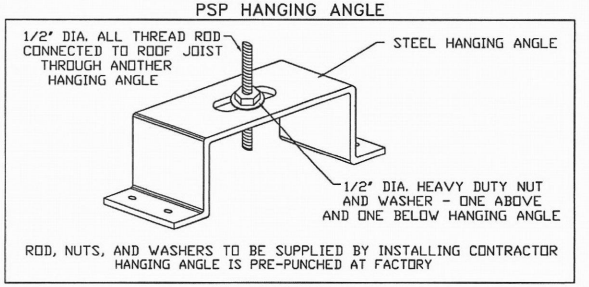

CORNER HANGING ANGLE

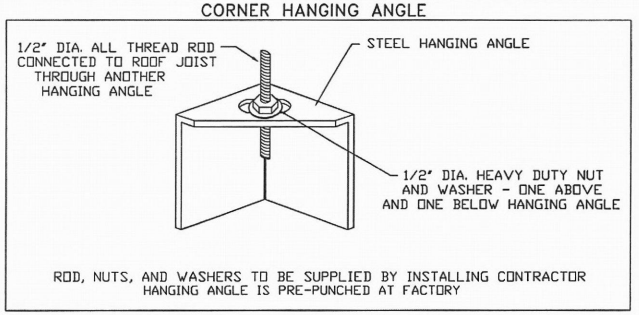

JOB Bunk Sandwiches Portland	
LOCATION Tualatin, OR	
DATE 11/2/2013	JOB # 1787517
DWG # 2	DRAWN BY Sean Elias
REV.	SCALE 3/8" = 1'-0"

CAPTIVEAIRE

52

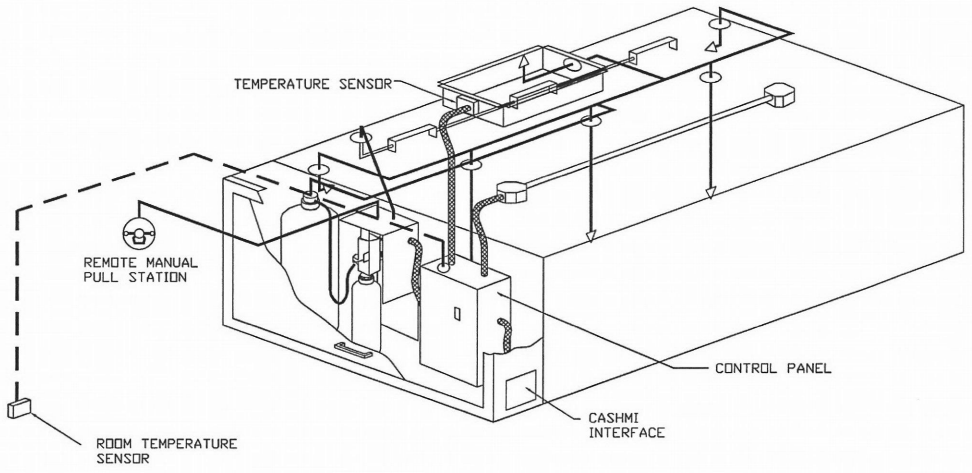

TYPICAL CONTROL CENTER INSTALLATION

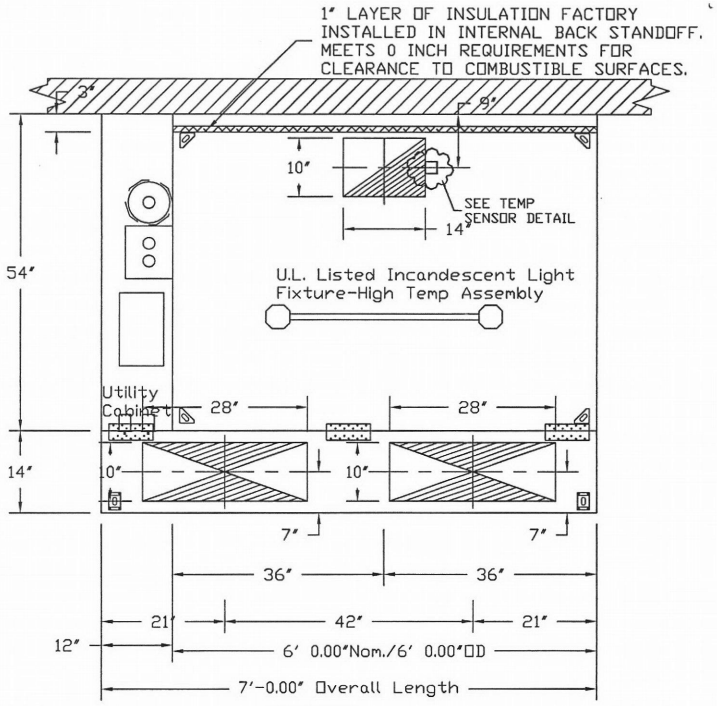

PLAN VIEW – Hood #1
6' 0.00" LONG 5430ND-2-PSP-F

E3

JOB Bunk Sandwiches Portland		
LOCATION Tualatin, OR		
DATE 11/2/2013	JOB #	1787517
DWG # 3	DRAWN BY	Sean Elias
REV.	SCALE	3/8" = 1'-0"

FAN #2 A1-G10 - SUPPLY FAN (MUA-1)
1. DIRECT DRIVE DIRECT DRIVE UNTEMPERED SUPPLY UNIT WITH 10" BLOWER IN SIZE #1 HOUSING WITH SPEED CONTROL, DISCONNECT SWITCH.
2. V-BANK EZ FILTERS - INDOOR
3. SIDE DISCHARGE - AIR FLOW RIGHT -> LEFT
4. INDOOR HANGING CRADLE FOR THE SIZE 1 UNTEMPERED UNIT. 2 HSA125 HANGING ISOLATORS PER UNI-STRUT INCLUDED.
5. ECM WIRING PACKAGE AND MANUAL CONTROL FOR ECM MOTORS ON PRVS.
6. MOTORIZED BACK DRAFT DAMPER 16" X 18", STANDARD GALVANIZED CONSTRUCTION, 1 1/4" REAR FLANGE, WITH H-2000B/8 MOTOR, WALL SUPPLY MOUNT, FOR SIZE 1 UNTEMPERED FAN HOUSING (5191)
7. INSULATED BLOWER HOUSING SIZES 1-2 COMMERCIAL MODULAR

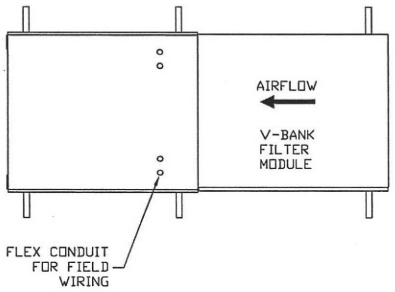

ACCESS PANELS ON LEFT SIDE IF FACING AIR INLET

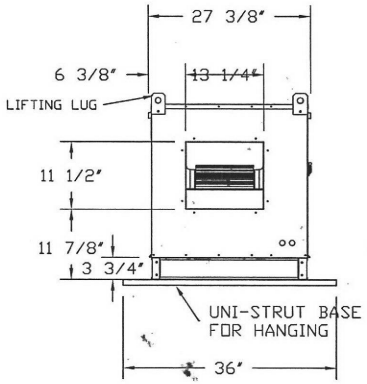

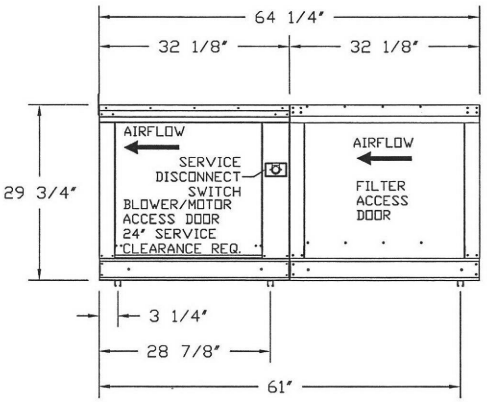

JOB Bunk Sandwiches Portland	
LOCATION Tualatin, OR	
DATE 11/2/2013	JOB # 1787517
DWG # 5	DRAWN BY Sean Elias
REV.	SCALE 3/8" = 1'-0"

CAPTIVEAIRE

H24