A *Hardy Frame*® Product

To: **The City of Portland, Oregon**

From: **Steven Helton**
Hardy Frames/ Zone Four
250 Klug Circle
Corona, CA 92880

Phone: (951) 245-9525
Fax: (951) 245-9653
Email: shelton@mii.com

Number of pages incl. cover: 1

Date: October 15, 2013

Subject: Division Street Apartments Structural Checksheet Response
4725 SE Division Street

Comments:

The following response in accordance to the PC Comments and addressed in the latest Submittal attached.

- #1 - Run Type QC 5 is reduced to a QC 5-3 for 3 levels of demand @ ASD level & Shear.
- #2 - Run Type QC 7 is reduced to a QC 7-3 for 3 levels of demand @ ASD level & Shear.
- #3 - Addition of (2) locations of Run Type QC 6.
- #4 - Contractor to located longest Shear Wall in order to maintain a continuous rod system for full height of the building all levels.
- #5 - EOR review comments have been addressed in Z4 QC Submittal R1 9/11/2013.
- #6 - Z4 QC Submittal R1 9/11/2013 is now voided and has been attached to the current Submittal.
- #7 - N/A.

Sincerely,

Steven Helton

■ REVIEWED ☐ REVISE AND RESUBMIT
☐ REJECTED ☐ FURNISH AS CORRECTED
Corrections or comments made on the shop drawings during this review do not relieve contractor from compliance with requirements of the drawings and specifications. This check is only for review of general conformance with the design concept of the project and general compliance with the information given in the contract documents. This contractor is responsible for confirming and correlating all quantities and dimensions; selecting fabrication processes and techniques of construction; coordinating his work with that of all other trades; and performing his work in a safe and satisfactory manner.
FROELICH ENGINEERS, INC.
DATE: 10-16-2013 BY: KW

RECEIVED OCT 17 2013 DOCUMENT SERVICES

2 -01-co 128928 - DFS 13-16

RECEIVED
OCT 17 2013
B&S
DOCUMENT SERVICES

A *Hardy Frame*® Product

# Quick Connect Calculations

## Continuous Rod System Submittal

Date: October 15, 2013
Reference: Z4 Delta 2

Project Name: **Division Apartments**
Project Address: 4725 SE Division Street
Portland, OR

**Submittal Package:**
The following Quick Connect Calculations are provided along with the detail and elevation sheets as a deferred submittal to the tie-down system specified in the construction documents. These documents have been submitted to the Engineer of Record and bear their shop drawing stamp as an accepted specification. For evaluation reports please refer to **ICC ESR No. 2190**.

**Deferred Submittal:**
**Continuous Rod System (Zone Four Quick Connect (QC)):**

- Overturning forces are transferred from the structural sheathing to the wood posts.
- Shearwall overturning forces generate tension and compression loads at opposite ends of the shearwall.
- Compression loads accumulate in the wood posts from the top to the bottom level. If the EOR specifies the compression load Zone Four will include in the design.
- Uplift (tension loads): wood posts push up and are resisted by the bearing plates above. The tension load specified by the EOR is included as the basis of the Zone Four Design.
- Cinch Nuts (CN) transfer load from the bearing plate to continuous rod per level.
- Tension loads are accumulated in the rod
- CN provided perpetual shrinkage compensation.

# Hardy Frame - Zone Four

**250 Klug Circle, Corona, CA 92880**
Phone (800) 432-4444



**Hardy Frame-Z4 Quick Connect CNX "Continuous Tie-Down" Systems Design**

1 2 3 4 5 6 7 8 9 10 11 12 13 14 15

## TABLE 3A - ATR All-Thread Anchor Rod & Cinch Nut Capacities, Travel & Deflection

**ATR Allthread Anchor Rod ASD Capacity (lbs)** **w/ Allowable Stress Increase = 1.00**
**AISC / ASD Part 5, Rod Tensile Capacity = (0.75/2) * $F_u$ * $A_n$** **E = 2.90E+07**

| ASTM Rod Spec. | Anchor Rod Diameter (in) | | | | | | | | | | | | | |
|---|---|---|---|---|---|---|---|---|---|---|---|---|---|---|
| | 4 | 5 | 6 | 7 | 8 | 9 | 10 | 11 | 12 | 14/9 | 14/10 | 16/9 | 16/12 | |
| | 1/2 | 5/8 | 3/4 | 7/8 | 1 | 1 1/8 | 1 1/4 | 1 3/8 | 1 1/2 | 1 3/4 | 1 3/4 | 2 | 2 | $F_u$ (psi) |
| Nominal Area $A_n$ | 0.20 | 0.31 | 0.44 | 0.60 | 0.79 | 0.99 | 1.23 | 1.48 | 1.77 | 2.41 | 2.41 | 3.14 | 3.14 | |
| A36 | 4,271 | 6,673 | 9,609 | 13,079 | 17,082 | 21,620 | 26,691 | 32,296 | 38,435 | 52,315 | 52,315 | 68,330 | 68,330 | 58,000 |
| A193-B7 | 9,204 | 14,381 | 20,709 | 28,187 | 36,816 | 46,595 | 57,524 | 69,604 | 82,835 | 112,748 | 112,748 | 147,262 | 147,262 | 125,000 |
| | small | | | | 120,000 psi | | | | large | | | | 105,000 psi | 120,000 |
| A449 | 8,836 | 13,806 | 19,880 | 27,059 | 35,343 | 39,140 | 48,320 | 58,468 | 69,581 | 94,708 | 94,708 | 123,700 | 123,700 | 105,000 |
| A354-BD | 11,045 | 17,257 | 24,850 | 33,824 | 44,179 | 55,914 | 69,029 | 83,525 | 99,402 | 135,297 | 135,297 | 176,715 | 176,715 | 150,000 |
| Net Area $A_e$ | 0.142 | 0.226 | 0.334 | 0.462 | 0.606 | 0.763 | 0.969 | 1.160 | 1.410 | 1.900 | 1.900 | 2.500 | 2.500 | |
| **CODE** | **ESR-2190 CNX Cinch Nut Capacities, Travel & Defelection (includes stress increase noted above)** | | | | | | | | | | | | | |
| IBC/CBC | | **14,067** | **16,942** | **28,187** | **29,283** | **42,337** | **54,190** | **51,093** | **82,835** | **42,337** | **54,190** | **42,337** | **82,835** | |
| Deflection | **yes** | 0.0187 | 0.0224 | 0.0234 | 0.0241 | 0.0233 | 0.0287 | 0.0268 | 0.0361 | 0.0233 | 0.0287 | 0.0233 | 0.0287 | |
| AC316 Tested Travel | **yes** | 0.051 | 0.058 | 0.051 | 0.055 | 0.052 | 0.075 | 0.080 | 0.072 | 0.052 | 0.075 | 0.052 | 0.075 | |

## TABLE 3B - VERTICAL DISPLACEMENT LIMITS

| JURISDICTIONS | ELONGATION LIMITS | | Σ LIMITS |
|---|---|---|---|
| **2009 IBC/2010 CBC** | **0.200** | | **0.200** |
| **Project Specific** | | | |
| **2011 COLA/SM** | **0.200** | | **0.200** |
| **2009 TUC** | **0.125** | | **0.200** |
| **2009 IBC/SD** | **0.125** | | **0.179** |

Note: Recommend 0.150 for elongation and 0.250 for accumulated.

RECEIVED
OCT 17 2013
BOS
DOCUMENT SERVICES

RECEIVED
OCT 17 2013
DOCUMENT SERVICES

# Hardy Frame - Zone Four

250 Klug Circle, Corona, CA 92880
Phone (800) 432-4444



## Hardy Frame-Z4 Quick Connect CNX "Continuous Tie-Down" Systems Design

### TABLE 2 - Bearing Plate Washer ASD Capacities [1, 2, 3]
### DF-L No 2 min visually graded dimension lumber used for compression posts (see sht 1A)

| plate washer designation | b min. width (depth) req'd | plate washer width | plate washer length | hole on plate washer for rod | $A_{net}$ plate net area ($A_{plate}$-$A_{hole}$) | design capacity ($A_{net}$*625) | Use Capacities P | a w/ CNX capacity ≥ $P_{use}$ | plate thickness: M per inch of plate width @ hole | plate thickness: ASD stress increase 1.00 min $t_{rqd}$ | plate thickness: washer plate thickness used |
|---|---|---|---|---|---|---|---|---|---|---|---|
| | (in) | (in) | (in) | (in) | ($in^2$) | (lbs) | **(lbs)** | (in) | (in-lbs) | (in) | (in) |
| PW5 | | 3 | 3 | 1 5/16 | 7.65 | 4,779 | **4,700** | 0.998 | 306 | 0.261 | 1/4 |
| PW6 | | 3 1/4 | 3 3/8 | 1 5/16 | 9.62 | 6,010 | **6,000** | 1.185 | 438 | 0.312 | 3/8 |
| PW7 | | 3 1/4 | 3 7/8 | 1 5/16 | 11.24 | 7,025 | **7,000** | 1.435 | 641 | 0.377 | 1/2 |
| PW9 | | 3 1/4 | 5 | 1 5/16 | 14.90 | 9,311 | **9,300** | 1.998 | 1,245 | 0.526 | 5/8 |
| PW11 | 3.5 | 3 1/4 | 5 7/8 | 1 5/16 | 17.74 | 11,088 | **11,000** | 2.435 | 1,838 | 0.639 | 3/4 |
| PW15 | | 3 1/4 | 7 7/8 | 1 5/16 | 24.24 | 15,150 | **15,100** | 3.435 | 3,675 | 0.904 | 7/8 |
| PW20 | | 3 1/4 | 10 1/4 | 1 5/16 | 31.96 | 19,975 | **20,000** | 4.584 | 6,575 | 1.209 | 1 1/4 |
| PW25 | | 3 1/2 | 11 3/4 | 1 5/16 | 39.77 | 24,858 | **25,000** | 5.334 | 8,942 | 1.410 | 1 1/2 |
| PW30 | | 3 1/2 | 14 | 1 5/16 | 47.65 | 29,779 | **30,000** | 6.419 | 12,970 | 1.698 | 1 3/4 |
| PW6-36 | | 5 | 11 3/4 | 1 5/16 | 57.40 | 35,873 | **36,000** | 5.251 | 8,645 | 1.386 | 1 1/2 |
| PW6-43 | | 5 | 14 | 1 5/16 | 68.65 | 42,904 | **43,000** | 6.376 | 12,730 | 1.682 | 1 5/8 |

b = plate width  a (in) = (plate length / 2) - (1/4 CNX diam)  q (psi) = $P_{use}$ / $A_{net}$ ≤ 625

$M_{total} = q\,a^2/2$  $M / S \leq F_b$  $S = t^2 / 6$  $t_{min}$ (in) = $(6*M_{use}/F_b)^{1/2}$

$F_y$ (ksi) = 36.00  $F_b$ (ksi) = 0.75 $F_y$ = 27.00  $C_b$ (bearing area factor) = 1.00

[1] Design capacities have a load stress increase factor as shown .

[2] The design engineer shall select an All-thread/Anchor rod with a design capacity > the design force.

[3] The capacity of the concrete anchor must be equal to or greater than the design capacity of the connector being specified.

| Shrinkage Device Housing Diameters | | | |
|---|---|---|---|
| CNX | hs'g diam | ATR diam | capacity |
| 5 | 1.861 | 5/8 | 14,067 |
| 6 | 2.010 | 3/4 | 16,942 |
| 7 | 2.164 | 7/8 | 28,187 |
| 8 | 2.325 | 1 | 29,283 |
| 9 | 2.498 | 1 1/8 | 42,337 |
| 10 | 2.686 | 1 1/4 | 54,190 |
| 11 | 2.905 | 1 3/8 | 51,093 |
| 12 | 3.092 | 1 1/2 | 82,835 |

**Wood Deformation** yes

Where $f_{c\perp} \leq F_{c\perp 0.02"}$

$$\Delta = 0.02 \times (f_{c\perp}/F_{c\perp 0.02"}) \qquad \text{Eq. 1.0}$$

Where $F_{c\perp 0.02"} < f_{c\perp} < F_{c\perp 0.04"}$

$$\Delta = 0.04 - 0.02 \times ((1-f_{c\perp}/F_{c\perp 0.04"})/0.27) \qquad \text{Eq. 2.0}$$

$$(\Delta = 0 \text{ where } f_{c\perp}/F_{c\perp 0.04"} \leq 0.46)$$

**Hardy Frame - Zone Four**
250 Klug Circle, Corona, CA 92880
Phone (800) 432-4444



## Hardy Frame-Z4 Quick Connect CNX "Continuous Tie-Down" Systems Design

### TABLE 1 - Compression Design Capacities (lbs) for Wood Studs or Posts

DF-L

| | | | | | | | | | | | | | | | | | | | | | | | | | |
|---|---|---|---|---|---|---|---|---|---|---|---|---|---|---|---|---|---|---|---|---|---|---|---|---|---|
| | | $K_e$ = | 1.00 | | | c = | 0.80 | max $l_e$ / b ≤ 50 | | | | | | | | | | | | | | | | | |
| b [2] (in) | $l_e$ max (in) | | $C_D$ [3] | | t (inches), length of bolt in wood member [4] | | | | | | | | | | | | | | | | | | | | |
| | | | | Posts | 2x4 | 3x4 | 4x4 | 6x4 | 8x4 | 10x4 | 12x4 | | | | | | | | | | | | | | |
| | | | | Grade | No. 2 | No. 2 | No. 2 | No. 2 | No. 1 | No. 1 | No. 1 | | | | | | | | | | | | | | |
| | | | | t (1 post) | 1.50 | 2.50 | 3.50 | 5.50 | 7.25 | 9.25 | 11.25 | | | | | | | | | | | | | | |
| | | | | $A_g$ (in$^2$) | 5.25 | 8.75 | 12.25 | 19.25 | 25.38 | 32.38 | 39.38 | | | | | | | | | | | | | | |
| 3.5 | | $F_{c\perp}$ (psi) | 1 post | $P_{c\perp\,max}$ [1] | 3,281 | 5,469 | 7,656 | 12,031 | 15,859 | 20,234 | 24,609 | | | | | | | | | | | | | | |
| | | 625 | $C_D$=1.60 | N/A | N/A | N/A | N/A | N/A | N/A | N/A | N/A | | | | | | | | | | | | | | |
| | 50*d | $F^*_c$ (psi) | 1.00 | | 1,553 | 1,553 | 1,553 | 1,485 | 1,575 | 1,500 | 1,500 | | | | | | | | | | | | | | |
| | 175 | | $C_D$=1.60 | | 2,484 | 2,484 | 2,484 | 2,376 | 2,520 | 2,400 | 2,400 | | | | | | | | | | | | | | |
| | | | | $E_{min}$ (psi) = | 5.80E+05 | 5.80E+05 | 5.80E+05 | 5.80E+05 | 6.20E+05 | 6.20E+05 | 6.20E+05 | | | | | | | | | | | | | | |
| | | | | Posts | 2x6 | 3x6 | 4x6 | 6x6 | 8x6 | 10x6 | 12x6 | | | | | Posts | 2x8 | 3x8 | 4x8 | 6x8 | 8x8 | 10x8 | 12x8 | | |
| | | | | Grade | No. 2 | No. 2 | No. 2 | No. 1 | No. 1 | No. 1 | No. 1 | | | | | Grade | No. 2 | No. 2 | No. 2 | No. 1 | No. 1 | No. 1 | No. 1 | | |
| | | | | t (1 post) | 1.50 | 2.50 | 3.50 | 5.50 | 7.50 | 9.50 | 11.50 | | | | | t (1 post) | 1.50 | 2.50 | 3.50 | 5.50 | 7.50 | 9.50 | 11.50 | | |
| | | | | $A_g$ (in$^2$) | 8.25 | 13.75 | 19.25 | 30.25 | 41.25 | 52.25 | 63.25 | | | | | $A_g$ (in$^2$) | 11.25 | 18.75 | 26.25 | 41.25 | 56.25 | 71.25 | 86.25 | | |
| 5.5 | | $F_{c\perp}$ (psi) | 1 post | $P_{c\perp\,max}$ [1] | 5,156 | 8,594 | 12,031 | 18,906 | 25,781 | 32,656 | 39,531 | | | $F_{c\perp}$ (psi) | 1 post | $P_{c\perp\,max}$ [1] | 7,031 | 11,719 | 16,406 | 25,781 | 35,156 | 44,531 | 53,906 | | |
| | | 625 | $C_D$=1.60 | N/A | N/A | N/A | N/A | N/A | N/A | N/A | N/A | 7.5 | | 625 | $C_D$=1.60 | N/A | N/A | N/A | N/A | N/A | N/A | N/A | N/A | | |
| | 50*d | $F^*_c$ | 1.00 | | 1,485 | 1,485 | 1,418 | 1,000 | 1,000 | 1,000 | 1,000 | | 50*d | $F^*_c$ | 1.00 | | 1,485 | 1,485 | 1,418 | 1,000 | 1,000 | 1,000 | 1,000 | | |
| | 275 | | $C_D$=1.60 | | 2,376 | 2,376 | 2,268 | 1,600 | 1,600 | 1,600 | 1,600 | | 375 | | $C_D$=1.60 | | 2,376 | 2,376 | 2,268 | 1,600 | 1,600 | 1,600 | 1,600 | | |
| | | | | $E_{min}$ (psi) = | 5.80E+05 | 5.80E+05 | 5.80E+05 | 5.80E+05 | 5.80E+05 | 5.80E+05 | 5.80E+05 | | | | | $E_{min}$ (psi) = | 5.80E+05 | 5.80E+05 | 5.80E+05 | 5.80E+05 | 5.80E+05 | 5.80E+05 | 5.80E+05 | | |
| 1 | 2 | 3 | 4 | 5 | 6 | 7 | 8 | 9 | 10 | 11 | 12 | 13 | 14 | 15 | 16 | 17 | 18 | 19 | 20 | 21 | 22 | 23 | 24 | | |

### Visually Graded Dimension Lumber (used flat wise at TP & CP posts)

[1] $P_{c\perp}$ max may be multiplied by $C_b$ for bearings not nearer than 3" to the end of a member:

| t (inches) | 1.50 | 2.50 | 3.50 | 5.50 | ≥ 6.00 |
|---|---|---|---|---|---|
| $C_b$ | 1.25 | 1.15 | 1.11 | 1.07 | 1.00 |

[2] b = width (depth) of wood stud or post, unbraced dimension.
[3] $C_D$ = load duration factor
[4] t = thickness (breadth) of stud or post, braced dimension

For SI: 1 inch = 25.4 mm, 1 pound = 4.45 N

| Fire-Retardant-Treated Lumber Strength Design Factors (Douglas Fir) | |
|---|---|
| Manufacturer | |
| Comp Parallel, $F_{c\parallel}$ | 1.00 |
| Comp Perp, $F_{c\perp}$ | 1.00 |
| Tension Parallel, $F_t$ | 1.00 |
| Bending: Modulus of Elasticity, E | 1.00 |
| Fasteners / Connectors | 1.00 |

Capacity, Compressive Stress Parallel to Grain

$P_{c\,max}$ (lbs) = $C_p F_c^* A_g$ $\quad A_g$ (in$^2$) = b t

$C_p = \{[1 + (F_{cE} / F_c^*)] / 2c\} - \{[(1 + (F_{cE} / F_c^*)) / 2c]^2 - [(F_{cE} / F_c^*) / c]\}^{1/2}$

$F_{cE} = 0.822\, E_{min}' / (l_e / d)^2$ $\quad c = 0.8$

$l_e = K_e l$ $\quad K_e = 1.00$ $\quad l_e / d \leq 50$

d = b (member braced continuously on t axis, NDS, Appendix A.11.3)

### TABLE 1A - 2005 NDS DF-L Capacities

| b width (in) | Stud or Post Size | $F_c$ (psi) Stud | No. 2 | No. 1 | No. 1 & Btr | Sel. Struct. | $F_t$ (psi) Stud | No. 2 | No. 1 | No. 1 & Btr | Sel. Struct. | $C_F$ (size) $F_t$ | $F_c$ | $F_c$ 1.05 Stud | $F_c'$ (psi) for stud grade | $C_D$ = 1.60 No. 1 | No. 1 & Btr | Sel. Struct. | $F_t$ 1.10 Stud | $F_t^*$ (psi) for stud grade | $C_D$ = 1.60 No. 1 | No. 1 & Btr | Sel. Struct. |
|---|---|---|---|---|---|---|---|---|---|---|---|---|---|---|---|---|---|---|---|---|---|---|---|
| 3.5 | 2x4 | 850 | 1350 | 1500 | 1550 | 1700 | 450 | 575 | 675 | 800 | 1000 | 1.50 | 1.15 | 1,428 | 2,484 | 2,760 | 2,852 | 3,128 | 792 | 1,380 | 1,620 | 1,920 | 2,400 |
| | 3x4 | | | | | | | | | | | 1.50 | 1.15 | 1,428 | 2,484 | 2,760 | 2,852 | 3,128 | 792 | 1,380 | 1,620 | 1,920 | 2,400 |
| | 4x4 | | | | | | | | | | | 1.50 | 1.15 | | 2,484 | 2,760 | 2,852 | 3,128 | | 1,380 | 1,620 | 1,920 | 2,400 |
| | 6x4 | | | | | | | | | | | 1.30 | 1.10 | | 2,376 | 2,640 | 2,728 | 2,992 | | 1,196 | 1,404 | 1,664 | 2,080 |
| | 8x4 | | | | | | | | | | | 1.20 | 1.05 | | 2,268 | 2,520 | 2,604 | 2,856 | | 1,104 | 1,296 | 1,536 | 1,920 |
| | 10x4 | | | | | | | | | | | 1.10 | 1.00 | | 2,160 | 2,400 | 2,480 | 2,720 | | 1,012 | 1,188 | 1,408 | 1,760 |
| | 12x4 | | | | | | | | | | | 1.00 | 1.00 | | 2,160 | 2,400 | 2,480 | 2,720 | | 920 | 1,080 | 1,280 | 1,600 |
| | | | | | | | | | | | | | Emin (psi) = | 510,000 | 580,000 | 620,000 | 660,000 | 690,000 | 510,000 | 580,000 | 620,000 | 660,000 | 690,000 |
| | | | | | | | | | | | | | E (psi) = | 1.40E+06 | 1.60E+06 | 1.70E+06 | 1.80E+06 | 1.90E+06 | 1.40E+06 | 1.60E+06 | 1.70E+06 | 1.80E+06 | 1.90E+06 |
| | | | | | | | | | | | | | | 1.00 | for stud grade | | | | 1.00 | for stud grade | | | |
| 5.5 or 7.5 | 2x | 850 | | | | | 450 | | | | | 1.30 | 1.10 | 1,360 | 2,376 | 2,640 | 2,728 | 2,992 | 720 | 1,196 | 1,404 | 1,664 | 2,080 |
| | 3x | | | | | | | | | | | 1.30 | 1.10 | 1,360 | 2,376 | 2,640 | 2,728 | 2,992 | 720 | 1,196 | 1,404 | 1,664 | 2,080 |
| | 4x | | | | | | | | | | | 1.30 | 1.05 | | 2,268 | 2,520 | 2,604 | 2,856 | | 1,196 | 1,404 | 1,664 | 2,080 |
| Post/Timber | | | No. 2 | No. 1 | Dense No 1 | Sel. Struct. | | No. 2 | No. 1 | Dense No 1 | Sel. Struct. | | | | No. 2 | No. 1 | Dense No 1 | Sel. Struct. | | No. 2 | No. 1 | Dense No 1 | Sel. Struct. |
| 5.5 or 7.5 | 6x | | 700 | 1000 | 1200 | 1150 | | 475 | 825 | 950 | 1000 | 1.00 | 1.00 | | 1,120 | 1,600 | 1,920 | 1,840 | | 760 | 1,320 | 1,520 | 1,600 |
| | 8x | | | | | | | | | | | 1.00 | 1.00 | | 1,120 | 1,600 | 1,920 | 1,840 | | 760 | 1,320 | 1,520 | 1,600 |
| | 10x | | | | | | | | | | | 1.00 | 1.00 | | 1,120 | 1,600 | 1,920 | 1,840 | | 760 | 1,320 | 1,520 | 1,600 |
| | 12x | | | | | | | | | | | 1.00 | 1.00 | | 1,120 | 1,600 | 1,920 | 1,840 | | 760 | 1,320 | 1,520 | 1,600 |
| | | | | | | | | | | | | | $E_{min}$ (psi) = | | 470,000 | 580,000 | 620,000 | 580,000 | | 470,000 | 580,000 | 620,000 | 580,000 |
| | | | | | | | | | | | | | E (psi) = | | 1.30E+06 | 1.60E+06 | 1.70E+06 | 1.60E+06 | | 1.30E+06 | 1.60E+06 | 1.70E+06 | 1.60E+06 |

RECEIVED
OCT 17 2013
DOCUMENT SERVICES

# Hardy Frame - Zone Four

250 Klug Circle, Corona, CA 92880
Phone (800) 432-4444

**Hardy Frame-Z4 Quick Connect CNX "Continuous Tie-Down" Systems Design** | **Jurisdiction :** **2009 IBC/2010 CBC**

3/7/2013 G3

| | | | |
|---|---|---|---|
| Page | 2 | of | 2 |
| Rev | 2 | Proj # | |
| Date | 10/15/2013 | Designer | SHH |

**Project Name :** Division Apts

**Address :** Portland, OR

**Non-Fire Treated Lumber**

| 1 | 2 | 3 | 4 | 5 | 6 | 7 | 8 | 9 | 10 | 11 | 12 | 13 | 14 | 15 | 16 | 17 | 18 | 19 | 20 | 21 | 22 | 23 | 24 | 25 | 26 | 27 | 28 | 29 | 30 | 32 | 33 | 35 | 36 | 38 | 39 | 40 | 41 | 42 | 43 | 44 |
|---|---|---|---|---|---|---|---|---|---|---|---|---|---|---|---|---|---|---|---|---|---|---|---|---|---|---|---|---|---|---|---|---|---|---|---|---|---|---|---|---|
| | | | | T/C Uplift Loads | | | | | Hold-down, ATR & CN | | | | | | | | | | | | | | | Wood Posts @ Level Below PW Bearing Plate | | | | | | | | | | | | | | | | |
| | | | | Accumulated | | | Per Level | | | | | | | | | | | | | | | | | (Grades selected on appendices sheet 1A) | | | | | | | | | | | | | | | | |
| | | | | | | | LD | MLC | | | | | | | | | | | | | | | | | | | | | | | | | | | | | | | | |
| Level $_n$ (Floor) / Base | FF | FD | Post $l_e$ | Max demand (includes carry over from below) | Minimum Accumulated Capacity (1st Level Bridge Posts May Be Required) | System T/C Capacity Check ("+ bridge" requires separate design for posts below bridge) | Demand/Carry Over | Minimum Level Capacity | Plate Washer (Table 2) | PW Capacity (Table 2) | ATR Diam (1/8" inc) | Z (full dia, threaded ends) | ATR Capacity (Table 3A) | ATR ASTM Spec | Connection to Connection (L) | PW above @ Sill or Top Plate = 0 or Bridge = FF/2 min | Elongation Conn to Conn ($\Delta_e$=P*L/$A_e$*E) | CNX Device Travel $\Delta_R$ or Zero for Nut | Δ of Hold-down or Shrinkage Device *demand/capacity | Wood Deform @ PW ($\Delta_w$=0.04*dem/capacity) | Accumulation of Vertical Displacements | Compare Accumulated Vertical Displacements to Limit (Table 3B) | CNX Shrinkage Device Capacity (Table 3A) | d - Wall Thickness | Wood Grade (Table 1) | Accum Comp Demand to Posts Outside of Bridge Posts (Except @ Top Level) | Design Posts Below Bridge for Level Demaand | Post Capacity Check | Added Per Level Comp Demand (from EOR) | Compression Posts Left Side | Compression Posts Right Side | Additional Compression Posts | $C_p$ ($P_{CL}$ multiplier based upon post thickness) | $\Sigma P_{CL}$ Cap | $P_{CII}$ Cap Left Side Posts | $P_{CII}$ Cap Right Side Posts | $P_{CII}$ Cap Additional Posts | $\Sigma P_{CII}$ Cap |
| | | | | | | | | | | | | | | | | | Elongation limit 0.200 | yes | yes | yes | | Compare limit 0.200 | | | | | | | | | | | | | | | | | |
| | (in) | (in) | (in) | (lbs) | (lbs) | | (lbs) | (lbs) | | (lbs) | | | (lbs) | | (in) | (in) | 0.200 | (in) | (in) | (in) | (in) | 0.200 | | (in) | DF-L | (lbs) | | | (lbs) | | | | | | (lbs) | (lbs) | (lbs) | (lbs) | (lbs) |
| | Run Name: | | 5-3 | | | | | Quantity: | | | 2 | | | Notes: | Wood per Plan. 6" TYP. POST SPACING. HUNG JOIST FLOOR FRAMING. | | | | | | | | | | | | | | | | | | | | | | | | | |
| 6 | | | | 0 | 0 | | | 0 | | 0 | | | 0 | | | | | | | | | | | 3.5 | | | | | | | | | | | | | | | |
| | | | | | 0 | | 0 | 0 | | 0 | | | | | | | | | | | | | | 5.5/7.5 | | | | | | | | | | | | | | | |
| 5 | | | | 0 | 0 | | | 0 | | 0 | | | 0 | | | | | | | | | | | 3.5 | | | | | | | | | | | | | | | |
| | | | | | 0 | | 0 | 0 | | 0 | | | | | | | | | | | | | | 5.5/7.5 | | | | | | | | | | | | | | | |
| 4 | | | | 0 | 0 | | | 0 | | 0 | | | 0 | | | | | | | | | | | 3.5 | | | | | | | | | | | | | | | |
| | | | | | 0 | | 0 | 0 | | 0 | | | | | | | | | | | | | | 5.5/7.5 | | | | | | | | | | | | | | | |
| 3 | 120 | | 115.5 | 4,750 | 6000 | | 4,750 | 6,000 | PW6 | 6,000 | 5 | | 6,673 | A36 | 60 | 60 | 0.043 | 0.051 | 0.006 | 0.025 | 0.125 | OK | 14,067 | 3.5 | | | | | | | | | | | | | | | |
| | | 0 | | | 6000 | | 0 | 6,000 | PW6 | 6,000 | | | | | | | | | | 0.025 | | | | 5.5/7.5 | | | | | | | | | | | | | | | |
| 2 | 120 | | 115.5 | 10,500 | 12000 | | 5,750 | 6,000 | PW6 | 6,000 | 7 | | 13,079 | A36 | 120 | 0 | 0.094 | 0.051 | 0.005 | 0.037 | 0.186 | OK | 28,187 | 3.5 | | | | | | | | | | | | | | | |
| | | 0 | | | 12000 | | 0 | 6,000 | PW6 | 6,000 | | | | | | | | | | 0.037 | | | | 5.5/7.5 | | | | | | | | | | | | | | | |
| 1 | 144 | | 139.5 | 20,650 | 21620 | | 10,150 | 15,100 | PW15 | 15,100 | 9 | Z | 21,620 | A36 | 144 | 0 | 0.110 | 0.052 | 0.006 | 0.016 | 0.184 | OK | 42,337 | 3.5 | | | | | | | | | | | | | | | |
| conc | | | | | 21620 | | 0 | 15,100 | PW15 | 15,100 | | | | | | | | | | 0.016 | | | | 5.5/7.5 | | | | | | | | | | | | | | | |
| | Run Name: | | 7-3 | | | | | Quantity: | | | 2 | | | Notes: | Wood per Plan. 6" TYP. POST SPACING. HUNG JOIST FLOOR FRAMING. | | | | | | | | | | | | | | | | | | | | | | | | | |
| 6 | | | | 0 | 0 | | | 0 | | 0 | | | 0 | | | | | | | | | | | 3.5 | | | | | | | | | | | | | | | |
| | | | | | 0 | | 0 | 0 | | 0 | | | | | | | | | | | | | | 5.5/7.5 | | | | | | | | | | | | | | | |
| 5 | | | | 0 | 0 | | | 0 | | 0 | | | 0 | | | | | | | | | | | 3.5 | | | | | | | | | | | | | | | |
| | | | | | 0 | | 0 | 0 | | 0 | | | | | | | | | | | | | | 5.5/7.5 | | | | | | | | | | | | | | | |
| 4 | | | | 0 | 0 | | | 0 | | 0 | | | 0 | | | | | | | | | | | 3.5 | | | | | | | | | | | | | | | |
| | | | | | 0 | | 0 | 0 | | 0 | | | | | | | | | | | | | | 5.5/7.5 | | | | | | | | | | | | | | | |
| 3 | 120 | | 115.5 | 5,000 | 6000 | | 5,000 | 6,000 | PW6 | 6,000 | 5 | | 6,673 | A36 | 60 | 60 | 0.045 | 0.051 | 0.007 | 0.028 | 0.131 | OK | 14,067 | 3.5 | | | | | | | | | | | | | | | |
| | | 0 | | | 6000 | | 0 | 6,000 | PW6 | 6,000 | | | | | | | | | | 0.028 | | | | 5.5/7.5 | | | | | | | | | | | | | | | |
| 2 | 120 | | 115.5 | 10,300 | 12000 | | 5,300 | 6,000 | PW6 | 6,000 | 7 | | 13,079 | A36 | 120 | 0 | 0.092 | 0.051 | 0.004 | 0.031 | 0.178 | OK | 28,187 | 3.5 | | | | | | | | | | | | | | | |
| | | 0 | | | 12000 | | 0 | 6,000 | PW6 | 6,000 | | | | | | | | | | 0.031 | | | | 5.5/7.5 | | | | | | | | | | | | | | | |
| 1 | 144 | | 139.5 | 17,500 | 21620 | | 7,200 | 11,000 | PW11 | 11,000 | 9 | | 21,620 | A36 | 144 | 0 | 0.113 | 0.052 | 0.004 | 0.014 | 0.184 | OK | 42,337 | 3.5 | | | | | | | | | | | | | | | |
| conc | | | | | 21620 | | 0 | 11,000 | PW11 | 11,000 | | | | | | | | | | 0.014 | | | | 5.5/7.5 | | | | | | | | | | | | | | | |
| | Run Name: | | | | | | | Quantity: | | | | | | Notes: | | | | | | | | | | | | | | | | | | | | | | | | | |
| 6 | | | | 0 | c | | | 0 | | 0 | | | 0 | | | | | | | | | | | 3.5 | | | | | | | | | | | | | | | |
| | | | | | 0 | | 0 | 0 | | 0 | | | | | | | | | | | | | | 5.5/7.5 | | | | | | | | | | | | | | | |
| 5 | | | | 0 | 0 | | | 0 | | 0 | | | 0 | | | | | | | | | | | 3.5 | | | | | | | | | | | | | | | |
| | | | | | 0 | | 0 | 0 | | 0 | | | | | | | | | | | | | | 5.5/7.5 | | | | | | | | | | | | | | | |
| 4 | | | | 0 | 0 | | | 0 | | 0 | | | 0 | | | | | | | | | | | 3.5 | | | | | | | | | | | | | | | |
| | | | | | 0 | | 0 | 0 | | 0 | | | | | | | | | | | | | | 5.5/7.5 | | | | | | | | | | | | | | | |
| 3 | | | | 0 | 0 | | | 0 | | 0 | | | 0 | | | | | | | | | | | 3.5 | | | | | | | | | | | | | | | |
| | | | | | 0 | | 0 | 0 | | 0 | | | | | | | | | | | | | | 5.5/7.5 | | | | | | | | | | | | | | | |
| 2 | | | | 0 | 0 | | | 0 | | 0 | | | 0 | | | | | | | | | | | 3.5 | | | | | | | | | | | | | | | |
| | | | | | 0 | | 0 | 0 | | 0 | | | | | | | | | | | | | | 5.5/7.5 | | | | | | | | | | | | | | | |
| 1 | | | | 0 | 0 | | | 0 | | 0 | | | 0 | | 0 | | | | | | | | | 3.5 | | | | | | | | | | | | | | | |
| conc | | | | | 0 | | 0 | 0 | | 0 | | | | | | | | | | | | | | 5.5/7.5 | | | | | | | | | | | | | | | |

Capacities versus demands are considered okay if within 3% and elongations versus limits are considered okay if within 5%.

RECEIVED
OCT 17 2013
PCS
DOCUMENT SERVICES

## Hardy Frame - Zone Four

250 Klug Circle, Corona, CA 92880
Phone (800) 432-4444

**Hardy Frame-Z4 Quick Connect CNX "Continuous Tie-Down" Systems Design** | **Jurisdiction :** 2009 IBC/2010 CBC

3/7/2013 G3

| | |
|---|---|
| Page | 1 of 2 |
| Rev | 2 |
| Date | 10/15/2013 |
| Proj # | |
| Designer | SHH |

**Project Name :** Division Apts

**Address :** Portland, OR

...n-Fire Treated Lumber

REGISTERED PROFESSIONAL ENGINEER 84664PE OREGON JESSE E. KARNS

| 1 | 2 | 3 | 4 | 5 | 6 | 7 | 8 | 9 | 10 | 11 | 12 | 13 | 14 | 15 | 16 | 17 | 18 | 19 | 20 | 21 | 22 | 23 | 24 | 25 | 29 | 30 | 32 | 33 | 35 | 36 | 38 | 39 | 40 | 41 | 42 | 43 | 44 |
|---|---|---|---|---|---|---|---|---|---|---|---|---|---|---|---|---|---|---|---|---|---|---|---|---|---|---|---|---|---|---|---|---|---|---|---|---|---|
| | | | | T/C Uplift Loads | | | | | Hold-down, ATR & CN | | | | | | | | | | | | | | | | Wood Posts @ Level Below PW Bearing Plate | | | | | | | | | | | | |
| | | | | Accumulated | | | Per Level | | | | | | | | | | | | | | | | | | (Grades selected on appendices sheet 1A) | | | | | | | | | | | | |
| | | | | | | | LD | MLC | | | | | | | | | | | | | | | | | | | | | | | | | | | | | |
| Level $_n$ (Floor) / Base | FF | FD | Post $l_s$ | Max demand (includes carry over from below) | Minimum Accumulated Capacity (1st Level Bridge Posts May Be Required) | System T/C Capacity Check ("+ bridge" requires separate design for posts below bridge) | Demand/Carry Over | Minimum Level Capacity | Plate Washer (Table 2) | PW Capacity (Table 2) | ATR Diam (1/8" inc) | Z (full dia, threaded ends) | ATR Capacity (Table 3A) | ATR ASTM Spec | Connection to Connection (L) | PW above @ Sill or Top Plate = 0 or Bridge = FF/2 min | Elongation Conn to Conn ($\Delta_R$=P*L/A$_s$*E) | CNX Device Travel $\Delta_R$ or Zero for Nut | Δ of Hold-down or Shrinkage Device *demand/capacity | Wood Deform @ PW ($\Delta_w$=0.04*dem/capacity) | Accumulation of Vertical Displacements | Compare Accumulated Vertical Displacements to Limit (Table 3B) | CNX Shrinkage Device Capacity (Table 3A) | d - Wall Thickness | Wood Grade (Table 1) | Accum Comp Demand to Posts Outside of Bridge Posts (Except @ Top Level) | Design Posts Below Bridge for Level Demaand | Post Capacity Check | Added Per Level Comp Demand (from EOR) | Compression Posts Left Side | Compression Posts Right Side | Additional Compression Posts | $C_L$ ($P_{cL}$ multiplier based upon post thickness) | $\Sigma P_{cL}$ Cap | $P_{cR}$ Cap Left Side Posts | $P_{cR}$ Cap Right Side Posts | $P_{cR}$ Cap Additional Posts | $\Sigma P_{cR}$ Cap |
| | (in) | (in) | (in) | (lbs) | (lbs) | | (lbs) | (lbs) | | (lbs) | | | (lbs) | | (in) | (in) | limit 0.200 | (in) | (in) | (in) | (in) | limit 0.200 | | (in) | DF-L | (lbs) | | | (lbs) | | | | (lbs) | (lbs) | (lbs) | (lbs) | (lbs) |
| Run Name: | | | 5 | | | | | Quantity: | | | 10 | | | Notes: | Wood per Plan. 6" TYP. POST SPACING. HUNG JOIST FLOOR FRAMING. | | | | | | | | | | | | | | | | | | | | | | | | |
| 6 | | | | 0 | 0 | | | 0 | | 0 | | | 0 | | | | | | | | | | | 3.5 | | | | | | | | | | | | | |
| | | | | | 0 | | 0 | 0 | | 0 | | | | | | | | | | | | | | 5.5/7.5 | | | | | | | | | | | | | |
| 5 | | | | 0 | 0 | | | 0 | | 0 | | | 0 | | | | | | | | | | | 3.5 | | | | | | | | | | | | | |
| | | | | | 0 | | 0 | 0 | | 0 | | | | | | | | | | | | | | 5.5/7.5 | | | | | | | | | | | | | |
| 4 | 120 | | 115.5 | 1,500 | 4700 | | 1,500 | 4,700 | PW5 | 4,700 | 5 | | 6,673 | A36 | 60 | 60 | 0.013 | 0.051 | 0.002 | 0.000 | 0.066 | OK | 14,067 | 3.5 | | | | | | | | | | | | | |
| | | 0 | | | 4700 | | 0 | 4,700 | PW5 | 4,700 | | | | | | | | | | 0.000 | | | | 5.5/7.5 | | | | | | | | | | | | | |
| 3 | 120 | | 115.5 | 4,750 | 6673 | | 3,250 | 4,700 | PW5 | 4,700 | 5 | | 6,673 | A36 | 120 | 0 | 0.086 | 0.051 | 0.004 | 0.017 | 0.159 | OK | 14,067 | 3.5 | | | | | | | | | | | | | |
| | | 0 | | | 6673 | | 0 | 4,700 | PW5 | 4,700 | | | | | | | | | | 0.017 | | | | 5.5/7.5 | | | | | | | | | | | | | |
| 2 | 120 | | 115.5 | 10,500 | 13079 | | 5,750 | 6,000 | PW6 | 6,000 | 7 | | 13,079 | A36 | 120 | 0 | 0.094 | 0.051 | 0.005 | 0.037 | 0.186 | OK | 28,187 | 3.5 | | | | | | | | | | | | | |
| | | 0 | | | 13079 | | 0 | 6,000 | PW6 | 6,000 | | | | | | | | | | 0.037 | | | | 5.5/7.5 | | | | | | | | | | | | | |
| 1 | 144 | | 139.5 | 20,650 | 21620 | | 10,150 | 15,100 | PW15 | 15,100 | 9 | Z | 21,620 | A36 | 144 | 0 | 0.110 | 0.052 | 0.006 | 0.016 | 0.184 | OK | 42,337 | 3.5 | | | | | | | | | | | | | |
| conc | | | | | 21620 | | 0 | 15,100 | PW15 | 15,100 | | | | | | | | | | 0.016 | | | | 5.5/7.5 | | | | | | | | | | | | | |
| Run Name: | | | 7 | | | | | Quantity: | | | 6 | | | Notes: | Wood per Plan. 6" TYP. POST SPACING. HUNG JOIST FLOOR FRAMING. | | | | | | | | | | | | | | | | | | | | | | | | |
| 6 | | | | 0 | 0 | | | 0 | | 0 | | | 0 | | | | | | | | | | | 3.5 | | | | | | | | | | | | | |
| | | | | | 0 | | 0 | 0 | | 0 | | | | | | | | | | | | | | 5.5/7.5 | | | | | | | | | | | | | |
| 5 | | | | 0 | 0 | | | 0 | | 0 | | | 0 | | | | | | | | | | | 3.5 | | | | | | | | | | | | | |
| | | | | | 0 | | 0 | 0 | | 0 | | | | | | | | | | | | | | 5.5/7.5 | | | | | | | | | | | | | |
| 4 | 120 | | 115.5 | 2,000 | 4700 | | 2,000 | 4,700 | PW5 | 4,700 | 5 | | 6,673 | A36 | 60 | 60 | 0.018 | 0.051 | 0.003 | 0.000 | 0.072 | OK | 14,067 | 3.5 | | | | | | | | | | | | | |
| | | 0 | | | 4700 | | 0 | 4,700 | PW5 | 4,700 | | | | | | | | | | 0.000 | | | | 5.5/7.5 | | | | | | | | | | | | | |
| 3 | 120 | | 115.5 | 5,000 | 6673 | | 3,000 | 4,700 | PW5 | 4,700 | 5 | | 6,673 | A36 | 120 | 0 | 0.091 | 0.051 | 0.004 | 0.013 | 0.160 | OK | 14,067 | 3.5 | | | | | | | | | | | | | |
| | | 0 | | | 6673 | | 0 | 4,700 | PW5 | 4,700 | | | | | | | | | | 0.013 | | | | 5.5/7.5 | | | | | | | | | | | | | |
| 2 | 120 | | 115.5 | 10,300 | 13079 | | 5,300 | 6,000 | PW6 | 6,000 | 7 | | 13,079 | A36 | 120 | 0 | 0.092 | 0.051 | 0.004 | 0.031 | 0.178 | OK | 28,187 | 3.5 | | | | | | | | | | | | | |
| | | 0 | | | 13079 | | 0 | 6,000 | PW6 | 6,000 | | | | | | | | | | 0.031 | | | | 5.5/7.5 | | | | | | | | | | | | | |
| 1 | 144 | | 139.5 | 17,500 | 21620 | | 7,200 | 11,000 | PW11 | 11,000 | 9 | | 21,620 | A36 | 144 | 0 | 0.113 | 0.052 | 0.004 | 0.014 | 0.184 | OK | 42,337 | 3.5 | | | | | | | | | | | | | |
| conc | | | | | 21620 | | 0 | 11,000 | PW11 | 11,000 | | | | | | | | | | 0.014 | | | | 5.5/7.5 | | | | | | | | | | | | | |
| Run Name: | | | 6 | | | | | Quantity: | | | 12 | | | Notes: | Wood per Plan. 6" TYP. POST SPACING. HUNG JOIST FLOOR FRAMING. | | | | | | | | | | | | | | | | | | | | | | | | |
| 6 | | | | 0 | c | | | 0 | | 0 | | | 0 | | | | | | | | | | | 3.5 | | | | | | | | | | | | | |
| | | | | | 0 | | 0 | 0 | | 0 | | | | | | | | | | | | | | 5.5/7.5 | | | | | | | | | | | | | |
| 5 | | | | 0 | 0 | | | 0 | | 0 | | | 0 | | | | | | | | | | | 3.5 | | | | | | | | | | | | | |
| | | | | | 0 | | 0 | 0 | | 0 | | | | | | | | | | | | | | 5.5/7.5 | | | | | | | | | | | | | |
| 4 | | | | 0 | 0 | | | 0 | | 0 | | | 0 | | | | | | | | | | | 3.5 | | | | | | | | | | | | | |
| | | | | | 0 | | 0 | 0 | | 0 | | | | | | | | | | | | | | 5.5/7.5 | | | | | | | | | | | | | |
| 3 | 120 | | 115.5 | 3,250 | 4700 | | 3,250 | 4,700 | PW5 | 4,700 | 5 | | 6,673 | A36 | 60 | 60 | 0.029 | 0.051 | 0.004 | 0.017 | 0.102 | OK | 14,067 | 3.5 | | | | | | | | | | | | | |
| | | 0 | | | 4700 | | 0 | 4,700 | PW5 | 4,700 | | | | | | | | | | 0.017 | | | | 5.5/7.5 | | | | | | | | | | | | | |
| 2 | 120 | | 115.5 | 8,750 | 9609 | | 5,500 | 7,000 | PW7 | 7,000 | 6 | | 9,609 | A36 | 120 | 0 | 0.108 | 0.058 | 0.007 | 0.024 | 0.197 | OK | 16,942 | 3.5 | | | | | | | | | | | | | |
| | | 0 | | | 9609 | | 0 | 7,000 | PW7 | 7,000 | | | | | | | | | | 0.024 | | | | 5.5/7.5 | | | | | | | | | | | | | |
| 1 | 144 | | 139.5 | 16,500 | 17082 | | 7,750 | 11,000 | PW11 | 11,000 | 8 | Z | 17,082 | A36 | 144 | 0 | 0.112 | 0.055 | 0.006 | 0.018 | 0.191 | OK | 29,283 | 3.5 | | | | | | | | | | | | | |
| conc | | | | | 17082 | | 0 | 11,000 | PW11 | 11,000 | | | | | | | | | | 0.018 | | | | 5.5/7.5 | | | | | | | | | | | | | |

Capacities versus demands are considered okay if within 3% and elongations versus limits are considered okay if within 5%.

RECEIVED OCT 17 2013 BCS DOCUMENT SERVICES

BDS
DOCUMENT SERVICES

A *Hardy Frame*® Product

# Quick Connect Submittal Package

To: **Ryan Goodin**
G & W Builders

Mobile:
Phone: (360) 772-6322
Fax:
Email: ryan@gandwbuilders.com

From: **Steven Helton**
Zone Four
250 Klug Circle
Corona, CA 92880
Mobile:
Phone: (951) 245-9525
Fax: (951) 245-9653
Email: shelton@mii.com

Date: October 15, 2013
Reference: Z4 Delta 2

Subject: **Division Apartments**

Deliverables: (3) Sets of stamped calculations showing the design of the QC system that meets or exceeds project demand with corresponding QC run names.

(6) Sets of stamped elevations & details showing parts and installation configurations.

(6) Sets of placement plans showing the locations of the QC runs where different from those originally specified on the plans. If the QC run names are identical to the run names specified on the plans a placement plan is not required.

Jurisdiction: **City of Portland**

Framer: **G & W Builders (360) 772-6322**
Please review submittal package as part of your coordination with the construction documents and comment as necessary. Inform General Contractor of your receipt of the documents and forward to them for their use & approval. Prior to Zone Four submitting to the city we will need a copy of the front page and the structural sheets of the permitted set of construction documents along with the information required to pull permit on behalf of the Owner or Contractor (see below).

General Contractor:

Please review submittal package as part of your coordination with the construction documents and comment as necessary. Inform Engineer of Record of your receipt of the documents and forward to them for their use & approval. Prior to Zone Four submitting to the city we will need a copy of the front page and the structural sheets of the permitted set of construction documents along with the information required to pull permit on behalf of the Owner or Contractor (see below). Please provide plan checkers name, phone number, and plan check number.

RECEIVED
OCT 17 2013
DOCUMENT SERVICES

A *Hardy Frame*® Product

Engineer of Record: **Froelich Engineers (503) 624-7005**
Please review submittal package as part of your coordination with the construction documents and comment as necessary. During your review if you should have any questions please call Steven Helton (951) 245-9525. Please provide your shop drawing stamp on all of the sheets provided, including the calculation package. Keep a copy for your records. Inform Architect of your receipt of the documents and forward to them for their use & approval. If the Architect doesn't require review please call Zone Four and we will pick up and process through the local jurisdiction.

Architect: **Sera Architects (503) 445-7372**
Please review submittal package as part of your coordination with the construction documents and comment as necessary. Once your review is complete please call Zone Four and we will pick up and process through the local jurisdiction.

Owner/Contractor Permit Information:
When required by a local jurisdiction the permit process requires a notarized authorization letter from either the owner or registered contractor authorizing Zone Four to pull a permit for the project along with a copy of the owner or contractor's City Business Tax License, a copy of owner or contractor's valid contractor's license, and copy owners or contractor's Worker's Compensation Certificate addressed to the State of OR Contractor's Board.

Thank you for using Zone Four and please let us know if we can facilitate this process further.

Sincerely,

Steven Helton.

# Submittal Response Letter

SERA

ARCHITECTURE
URBAN DESIGN + PLANNING
INTERIOR DESIGN

1

| | |
|---|---|
| **Date** | 09/05/2013 |
| **Project Name** | Division Street Lofts |
| **Project Number** | 1202028 |

| | |
|---|---|
| **Attention** | Jerry Clark |
| **Company** | Union Corner Construction |
| **Address** | 6500A NE St Johns Rd<br>Vancouver, WA 98661 |
| **Phone** | (360) 695-1034 |
| **Email** | jerry@unioncorner.com |

SUBMITTAL REVIEW

☐ NO EXCEPTIONS NOTED ☐ DISAPPROVED
☒ NO EXCEPTIONS NOTED IN CORRECTED COPY
☐ REVISE AND RESUBMIT ☐ NOT REVIEWED

Transmitted by Architect to their consultant for primary review by Consultant. Review by Architect, if any, is solely for aesthetic intent. Consultant review is for general conformance with design concept and general compliance with information given in the Contract Documents.

REVIEWED BY

DATE 9/5/2013

SERA

## ROUGH CARPENTRY – HOLDOWNS

**Submittal** 06 10 00-1
Holdown Shop Drawings
(Revised Response)

**Revision** 0

**The following comments refer to the submittal listed above. They supplement all comments made within the submittal itself.**

**Remarks**

- See attached submittal for comments from the Structural Engineer.
- Contractor is to coordinate dimensional locations of holdowns with wood framing prior to installation.
- Note tolerances for locating holdowns are tight. Locations of holdowns and framing directly impact installations of unit exhaust vent hoods. 3' clearance is required from an exhaust opening to an operable window. See structural detail 52/S703 for additional information.

ADDITIONAL COMMENTS:
Please provide the following submittal information:

- Product data per specification requirements.

VOID:
Save for Reference Only

13-128928-DFS-01-00

**Sender** Joshua Lupkin
**CC** File

**DIVISION STREET LOFTS, LLC**
**Gaither & Sons Construction**

6500A NE St. Johns Road
Vancouver, WA 98661-1230
Ph:360-695-1034

# *Submittal*

Job: 13-09 Division Apartments

**Spec Section No: 061000**
**Submittal No: 1**
**Revision No: 1**
**Sent Date: 08-28-13**

**Spec Section Title: Rough Carpentry**
**Submittal Title:** Continuous Rod Holdown System

**Contractor:**
Union Corner Construction, Inc.

SHOP DRAWING REVIEW
Contractor's review is for general conformance with the design concept and contract documents. Markings or comments shall not be construed as relieving the Sub Contractor from compliance with the project plans and specifications, nor departures therefrom. The Sub Contractor remains responsible for details and accuracy, for confirming and correcting all quantities and dimensions, for selecting fabrication processes, for techniques of assembly, and for performing his work in a safe manner.
UNION CORNER CONSTRUCTION INC.
By [illegible] Date 8-28-13

Contractor's Stamp

Architect's Stamp

Engineer's Stamp

☐ REVIEWED ☐ REVISE AND RESUBMIT
☐ REJECTED ■ FURNISH AS CORRECTED
Corrections or comments made on the shop drawings during this review do not relieve contractor from compliance with requirements of the drawings and specifications. This check is only for review of general conformance with the design concept of the project and general compliance with the information given in the contract documents. This contractor is responsible for confirming and correlating all quantities and dimensions; selecting fabrication processes and techniques of construction; coordinating his work with that of all other trades; and performing his work in a safe and satisfactory manner.
FROELICH ENGINEERS, INC.
DATE: 09-05-2013 BY: [illegible]

See green comments within document.

VOID:
Save for Reference Only

A *Hardy Frame*® Product

# Quick Connect Submittal Package


To: **Ryan Goodin**
G & W Builders

Mobile:
Phone: (360) 772-6322
Fax:
Email: ryan@gandwbuilders.com

From: **Steven Helton**
Zone Four
250 Klug Circle
Corona, CA 92880
Mobile:
Phone: (951) 245-9525
Fax: (951) 245-9653
Email: shelton@mii.com


Date: August 26, 2013

Subject: **Division Apartments**

Deliverables: (3) Sets of stamped calculations showing the design of the QC system that meets or exceeds project demand with corresponding QC run names.

(6) Sets of stamped elevations & details showing parts and installation configurations.

If required: (6) Sets of placement plans showing the locations of the QC runs where different from those originally specified on the plans. If the QC run names are identical to the run names specified on the plans a placement plan is not required.

Jurisdiction: **City of Portland**

Framer: **ABC Framing (000) 000-0000**
Please review submittal package as part of your coordination with the construction documents and comment as necessary. Inform General Contractor of your receipt of the documents and forward to them for their use & approval. Prior to Zone Four submitting to the city we will need a copy of the front page and the structural sheets of the permitted set of construction documents along with the information required to pull permit on behalf of the Owner or Contractor (see below).

General Contractor: Please review submittal package as part of your coordination with the construction documents and comment as necessary. Inform Engineer of Record of your receipt of the documents and forward to them for their use & approval. Prior to Zone Four submitting to the city we will need a copy of the front page and the structural sheets of the permitted set of construction documents along with the information required to pull permit on behalf of the Owner or Contractor (see below). Please provide plan checkers name, phone number, and plan check number.

VOID: Save for Reference Only

A *Hardy Frame*® Product

Engineer of Record: **Froelich Engineers (503) 624-7005**
Please review submittal package as part of your coordination with the construction documents and comment as necessary. During your review if you should have any questions please call Steven Helton (951) 245-9525. Please provide your shop drawing stamp on all of the sheets provided, including the calculation package. Keep a copy for your records. Inform Architect of your receipt of the documents and forward to them for their use & approval. If the Architect doesn't require review please call Zone Four and we will pick up and process through the local jurisdiction.

Architect: **Sera Architects (503) 445-7372**
Please review submittal package as part of your coordination with the construction documents and comment as necessary. Once your review is complete please call Zone Four and we will pick up and process through the local jurisdiction.

Owner/Contractor Permit Information:
When required by a local jurisdiction the permit process requires a notarized authorization letter from either the owner or registered contractor authorizing Zone Four to pull a permit for the project along with a copy of the owner or contractor's City Business Tax License, a copy of owner or contractor's valid contractor's license, and copy owners or contractor's Worker's Compensation Certificate addressed to the State of OR Contractor's Board.

Thank you for using Zone Four and please let us know if we can facilitate this process further.

Sincerely,

Steven Helton.

VOID:
Save for Reference Only

General Note: Cut applicable details on Sheet Z4-01 on Sheet Z4-02 run elevations.

It is not clear if detail 15 is applicable. Contractor to verify and cut all applicable details on run elevations Sheet Z4-02.

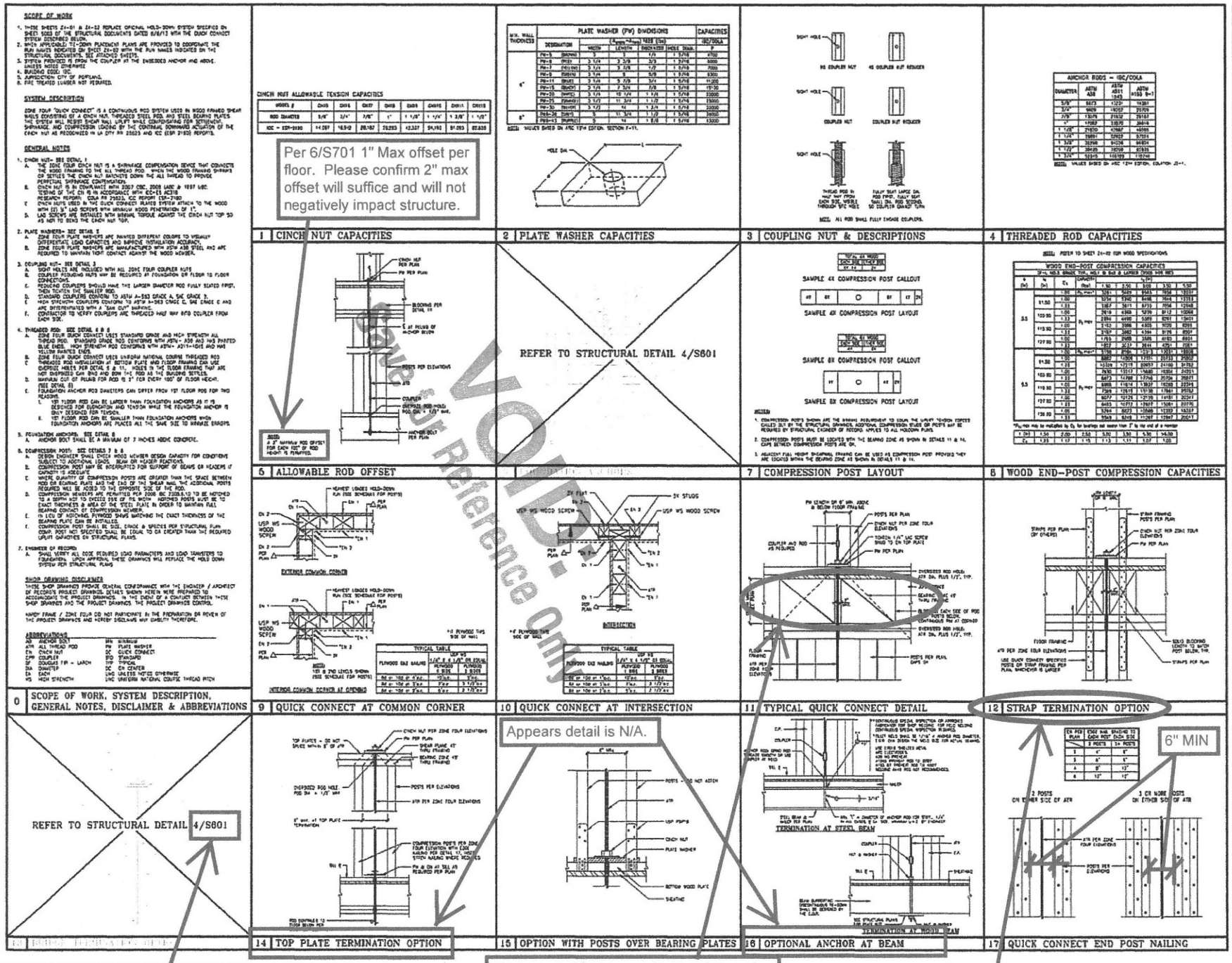


Per 6/S701 1" Max offset per floor. Please confirm 2" max offset will suffice and will not negatively impact structure.

Appears detail is N/A.

It appears this is not the correct detail reference. Please provide a detail for mid-wall height run termination (@ run termination header) and cut the detail on the run elevations.

Please note blocking each side of the rod below the floor sheathing is not possible as modified balloon framing is utilized. Please revise as necessary.

6" MIN

Appears detail 12 is not applicable. Contractor to confirm and remove or cross out all non applicable details.

HARDY FRAME

DIVISION APARTMENTS
4725 SE DIVISION STREET, PORTLAND, OR 97206
QUICK CONNECT SUBMITTAL

QUICK CONNECT TYPICAL DETAILS (IBC)

Project
Sheet Title
Scale NOT TO SCALE
File Name TYPICAL
Project No.
Issue Date 8/26/13
Designed
Drawn
Checked
Sheet No. Z4-01

Contractor to verify.

| LVL | ACCUMULATIVE LOAD DEMAND | ACCUMULATIVE LOAD CAPACITY | LOAD PER LEVEL DEMAND | LOAD PER LEVEL CAPACITY |
|---|---|---|---|---|
| - | - | - | - | - |
| 4 | 1500 | 4700 | 1500 | 4700 |
| 3 | 4750 | 6673 | 3250 | 4700 |
| 2 | 10500 | 13079 | 5750 | 6000 |
| 1 | 20650 | 21620 | 10150 | 15100 |

| LVL | ACCUMULATIVE LOAD DEMAND | ACCUMULATIVE LOAD CAPACITY | LOAD PER LEVEL DEMAND | LOAD PER LEVEL CAPACITY |
|---|---|---|---|---|
| - | - | - | - | - |
| 4 | 2000 | 4700 | 2000 | 4700 |
| 3 | 5000 | 6673 | 3000 | 4700 |
| 2 | 10300 | 13079 | 5300 | 6000 |
| 1 | 17500 | 17082 | 7200 | 11000 |

| LVL | ACCUMULATIVE LOAD DEMAND | ACCUMULATIVE LOAD CAPACITY | LOAD PER LEVEL DEMAND | LOAD PER LEVEL CAPACITY |
|---|---|---|---|---|
| - | - | - | - | - |
| 4 | | | | |
| 3 | 3250 | 4700 | 3250 | 4700 |
| 2 | 8750 | 9609 | 5500 | 7000 |
| 1 | 16500 | 17082 | 7750 | 11000 |

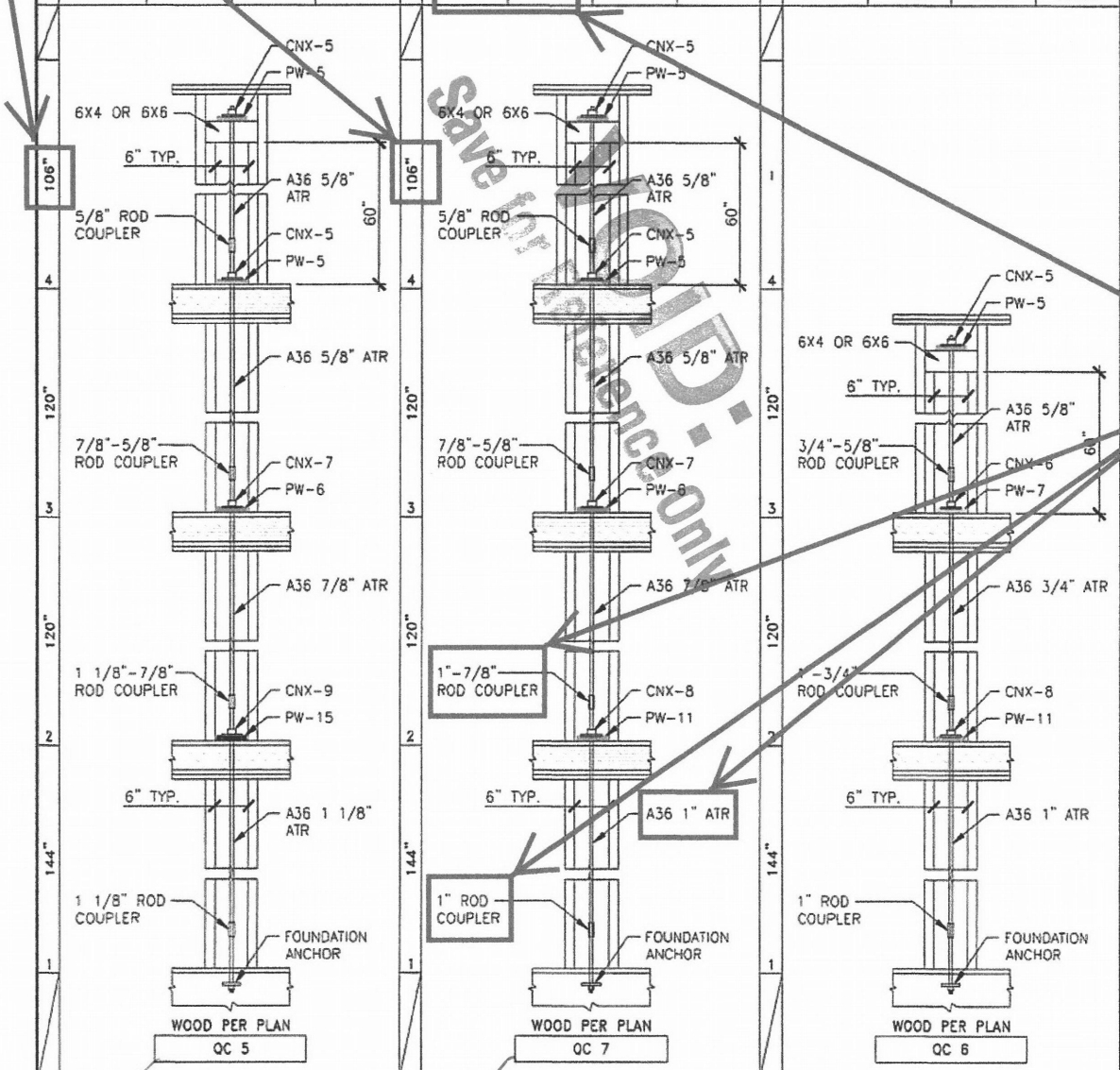


Contractor to verify quantities for each run.

Cut all applicable details from Sheet Z4-01 on Run Elevations 5, 6 & 7.

Capacity is less than demand. Please upsize so capacity is greater than demand.

NOTE:

| WOOD SPEC. PER S003 | | |
|---|---|---|
| 2X4 | = | DF-L #2 |
| 3X4 | = | DF-L #2 |
| 2X6 | = | DF-L #2 |
| 4X4 & 4X6 | = | DF-L #1 |
| 6X6 OR LARGER | = | DF-L #1 |

**CNX INSTALLATION**

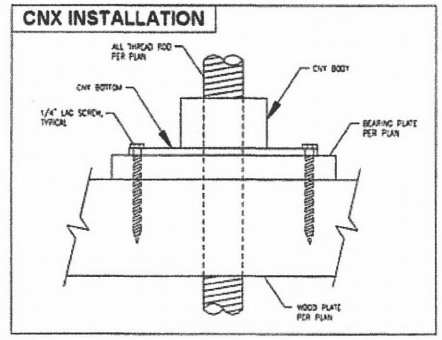


1 TYPICAL RUN ELEVATIONS

Save for Reference Only

only 3 levels @ A/11

only 3 levels @ D/8

3 levels top - 4th level no reqmts

HARDY FRAME

DIVISION APARTMENTS
4725 SE DIVISION STREET, PORTLAND, OR 97206
QUICK CONNECT SUBMITTAL

QUICK CONNECT ELEVATIONS

Project
Sheet title
Scale NOT TO SCALE
File name TYPICAL
Project No.
Issue Date 8/26/13
Designed
Drawn
Checked
Sheet No. Z4-02
Sheet of Sheets

A *Hardy Frame*® Product

# Quick Connect Calculations

## Continuous Rod System Submittal

Date: August 26, 2013

Project Name: **Division Apartments**
Project Address: 4725 SE Division Street
Portland, OR

**Submittal Package:**
The following Quick Connect Calculations are provided along with the detail and elevation sheets as a deferred submittal to the tie-down system specified in the construction documents. These documents have been submitted to the Engineer of Record and bear their shop drawing stamp as an accepted specification. For evaluation reports please refer to **ICC ESR No. 2190**.

**Deferred Submittal:**
**Continuous Rod System (Zone Four Quick Connect (QC)):**

- Overturning forces are transferred from the structural sheathing to the wood posts.
- Shearwall overturning forces generate tension and compression loads at opposite ends of the shearwall.
- Compression loads accumulate in the wood posts from the top to the bottom level. If the EOR specifies the compression load Zone Four will include in the design.
- Uplift (tension loads): wood posts push up and are resisted by the bearing plates above. The tension load specified by the EOR is included as the basis of the Zone Four Design.
- Cinch Nuts (CN) transfer load from the bearing plate to continuous rod per level.
- Tension loads are accumulated in the rod
- CN provided perpetual shrinkage compensation.

VOID:
Save for Reference Only

It appears calculations for run termination headers have not been provided. Please provide and document calculations for run termination headers indicated on Z4-02.

**Hardy Frame - Zone Four**

250 Klug Circle, Corona, CA 92880
Phone (800) 432-4444

Hardy Frame-Z4 Quick Connect CNX "Continuous Tie-Down" Systems Design | Jurisdiction : 2009 IBC/2010 CBC

3/7/2013 G3

Page 1 of 1 | Rev | Date 7.22.13 | Project | Designer RL

Project Name : Division Apts

Address : Portland, OR

n-Fire Treated Lumber

REGISTERED PROFESSIONAL ENGINEER 94664PE OREGON JESSE E. KARNS

| 1 | 2 | 3 | 4 | 5 | 6 | 7 | 8 | 9 | 10 | 11 | 12 | 13 | 14 | 15 | 16 | 17 | 18 | 19 | 20 | 21 | 22 | 23 | 24 | 25 | 26 | 27 | 28 | 29 | 30 | 32 | 33 | 35 | 36 | 38 | 39 | 40 | 41 | 42 | 43 | 44 |
|---|---|---|---|---|---|---|---|---|---|---|---|---|---|---|---|---|---|---|---|---|---|---|---|---|---|---|---|---|---|---|---|---|---|---|---|---|---|---|---|---|
| | | | | T/C Uplift Loads | | | | | | | | | | Hold-down, ATR & CN | | | | | | | | | | | | | | | | | | | | | | Wood Posts @ Level Below PW Bearing Plate | | | | | | |
| | | | | Accumulated | | | Per Level | | | | | | | | | | | | | | | | | | | | | | | | | | | | | (Grades selected on appendices sheet 1A) | | | | | | |
| | FF | FD | Post $L_p$ | | | | LD | MLC | | | | | | | | | | | | | | | | | | | | | | | | | | | | | | | | |
| Level $_n$ (Floor) / Base | Floor to Floor or Top Plate @ Roof | Floor Depth (or pits > 4.5") | $FF_n - FD_{n+1} < 4.5$ | Max demand (includes carry over from below) | Minimum Accumulated Capacity (1st Level Bridge Posts May Be Required) | System T/C Capacity Check ("+ bridge" requires separate design for posts below bridge) | Demand/Carry Over | Minimum Level Capacity | Plate Washer (Table 2) | PW Capacity (Table 2) | ATR Diam (1/8" inc) | Z (full dia, threaded ends) | ATR Capacity (Table 3A) | ATR ASTM Spec | Connection to Connection (L) | PW above @ Sill or Top Plate = 0 or Bridge = FF/2 min | Elongation Conn to Conn ($\Delta_e = P*L/A_e*E$) limit | CNX Device Travel $\Delta_d$ or Zero for Rod | Δ of Hold-down or Shrinkage Device *demand/capacity | Wood Deform @ PW ($\Delta_w$=0.04"dem/capacity) | Accumulation of Vertical Displacements | Compare Accumulated Vertical Displacements to Limit (Table 3B) limit | CNX Shrinkage Device Capacity (Table 3A) | d - Wall Thickness | Wood Grade (Table 1) | Accum Comp Demand to Posts Outside of Bridge Posts (Except @ Top Level) | Design Posts Below Bridge for Level Demand | Post Capacity Check | Added Per Level Comp Demand (from EOR) | Compression Posts Left Side | Compression Posts Right Side | Additional Compression Posts | $C_p$ ($P_{cL}$ multiplier based upon post thickness) | $\Sigma P_{cL}$ Cap | $P_{cL}$ Cap Left Side Posts | $P_{cR}$ Cap Right Side Posts | $P_{cA}$ Cap Additional Posts | $\Sigma P_{cA}$ Cap |
| | (in) | (in) | (in) | (lbs) | (lbs) | | (lbs) | (lbs) | | (lbs) | | | (lbs) | | (in) | (in) | 0.200 | (in) | (in) | (in) | (in) | 0.200 | | (in) | DF-L | (lbs) | | | | (lbs) | | | | | | (lbs) | (lbs) | (lbs) | (lbs) | (lbs) |
| Run Name: | | | 5 | | | | | Quantity: | | | | | 10 | Notes: | Wood per Plan. 6" TYP. POST SPACING. | | | | | | | | | | | | | | | | | | | | | | | | | | |
| 6 | | | | 0 | 0 | | | 0 | 0 | 0 | | | 0 | | | | | | | | | | | 3.5 | | | | | | | | | | | | | | | | |
| | | | | | 0 | | 0 | | 0 | | | | | | | | | | | | | | | 5.5/7.5 | | | | | | | | | | | | | | | | |
| 5 | | | | 0 | 0 | | | 0 | 0 | 0 | | | 0 | | | | | | | | | | | 3.5 | | | | | | | | | | | | | | | | |
| | | | | | 0 | | 0 | | 0 | | | | | | | | | | | | | | | 5.5/7.5 | | | | | | | | | | | | | | | | |
| 4 | 108 | | 101.5 | 1,500 | 4700 | | 1,500 | 4,700 | PW5 | 4,700 | 5 | | 6,673 | A36 | 60 | 60 | 0.013 | 0.051 | 0.002 | 0.000 | 0.065 | OK | 14,067 | 3.5 | | | | | | | | | | | | | | | | |
| | | 12 | | | 4700 | | 0 | 4,700 | PW5 | 4,700 | | | | | | | | | | 0.000 | | | | 5.5/7.5 | | | | | | | | | | | | | | | | |
| 3 | 120 | | 103.5 | 4,750 | 6673 | | 3,250 | 4,700 | PW5 | 4,700 | 5 | | 6,673 | A36 | 120 | 0 | 0.006 | 0.051 | 0.004 | 0.017 | 0.159 | OK | 14,067 | 3.5 | | | | | | | | | | | | | | | | |
| | | 12 | | | 6673 | | 0 | 4,700 | PW5 | 4,700 | | | | | | | | | | 0.017 | | | | 5.5/7.5 | | | | | | | | | | | | | | | | |
| 2 | 120 | | 103.5 | 10,500 | 13079 | | 5,750 | 6,000 | PW6 | 6,000 | 7 | | 13,079 | A36 | 120 | 0 | 0.004 | 0.051 | 0.005 | 0.037 | 0.199 | OK | 28,187 | 3.5 | | | | | | | | | | | | | | | | |
| | | 12 | | | 13079 | | 0 | 6,000 | PW6 | 6,000 | | | | | | | | | | 0.037 | | | | 5.5/7.5 | | | | | | | | | | | | | | | | |
| 1 | 144 | | 127.5 | 20,650 | 21620 | | 10,150 | 15,100 | PW15 | 15,100 | 9 | Z | 21,620 | A36 | 144 | 0 | 0.110 | 0.052 | 0.006 | 0.016 | 0.184 | OK | 42,337 | 3.5 | | | | | | | | | | | | | | | | |
| conc | | | | | 21620 | | 0 | 15,100 | PW15 | 15,100 | | | | | | | | | | 0.016 | | | | 5.5/7.5 | | | | | | | | | | | | | | | | |
| Run Name: | | | 7 | | | | | Quantity: | | | | | 6 | Notes: | Wood per Plan. 6" TYP. POST SPACING. | | | | | | | | | | | | | | | | | | | | | | | | | | |
| 6 | | | | 0 | 0 | | | 0 | 0 | 0 | | | 0 | | | | | | | | | | | 3.5 | | | | | | | | | | | | | | | | |
| | | | | | 0 | | 0 | | 0 | | | | | | | | | | | | | | | 5.5/7.5 | | | | | | | | | | | | | | | | |
| 5 | | | | 0 | 0 | | | 0 | 0 | 0 | | | 0 | | | | | | | | | | | 3.5 | | | | | | | | | | | | | | | | |
| | | | | | 0 | | 0 | | 0 | | | | | | | | | | | | | | | 5.5/7.5 | | | | | | | | | | | | | | | | |
| 4 | 108 | | 101.5 | 2,000 | 4700 | | 2,000 | 4,700 | PW5 | 4,700 | 5 | | 6,673 | A36 | 60 | 60 | 0.018 | 0.051 | 0.003 | 0.000 | 0.072 | OK | 14,067 | 3.5 | | | | | | | | | | | | | | | | |
| | | 12 | | | 4700 | | 0 | 4,700 | PW5 | 4,700 | | | | | | | | | | 0.000 | | | | 5.5/7.5 | | | | | | | | | | | | | | | | |
| 3 | 120 | | 103.5 | 5,000 | 6673 | | 3,000 | 4,700 | PW5 | 4,700 | 5 | | 6,673 | A36 | 120 | 0 | 0.001 | 0.051 | 0.004 | 0.013 | 0.160 | OK | 14,067 | 3.5 | | | | | | | | | | | | | | | | |
| | | 12 | | | 6673 | | 0 | 4,700 | PW5 | 4,700 | | | | | | | | | | 0.013 | | | | 5.5/7.5 | | | | | | | | | | | | | | | | |
| 2 | 120 | | 103.5 | 10,300 | 13079 | | 5,300 | 6,000 | PW6 | 6,000 | 7 | | 13,079 | A36 | 120 | 0 | 0.002 | 0.051 | 0.004 | 0.031 | 0.178 | OK | 28,187 | 3.5 | | | | | | | | | | | | | | | | |
| | | 12 | | | 13079 | | 0 | 6,000 | PW6 | 6,000 | | | | | | | | | | 0.031 | | | | 5.5/7.5 | | | | | | | | | | | | | | | | |
| 1 | 144 | | 127.5 | 17,500 | 17082 | | 7,200 | 11,000 | PW11 | 11,000 | 8 | Z | 17,082 | A36 | 144 | 0 | 0.119 | 0.055 | 0.006 | 0.014 | 0.193 | OK | 29,283 | 3.5 | | | | | | | | | | | | | | | | |
| conc | | | | | 17082 | | 0 | 11,000 | PW11 | 11,000 | | | | | | | | | | 0.014 | | | | 5.5/7.5 | | | | | | | | | | | | | | | | |
| Run Name: | | | 6 | | | | | Quantity: | | | | | 12 | Notes: | Wood per Plan. 6" TYP. POST SPACING. | | | | | | | | | | | | | | | | | | | | | | | | | | |
| 6 | | | | 0 | 0 | | | 0 | 0 | 0 | | | 0 | | | | | | | | | | | 3.5 | | | | | | | | | | | | | | | | |
| | | | | | 0 | | 0 | | 0 | | | | | | | | | | | | | | | 5.5/7.5 | | | | | | | | | | | | | | | | |
| 5 | | | | 0 | 0 | | | 0 | 0 | 0 | | | 0 | | | | | | | | | | | 3.5 | | | | | | | | | | | | | | | | |
| | | | | | 0 | | 0 | | 0 | | | | | | | | | | | | | | | 5.5/7.5 | | | | | | | | | | | | | | | | |
| 4 | | | | 0 | 0 | | | 0 | 0 | 0 | | | 0 | | | | | | | | | | | 3.5 | | | | | | | | | | | | | | | | |
| | | | | | 0 | | 0 | | 0 | | | | | | | | | | | | | | | 5.5/7.5 | | | | | | | | | | | | | | | | |
| 3 | 120 | | 115.5 | 3,250 | 4700 | | 3,250 | 4,700 | PW5 | 4,700 | 5 | | 6,673 | A36 | 60 | 60 | 0.029 | 0.051 | 0.004 | 0.017 | 0.102 | OK | 14,067 | 3.5 | | | | | | | | | | | | | | | | |
| | | 12 | | | 4700 | | 0 | 4,700 | PW5 | 4,700 | | | | | | | | | | 0.017 | | | | 5.5/7.5 | | | | | | | | | | | | | | | | |
| 2 | 120 | | 103.5 | 8,750 | 9609 | | 5,500 | 7,000 | PW7 | 7,000 | 6 | | 9,609 | A36 | 120 | 0 | 0.108 | 0.058 | 0.007 | 0.024 | 0.197 | OK | 16,942 | 3.5 | | | | | | | | | | | | | | | | |
| | | 12 | | | 9609 | | 0 | 7,000 | PW7 | 7,000 | | | | | | | | | | 0.024 | | | | 5.5/7.5 | | | | | | | | | | | | | | | | |
| 1 | 144 | | 127.5 | 16,500 | 17082 | | 7,750 | 11,000 | PW11 | 11,000 | 8 | Z | 17,082 | A36 | 144 | 0 | 0.112 | 0.055 | 0.006 | 0.016 | 0.191 | OK | 29,283 | 3.5 | | | | | | | | | | | | | | | | |
| conc | | | | | 17082 | | 0 | 11,000 | PW11 | 11,000 | | | | | | | | | | 0.016 | | | | 5.5/7.5 | | | | | | | | | | | | | | | | |

Capacities versus demands are considered okay if within 3% and elongations versus limits are considered okay if within 5%.

SAMPLE
VOID:
for Reference Only

**Hardy Frame - Zone Four**
280 Klug Circle, Corona, CA 92880
Phone (800) 432-4444



VOID:
Save for Reference Only

## Hardy Frame-Z4 Quick Connect CNX "Continuous Tie-Down" Systems Design

### TABLE 1 - Compression Design Capacities (lbs) for Wood Studs or Posts

DF-L

| | | | | | | | | | | | |
|---|---|---|---|---|---|---|---|---|---|---|---|
| | | $K_e$ = | 1.00 | | | c = | 0.80 | max $l_e$ / b ≤ 50 | | | |
| b[2] (in) | $l_e$ max (in) | | $C_D$[3] | | t (inches), length of bolt in wood member[4] | | | | | | |
| 3.5 | | | | Posts | 2x4 | 3x4 | 4x4 | 6x4 | 8x4 | 10x4 | 12x4 |
| | | | | Grade | No. 2 | No. 2 | No. 2 | No. 2 | No. 1 | No. 1 | No. 1 |
| | | | | t (1 post) | 1.50 | 2.50 | 3.50 | 5.50 | 7.25 | 9.25 | 11.25 |
| | | | | $A_g$ (in²) | 5.25 | 8.75 | 12.25 | 19.25 | 25.38 | 32.38 | 39.38 |
| | | $F_{c\perp}$ (psi) | 1 post | $P_{c\perp max}$[1] | 3,281 | 5,469 | 7,656 | 12,031 | 15,859 | 20,234 | 24,609 |
| | | 625 | $C_D$=1.60 | N/A | N/A | N/A | N/A | N/A | N/A | N/A | N/A |
| | 50*d | $F^*_c$ (psi) | 1.00 | | 1,553 | 1,553 | 1,553 | 1,485 | 1,575 | 1,500 | 1,500 |
| | 175 | | $C_D$=1.60 | | 2,484 | 2,484 | 2,484 | 2,376 | 2,520 | 2,400 | 2,400 |
| | | | | $E_{min}$ (psi) = | 5.80E+05 | 5.80E+05 | 5.80E+05 | 5.80E+05 | 6.20E+05 | 6.20E+05 | 6.20E+05 |
| 5.5 | | | | Posts | 2x6 | 3x6 | 4x6 | 6x6 | 8x6 | 10x6 | 12x6 |
| | | | | Grade | No. 2 | No. 2 | No. 2 | No. 1 | No. 1 | No. 1 | No. 1 |
| | | | | t (1 post) | 1.50 | 2.50 | 3.50 | 5.50 | 7.50 | 9.50 | 11.50 |
| | | | | $A_g$ (in²) | 8.25 | 13.75 | 19.25 | 30.25 | 41.25 | 52.25 | 63.25 |
| | | $F_{c\perp}$ (psi) | 1 post | $P_{c\perp max}$[1] | 5,156 | 8,594 | 12,031 | 18,906 | 25,781 | 32,656 | 39,531 |
| | | 625 | $C_D$=1.60 | N/A | N/A | N/A | N/A | N/A | N/A | N/A | N/A |
| | 50*d | $F^*_c$ | 1.00 | | 1,485 | 1,485 | 1,418 | 1,000 | 1,000 | 1,000 | 1,000 |
| | 275 | | $C_D$=1.60 | | 2,376 | 2,376 | 2,268 | 1,600 | 1,600 | 1,600 | 1,600 |
| | | | | $E_{min}$ (psi) = | 5.80E+05 | 5.80E+05 | 5.80E+05 | 5.80E+05 | 5.80E+05 | 5.80E+05 | 5.80E+05 |
| 1 | 2 | 3 | 4 | 5 | 6 | 7 | 8 | 9 | 10 | 11 | 12 |

[1] $P_{c\perp}$ max may be multiplied by $C_b$ for bearings not nearer than 3" to the end of a member:

| t (inches) | 1.50 | 2.50 | 3.50 | 5.50 | ≥ 6.00 |
|---|---|---|---|---|---|
| $C_b$ | 1.25 | 1.15 | 1.11 | 1.07 | 1.00 |

[2] b = width (depth) of wood stud or post, unbraced dimension.
[3] $C_D$ = load duration factor
[4] t = thickness (breadth) of stud or post, braced dimension

For SI: 1 inch = 25.4 mm, 1 pound = 4.45 N

### Visually Graded Dimension Lumber (used flat wise at TP & CP posts)

### Fire-Retardant-Treated Lumber Strength Design Factors (Douglas Fir)

| Manufacturer | |
|---|---|
| Comp Parallel, $F_{c\parallel}$ | 1.00 |
| Comp Perp, $F_{c\perp}$ | 1.00 |
| Tension Parallel, $F_t$ | 1.00 |
| Bending: Modulus of Elasticity, E | 1.00 |
| Fasteners / Connectors | 1.00 |

### Capacity, Compressive Stress Parallel to Grain

$P_{c\,max}$ (lbs) = $C_p F_c^* A_g$  $A_g$ (in²) = b t

$C_p = \{[1 + (F_{cE} / F_c^*)] / 2c\} - \{[(1 + (F_{cE} / F_c^*)) / 2c]^2 - [(F_{cE} / F_c^*) / c]\}^{1/2}$

$F_{cE} = 0.822\, E_{min}' / (l_e / d)^2$  c = 0.8

$l_e = K_e l$  $K_e$ = 1.00  $l_e / d \leq 50$

d = b (member braced continuously on t axis, NDS, Appendix A.11.3)

| | | | | | | | | | | | | | | | | | | | | | | | |
|---|---|---|---|---|---|---|---|---|---|---|---|---|---|---|---|---|---|---|---|---|---|---|---|
| | | | | | | | | | | | | | | | | Posts | 2x8 | 3x8 | 4x8 | 6x8 | 8x8 | 10x8 | 12x8 |
| | | | | | | | | | | | | | | | | Grade | No. 2 | No. 2 | No. 2 | No. 1 | No. 1 | No. 1 | No. 1 |
| | | | | | | | | | | | | | | | | t (1 post) | 1.50 | 2.50 | 3.50 | 5.50 | 7.50 | 9.50 | 11.50 |
| | | | | | | | | | | | | | | | | $A_g$ (in²) | 11.25 | 18.75 | 26.25 | 41.25 | 56.25 | 71.25 | 86.25 |
| | | | | | | | | | | | | | | $F_{c\perp}$ (psi) | 1 post | $P_{c\perp max}$[1] | 7,031 | 11,719 | 16,406 | 25,781 | 35,156 | 44,531 | 53,906 |
| | | | | | | | | | | | | | | 625 | $C_D$=1.60 | N/A | N/A | N/A | N/A | N/A | N/A | N/A | N/A |
| | | | | | | | | | | | | 50*d | $F^*_c$ | 1.00 | | 1,485 | 1,485 | 1,418 | 1,000 | 1,000 | 1,000 | 1,000 |
| | | | | | | | | | | | | 375 | | $C_D$=1.60 | | 2,376 | 2,376 | 2,268 | 1,600 | 1,600 | 1,600 | 1,600 |
| | | | | | | | | | | | | | | | $E_{min}$ (psi) = | 5.80E+05 | 5.80E+05 | 5.80E+05 | 5.80E+05 | 5.80E+05 | 5.80E+05 | 5.80E+05 |
| 13 | 14 | 15 | 16 | 17 | 18 | 19 | 20 | 21 | 22 | 23 | 24 | | | | | | | | | | | | |

### TABLE 1A - 2005 NDS DF-L Capacities

| b width (in) | Stud or Post Size | $F_c$ (psi) Stud | No. 2 | No. 1 | No. 1 & Btr | Sel. Struct. | $F_t$ (psi) Stud | No. 2 | No. 1 | No. 1 & Btr | Sel. Struct. | $C_F$ (size) $F_t$ | $F_c$ | $F_c$ 1.05 Stud | $F_c'$ (psi) for stud grade | $C_D$ = 1.60 No. 1 | No. 1 & Btr | Sel. Struct. | $F_t$ 1.10 Stud | $F_t'$ (psi) for stud grade | $C_D$ = 1.60 No. 1 | No. 1 & Btr | Sel. Struct. |
|---|---|---|---|---|---|---|---|---|---|---|---|---|---|---|---|---|---|---|---|---|---|---|---|
| 3.5 | 2x4 | 850 | | | | | 450 | | | | | 1.50 | 1.15 | 1,428 | 2,484 | 2,760 | 2,852 | 3,128 | 792 | 1,380 | 1,620 | 1,920 | 2,400 |
| | 3x4 | | | | | | | | | | | 1.50 | 1.15 | 1,428 | 2,484 | 2,760 | 2,852 | 3,128 | 792 | 1,380 | 1,620 | 1,920 | 2,400 |
| | 4x4 | | | | | | | | | | | 1.50 | 1.15 | | 2,484 | 2,760 | 2,852 | 3,128 | | 1,380 | 1,620 | 1,920 | 2,400 |
| | 6x4 | | | | | | | | | | | 1.30 | 1.10 | | 2,376 | 2,640 | 2,728 | 2,992 | | 1,196 | 1,404 | 1,664 | 2,080 |
| | 8x4 | | | | | | | | | | | 1.20 | 1.05 | | 2,268 | 2,520 | 2,604 | 2,856 | | 1,104 | 1,296 | 1,536 | 1,920 |
| | 10x4 | | | | | | | | | | | 1.10 | 1.00 | | 2,160 | 2,400 | 2,480 | 2,720 | | 1,012 | 1,188 | 1,408 | 1,760 |
| | 12x4 | | 1350 | 1500 | 1550 | 1700 | | 575 | 675 | 800 | 1000 | 1.00 | 1.00 | | 2,160 | 2,400 | 2,480 | 2,720 | | 920 | 1,080 | 1,280 | 1,600 |
| | | | | | | | | | | | | | Emin (psi) = | 510,000 | 580,000 | 620,000 | 660,000 | 690,000 | 510,000 | 580,000 | 620,000 | 660,000 | 690,000 |
| | | | | | | | | | | | | | E (psi) = | 1.40E+06 | 1.60E+06 | 1.70E+06 | 1.80E+06 | 1.90E+06 | 1.40E+06 | 1.60E+06 | 1.70E+06 | 1.80E+06 | 1.90E+06 |
| | | | | | | | | | | | | | | 1.00 | for stud grade | | | | 1.00 | for stud grade | | | |
| 5.5 or 7.5 | 2x | 850 | | | | | 450 | | | | | 1.30 | 1.10 | 1,360 | 2,376 | 2,640 | 2,728 | 2,992 | 720 | 1,196 | 1,404 | 1,664 | 2,080 |
| | 3x | | | | | | | | | | | 1.30 | 1.10 | 1,360 | 2,376 | 2,640 | 2,728 | 2,992 | 720 | 1,196 | 1,404 | 1,664 | 2,080 |
| | 4x | | | | | | | | | | | 1.30 | 1.05 | | 2,268 | 2,520 | 2,604 | 2,856 | | 1,196 | 1,404 | 1,664 | 2,080 |
| Post/Timber | | | No. 2 | No. 1 | Dense No 1 | Sel. Struct. | | No. 2 | No. 1 | Dense No 1 | Sel. Struct. | | | | No. 2 | No. 1 | Dense No 1 | Sel. Struct. | | No. 2 | No. 1 | Dense No 1 | Sel. Struct. |
| 5.5 or 7.5 | 6x | | 700 | 1000 | 1200 | 1150 | | 475 | 825 | 950 | 1000 | 1.00 | 1.00 | | 1,120 | 1,600 | 1,920 | 1,840 | | 760 | 1,320 | 1,520 | 1,600 |
| | 8x | | | | | | | | | | | 1.00 | 1.00 | | 1,120 | 1,600 | 1,920 | 1,840 | | 760 | 1,320 | 1,520 | 1,600 |
| | 10x | | | | | | | | | | | 1.00 | 1.00 | | 1,120 | 1,600 | 1,920 | 1,840 | | 760 | 1,320 | 1,520 | 1,600 |
| | 12x | | | | | | | | | | | 1.00 | 1.00 | | 1,120 | 1,600 | 1,920 | 1,840 | | 760 | 1,320 | 1,520 | 1,600 |
| | | | | | | | | | | | | | $E_{min}$ (psi) = | | 470,000 | 580,000 | 620,000 | 580,000 | | 470,000 | 580,000 | 620,000 | 580,000 |
| | | | | | | | | | | | | | E (psi) = | | 1.30E+06 | 1.60E+06 | 1.70E+06 | 1.60E+06 | | 1.30E+06 | 1.60E+06 | 1.70E+06 | 1.60E+06 |

**Hardy Frame-Z4 Quick Connect CNX "Continuous Tie-Down" Systems Design**

## TABLE 2 - Bearing Plate Washer ASD Capacities [1, 2, 3]
## DF-L No 2 min visually graded dimension lumber used for compression posts (see sht 1A)

| plate washer designation | b min. width (depth) req'd | plate washer width | plate washer length | hole on plate washer for rod | $A_{net}$ plate net area ($A_{plate}$-$A_{hole}$) | design capacity ($A_{net}$*625) | Use Capacities P | a w/ CNX capacity ≥ $P_{use}$ | plate thickness: M per inch of plate width @ hole | plate thickness: ASD stress increase 1.00 min $t_{rqd}$ | plate thickness: washer plate thickness used |
|---|---|---|---|---|---|---|---|---|---|---|---|
| | (in) | (in) | (in) | (in) | ($in^2$) | (lbs) | (lbs) | (in) | (in-lbs) | (in) | (in) |
| PW5 | | 3 | 3 | 1 5/16 | 7.65 | 4,779 | 4,700 | 0.998 | 306 | 0.261 | 1/4 |
| PW6 | | 3 1/4 | 3 3/8 | 1 5/16 | 9.62 | 6,010 | 6,000 | 1.185 | 438 | 0.312 | 3/8 |
| PW7 | | 3 1/4 | 3 7/8 | 1 5/16 | 11.24 | 7,025 | 7,000 | 1.435 | 641 | 0.377 | 1/2 |
| PW9 | | 3 1/4 | 5 | 1 5/16 | 14.90 | 9,311 | 9,300 | 1.998 | 1,245 | 0.526 | 5/8 |
| PW11 | 3.5 | 3 1/4 | 5 7/8 | 1 5/16 | 17.74 | 11,088 | 11,000 | 2.435 | 1,838 | 0.639 | 3/4 |
| PW15 | | 3 1/4 | 7 7/8 | 1 5/16 | 24.24 | 15,150 | 15,100 | 3.435 | 3,675 | 0.904 | 7/8 |
| PW20 | | 3 1/4 | 10 1/4 | 1 5/16 | 31.96 | 19,975 | 20,000 | 4.584 | 6,575 | 1.209 | 1 1/4 |
| PW25 | | 3 1/2 | 11 3/4 | 1 5/16 | 39.77 | 24,858 | 25,000 | 5.334 | 8,942 | 1.410 | 1 1/2 |
| PW30 | | 3 1/2 | 14 | 1 5/16 | 47.65 | 29,779 | 30,000 | 6.419 | 12,970 | 1.698 | 1 3/4 |
| PW6-36 | | 5 | 11 3/4 | 1 5/16 | 57.40 | 35,873 | 36,000 | 5.251 | 8,645 | 1.386 | 1 1/2 |
| PW6-43 | | 5 | 14 | 1 5/16 | 68.65 | 42,904 | 43,000 | 6.376 | 12,730 | 1.682 | 1 5/8 |

b = plate width  a (in) = (plate length / 2) - (1/4 CNX diam)  q (psi) = $P_{use}$ / $A_{net}$ ≤ 625

$M_{total} = q\,a^2/2$  $M / S \le F_b$  $S = t^2 / 6$  $t_{min}$ (in) = $(6*M_{use}/F_b)^{1/2}$

$F_y$ (ksi) = 36.00  $F_b$ (ksi) = 0.75 $F_y$ = 27.00  $C_b$ (bearing area factor) = 1.00

[1] Design capacities have a load stress increase factor as shown .

[2] The design engineer shall select an All-thread/Anchor rod with a design capacity > the design force.

[3] The capacity of the concrete anchor must be equal to or greater than the design capacity of the connector being specified.

| Shrinkage Device Housing Diameters | | | |
|---|---|---|---|
| CNX | hs'g diam | ATR diam | capacity |
| 5 | 1.861 | 5/8 | 14,067 |
| 6 | 2.010 | 3/4 | 16,942 |
| 7 | 2.164 | 7/8 | 28,187 |
| 8 | 2.325 | 1 | 29,283 |
| 9 | 2.498 | 1 1/8 | 42,337 |
| 10 | 2.686 | 1 1/4 | 54,190 |
| 11 | 2.905 | 1 3/8 | 51,093 |
| 12 | 3.092 | 1 1/2 | 82,835 |


VOID:
Save for Reference Only


**Wood Deformation** yes

Where $f_{c\perp} \le F_{c\perp 0.02"}$

$$\Delta = 0.02 \times (f_{c\perp}/F_{c\perp 0.02"}) \qquad \text{Eq. 1.0}$$

Where $F_{c\perp 0.02"} < f_{c\perp} < F_{c\perp 0.04"}$

$$\Delta = 0.04 - 0.02 \times ((1-f_{c\perp}/F_{c\perp 0.04"})/0.27) \qquad \text{Eq. 2.0}$$

$(\Delta = 0$ where $f_{c\perp}/F_{c\perp 0.04"} \le 0.46)$

Save for Reference Only

**Hardy Frame - Zone Four**
250 Klug Circle, Corona, CA 92880
Phone (800) 432-4444



## Hardy Frame-Z4 Quick Connect CNX "Continuous Tie-Down" Systems Design

1 2 3 4 5 6 7 8 9 10 11 12 13 14 15

### TABLE 3A - ATR All-Thread Anchor Rod & Cinch Nut Capacities, Travel & Deflection

ATR Allthread Anchor Rod ASD Capacity (lbs) w/ Allowable Stress Increase = 1.00
AISC / ASD Part 5, Rod Tensile Capacity = $(0.75/2) * F_u * A_n$ E = 2.90E+07

| ASTM Rod Spec. | Anchor Rod Diameter (in) | | | | | | | | | | | | | |
|---|---|---|---|---|---|---|---|---|---|---|---|---|---|---|
| | 4 | 5 | 6 | 7 | 8 | 9 | 10 | 11 | 12 | 14/9 | 14/10 | 16/9 | 16/12 | |
| | 1/2 | 5/8 | 3/4 | 7/8 | 1 | 1 1/8 | 1 1/4 | 1 3/8 | 1 1/2 | 1 3/4 | 1 3/4 | 2 | 2 | $F_u$ (psi) |
| Nominal Area $A_n$ | 0.20 | 0.31 | 0.44 | 0.60 | 0.79 | 0.99 | 1.23 | 1.48 | 1.77 | 2.41 | 2.41 | 3.14 | 3.14 | |
| A36 | 4,271 | 6,673 | 9,609 | 13,079 | 17,082 | 21,620 | 26,691 | 32,296 | 38,435 | 52,315 | 52,315 | 68,330 | 68,330 | 58,000 |
| A193-B7 | 9,204 | 14,381 | 20,709 | 28,187 | 36,816 | 46,595 | 57,524 | 69,604 | 82,835 | 112,748 | 112,748 | 147,262 | 147,262 | 125,000 |
| | small | | | | 120,000 psi | large | | | | | | | 105,000 psi | 120,000 |
| A449 | 8,836 | 13,806 | 19,880 | 27,059 | 35,343 | 39,140 | 48,320 | 58,468 | 69,581 | 94,708 | 94,708 | 123,700 | 123,700 | 105,000 |
| A354-BD | 11,045 | 17,257 | 24,850 | 33,824 | 44,179 | 55,914 | 69,029 | 83,525 | 99,402 | 135,297 | 135,297 | 176,715 | 176,715 | 150,000 |
| Net Area $A_e$ | 0.142 | 0.226 | 0.334 | 0.462 | 0.606 | 0.763 | 0.969 | 1.160 | 1.410 | 1.900 | 1.900 | 2.500 | 2.500 | |
| **CODE** | **ESR-2190 CNX Cinch Nut Capacities, Travel & Defelection (includes stress increase noted above)** | | | | | | | | | | | | | |
| IBC/CBC | | **14,067** | **16,942** | **28,187** | **29,283** | **42,337** | **54,190** | **51,093** | **82,835** | **42,337** | **54,190** | **42,337** | **82,835** | |
| Deflection | yes | 0.0187 | 0.0224 | 0.0234 | 0.0241 | 0.0233 | 0.0287 | 0.0268 | 0.0361 | 0.0233 | 0.0287 | 0.0233 | 0.0287 | |
| AC316 Tested Travel | yes | 0.051 | 0.058 | 0.051 | 0.055 | 0.052 | 0.075 | 0.080 | 0.072 | 0.052 | 0.075 | 0.052 | 0.075 | |

### TABLE 3B - VERTICAL DISPLACEMENT LIMITS

| JURISDICTIONS | ELONGATION LIMITS | | Σ LIMITS |
|---|---|---|---|
| 2009 IBC/2010 CBC | 0.200 | | 0.200 |
| Project Specific | | | |
| 2011 COLA/SM | 0.200 | | 0.200 |
| 2009 TUC | 0.125 | | 0.200 |
| 2009 IBC/SD | 0.125 | | 0.179 |

Note: Recommend 0.150 for elongation and 0.250 for accumulated.

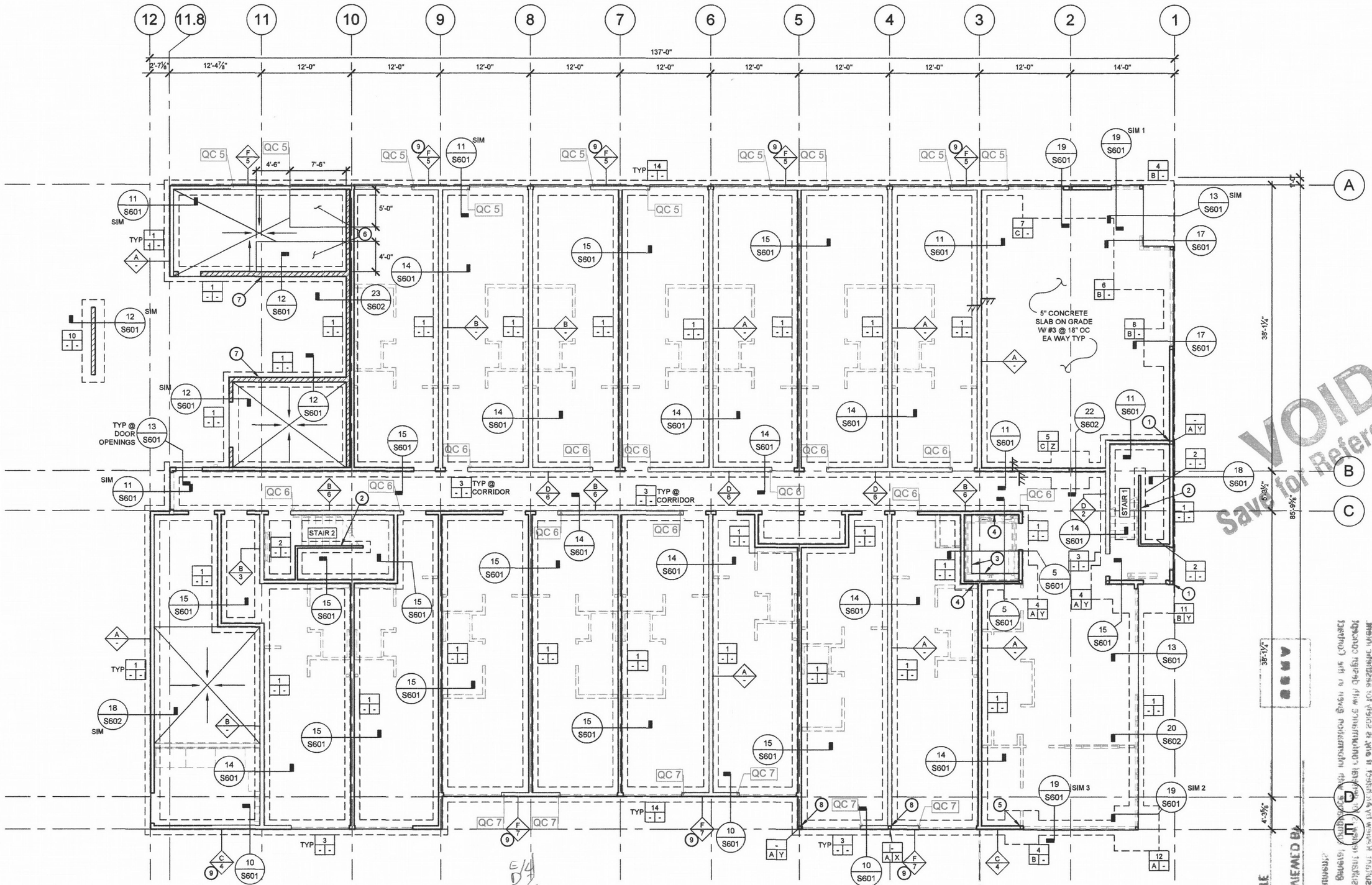


VOID: Save for Reference Only

3 stories
not 4

51000