SYMBOLS

- FINISHED WOOD
- DIMENSION LUMBER
- FACE BRICK
- RIGID INSULATION
- CUT STONE
- CONCRETE
- CONCRETE BLOCK
- STEEL IN SECTION
- CAULKING
- PLYWOOD
- BATT INSULATION
- GROUT
- GLAZED TILE
- MARBLE
- ACOUSTICAL CEILING
- SHIM PACK
- ALUMINUM

DENOTES BLOCKING OR SHIM NOT CONTINUOUS NOT NECESSARILY ONE PIECE

DENOTES BACKER ROD OR CAULK ROPE

ANCHOR LOCATION

FASTENER LOCATION

DIMENSIONAL REFERENCE / ELEVATION

WORKING POINT

FIELD APPLIED SEALANT BY GLAZING SUB CONTRACTOR

BRAKE METAL SPLICE

SHOP DRILL

FIELD DRILL

1 GL-1 GLAZING INDICATORS

2 / 401 — DETAIL NUMBER / SHEET NUMBER

1 DETAIL TITLE — 1 A400 / 2 A400 — SERIES — scale — ARCHITECTURAL REFERENCE SHEET NO — ARCHITECTURAL REFERENCE DETAIL NO

A ELEVATION / 301 — 1/2" = 1'-0" — ELEVATION/PLAN/SECTION TITLE

1 REVISION NO (SMALL TRIANGLE)

101 DOOR NUMBER

A / 401 — ELEVATION LOCATION VIEW POINT — ELEVATION MARK/TITLE — ELEVATION SHEET NUMBER

MATERIALS AVAILABLE WHEN DRAWN

YES	NO	MATERIAL	LATEST ISSUE
X		ARCHITECTURAL DRAWINGS	05/03/10
X		STRUCTURAL DRAWINGS	05/03/10
	X	ADDENDUMS	
X		SPECIFICATIONS	
08411		ALUMINUM-FRAMED ENTRANCES AND STOREFRONTS	NOTES
08520		ALUMINUM WINDOWS	
08710		DOOR HARDWARE	
08800		GLAZING	
08911		GLAZED ALUMINUM CURTAIN WALLS	

PRODUCTS USED

PRODUCT DESCRIPTION

PRODUCT	WIDTH	DEPTH
KAWNEER 451T CG SF	2"	4 1/2
KAWNEER 1600 SYSTEM 1 CW	2 1/2"	7 1/2"
KAWNEER D500 WIDE STILE DOOR	VARIES	1 3/4
KAWNEER 8225TL CASEMENT OUT WINDOW	3 1/2"	2 1/4
KAWNEER 8225TL PROJECT OUT WINDOW	3 1/2"	2 1/4

HARDWARE SCHEDULE

SEE SHEET 102

City of Portland Bureau of Development Services Approved by Planning & Zoning Review Date By

SETTING BLOCKS

MEASURED FROM C BLOCK TO GLASS EDGE

1/4 PTS	12"	8"	NOTES FOR BLOCKS AT NONSTANDARD LOCATIONS
			U N O ON ELEVATION

ABBREVIATIONS

A/C	=	ACCESS CONTROLLED
A F F	=	ABOVE FINISHED FLOOR
B O H	=	BOTTOM OF HORIZONTAL
℄	=	CENTER LINE
DIM	=	DIMENSION
D L O	=	DAYLIGHT OPENING
D L	=	DEAD LOAD (ANCHOR)
D O	=	DOOR OPENING
EL	=	ELEVATION
E O G	=	EDGE OF GLASS
F.S	=	FRAME SIZE
F F	=	FINISHED FLOOR
G C	=	GENERAL CONTRACTOR
M O	=	MASONRY OPENING
M L	=	MULLION LENGTH
N B C	=	NOT BY CAPITOL CITY GLASS
N I C	=	NOT IN CONTRACT
N T S	=	NOT TO SCALE
O D	=	OPENING DIMENSION
O F D	=	OVERALL FRAME DIMENSION
REF	=	REFERENCE
R O	=	ROUGH OPENING
T O F F	=	TOP OF FINISHED FLOOR
T O H	=	TOP OF HORIZONTAL
T O S	=	TOP OF SLAB
T O STL	=	TOP OF STEEL
U N O	=	UNLESS NOTED OTHERWISE
V I F	=	VERIFY IN FIELD
W C	=	WEB CENTER
W D	=	WINDOW DIMENSION
W L	=	WIND LOAD (ANCHOR)
W P	=	WORKING POINT

INFILL SCHEDULE

GLAZING CONTRACTOR TO VERIFY CORRECT INSULATED GLASS MAKE UP AND CORRECT LOCATIONS ON ALL ELEVATIONS PRIOR TO ORDERING

SYMBOL	DESCRIPTION
A	1 00" INSULATED UNIT EXTERIOR 1/4" SB 60 #2 ANNEALED AIR SPACE 1/2" INTERIOR 1/4" CLEAR ANNEALED
B	1 00" INSULATED UNIT EXTERIOR 1/4" SB 60 #2 TEMPERED AIR SPACE 1/2" INTERIOR 1/4" CLEAR TEMPERED

DESIGN CRITERIA

WINDLOADS		ALLOWABLE DEFLECTION
CODE/STANDARD	2006 IBC AS AMENDED BY STATE OF OREGON	L<13 6 =L/175 L>13-6 =L/240 + 1/4"
WIND SPEED (MPH)	100	
IMPORTANCE FACTOR	1 15	
EXPOSURE CATEGORY	B	
MEAN ROOF HEIGHT	33 FT	
		NOTES
DESIGN PRESSURE (P F)		
TYPICAL WALL	21 1	
CORNER ZONES	25 9	
SNOW LOAD (PSF)	N/A	

PORTLAND FIRE & RESCUE STATION 31

ALUMINUM ENTRANCES, STOREFRONTS, CURTAIN WALL, & WINDOW SHOP DRAWINGS

GLASS SIZE CALCULATION

REFERENCE MANUFACTURERS INSTALLATION INSTRUCTIONS

PRODUCT	D L O +	COMMENTS
KAWNEER 451T CG SF	3/4	3/8" GLASS BITE
KAWNEER 1600 SYSTEM 1 CW	1	1/2" GLASS BITE
KAWNEER 500 WIDE STILE DOOR		BY KAWNEER
KAWNEER 8225TL CASEMENT OUT WINDOW		BY KAWNEER
KAWNEER 8225TL PROJECT OUT WINDOW		BY KAWNEER

FINISH SCHEDULE

PRODUCT	FINISH	NOTES
ALL MATERIAL	CLEAR ANODIZED #14	

FIELD VERIFY ALL DIMENSIONS

GENERAL NOTES

1. LTS DRAFTING & ENGINEERING WILL ASSUME NO RESPONSIBILITY FOR ERRORS RESULTING FROM THE USE OF THESE DRAWINGS BY OTHER TRADES
2. THESE DRAWINGS HAVE BEEN PREPARED IN ACCORDANCE WITH LTS'S QUOTATION OR PER AN ACCEPTED CHANGE ORDER AND OTHER APPLICABLE CONTRACT DOCUMENTS
3. FINAL APPROVAL BY THE GENERAL CONTRACTOR CONSTITUTES ACCEPTANCE OF ALL DEVIATIONS TO THE CONTRACT DOCUMENTS MADE BY LTS DRAFTING & ENGINEERING IN THESE DRAWINGS
4. THESE DRAWINGS REPRESENT LTS'S INTERPRETATION OF THE APPLICATION OF PRODUCTS TO THIS PROJECT IN FUNCTIONAL COMPLIANCE WITH THE ARCHITECTS DRAWINGS AND SPECIFICATIONS IT IS IMPORTANT THAT THIS INTERPRETATION BE REVIEWED DIMENSIONALLY AND FUNCTIONALLY WITH RESPECT TO ACTUAL ARCHITECT INTENT INTERFACING CONDITIONS MATERIALS AND JOB SITE CONDITIONS
5. ALL DIMENSIONS SHALL BE FIELD VERIFIED AND/OR APPROVED BY THE GENERAL CONTRACTOR PRIOR TO GLASS ORDERING AND FABRICATION LTS DRAFTING & ENGINEERING WILL ASSUME NO RESPONSIBILITY FOR DIMENSIONAL ERRORS OR CHANGES RESULTING FROM FIELD CONDITIONS
6. PROJECT MATERIALS MUST BE PROTECTED IMMEDIATELY FROM STAINING BY WET CARDBOARD PAPER AND FROM THE ACTION OF HARSH ALKALIS AND SAND IN CONCRETE STUCCO MORTAR OR PLASTER THE SETTING OF THE PROJECT MATERIALS REQUIRES GENERAL CONTRACTOR TO CLOSELY SUPERVISE OTHER TRADES SO AS TO PREVENT MARRING OR DISCOLORATION FROM ANY CAUSE
7. ALL SEALANT JOINTS SHOULD BE SEALED WATERTIGHT FOLLOWING THE SEALANT MANUFACTURERS RECOMMENDATIONS AS TO SIZE METHOD OF APPLICATION AND COMPATIBILITY WITH ADJOINING MATERIALS
8. ALL FRAMING SYSTEMS SHALL BE FABRICATED & INSTALLED PER THE MANUFACTURERS INSTRUCTIONS
9. ALL GLASS AND FINISHED MATERIAL MUST BE PROTECTED DURING WELDING OPERATIONS FIREPROOFING OR ANY OTHER PROCESS THAT MAY BE HARMFUL TO THE APPEARANCE OR PERFORMANCE OF THE PROJECT MATERIALS
10. THE ROUGH OPENINGS PROVIDED MUST BE SQUARE AND WITHIN SPECIFIED BUILDING TOLERANCES
11. PERIMETER SUBSTRATE MUST BE CAPABLE OF WITHSTANDING REACTION FORCES IMPOSED BY DESIGN LOADS
12. LAWS AND BUILDING AND SAFETY CODES GOVERNING THE DESIGN AND USE OF GLAZING ENTRANCE WINDOW AND CURTAIN WALL PRODUCTS VARY WIDELY LTS DOES NOT CONTROL THE SELECTION OF PRODUCT CONFIGURATIONS OPERATING HARDWARE OR GLAZING MATERIALS AND ASSUMES NO RESPONSIBILITY

CALCULATIONS

- ☐ A PRELIMINARY STRUCTURAL REVIEW HAS BEEN PERFORMED ON THESE SHOP DRAWINGS THIS REVIEW INCLUDED A MATERIAL CHECK TO MEET THE DESIGN CRITERIA SHOWN ON THIS SHEET THE PERIMETER ANCHORAGE AS SHOWN HAS NOT BEEN REVIEWED LTS WILL NOT BE LIABLE FOR INSUFFICIENT ANCHORING AND/OR SUBSTRATE
- ■ A PRELIMINARY STRUCTURAL REVIEW HAS BEEN PERFORMED ON THESE SHOP DRAWINGS THIS REVIEW INCLUDED MATERIAL AND PERIMETER ANCHORAGE CHECKS TO MEET THE DESIGN CRITERIA SHOWN ON THIS SHEET LTS WILL NOT BE LIABLE FOR INSUFFICIENT SUBSTRATE AND/OR ANCHORING WHICH DEVIATES FROM THAT SHOWN
- ☐ FORMAL CALCULATIONS WILL NOT BE SUBMITTED
- ■ FORMAL CALCULATIONS (EXTERIOR ELEVATIONS ONLY) SEALED BY A PROFESSIONAL ENGINEER WILL BE SUBMITTED AFTER SHOP DRAWING APPROVAL

SHEET INDEX

NO	DESCRIPTION	NO	DESCRIPTION
101	COVER SHEET		
102	DOOR HARDWARE SHEET		
201	FIRST FLOOR PLAN SHEET		
202	SECOND FLOOR PLAN SHEET		
301	STOREFRONT ELEVATION SHEET		
302	STOREFRONT ELEVATION SHEET		
303	STOREFRONT ELEVATION SHEET		
304	STOREFRONT ELEVATION SHEET		
401	CURTAIN WALL ELEVATION SHEET		
501 513	STOREFRONT DETAIL SHEETS		
601	CURTAIN WALL DETAIL SHEET		
602	CURTAIN WALL DETAIL SHEET		
603	ANCHOR LAYOUT SHEET		

City of Portland Development Services Center OCT 21 2011 09-150840-DFS Permit Number

DRAFTING LTS ENGINEERING

WWW.LTSDRAFTING.COM

6855 SOUTH HAVANA STREET SUITE 580
CENTENNIAL CO 80112
Phone (303) 858-9858
Fax (303) 858-8373
Email info@ltsdrafting.com

REVISIONS

REVIEWED
- ☐ NO EXCEPTIONS NOTED
- ☑ IMPLEMENT AS NOTED
- ☐ REVISE AND RESUBMIT
- ☐ REJECTED

It is mutually not review's limited in scope and not detailed and is only to conform with the visual design concept set forth in the Contract Documents. The Contractor is responsible for confirming quantities and verifying dimensions, selecting fabrication methods, techniques, sequences and procedures, coordinating, and satisfying all other requirements of the Contract Documents. Review does not imply approval of any deviations from the Contract Documents not clearly noted by the Contractor and specifically accepted by the Architect in writing.

By DAVID WILLIAMS

Date 12-30-10

MICHAEL WILLIS ARCHITECTS

ARCHITECT

MICHAEL WILLIS
ARCHITECTS
70 NW COUCH STREET
PORTLAND OR 97209
503 973 5151

GLAZING SUBCONTRACTOR

CAPITOL CITY GLASS

1450 FRONT NE
SALEM OREGON 97303
503 581 2559

SHOP DRAWINGS FOR

PORTLAND FIRE & RESCUE STATION 31

1927 SE 174TH AVENUE
PORTLAND OR 97233

SHEET DESCRIPTION

COVER SHEET

PROJECT	10-0257
SCALE	NTS
DATE	12 16 10

SHEET

101

09-150840 DFS 03

BR-C-2/2

HARDWARE SET 1

DOOR SWING	SINGLE INSWING
DOOR NO	101A
ELEVATION	SA/303

QTY PER OPENING	PART NO & DESCRIPTION	MFG	FINISH
1 SET	PIVOT 195 3/4 OFFSET	RX	626
1	SIDE PIVOT M19	RX	626
1	KEYPAD LOCK 11 G1 8278 PKL	SA	626
1	CLOSER 281 O	SA	689
1	DROP PLATE 281 D	SA	689
1	WALL BUMPER 403	RO	626
1	THRESHOLD MCK 271 A LAR	PE	
1	DATA TRANSFER DEVICE DTD WITH SOLO PLUS SOFTWARE	SA	

GASKETING UNDER ALUMINUM DOOR SUPPLIER KEYPAD LOCK

NOTE TO ERECTOR
LTS ASSUMES NO RESPONSIBILITY FOR HARDWARE COMPATIBILITY PLEASE CONSULT DOOR MANUFACTURER

DRAFTING LTS ENGINEERING

WWW LTSDRAFTING COM

6855 SOUTH HAVANA STREET SUITE 580
CENTENNIAL CO 80112
Phone (303) 858 9858
Fax (303) 858 8373
Email info@ltsdrafting com

REVISIONS

RECEIVED
SEP 07 2011
BDS
DOCUMENT SERVICES

ARCHITECT

MICHAEL WILLIS
ARCHITECTS
70 NW COUCH STREET
PORTLAND OR 97209
503 973 5151

GLAZING SUBCONTRACTOR

CAPITOL CITY GLASS

1450 FRONT NE
SALEM OREGON 97303
503 581 2559

SHOP DRAWINGS FOR

PORTLAND FIRE
& RESCUE STATION 31

1927 SE 174TH AVENUE
PORTLAND OR 97233

SHEET DESCRIPTION

DOOR HARDWARE
SHEET

PROJECT	10 0257
SCALE	NTS
DATE	12 16 10

SHEET

102

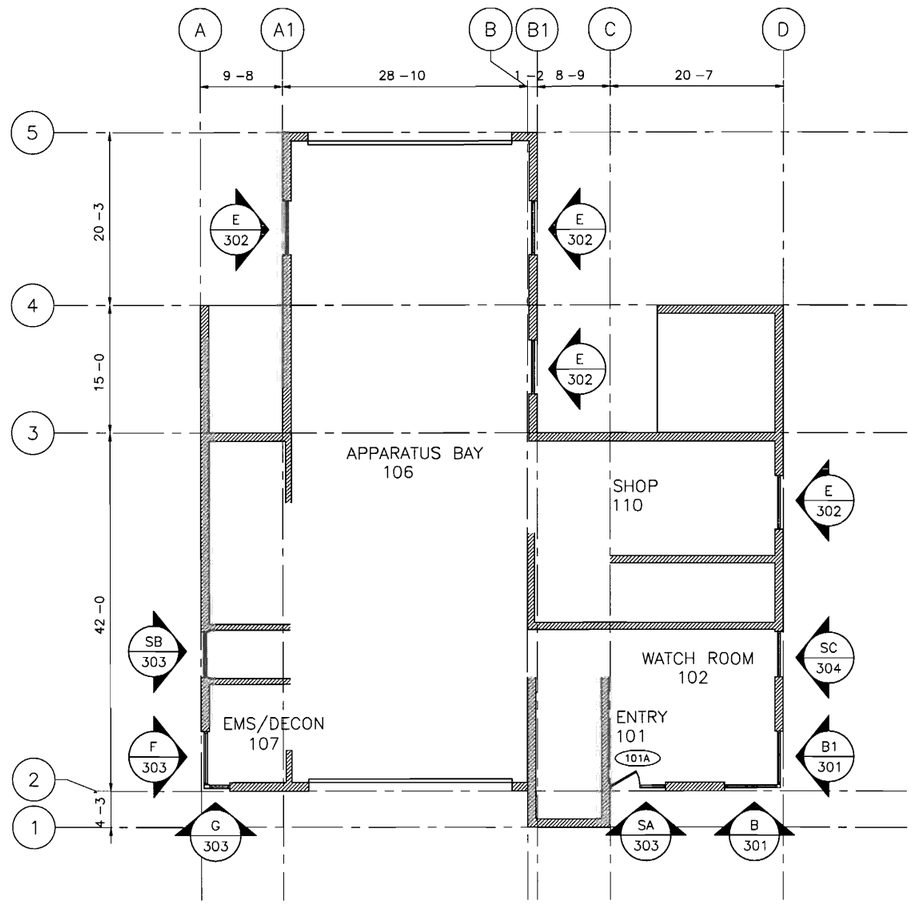

STOREFRONT RECAP
B/301 1 THUS EAST
B1/301 1 THUS NORTH
E/302 3 THUS NORTH
E/302 1 THUS SOUTH
F/303 1 THUS SOUTH
G/303 1 THUS EAST
SA/303 1 THUS EAST
SB/303 1 THUS SOUTH
SC/304 1 THUS NORTH

1 / 201 FIRST FLOOR PLAN

ARCH REF 1/A2 01

1/8 =1 –0

PLAN FOR LOCATION PURPOSES ONLY
DO NOT SCALE ELEVATIONS DRAWN
FROM EXTERIOR OF BUILDING TYPICAL

DRAFTING ENGINEERING
WWW LTSDRAFTING COM

6855 SOUTH HAVANA STREET SUITE 580
CENTENNIAL CO 80112
Phone (303) 858 9858
Fax (303) 858 8373
Email info@ltsdrafting com

REVISIONS

RECEIVED
SEP 07 2011
BDS
DOCUMENT SERVICES

ARCHITECT

MICHAEL WILLIS
ARCHITECTS
70 NW COUCH STREET
PORTLAND OR 97209
503 973 5151

GLAZING SUBCONTRACTOR

CAPITOL CITY GLASS

1450 FRONT NE
SALEM OREGON 97303
503 581 2559

SHOP DRAWINGS FOR

PORTLAND FIRE
& RESCUE STATION 31

1927 SE 174TH AVENUE
PORTLAND OR 97233

SHEET DESCRIPTION

FIRST FLOOR
PLAN SHEET

PROJECT	10 0257
SCALE	1/8 =1 0
DATE	12 16 10

SHEET

201

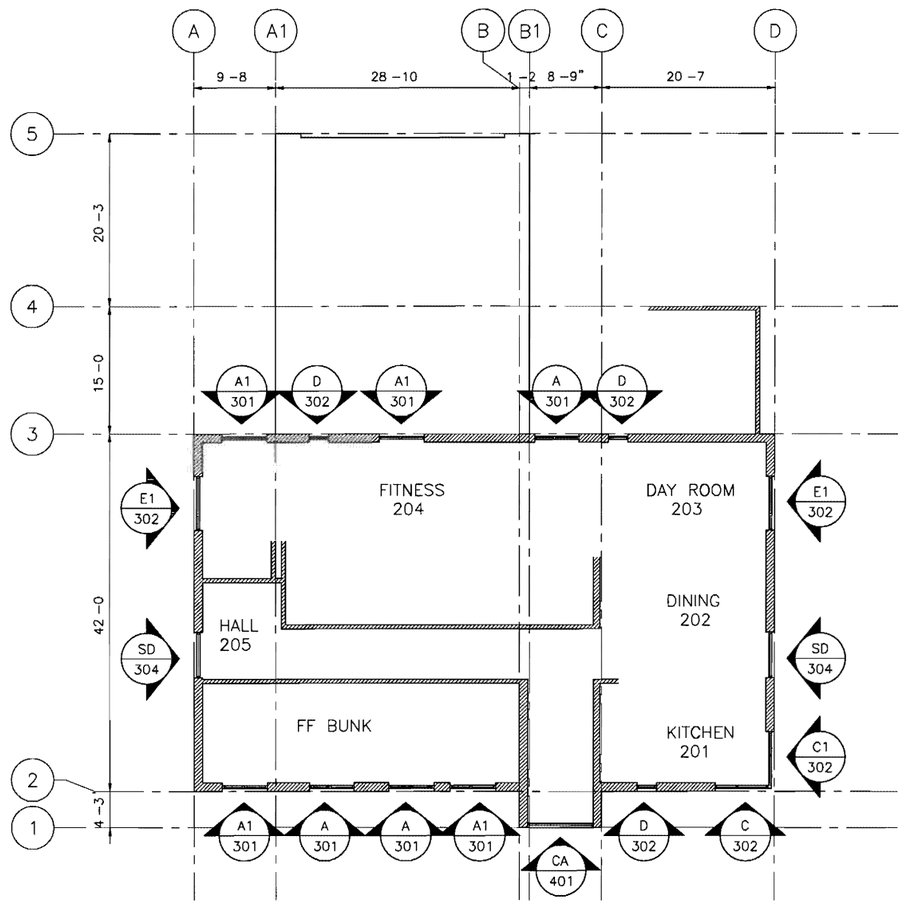

STOREFRONT RECAP
A/301 2 THUS EAST
A/301 1 THUS WEST
A1/301 2 THUS EAST
A1/301 2 THUS WEST
C/302 1 THUS EAST
C1/302 1 THUS NORTH
D/302 1 THUS EAST
D/302 2 THUS WEST
E1/302 1 THUS NORTH
E1/302 1 THUS SOUTH
SD/304 1 THUS NORTH
SD/304 1 THUS SOUTH

CURTAIN WALL RECAP
CA/401 1 THUS EAST

2 / 202 SECOND FLOOR PLAN

ARCH REF 1/A2 02

1/8 =1 –0

PLAN FOR LOCATION PURPOSES ONLY
DO NOT SCALE ELEVATIONS DRAWN
FROM EXTERIOR OF BUILDING TYPICAL

DRAFTING LTS ENGINEERING
WWW LTSDRAFTING COM

6855 SOUTH HAVANA STREET SUITE 580
CENTENNIAL CO 80112
Phone (303) 858 9858
Fax (303) 858 8373
Email info@ltsdrafting com

REVISIONS

RECEIVED
SEP 07 2011
BDS
DOCUMENT SERVICES

ARCHITECT

MICHAEL WILLIS
ARCHITECTS
70 NW COUCH STREET
PORTLAND OR 97209
503 973 5151

GLAZING SUBCONTRACTOR

CAPITOL CITY GLASS

1450 FRONT NE
SALEM OREGON 97303
503 581 2559

SHOP DRAWINGS FOR

PORTLAND FIRE
& RESCUE STATION 31

1927 SE 174TH AVENUE
PORTLAND OR 97233

SHEET DESCRIPTION

SECOND FLOOR
PLAN SHEET

PROJECT	10 0257
SCALE	1/8 =1 0
DATE	12 16 10

SHEET

202

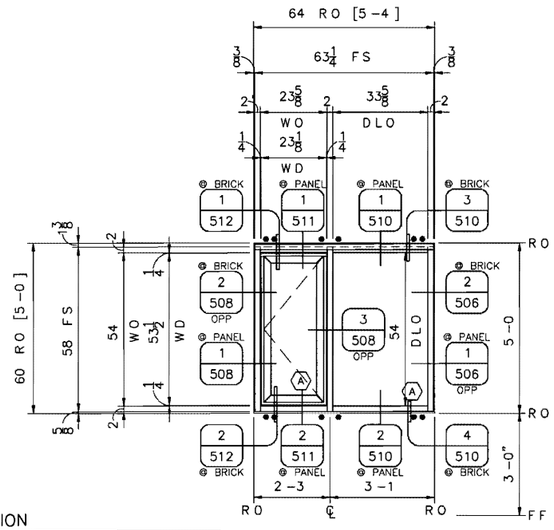

A / 301 SF ELEVATION

[3] REQ D THUS TOTAL
(2) SECOND FLOOR EAST
(1) SECOND FLOOR WEST
KAWNEER 451T SF (2 X 4 1/2)
INSIDE GLAZED SCREW SPLINE
KAWNEER 8225TL WINDOW
CASEMENT OUT

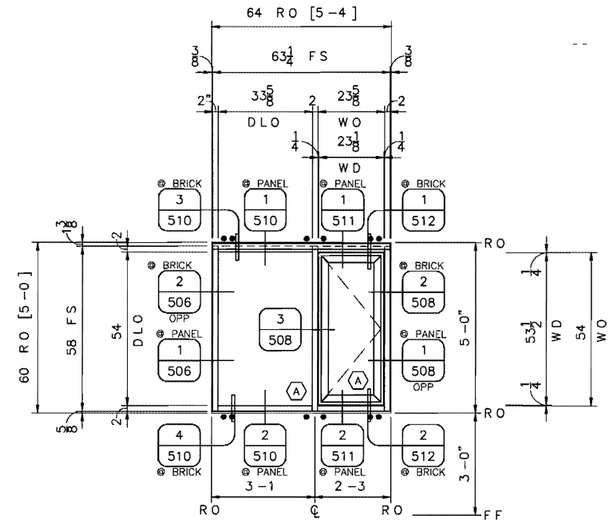

A1 / 301 SF ELEVATION

[4] REQ D THUS TOTAL
(2) SECOND FLOOR EAST
(2) SECOND FLOOR WEST
KAWNEER 451T SF (2 X 4 1/2")
INSIDE GLAZED SCREW SPLINE
KAWNEER 8225TL WINDOW
CASEMENT OUT

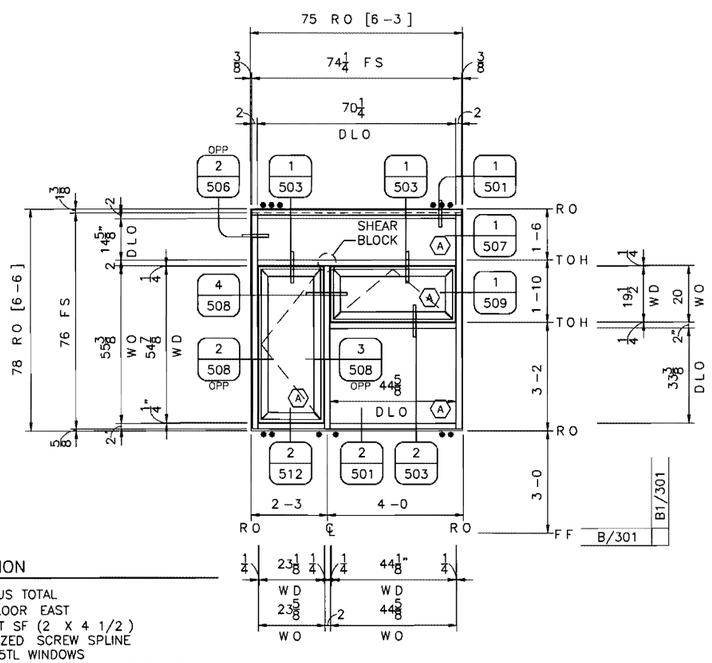

B / 301 SF ELEVATION

[1] REQ D THUS TOTAL
(1) FIRST FLOOR EAST
KAWNEER 451T SF (2 X 4 1/2)
OUTSIDE GLAZED SCREW SPLINE
KAWNEER 8225TL WINDOWS
CASEMENT OUT & AWNING PROJECT OUT

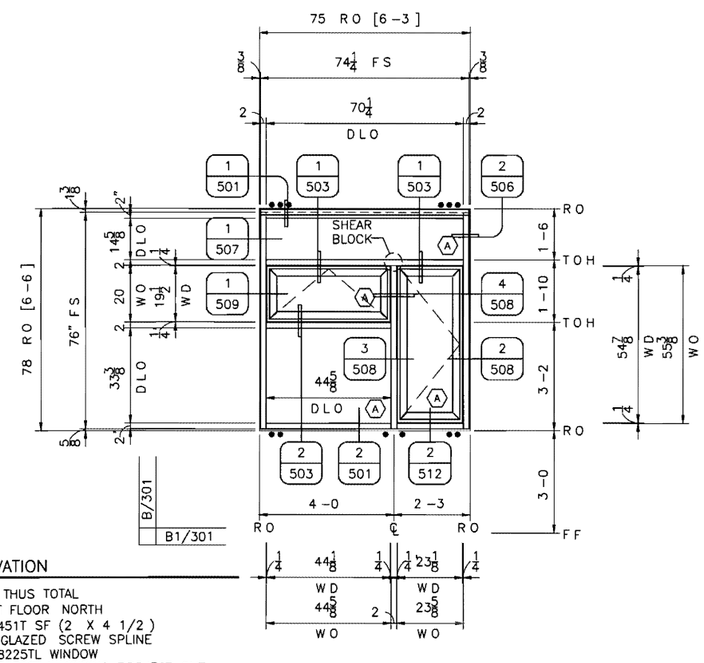

B1 / 301 SF ELEVATION

[1] REQ D THUS TOTAL
(1) FIRST FLOOR NORTH
KAWNEER 451T SF (2 X 4 1/2)
OUTSIDE GLAZED SCREW SPLINE
KAWNEER 8225TL WINDOW
CASEMENT OUT & AWNING PROJECT OUT

FIELD VERIFY ALL DIMENSIONS

DRAFTING LTS ENGINEERING
WWW LTSDRAFTING COM

6855 SOUTH HAVANA STREET SUITE 580
CENTENNIAL CO 80112
Phone (303) 858 9858
Fax (303) 858 8373
Email info@ltsdrafting com

REVISIONS

RECEIVED
SEP 07 2011
BDS
DOCUMENT SERVICES

ARCHITECT

MICHAEL WILLIS
ARCHITECTS
70 NW COUCH STREET
PORTLAND OR 97209
503 973 5151

GLAZING SUBCONTRACTOR

CAPITOL CITY GLASS

1450 FRONT NE
SALEM OREGON 97303
503 581 2559

SHOP DRAWINGS FOR

PORTLAND FIRE
& RESCUE STATION 31

1927 SE 174TH AVENUE
PORTLAND OR 97233

SHEET DESCRIPTION

STOREFRONT
ELEVATION SHEET

PROJECT	10 0257
SCALE	1/2 =1 0
DATE	12 16 10

SHEET

301

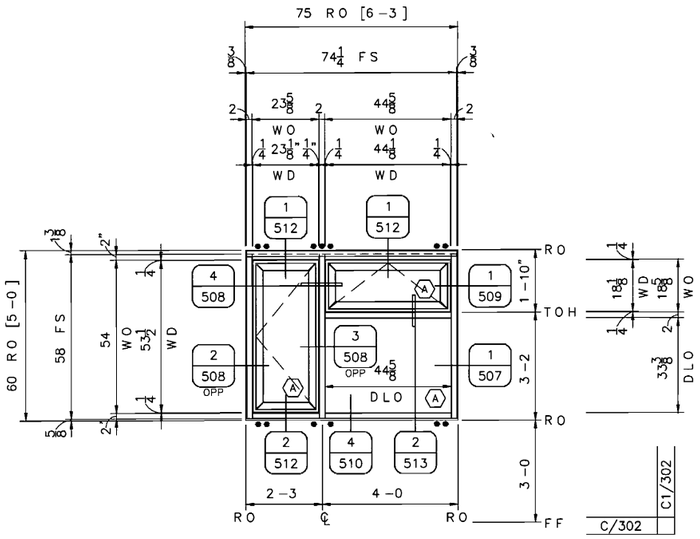

C / 302 SF ELEVATION

[1] REQ D THUS TOTAL
(1) SECOND FLOOR EAST
KAWNEER 451T SF (2 X 4 1/2)
INSIDE GLAZED SCREW SPLINE
KAWNEER 8225TL WINDOWS
CASEMENT OUT & AWNING PROJECT OUT

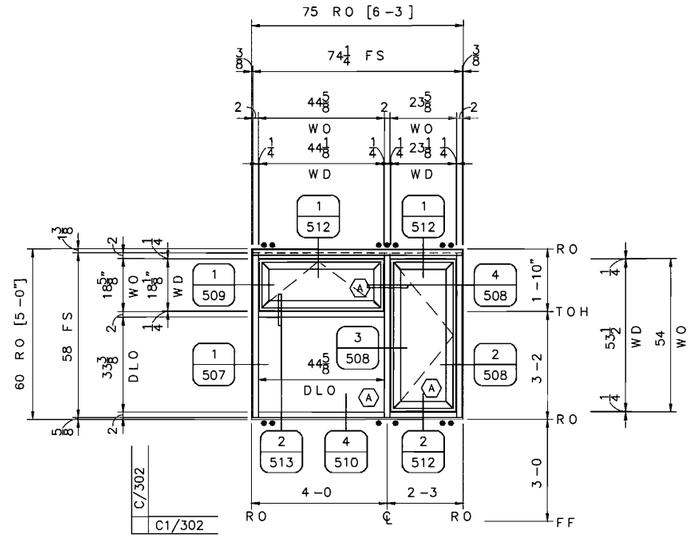

C1 / 302 SF ELEVATION

[1] REQ D THUS TOTAL
(1) SECOND FLOOR NORTH
KAWNEER 451T SF (2 X 4 1/2")
INSIDE GLAZED SCREW SPLINE
KAWNEER 8225TL WINDOWS
CASEMENT OUT & AWNING PROJECT OUT

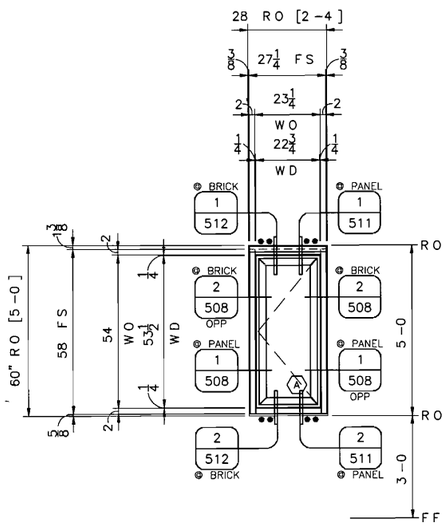

D / 302 SF ELEVATION

[3] REQ D THUS TOTAL
(1) SECOND FLOOR EAST
(2) SECOND FLOOR WEST
KAWNEER 451T SF (2 X 4 1/2)
INSIDE GLAZED SCREW SPLINE
KAWNEER 8225TL WINDOW
CASEMENT OUT

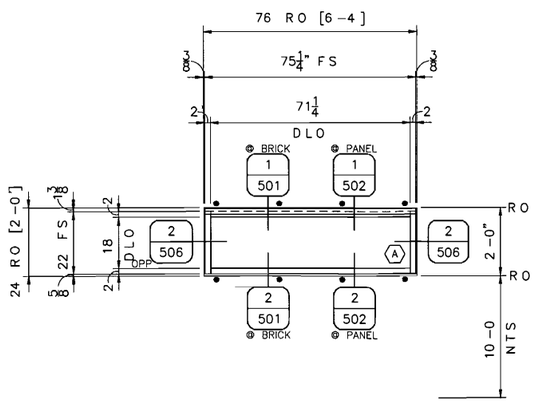

E / 302 SF ELEVATION

[4] REQ D THUS TOTAL
(3) FIRST FLOOR NORTH
(1) FIRST FLOOR SOUTH
KAWNEER 451T SF (2" X 4 1/2)
OUTSIDE GLAZED SCREW SPLINE

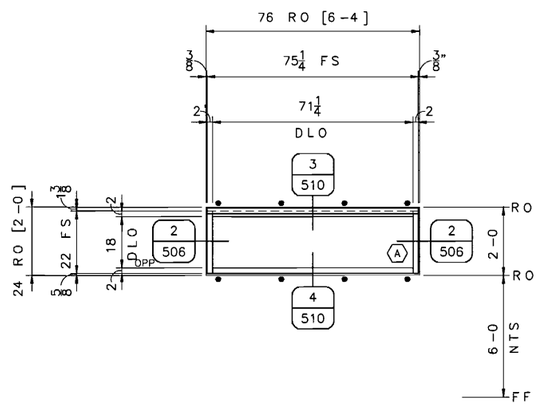

E1 / 302 SF ELEVATION

[2] REQ D THUS TOTAL
(1) SECOND FLOOR NORTH
(1) SECOND FLOOR SOUTH
KAWNEER 451T SF (2 X 4 1/2)
INSIDE GLAZED SCREW SPLINE

FIELD VERIFY ALL DIMENSIONS

DRAFTING ENGINEERING
WWW LTSDRAFTING COM

6855 SOUTH HAVANA STREET SUITE 580
CENTENNIAL CO 80112
Phone (303) 858 9858
Fax (303) 858 8373
Email info@ltsdrafting com

REVISIONS

RECEIVED
SEP 07 2011
BDS
DOCUMENT SERVICES

ARCHITECT

MICHAEL WILLIS
ARCHITECTS
70 NW COUCH STREET
PORTLAND OR 97209
503 973 5151

GLAZING SUBCONTRACTOR

CAPITOL CITY GLASS

1450 FRONT NE
SALEM OREGON 97303
503 581 2559

SHOP DRAWINGS FOR

PORTLAND FIRE
& RESCUE STATION 31

1927 SE 174TH AVENUE
PORTLAND OR 97233

SHEET DESCRIPTION

STOREFRONT
ELEVATION SHEET

PROJECT	10 0257
SCALE	1/2"=1 0
DATE	12 16 10

SHEET

302

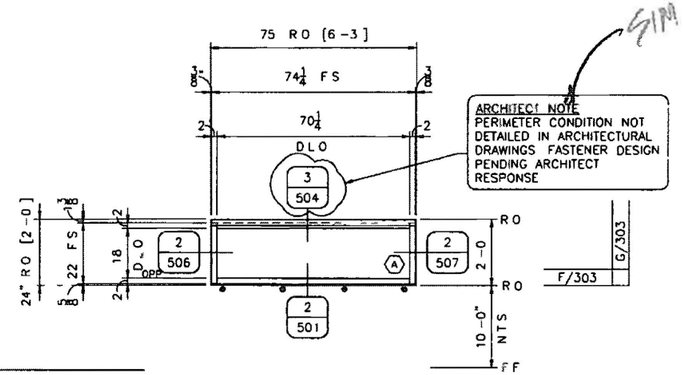

F 303 SF ELEVATION

[1] REQ D THUS TOTAL
(1) FIRST FLOOR SOUTH
KAWNEER 451T SF (2 X 4 1/2)
OUTSIDE GLAZED SCREW SPLINE

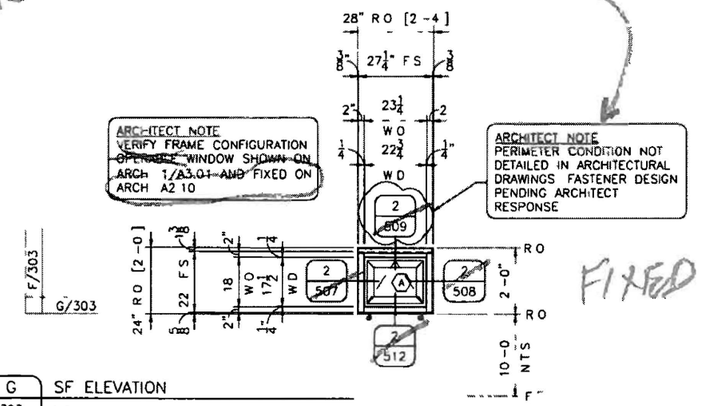

G 303 SF ELEVATION

[1] REQ D THUS TOTAL
(1) FIRST FLOOR EAST
KAWNEER 451T SF (2 X 4 1/2)
OUTSIDE GLAZED SCREW SPLINE
KAWNEER 8225TL AWNING WINDOW
PROJECT OUT

City of Portland
Bureau of
Development Services
By JMG Date 8/1/11
Approved by
Planning & Zoning Review

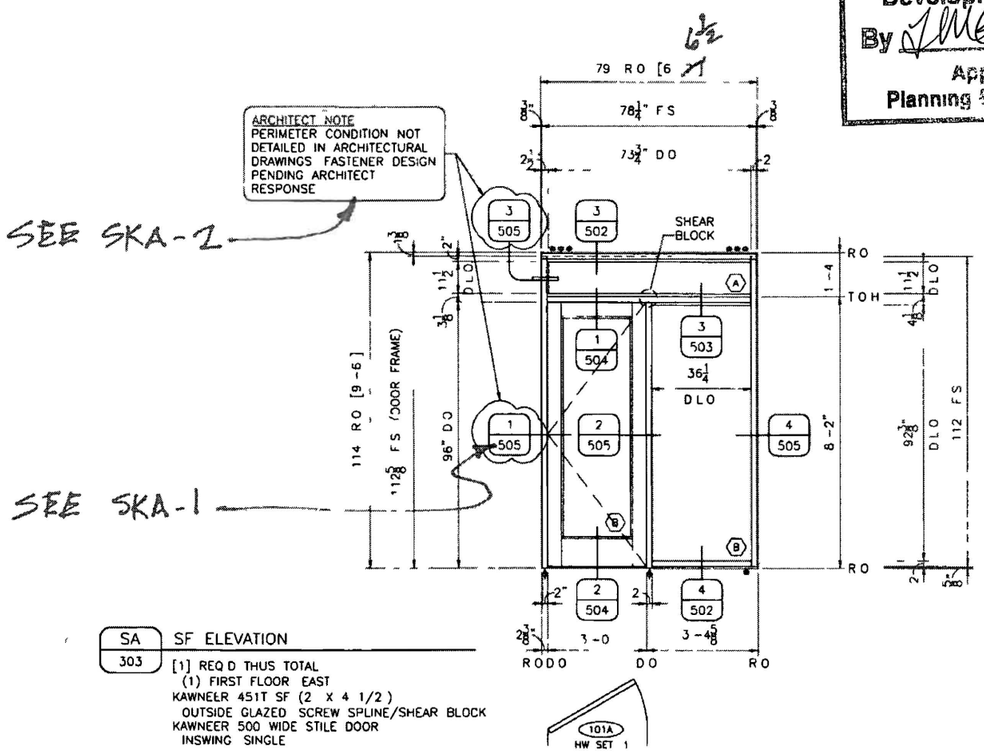

SA 303 SF ELEVATION

[1] REQ D THUS TOTAL
(1) FIRST FLOOR EAST
KAWNEER 451T SF (2 X 4 1/2)
OUTSIDE GLAZED SCREW SPLINE/SHEAR BLOCK
KAWNEER 500 WIDE STILE DOOR
INSWING SINGLE

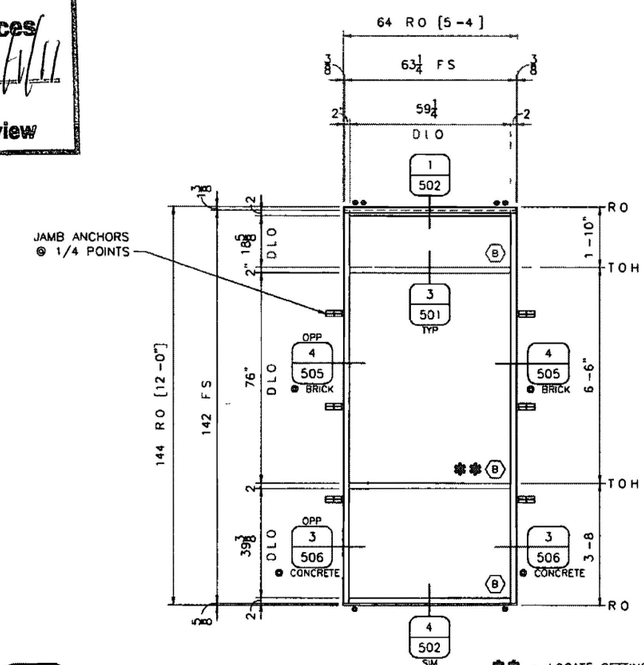

SB 303 SF ELEVATION

[1] REQ D THUS TOTAL
(1) FIRST FLOOR SOUTH
KAWNEER 451T SF (2" X 4 1/2)
OUTSIDE GLAZED SCREW SPLINE

FIELD VERIFY ALL DIMENSIONS

DRAFTING LTS ENGINEERING
WWW LTSDRAFTING COM
6855 SOUTH HAVANA STREET SUITE 580
CENTENNIAL CO 80112
Phone (303) 858-9858
Fax (303) 858-8373
Email info@ltsdrafting com

REVISIONS

ARCHITECT

MICHAEL WILLIS
ARCHITECTS
70 NW COUCH STREET
PORTLAND OR 97209
503 973 5151

GLAZING SUBCONTRACTOR

CAPITOL CITY GLASS

1450 FRONT NE
SALEM OREGON 97303
503 581 2559

SHOP DRAWINGS FOR

PORTLAND FIRE
& RESCUE STATION 31

1927 SE 174TH AVENUE
PORTLAND OR 97233

SHEET DESCRIPTION

STOREFRONT
ELEVATION SHEET

PROJECT	10-0257
SCALE	1/2"=1'-0"
DATE	12 16 10

SHEET

303

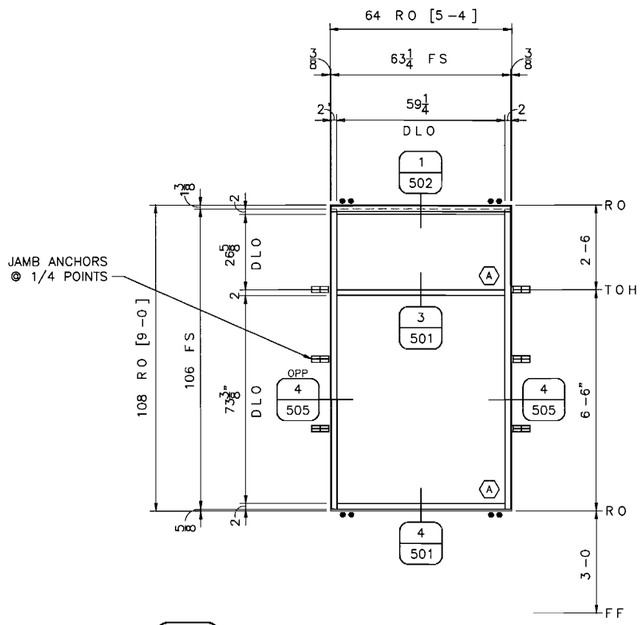

SC 304 SF ELEVATION

[1] REQ D THUS TOTAL
(1) FIRST FLOOR NORTH
KAWNEER 451T SF (2 X 4 1/2)
OUTSIDE GLAZED SCREW SPLINE

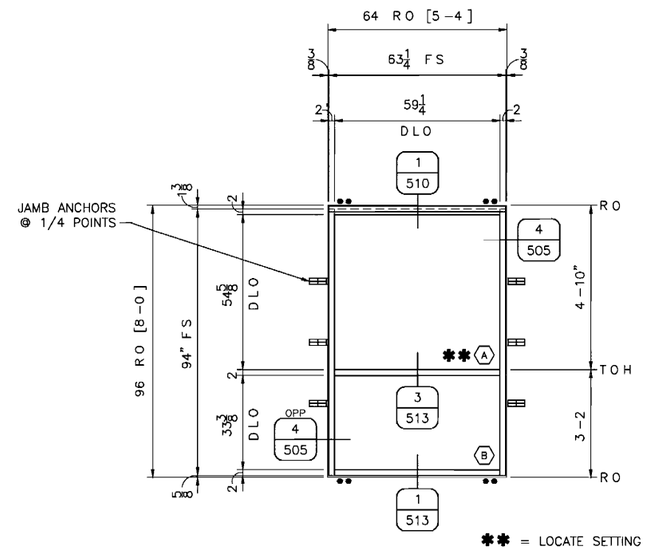

** = LOCATE SETTING BLOCKS
@ 1/8 POINTS

SD 304 SF ELEVATION

[2] REQ D THUS TOTAL
(1) SECOND FLOOR NORTH
(1) SECOND FLOOR SOUTH
KAWNEER 451T SF (2 X 4 1/2)
INSIDE GLAZED SCREW SPLINE

FIELD VERIFY ALL DIMENSIONS

DRAFTING ENGINEERING
WWW LTSDRAFTING COM

6855 SOUTH HAVANA STREET SUITE 580
CENTENNIAL CO 80112
Phone (303) 858 9858
Fax (303) 858 8373
Email info@ltsdrafting com

REVISIONS

RECEIVED
SEP 07 2011
BDS
DOCUMENT SERVICES

ARCHITECT

MICHAEL WILLIS
ARCHITECTS
70 NW COUCH STREET
PORTLAND OR 97209
503 973 5151

GLAZING SUBCONTRACTOR

CAPITOL CITY GLASS

1450 FRONT NE
SALEM OREGON 97303
503 581 2559

SHOP DRAWINGS FOR

PORTLAND FIRE
& RESCUE STATION 31

1927 SE 174TH AVENUE
PORTLAND OR 97233

SHEET DESCRIPTION

STOREFRONT
ELEVATION SHEET

PROJECT	10 0257
SCALE	1/2 =1 0
DATE	12 16 10

SHEET

304

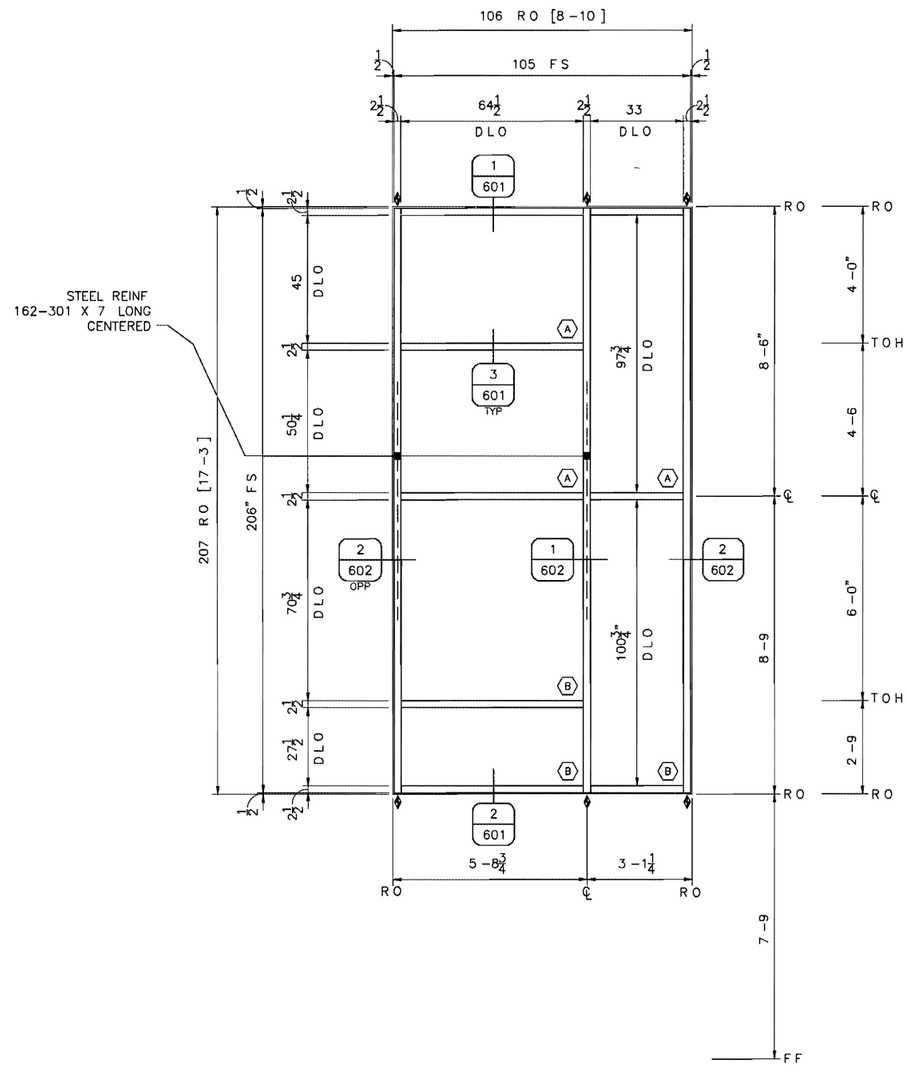

CA 401 CW ELEVATION

[1] REQ D THUS TOTAL
(1) SECOND FLOOR EAST
KAWNEER 1600 SYS 1 CW (2 1/2 X 7 1/2)
OUTSIDE GLAZED SHEAR BLOCK

FIELD VERIFY ALL DIMENSIONS

DRAFTING ENGINEERING
WWW LTSDRAFTING COM

6855 SOUTH HAVANA STREET SUITE 580
CENTENNIAL CO 80112
Phone (303) 858 9858
Fax (303) 858 8373
Email info@ltsdrafting com

REVISIONS

RECEIVED
SEP 07 2011
BDS
DOCUMENT SERVICES

ARCHITECT

MICHAEL WILLIS
ARCHITECTS
70 NW COUCH STREET
PORTLAND OR 97209
503 973 5151

GLAZING SUBCONTRACTOR

CAPITOL CITY GLASS

1450 FRONT NE
SALEM OREGON 97303
503 581 2559

SHOP DRAWINGS FOR

PORTLAND FIRE
& RESCUE STATION 31

1927 SE 174TH AVENUE
PORTLAND OR 97233

SHEET DESCRIPTION

CURTAIN WALL
ELEVATION SHEET

PROJECT	10-0257
SCALE	1/2"=1 0
DATE	12 16 10

SHEET

401

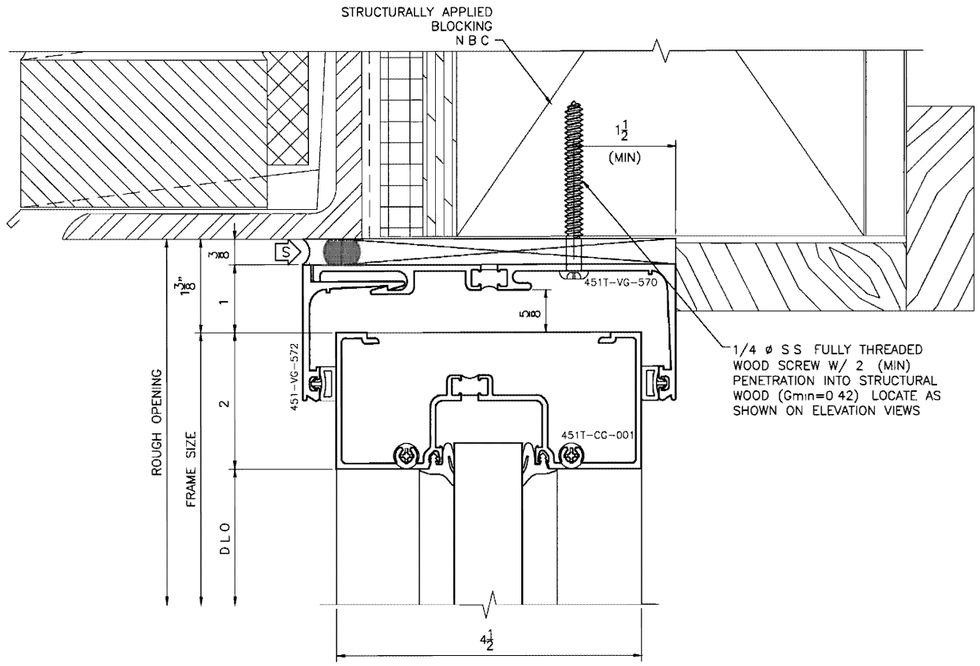

1 HEAD
4 A6 20
451T CG FULL

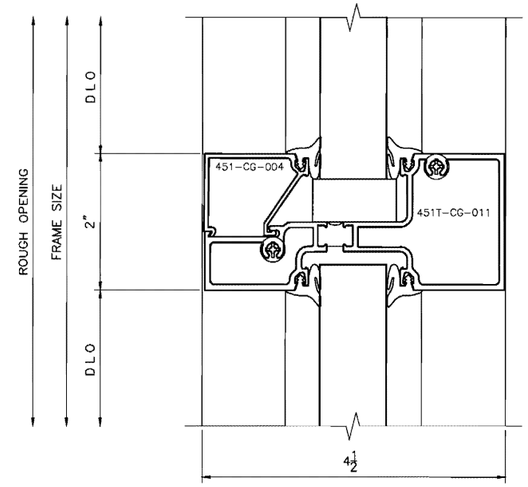

3 HORIZ
451T CG FULL

ARCHITECT NOTE
PERIMETER SUBSTRATE MUST BE CAPABLE OF WITHSTANDING REACTION FORCES IMPOSED BY WIND AND/OR DEAD LOADS

ERECTOR NOTE
PROVIDE WATER DEFLECTOR AT THE ENDS OF INTERMEDIATE HORIZONTALS TYPICAL

2 SILL
12 A6 20
451T CG FULL

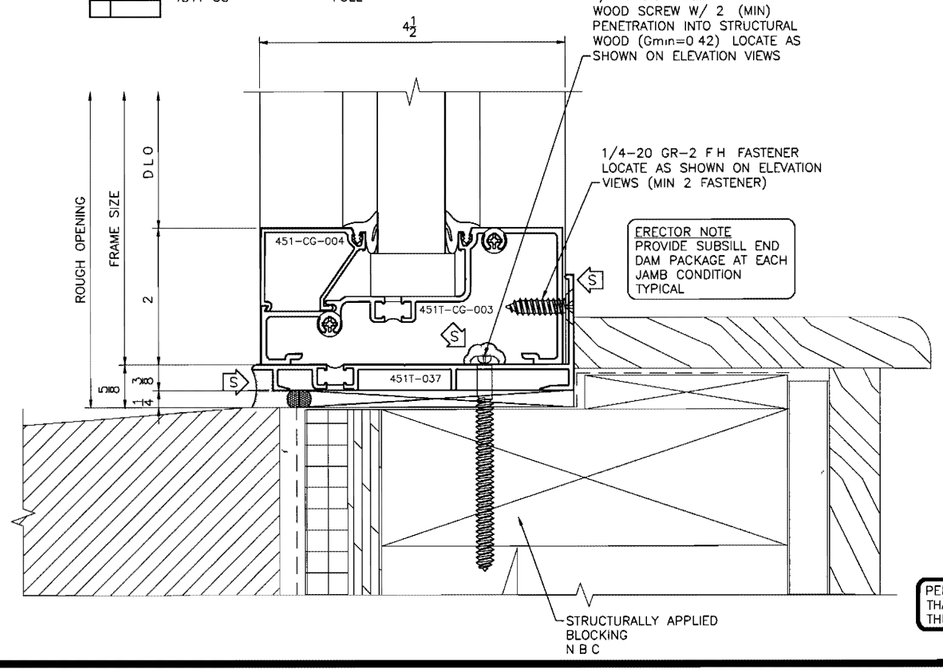

ERECTOR NOTE
PROVIDE SUBSILL END DAM PACKAGE AT EACH JAMB CONDITION TYPICAL

PERIMETER SUBSTRATE SHOWN THAT IS NOT LABELED IS NOT BY THE GLAZING SUB CONTRACTOR

4 SILL
6 A6 21
451T CG FULL

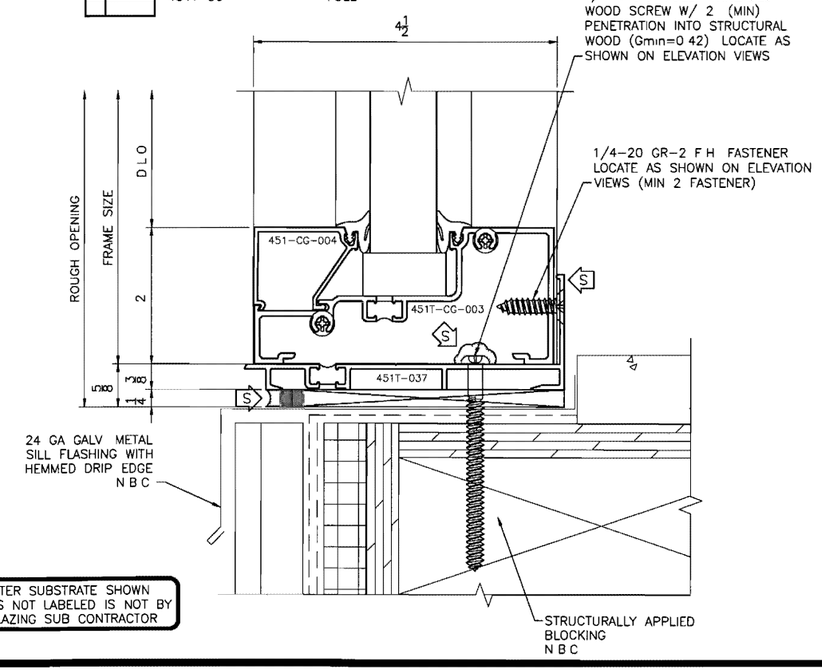

DRAFTING LTS ENGINEERING
WWW LTSDRAFTING COM

6855 SOUTH HAVANA STREET SUITE 580
CENTENNIAL CO 80112
Phone (303) 858 9858
Fax (303) 858 8373
Email info@ltsdrafting com

REVISIONS

RECEIVED
SEP 07 2011
BDS
DOCUMENT SERVICES

ARCHITECT

MICHAEL WILLIS
ARCHITECTS
70 NW COUCH STREET
PORTLAND OR 97209
503 973 5151

GLAZING SUBCONTRACTOR

CAPITOL CITY GLASS

1450 FRONT NE
SALEM OREGON 97303
503 581 2559

SHOP DRAWINGS FOR

PORTLAND FIRE
& RESCUE STATION 31

1927 SE 174TH AVENUE
PORTLAND OR 97233

SHEET DESCRIPTION

STOREFRONT
DETAIL SHEET

PROJECT	10 0257
SCALE	FULL
DATE	12 16 10

SHEET

501

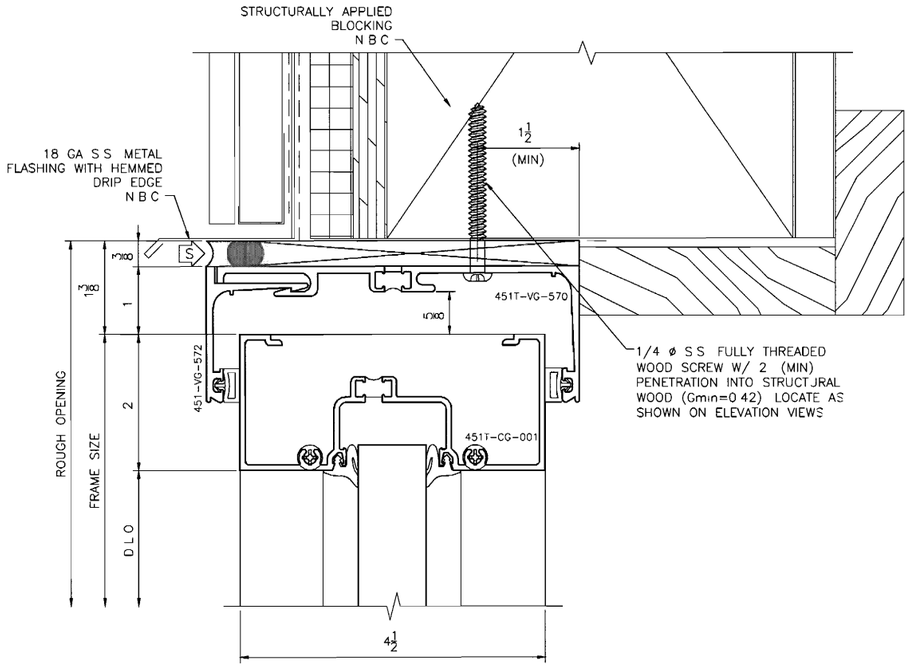

1	HEAD	
3 A6 20	451T CG	FULL
2 A6 21		

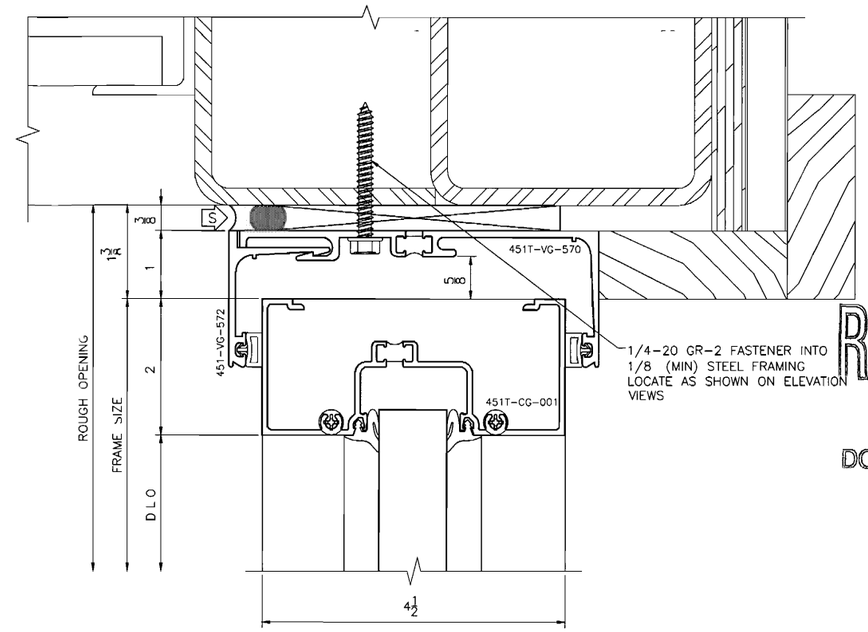

3	HEAD	
4 A6 21	451T CG	FULL

2	SILL	
11 A6 20	451T CG	FULL

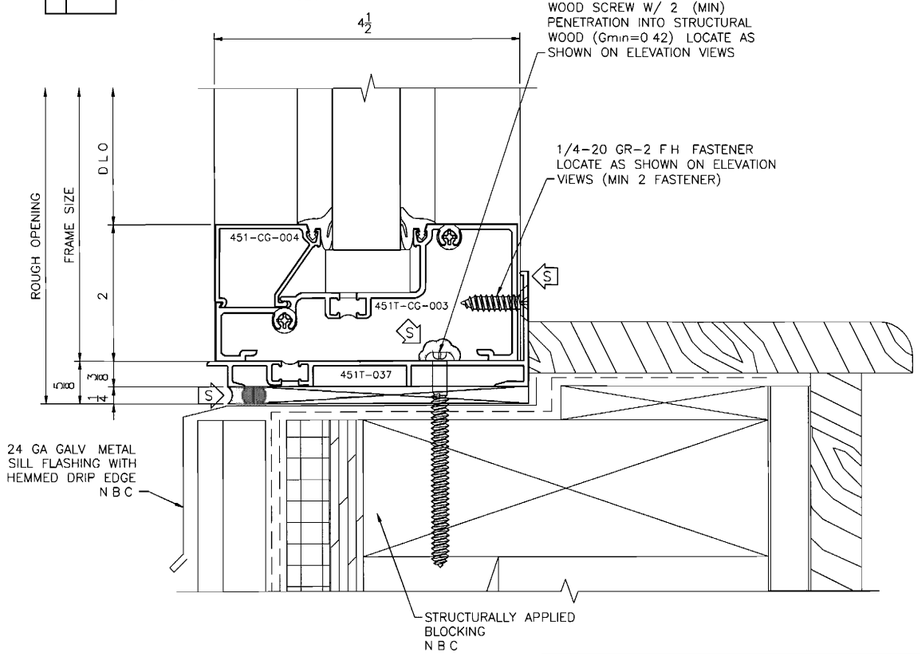

4	SILL	
12 A6 21	451T CG	FULL

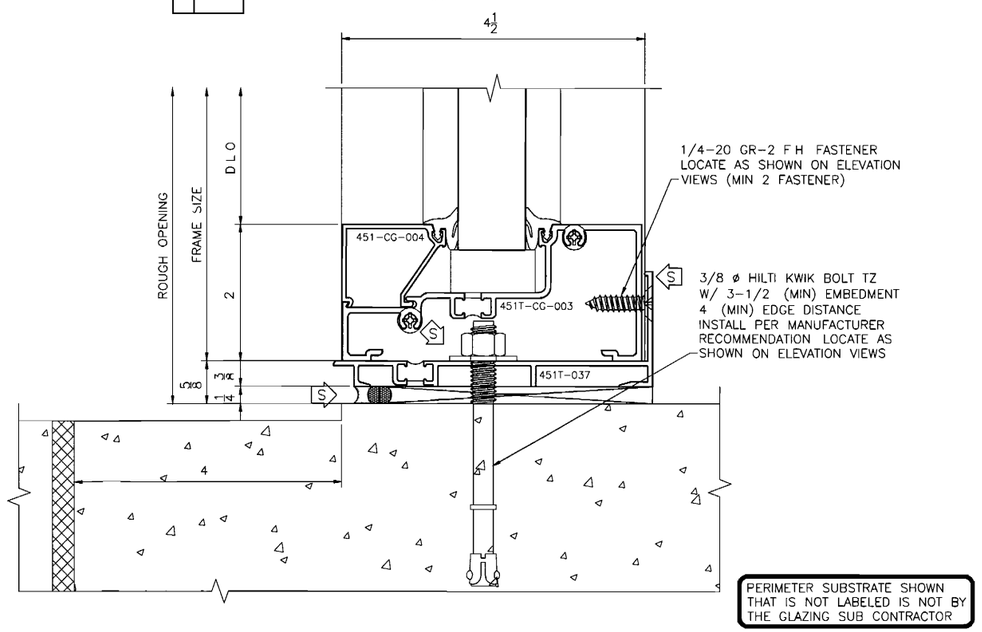

PERIMETER SUBSTRATE SHOWN THAT IS NOT LABELED IS NOT BY THE GLAZING SUB CONTRACTOR

DRAFTING LTS ENGINEERING

WWW LTSDRAFTING COM

6855 SOUTH HAVANA STREET SUITE 580
CENTENNIAL CO 80112
Phone (303) 858 9858
Fax (303) 858 8373
Email info@ltsdrafting com

REVISIONS

RECEIVED
SEP 07 2011
BDS
DOCUMENT SERVICES

ARCHITECT

MICHAEL WILLIS
ARCHITECTS
70 NW COUCH STREET
PORTLAND OR 97209
503 973 5151

GLAZING SUBCONTRACTOR

CAPITOL CITY GLASS

1450 FRONT NE
SALEM OREGON 97303
503 581 2559

SHOP DRAWINGS FOR

PORTLAND FIRE
& RESCUE STATION 31

1927 SE 174TH AVENUE
PORTLAND OR 97233

SHEET DESCRIPTION

STOREFRONT
DETAIL SHEET

PROJECT	10 0257
SCALE	FULL
DATE	12 16 10

SHEET

502

1	HORIZ
	451T CG — FULL
	8225TL CO/PO

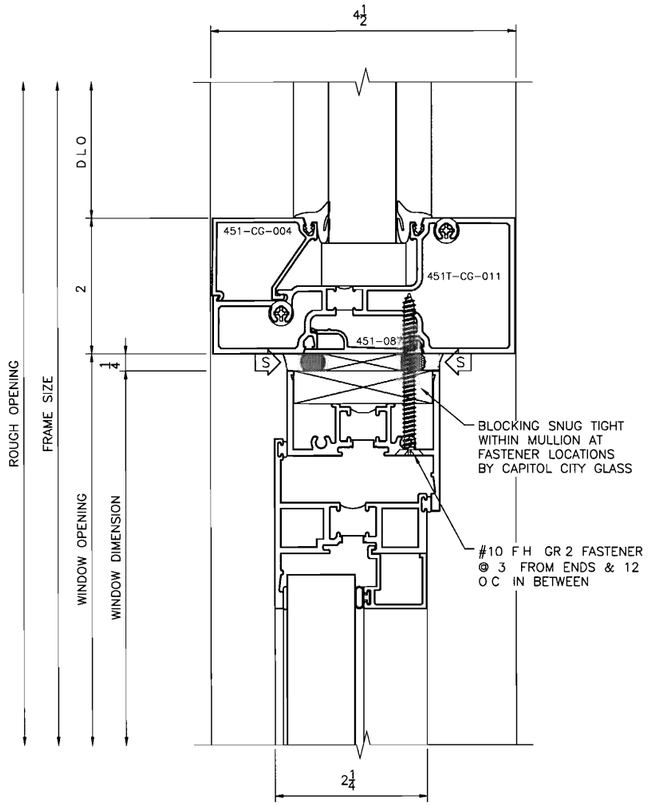

2	HORIZ
	451T CG — FULL
	8225TL CO/PO

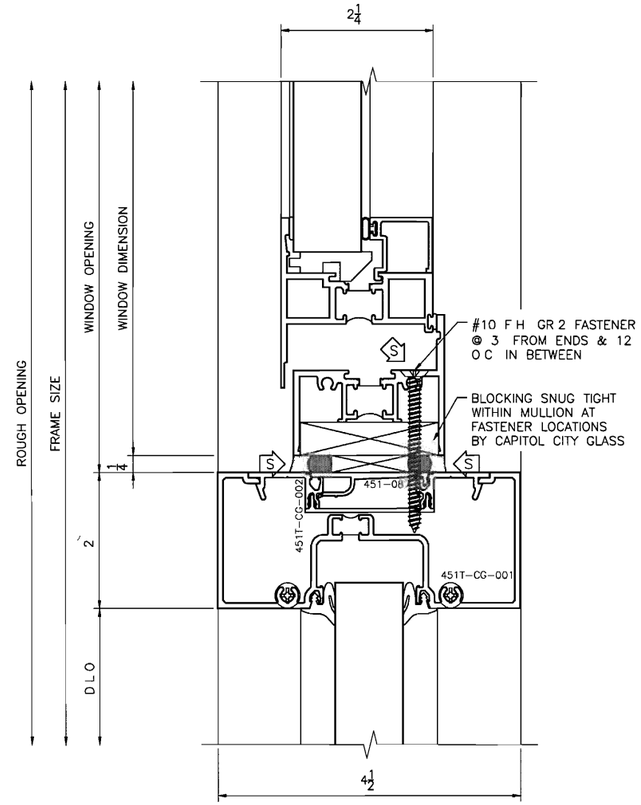

3	HORIZ
	451T CG — FULL

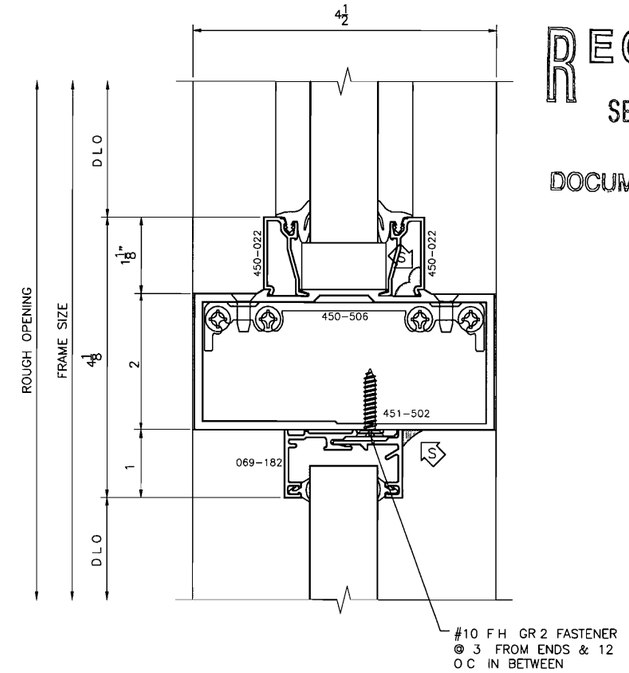

PERIMETER SUBSTRATE SHOWN THAT IS NOT LABELED IS NOT BY THE GLAZING SUB CONTRACTOR

DRAFTING LTS ENGINEERING

WWW LTSDRAFTING COM

6855 SOUTH HAVANA STREET SUITE 580
CENTENNIAL CO 80112
Phone (303) 858 9858
Fax (303) 858 8373
Email info@ltsdrafting com

REVISIONS

RECEIVED
SEP 07 2011
BDS
DOCUMENT SERVICES

ARCHITECT

MICHAEL WILLIS
ARCHITECTS
70 NW COUCH STREET
PORTLAND OR 97209
503 973 5151

GLAZING SUBCONTRACTOR

CAPITOL CITY GLASS

1450 FRONT NE
SALEM OREGON 97303
503 581 2559

SHOP DRAWINGS FOR

PORTLAND FIRE
& RESCUE STATION 31

1927 SE 174TH AVENUE
PORTLAND OR 97233

SHEET DESCRIPTION

STOREFRONT
DETAIL SHEET

PROJECT	10-0257
SCALE	FULL
DATE	12 16 10

SHEET

503

1	DOOR HEAD	
	451T CG 500 WIDE STILE	FULL

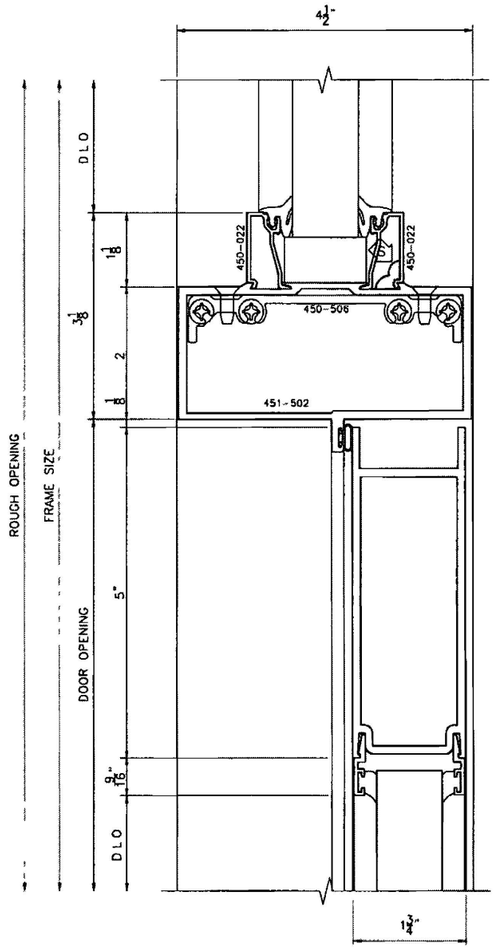

2	BOTTOM RAIL	
12 A6.1	500 WIDE STILE	FULL

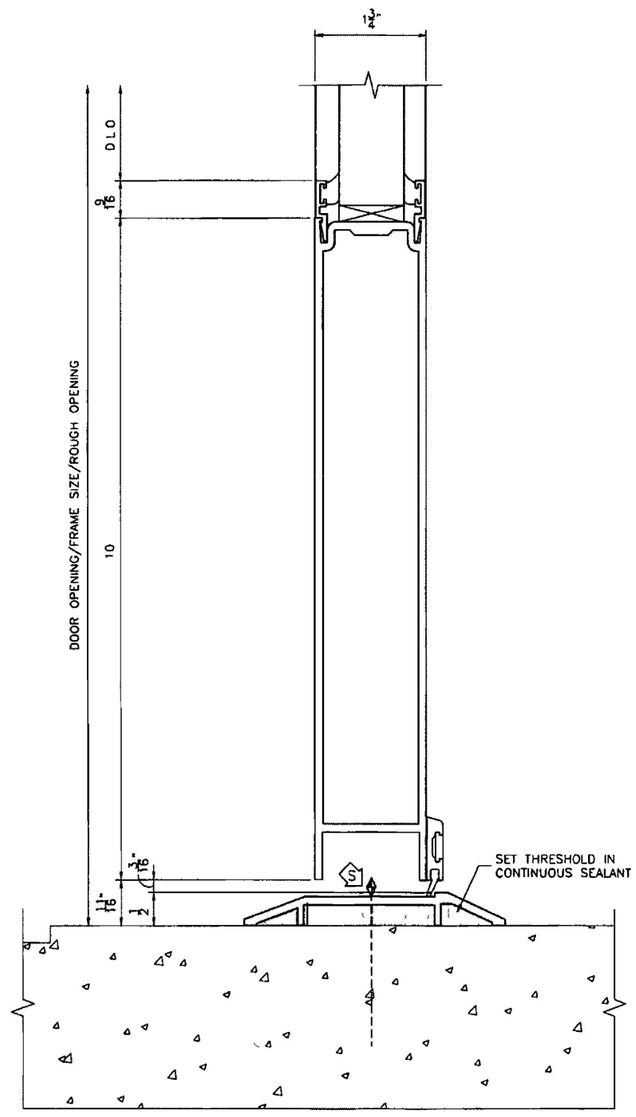

3	HEAD	
	451T CG	FULL

SIM TO 4/A6.20

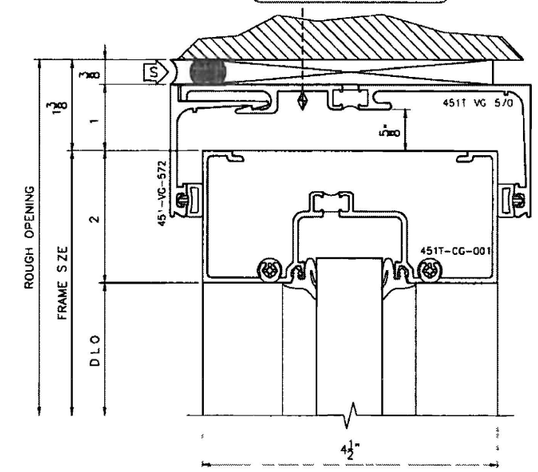

City of Portland
Bureau of
Development Services
By MG Date 8/1/11
Approved by
Planning & Zoning Review

City of Portland
REVIEWED FOR CODE
COMPLIANCE
OCT 31 2011
Permit Number

PERIMETER SUBSTRATE SHOWN
THAT IS NOT LABELED -S NOT BY
THE GLAZING SUB CONTRACTOR

DRAFTING LTS ENGINEERING

WWW LTSDRAFTING COM

6855 SOUTH HAVANA STREET SUITE 580
CENTENNIAL, CO 80112
Phone (303) 858-9858
Fax (303) 858-8373
Email info@ltsdrafting com

REVISIONS

ARCHITECT

MICHAEL WILLIS
ARCHITECTS
70 NW COUCH STREET
PORTLAND OR 97209
503 973 5151

GLAZING SUBCONTRACTOR

CAPITOL CITY GLASS

1450 FRONT NE
SALEM OREGON 97303
503.581 2559

SHOP DRAWINGS FOR

PORTLAND FIRE
& RESCUE STATION 31

1927 SE 174TH AVENUE
PORTLAND OR 97233

SHEET DESCRIPTION

STOREFRONT
DETAIL SHEET

PROJECT	10-0257
SCALE	FULL
DATE	12 16 10

SHEET

504

SEE SKA-1

ARCHITECT NOTE.
PERIMETER CONDITION NOT DETAILED IN ARCHITECTURAL DRAWINGS PLEASE PROVIDE

ALUMINUM FILLER 451T-126 @ EA FASTENER LOCATION VINYL CAULK STOP AS REQ'D IN BETWEEN

1 DOOR JAMB
451T CG — FULL
500 WIDE STILE

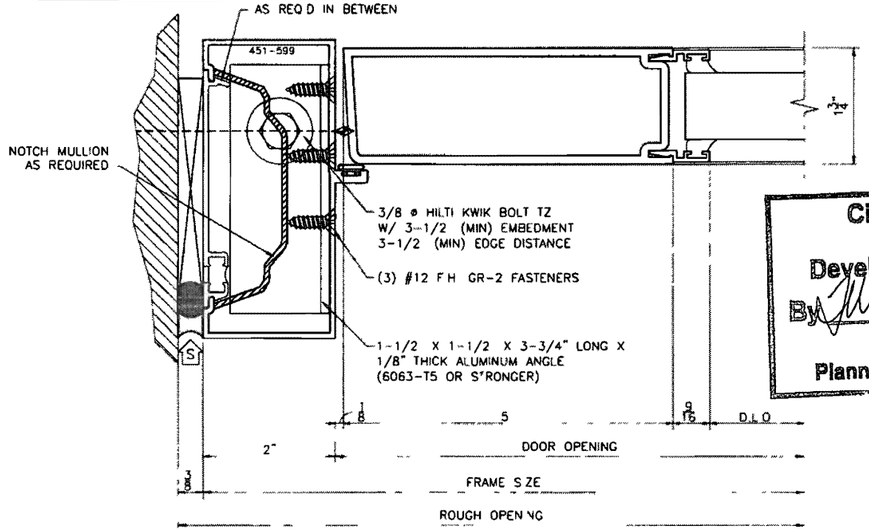

2 DOOR JAMB
451T CG — FULL
500 WIDE STILE

PERIMETER SUBSTRATE SHOWN THAT IS NOT LABELED IS NOT BY THE GLAZING SUB CONTRACTOR

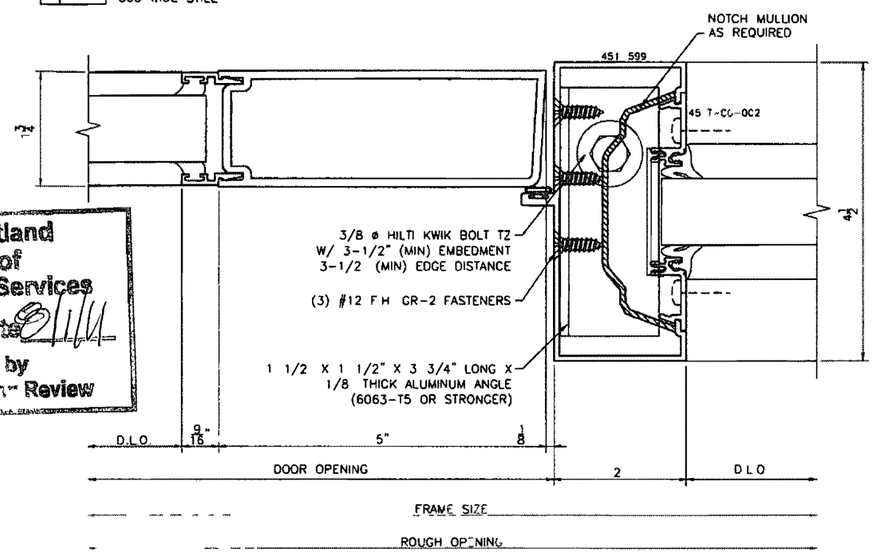

City of Portland
Bureau of Development Services
By ____ Date 8/11/11
Approved by
Planning & Zoning Review

ARCHITECT NOTE.
PERIMETER CONDITION NOT DETAILED IN ARCHITECTURAL DRAWINGS PLEASE PROVIDE

SEE SKA-2

3 TRANSOM @ JAMB
451T CG — FULL

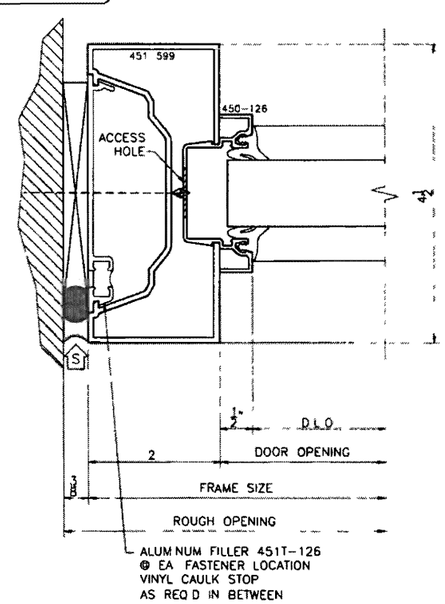

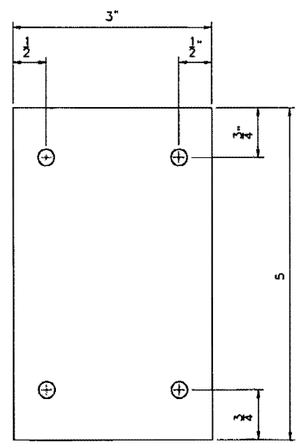

5 STRAP ANCHOR LAYOUT
FULL

3" WIDE X 5" LONG 1/8" THICK ALUM (6063-T6 OR STRONGER) STRAP ANCHOR LOCATE AS SHOW ON ELEVATIONS AS ⊟ (SEE LAYOUT DTL 5 ON THIS SHEET)

4 JAMB
8 | A6.21
451T CG — FULL

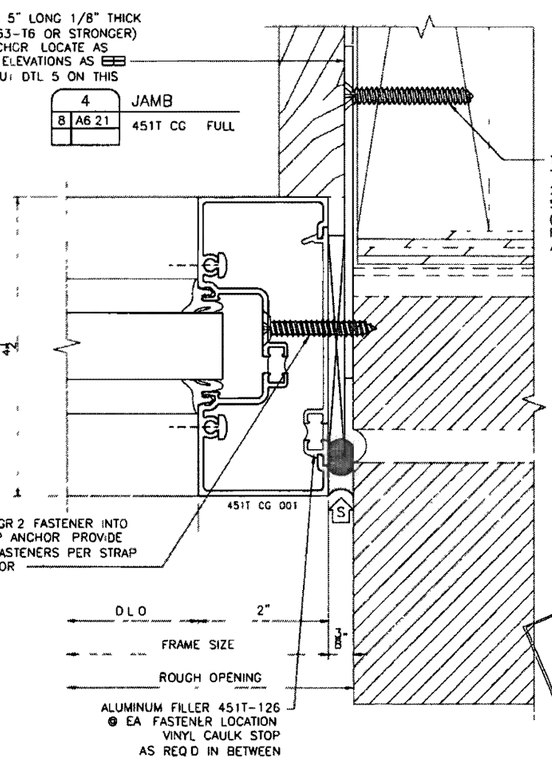

City of Portland
REVIEWED FOR CODE COMPLIANCE
OCT 31 2011
Permit Number

DRAFTING LTS ENGINEERING
WWW.LTSDRAFTING.COM
6855 SOUTH HAVANA STREET SUITE 580
CENTENNIAL, CO 80112
Phone (303) 858-9858
Fax (303) 858-8373
Email info@ltsdrafting.com

REVISIONS

ARCHITECT
MICHAEL WILLIS ARCHITECTS
70 NW COUCH STREET
PORTLAND OR 97209
503 973 5151

GLAZING SUBCONTRACTOR
CAPITOL CITY GLASS
1450 FRONT NE
SALEM, OREGON 97303
503 581 2559

SHOP DRAWINGS FOR
PORTLAND FIRE & RESCUE STATION 31
1927 SE 174TH AVENUE
PORTLAND OR 97233

SHEET DESCRIPTION
STOREFRONT DETAIL SHEET

PROJECT	10-0257
SCALE	FULL
DATE	12 16 10

SHEET

505

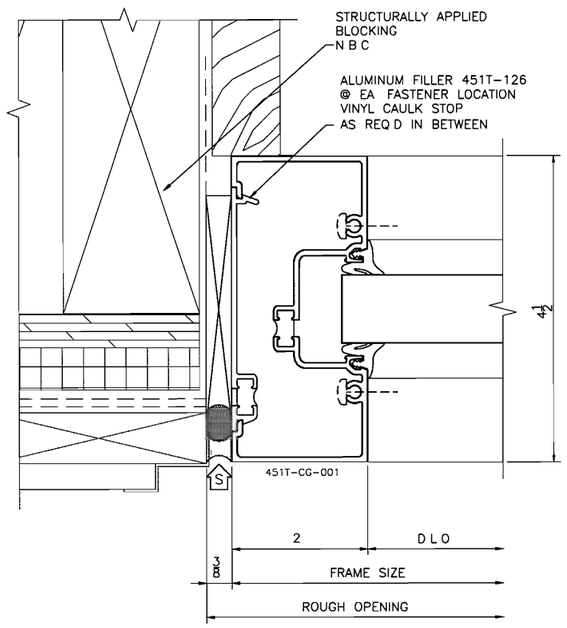

1	JAMB	
7 A6 20	451T CG	FULL

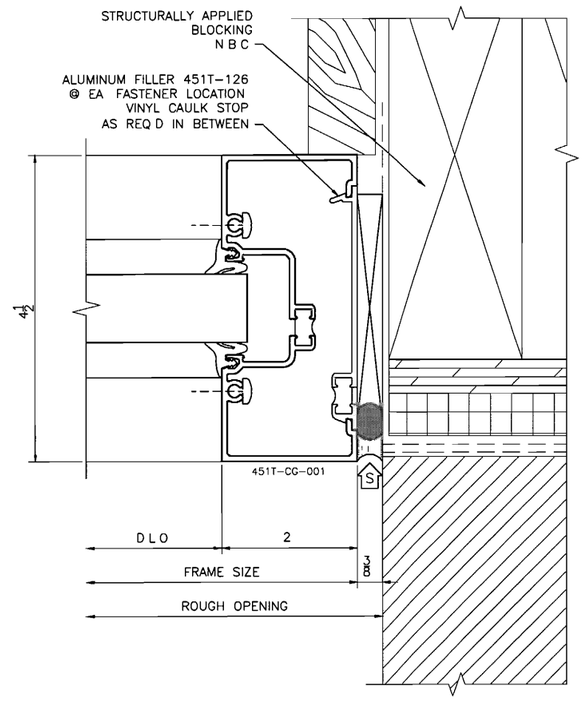

2	JAMB	
8 A6 20	451T CG	FULL

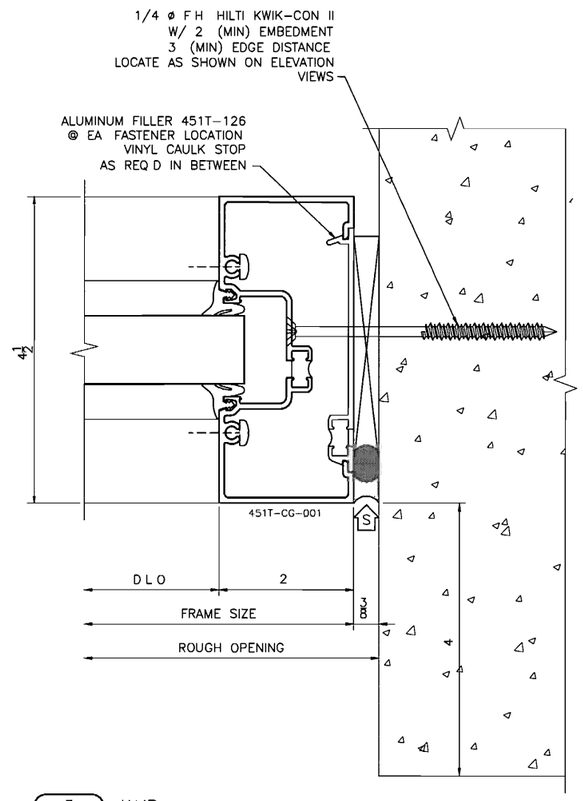

3	JAMB	
7 A6 21	451T CG	FULL

City of Portland
REVIEW
OCT 31 2011
Permit Number

PERIMETER SUBSTRATE SHOWN THAT IS NOT LABELED IS NOT BY THE GLAZING SUB CONTRACTOR

DRAFTING ENGINEERING
WWW LTSDRAFTING COM

6855 SOUTH HAVANA STREET SUITE 580
CENTENNIAL CO 80112
Phone (303) 858 9858
Fax (303) 858 8373
Email info@ltsdrafting com

REVISIONS

RECEIVED
SEP 07 2011
BDS
DOCUMENT SERVICES

ARCHITECT

MICHAEL WILLIS
ARCHITECTS
70 NW COUCH STREET
PORTLAND OR 97209
503 973 5151

GLAZING SUBCONTRACTOR

CAPITOL CITY GLASS

1450 FRONT NE
SALEM OREGON 97303
503 581 2559

SHOP DRAWINGS FOR

PORTLAND FIRE
& RESCUE STATION 31

1927 SE 174TH AVENUE
PORTLAND OR 97233

SHEET DESCRIPTION

STOREFRONT
DETAIL SHEET

PROJECT	10 0257
SCALE	FULL
DATE	12 16 10

SHEET

506

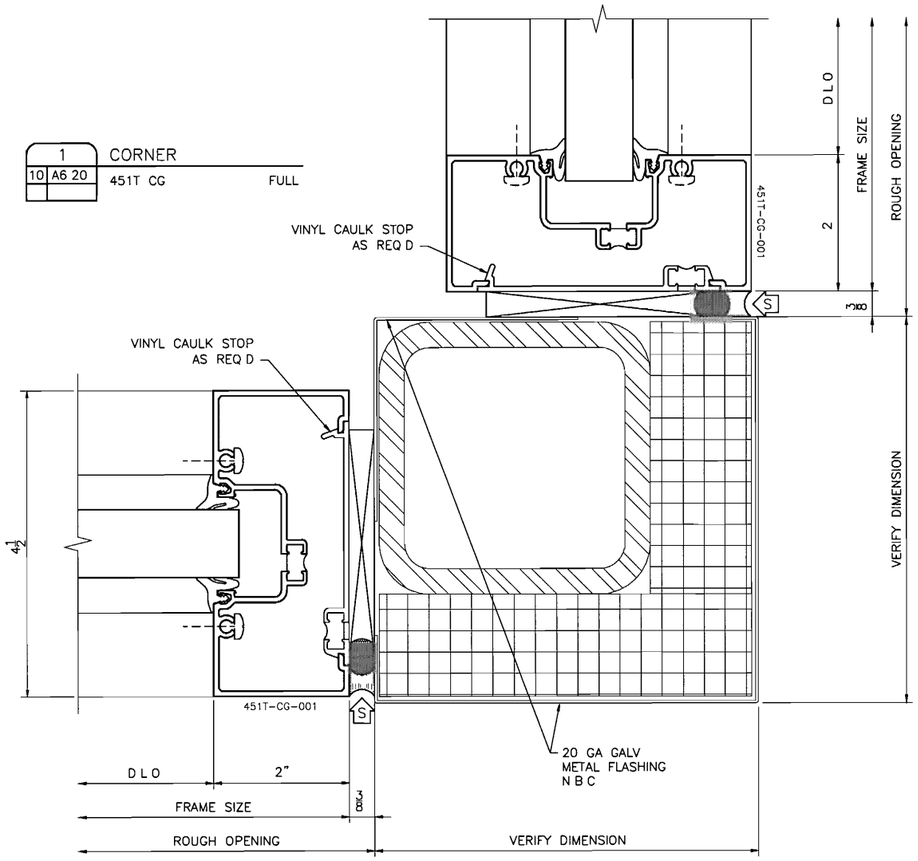

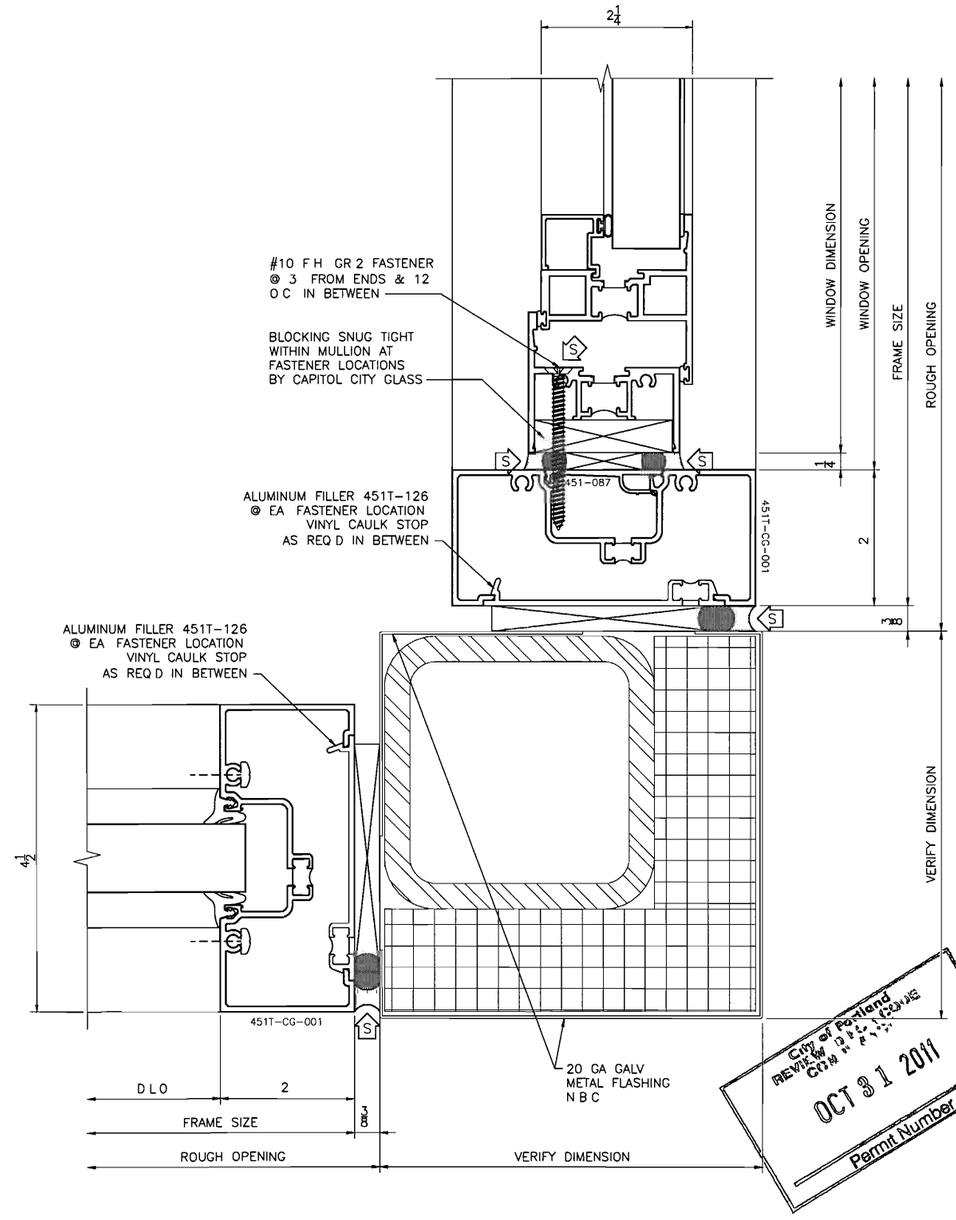

2 | 10 A6 20 | CORNER | 451T CG 8225TL PO | FULL

PERIMETER SUBSTRATE SHOWN THAT IS NOT LABELED IS NOT BY THE GLAZING SUB CONTRACTOR

City of Portland
REVIEW & DISTRIBUTION
CITY ARCHIVES
OCT 31 2011
Permit Number

DRAFTING LTS ENGINEERING
WWW LTSDRAFTING COM

6855 SOUTH HAVANA STREET SUITE 580
CENTENNIAL CO 80112
Phone (303) 858 9858
Fax (303) 858 8373
Email info@ltsdrafting com

REVISIONS

RECEIVED
SEP 07 2011
DDS
DOCUMENT SERVICES

ARCHITECT

MICHAEL WILLIS
ARCHITECTS
70 NW COUCH STREET
PORTLAND OR 97209
503 973 5151

GLAZING SUBCONTRACTOR

CAPITOL CITY GLASS

1450 FRONT NE
SALEM OREGON 97303
503 581 2559

SHOP DRAWINGS FOR

PORTLAND FIRE
& RESCUE STATION 31

1927 SE 174TH AVENUE
PORTLAND OR 97233

SHEET DESCRIPTION

STOREFRONT
DETAIL SHEET

PROJECT	10-0257
SCALE	FULL
DATE	12 16 10

SHEET

507

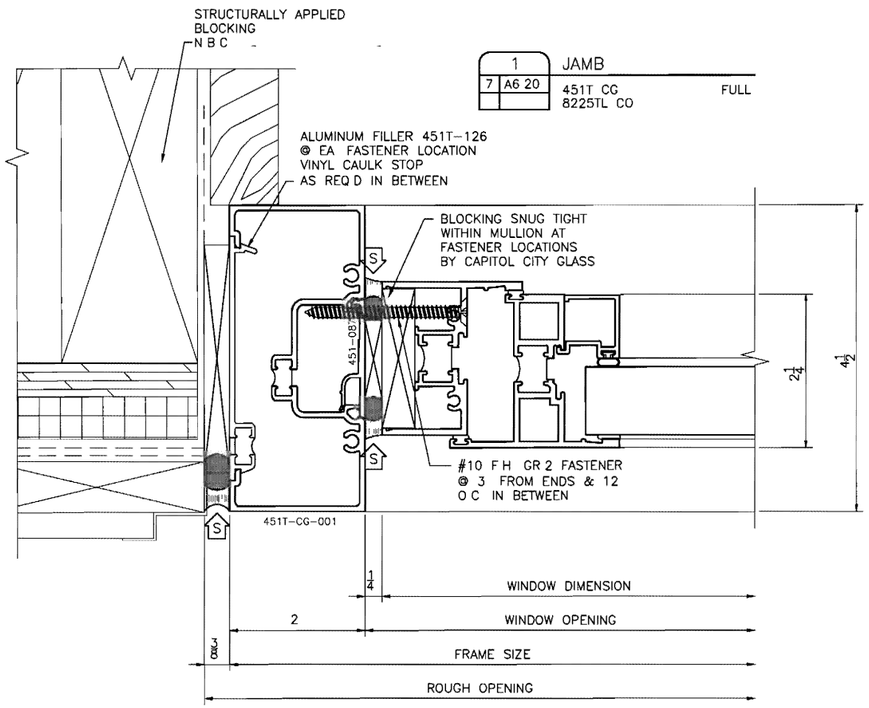

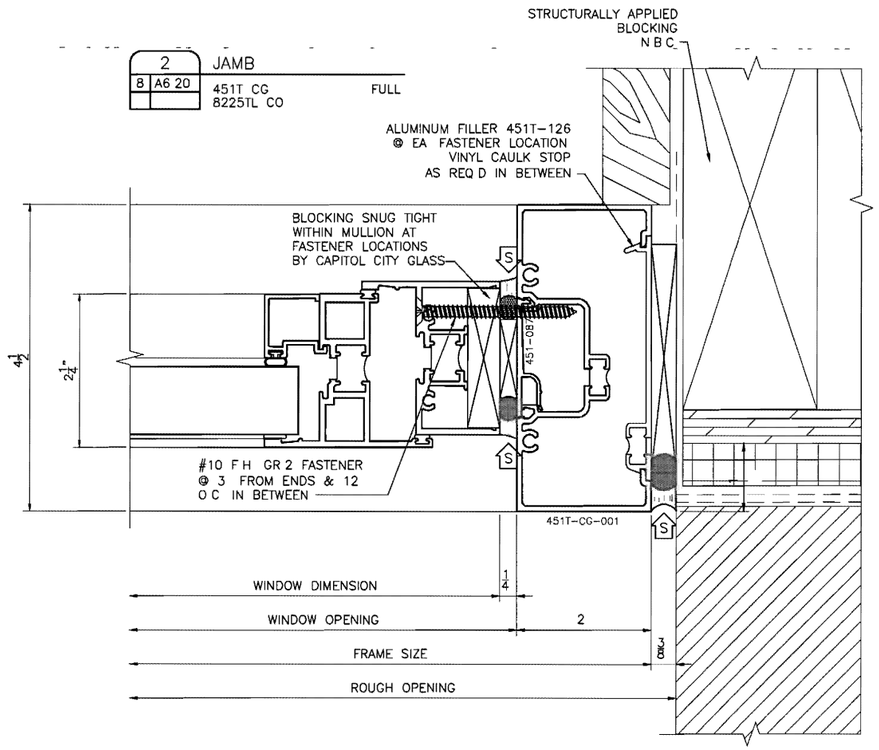

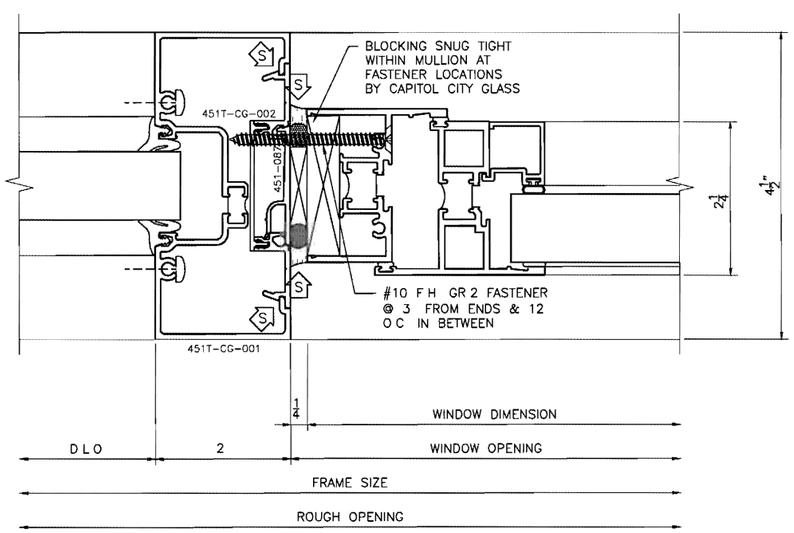

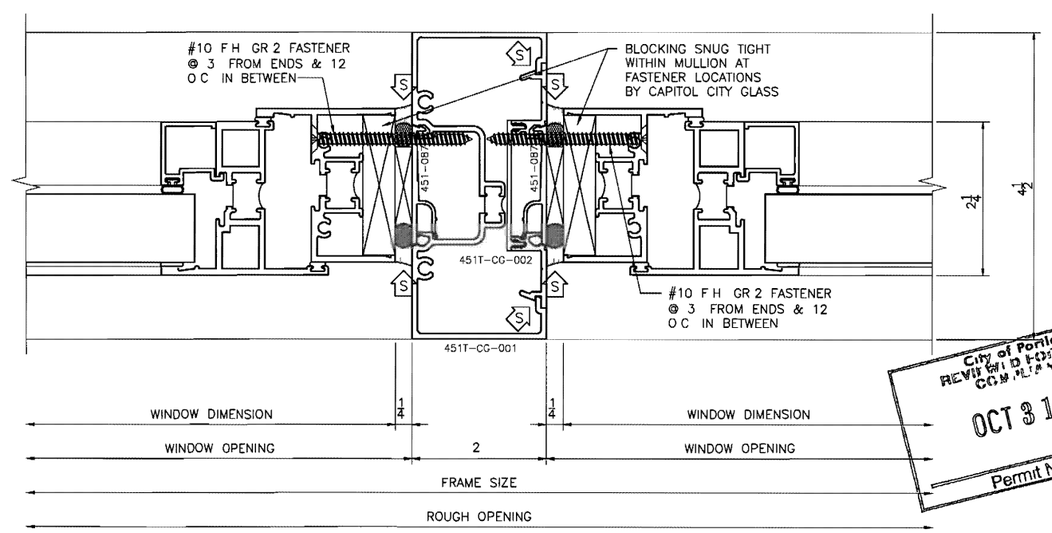

PERIMETER SUBSTRATE SHOWN THAT IS NOT LABELED IS NOT BY THE GLAZING SUB CONTRACTOR

City of Portland REVIEWED FOR CODE COMPLIANCE OCT 31 2011 Permit Number

DRAFTING ENGINEERING
WWW LTSDRAFTING COM

6855 SOUTH HAVANA STREET SUITE 580
CENTENNIAL CO 80112
Phone (303) 858 9858
Fax (303) 858 8373
Email info@ltsdrafting com

REVISIONS

RECEIVED
SEP 07 2011
BDS
DOCUMENT SERVICES

ARCHITECT

MICHAEL WILLIS
ARCHITECTS
70 NW COUCH STREET
PORTLAND OR 97209
503 973 5151

GLAZING SUBCONTRACTOR

CAPITOL CITY GLASS

1450 FRONT NE
SALEM OREGON 97303
503 581 2559

SHOP DRAWINGS FOR

PORTLAND FIRE
& RESCUE STATION 31

1927 SE 174TH AVENUE
PORTLAND OR 97233

SHEET DESCRIPTION

STOREFRONT
DETAIL SHEET

PROJECT	10 0257
SCALE	FULL
DATE	12 16 10

SHEET

508

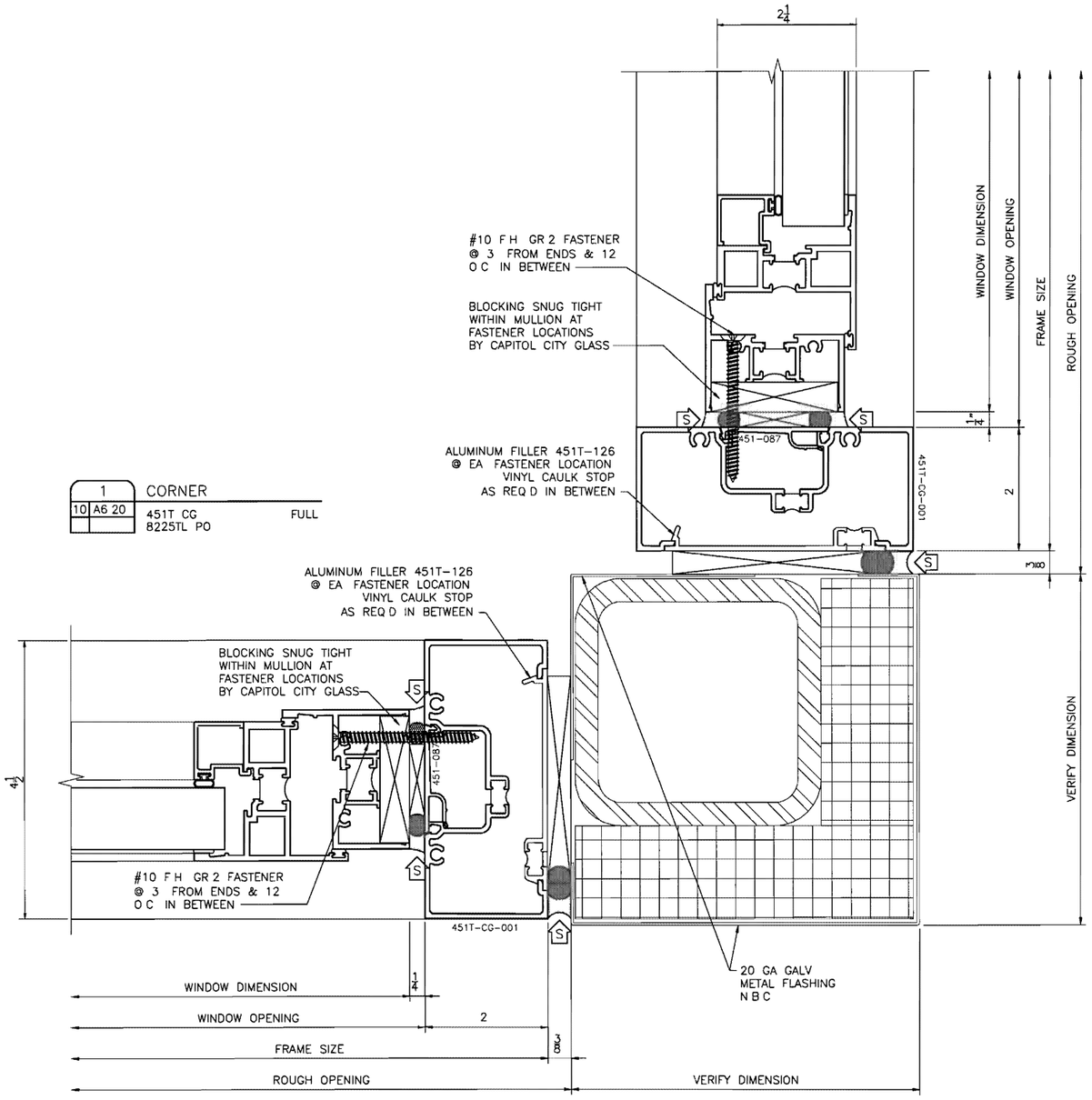

1 CORNER

10 A6 20	451T CG 8225TL PO	FULL

2 HEAD

	451T CG 8225TL PO	FULL

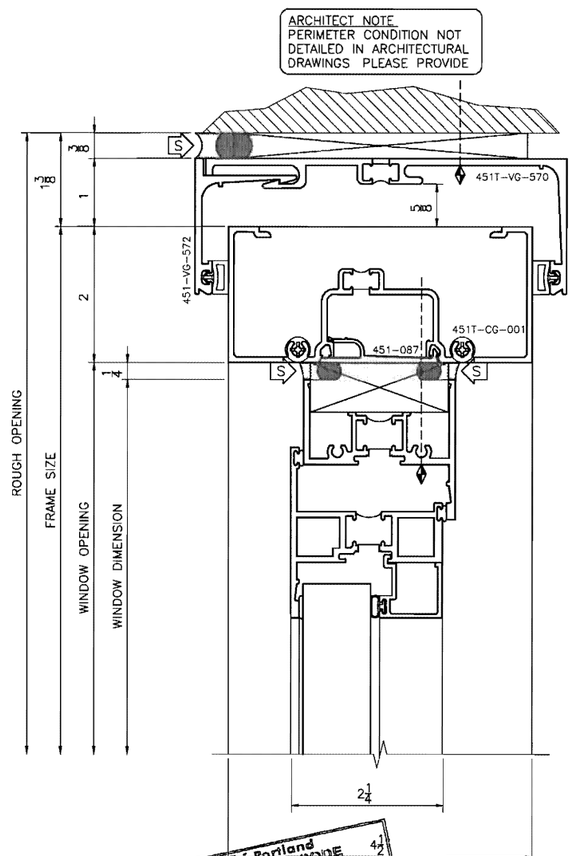

PERIMETER SUBSTRATE SHOWN THAT IS NOT LABELED IS NOT BY THE GLAZING SUB CONTRACTOR

City of Portland
REVIEWED FOR CODE COMPLIANCE
OCT 31 2011
Permit Number

DRAFTING LTS ENGINEERING
WWW LTSDRAFTING COM

6855 SOUTH HAVANA STREET SUITE 580
CENTENNIAL CO 80112
Phone (303) 858 9858
Fax (303) 858 8373
Email info@ltsdrafting com

REVISIONS

RECEIVED
SEP 07 2011
BDS
DOCUMENT SERVICES

ARCHITECT

MICHAEL WILLIS
ARCHITECTS
70 NW COUCH STREET
PORTLAND OR 97209
503 973 5151

GLAZING SUBCONTRACTOR

CAPITOL CITY GLASS

1450 FRONT NE
SALEM OREGON 97303
503 581 2559

SHOP DRAWINGS FOR

PORTLAND FIRE
& RESCUE STATION 31

1927 SE 174TH AVENUE
PORTLAND OR 97233

SHEET DESCRIPTION

STOREFRONT
DETAIL SHEET

PROJECT	10 0257
SCALE	FULL
DATE	12 16 10

SHEET

509

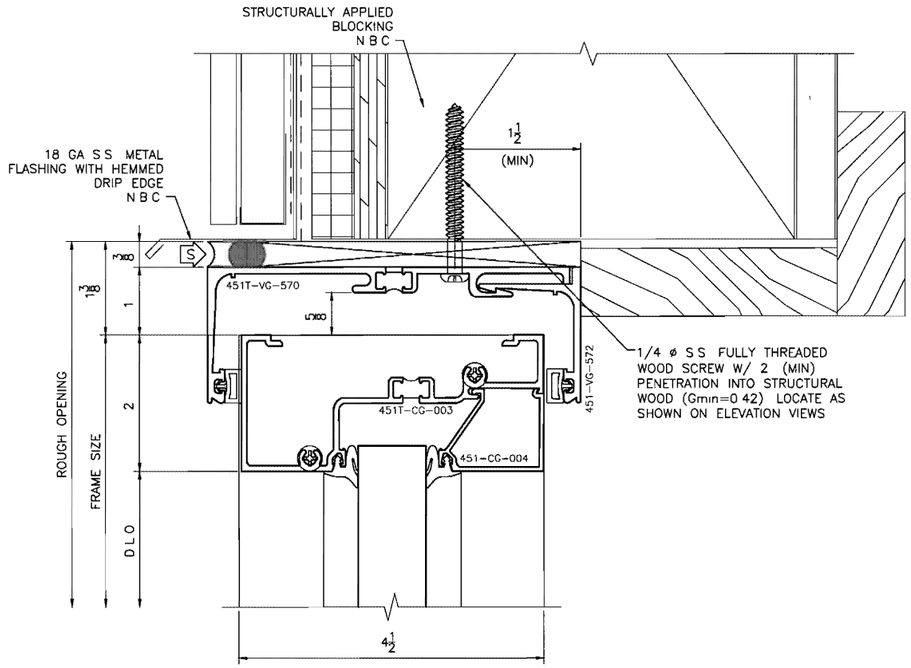

1	HEAD	
3 A6 20	451T CG	FULL
2 A6 21		

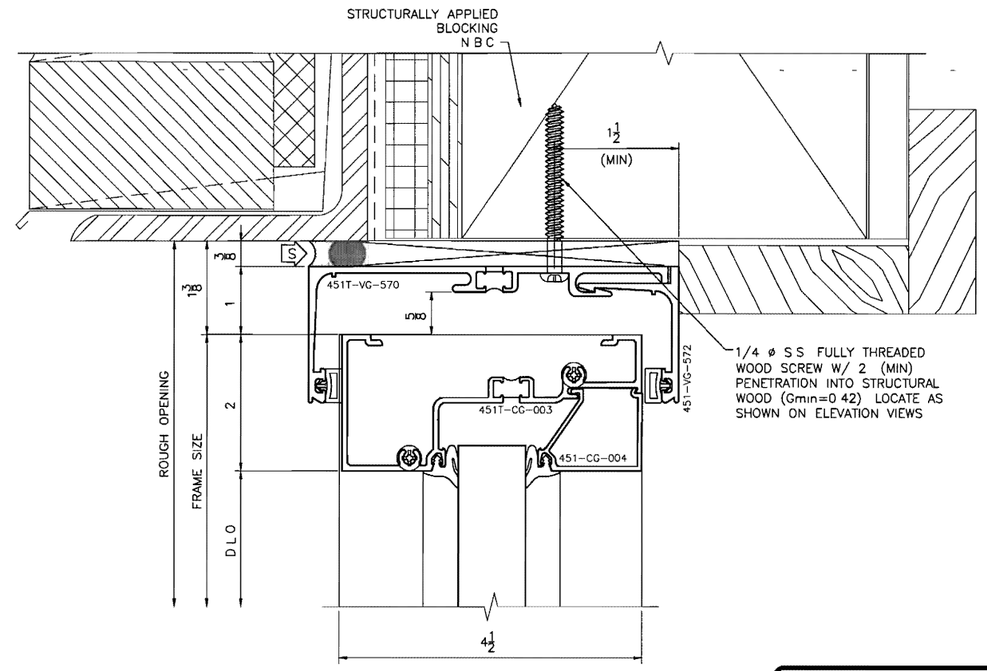

3	HEAD	
4 A6 20	451T CG	FULL

PERIMETER SUBSTRATE SHOWN THAT IS NOT LABELED IS NOT BY THE GLAZING SUB CONTRACTOR

2	SILL	
11 A6 20	451T CG	FULL

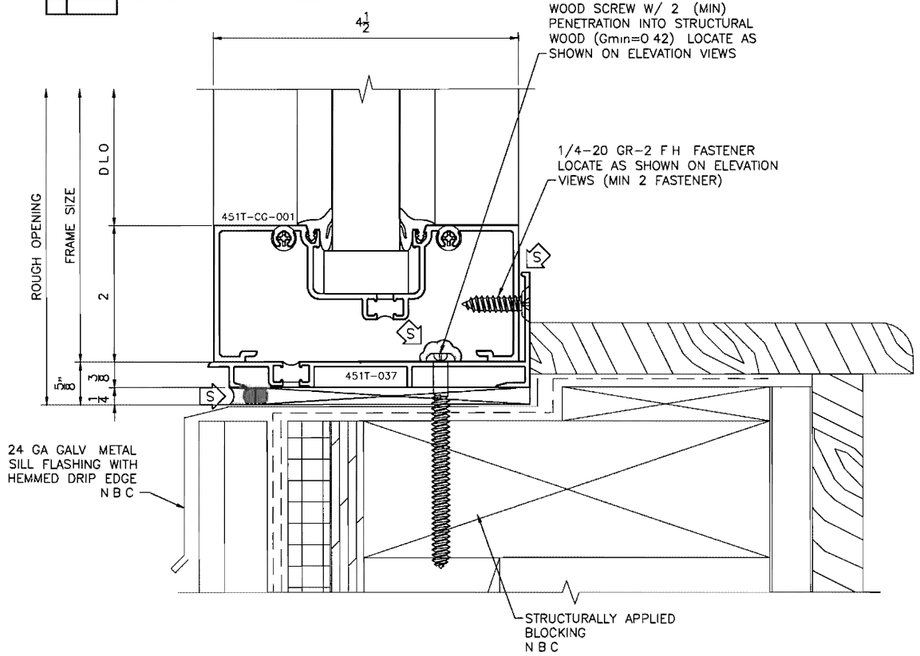

4	SILL	
12 A6 20	451T CG	FULL

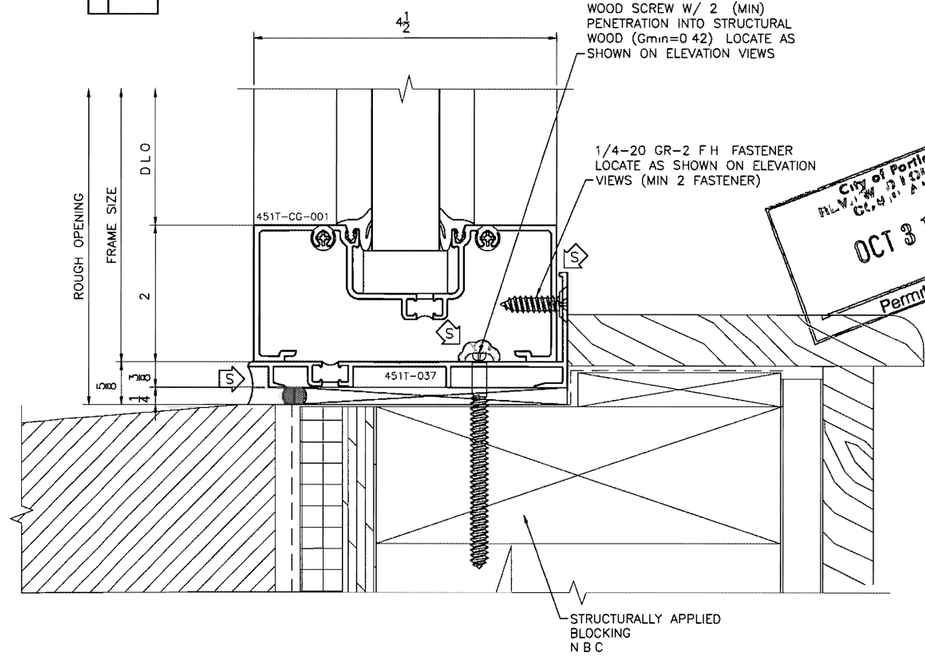

RECEIVED
SEP 07 2011
BDS
DOCUMENT SERVICES

City of Portland
BUREAU OF DEVELOPMENT SERVICES
OCT 31 2011
Permit Number

DRAFTING LTS ENGINEERING
WWW LTSDRAFTING COM
6855 SOUTH HAVANA STREET SUITE 580
CENTENNIAL CO 80112
Phone (303) 858 9858
Fax (303) 858 8373
Email info@ltsdrafting com

REVISIONS

ARCHITECT

MICHAEL WILLIS
ARCHITECTS
70 NW COUCH STREET
PORTLAND OR 97209
503 973 5151

GLAZING SUBCONTRACTOR

CAPITOL CITY GLASS

1450 FRONT NE
SALEM OREGON 97303
503 581 2559

SHOP DRAWINGS FOR

PORTLAND FIRE & RESCUE STATION 31

1927 SE 174TH AVENUE
PORTLAND OR 97233

SHEET DESCRIPTION

STOREFRONT DETAIL SHEET

PROJECT	10-0257
SCALE	FULL
DATE	12 16 10

SHEET

510

1	HEAD	
3 A6 20	451T CG 8225TL CO	FULL

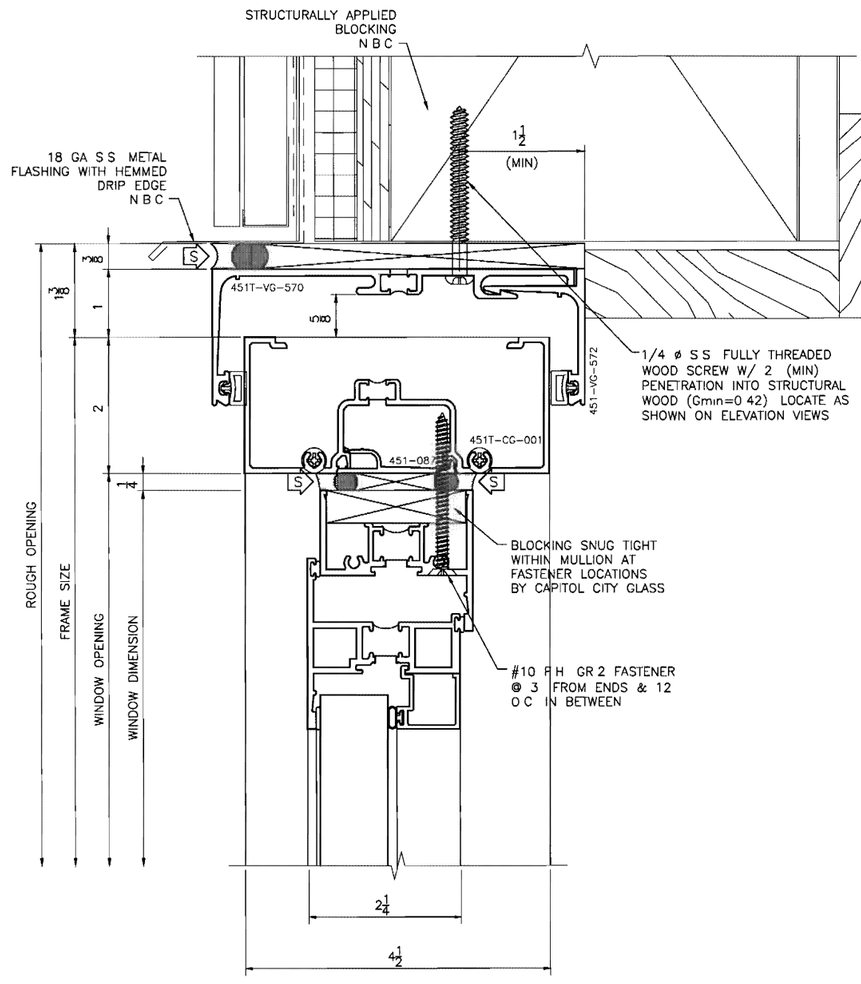

2	SILL	
11 A6 20	451T CG 8225TL CO	FULL

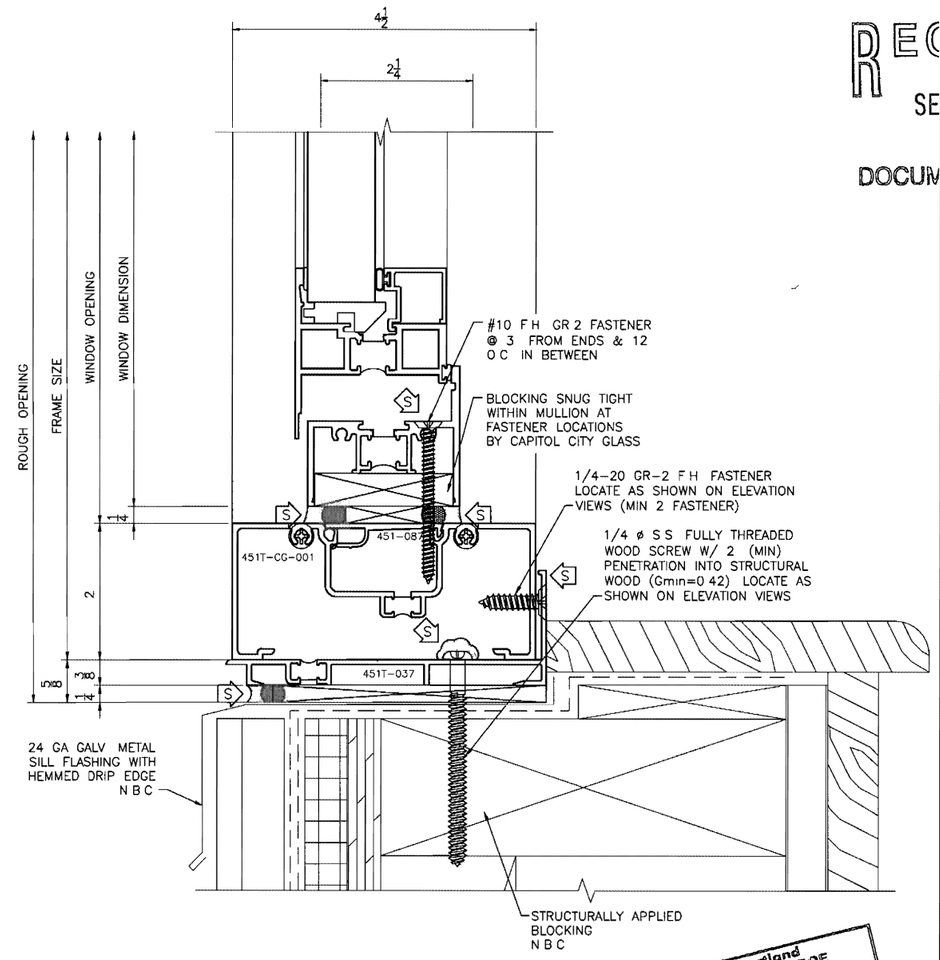

City of Portland
REVIEWED FOR CODE COMPLIANCE
OCT 31 2011
PERMIT NUMBER

PERIMETER SUBSTRATE SHOWN THAT IS NOT LABELED IS NOT BY THE GLAZING SUB CONTRACTOR

DRAFTING LTS ENGINEERING
WWW LTSDRAFTING COM
6855 SOUTH HAVANA STREET SUITE 580
CENTENNIAL CO 80112
Phone (303) 858 9858
Fax (303) 858 8373
Email info@ltsdrafting com

REVISIONS

RECEIVED
SEP 07 2011
BDS
DOCUMENT SERVICES

ARCHITECT

MICHAEL WILLIS
ARCHITECTS
70 NW COUCH STREET
PORTLAND OR 97209
503 973 5151

GLAZING SUBCONTRACTOR

CAPITOL CITY GLASS

1450 FRONT NE
SALEM OREGON 97303
503 581 2559

SHOP DRAWINGS FOR

PORTLAND FIRE
& RESCUE STATION 31

1927 SE 174TH AVENUE
PORTLAND OR 97233

SHEET DESCRIPTION

STOREFRONT
DETAIL SHEET

PROJECT	10 0257
SCALE	FULL
DATE	12 16 10

SHEET

511

1	HEAD
4 A6 20	451T CG FULL 8225TL CO/PO

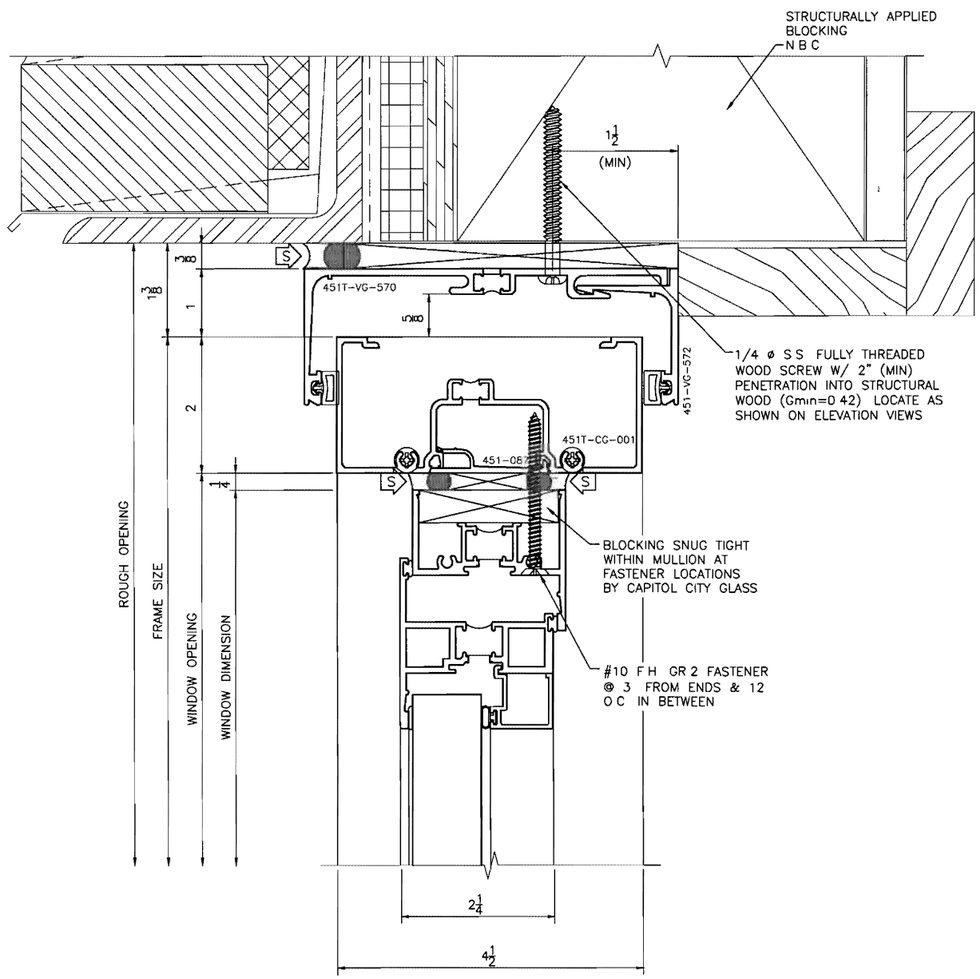

2	SILL
12 A6 20	451T CG FULL 8225TL CO/PO

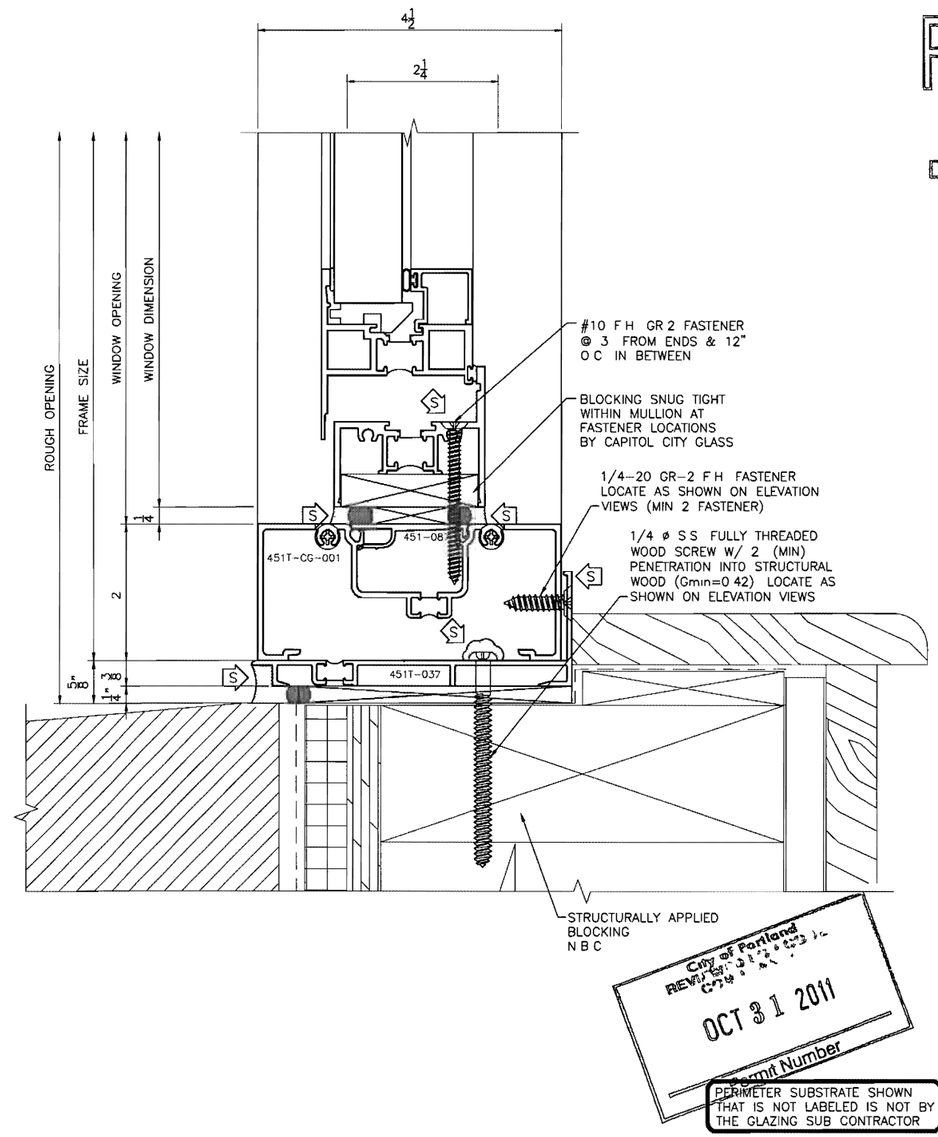

City of Portland
REVIEWED FOR CODE COMPLIANCE
OCT 31 2011
Permit Number

PERIMETER SUBSTRATE SHOWN THAT IS NOT LABELED IS NOT BY THE GLAZING SUB CONTRACTOR

DRAFTING LTS ENGINEERING
WWW LTSDRAFTING COM

6855 SOUTH HAVANA STREET SUITE 580
CENTENNIAL CO 80112
Phone (303) 858 9858
Fax (303) 858 8373
Email info@ltsdrafting com

REVISIONS

RECEIVED
SEP 07 2011
BDS
DOCUMENT SERVICES

ARCHITECT

MICHAEL WILLIS
ARCHITECTS
70 NW COUCH STREET
PORTLAND OR 97209
503 973 5151

GLAZING SUBCONTRACTOR

CAPITOL CITY GLASS

1450 FRONT NE
SALEM OREGON 97303
503 581 2559

SHOP DRAWINGS FOR

PORTLAND FIRE
& RESCUE STATION 31

1927 SE 174TH AVENUE
PORTLAND OR 97233

SHEET DESCRIPTION

STOREFRONT
DETAIL SHEET

PROJECT	10 0257
SCALE	FULL
DATE	12 16 10

SHEET

512

1	SILL
6 A6 21	451T CG — FULL

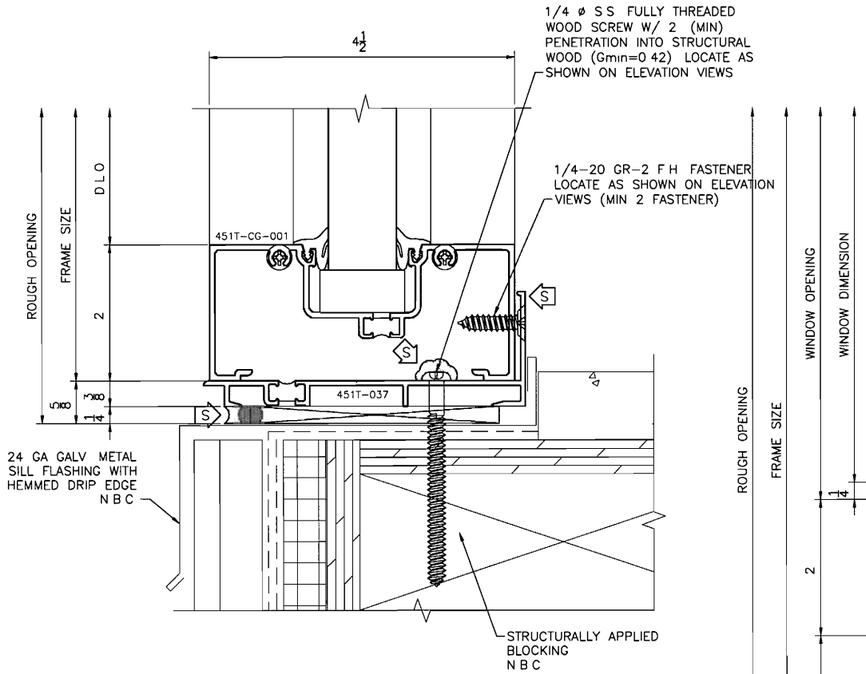

2	HORIZ
	451T CG 8225TL P0 — FULL

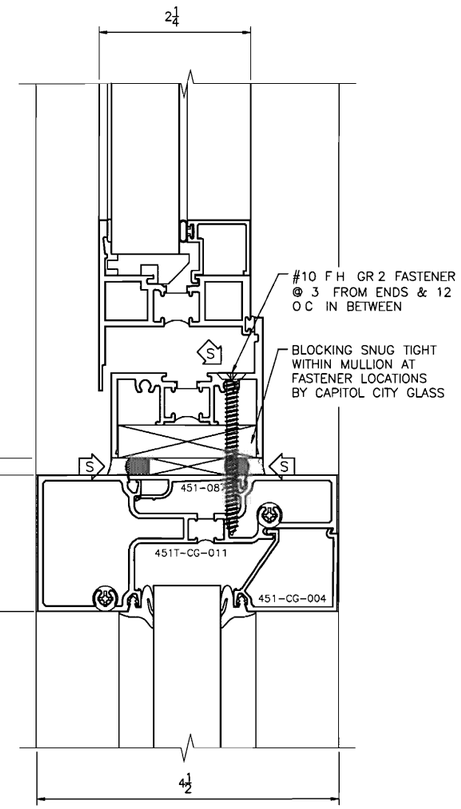

3	HORIZ
	451T CG — FULL

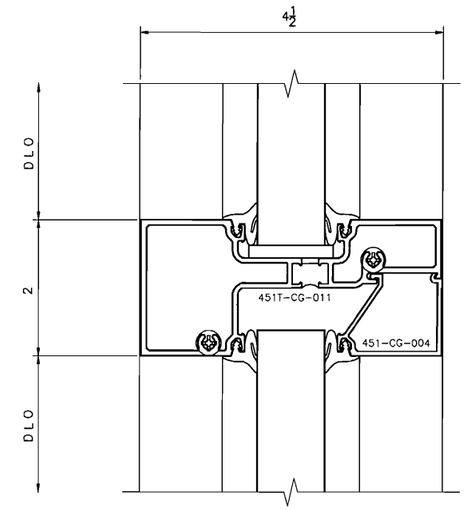

PERIMETER SUBSTRATE SHOWN THAT IS NOT LABELED IS NOT BY THE GLAZING SUB CONTRACTOR

City of Portland
REVIEWED FOR CODE COMPLIANCE
OCT 31 2011
Permit Number

DRAFTING LTS ENGINEERING
WWW LTSDRAFTING COM

6855 SOUTH HAVANA STREET SUITE 580
CENTENNIAL CO 80112
Phone (303) 858-9858
Fax (303) 858 8373
Email info@ltsdrafting com

REVISIONS

RECEIVED
SEP 07 2011
BDS
DOCUMENT SERVICES

ARCHITECT

MICHAEL WILLIS
ARCHITECTS
70 NW COUCH STREET
PORTLAND OR 97209
503 973 5151

GLAZING SUBCONTRACTOR

CAPITOL CITY GLASS

1450 FRONT NE
SALEM OREGON 97303
503 581 2559

SHOP DRAWINGS FOR

PORTLAND FIRE
& RESCUE STATION 31

1927 SE 174TH AVENUE
PORTLAND OR 97233

SHEET DESCRIPTION

STOREFRONT
DETAIL SHEET

PROJECT	10-0257
SCALE	FULL
DATE	12 16 10

SHEET

513

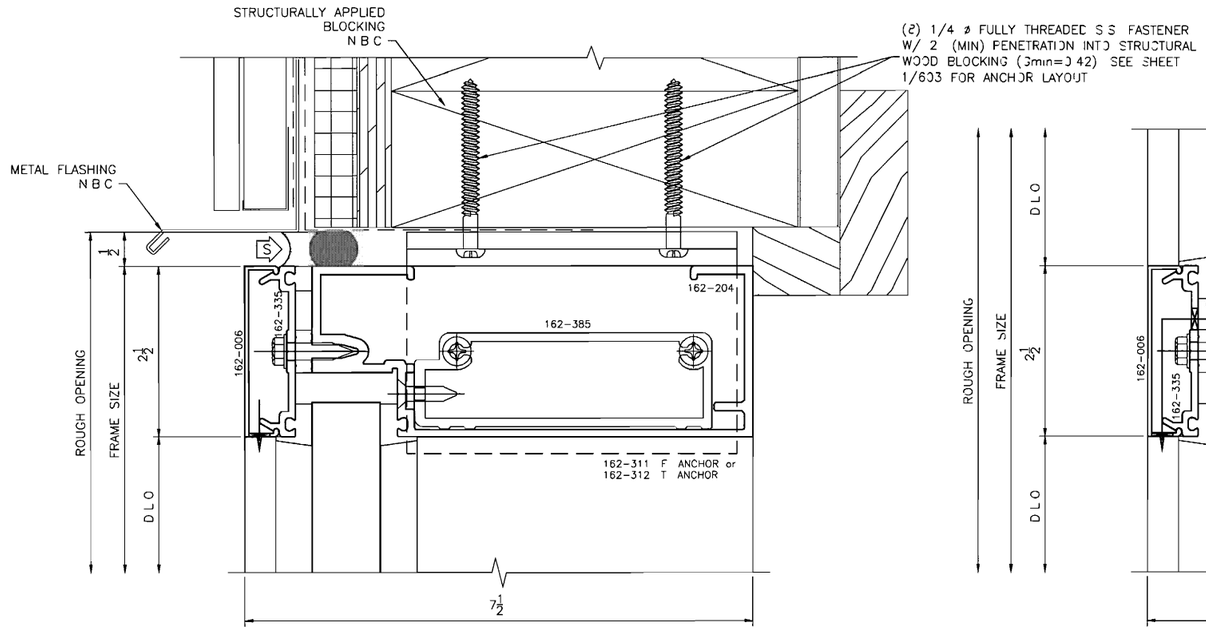

1 | A6 20 — HEAD
SYS 1 7 1/2 FULL

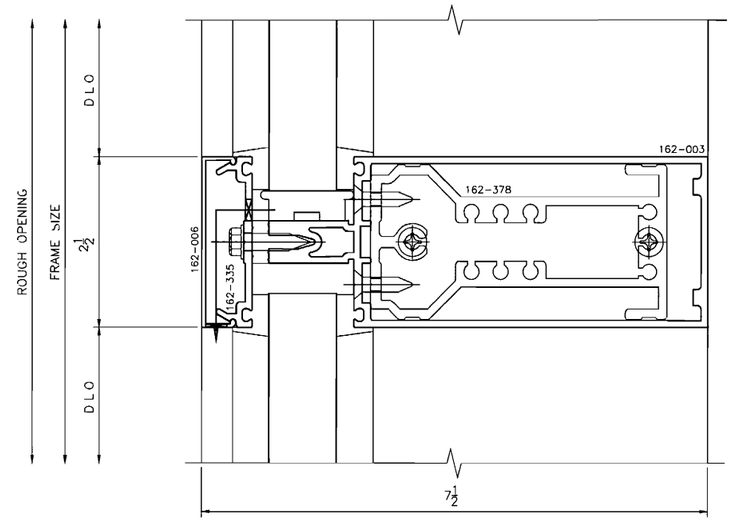

3 — HORIZ
SYS 1 7 1/2 FULL

9 | A6 20 — SILL
SYS 1 7 1/2 FULL

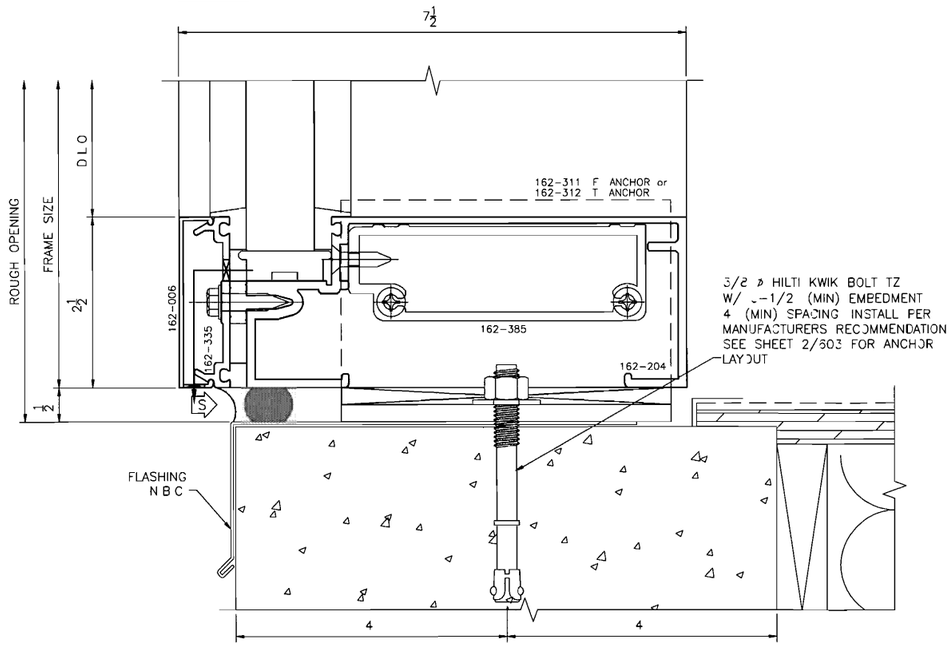

ARCHITECT NOTE
PERIMETER SUBSTRATE MUST BE CAPABLE OF WITHSTANDING REACTION FORCES IMPOSED BY WIND AND/OR DEAD LOADS

PERIMETER SUBSTRATE SHOWN THAT IS NOT LABELED IS NOT BY THE GLAZING SUB CONTRACTOR

City of Portland
REVIEWED FOR CODE COMPLIANCE
OCT 31 2011
Permit Number

DRAFTING LTS ENGINEERING
WWW LTSDRAFTING COM

6855 SOUTH HAVANA STREET SUITE 580
CENTENNIAL CO 80112
Phone (303) 858 9858
Fax (303) 858 8373
Email info@ltsdrafting com

REVISIONS

RECEIVED
SEP 07 2011
BDS
DOCUMENT SERVICES

ARCHITECT

MICHAEL WILLIS
ARCHITECTS
70 NW COUCH STREET
PORTLAND OR 97209
503 973 5151

GLAZING SUBCONTRACTOR

CAPITOL CITY GLASS

1450 FRONT NE
SALEM OREGON 97303
503 581 2559

SHOP DRAWINGS FOR

PORTLAND FIRE
& RESCUE STATION 31

1927 SE 174TH AVENUE
PORTLAND OR 97233

SHEET DESCRIPTION

CURTAIN WALL
DETAIL SHEET

PROJECT	10 0257
SCALE	FULL
DATE	12 16 10

SHEET

601

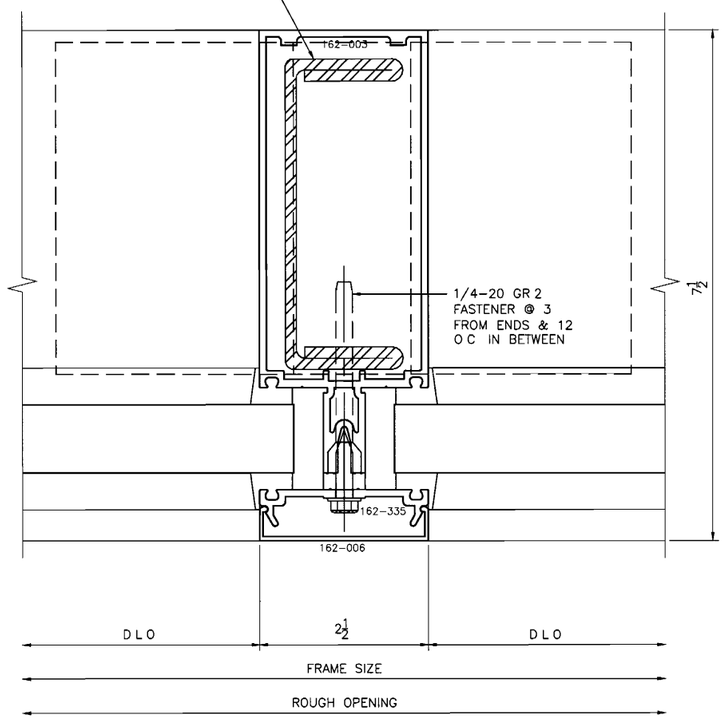

1	VERT
	SYS 1 7 1/2 FULL

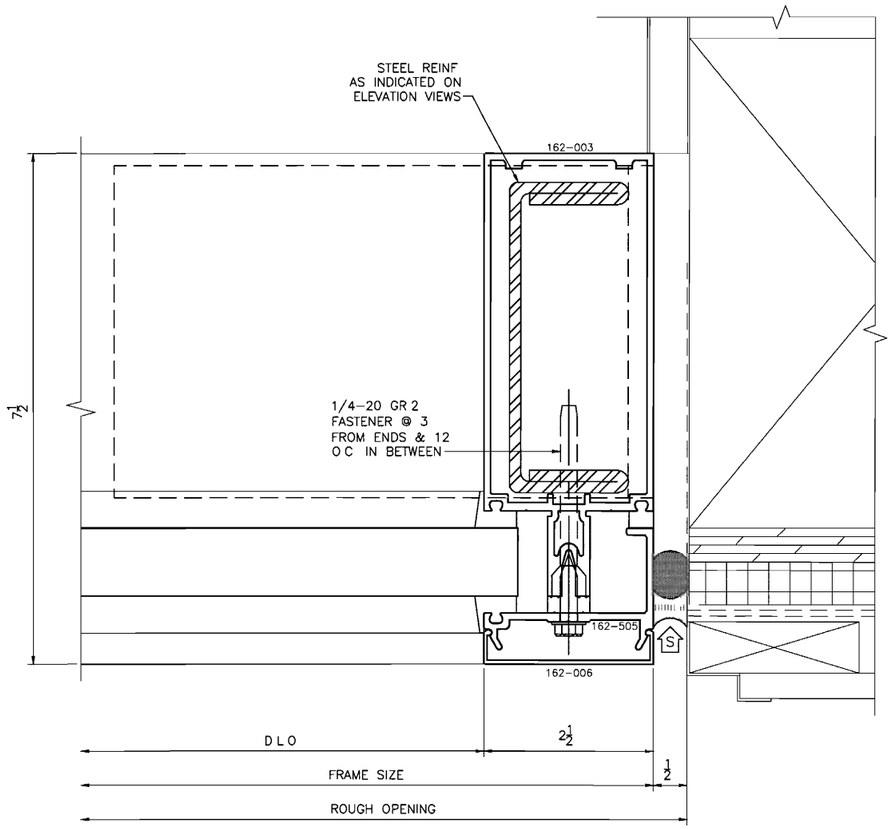

2	JAMB
5 A6 20	SYS 1 7 1/2 FULL

City of Portland
REVIEW BUILDING CODE COMPLIANCE
OCT 31 2011
Permit Number

PERIMETER SUBSTRATE SHOWN THAT IS NOT LABELED IS NOT BY THE GLAZING SUB CONTRACTOR

DRAFTING ENGINEERING
WWW LTSDRAFTING COM

6855 SOUTH HAVANA STREET SUITE 580
CENTENNIAL CO 80112
Phone (303) 858 9858
Fax (303) 858 8373
Email info@ltsdrafting com

REVISIONS

RECEIVED
SEP 07 2011
BDS
DOCUMENT SERVICES

ARCHITECT

MICHAEL WILLIS
ARCHITECTS
70 NW COUCH STREET
PORTLAND OR 97209
503 973 5151

GLAZING SUBCONTRACTOR

CAPITOL CITY GLASS

1450 FRONT NE
SALEM OREGON 97303
503 581 2559

SHOP DRAWINGS FOR

PORTLAND FIRE
& RESCUE STATION 31

1927 SE 174TH AVENUE
PORTLAND OR 97233

SHEET DESCRIPTION

CURTAIN WALL
DETAIL SHEET

PROJECT	10 0257
SCALE	FULL
DATE	12 16 10

SHEET

602

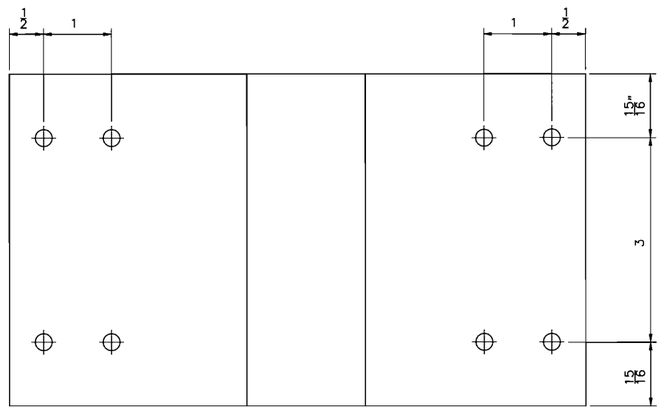

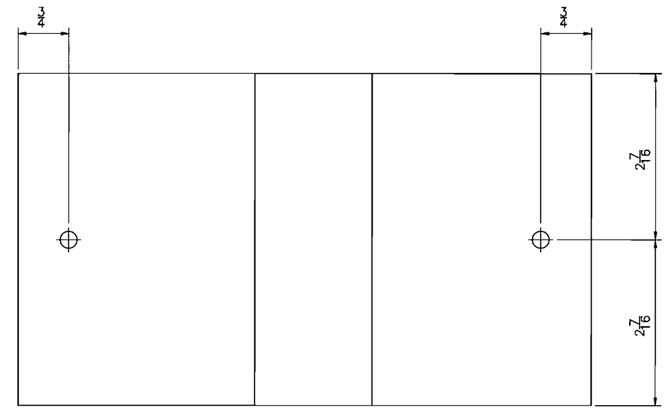

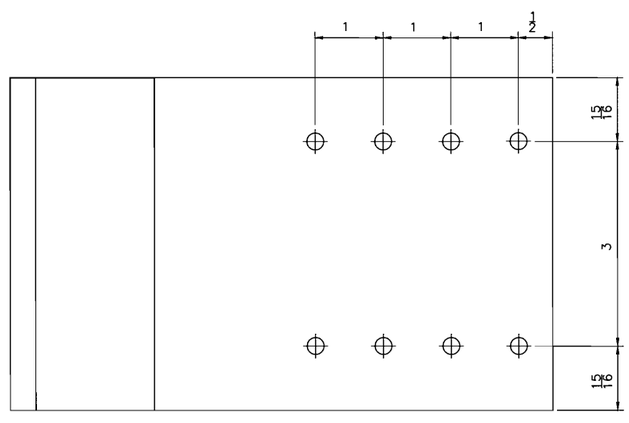

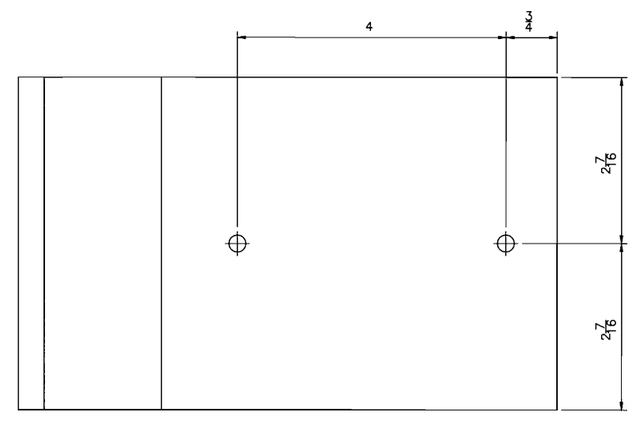

1 T & F ANCHOR LAYOUT
SYS 1 7 1/2 FULL

2 T & F ANCHOR LAYOUT
SYS 1 7 1/2 FULL

City of Portland
REVIEWED FOR CODE COMPLIANCE
OCT 31 2011
Permit Number

PERIMETER SUBSTRATE SHOWN THAT IS NOT LABELED IS NOT BY THE GLAZING SUB CONTRACTOR

DRAFTING LTS ENGINEERING
WWW LTSDRAFTING COM

6855 SOUTH HAVANA STREET SUITE 580
CENTENNIAL CO 80112
Phone (303) 858 9858
Fax (303) 858 8373
Email info@ltsdrafting com

REVISIONS

RECEIVED
SEP 07 2011
BDS
DOCUMENT SERVICES

ARCHITECT

MICHAEL WILLIS
ARCHITECTS
70 NW COUCH STREET
PORTLAND OR 97209
503 973 5151

GLAZING SUBCONTRACTOR

CAPITOL CITY GLASS

1450 FRONT NE
SALEM OREGON 97303
503 581 2559

SHOP DRAWINGS FOR

PORTLAND FIRE
& RESCUE STATION 31

1927 SE 174TH AVENUE
PORTLAND OR 97233

SHEET DESCRIPTION

ANCHOR LAYOUT
SHEET

PROJECT	10-0257
SCALE	FULL
DATE	12 16 10

SHEET

603

SKA-1 DOOR JAMB

NTS.

RECEIVED
SEP 07 2011
BDS
DOCUMENT SERVICES

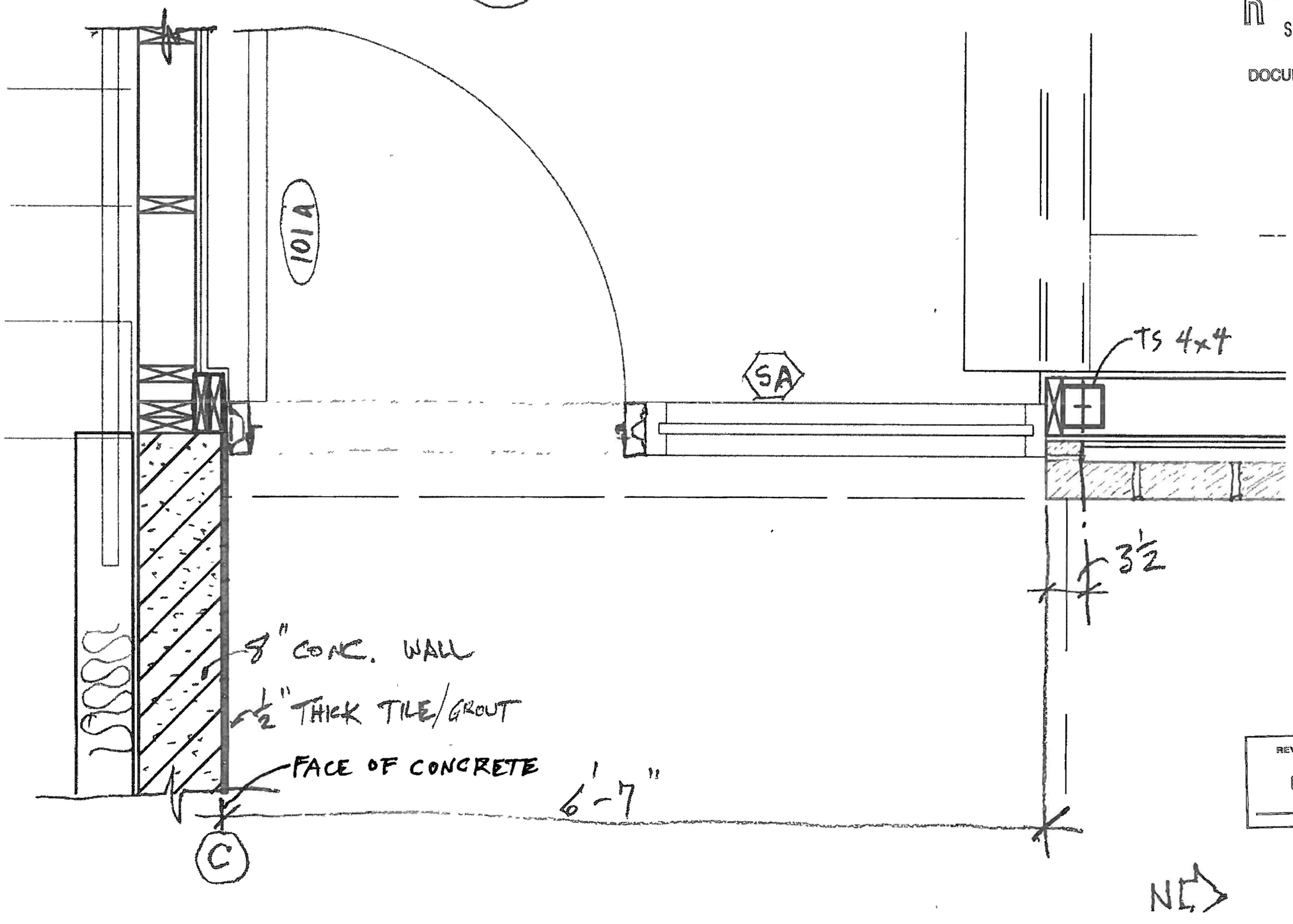

City of Portland
REVIEWED FOR CODE
COMPLIANCE
OCT 31 2011
Permit Number

RECEIVED
SEP 07 2011
BDS
DOCUMENT SERVICES

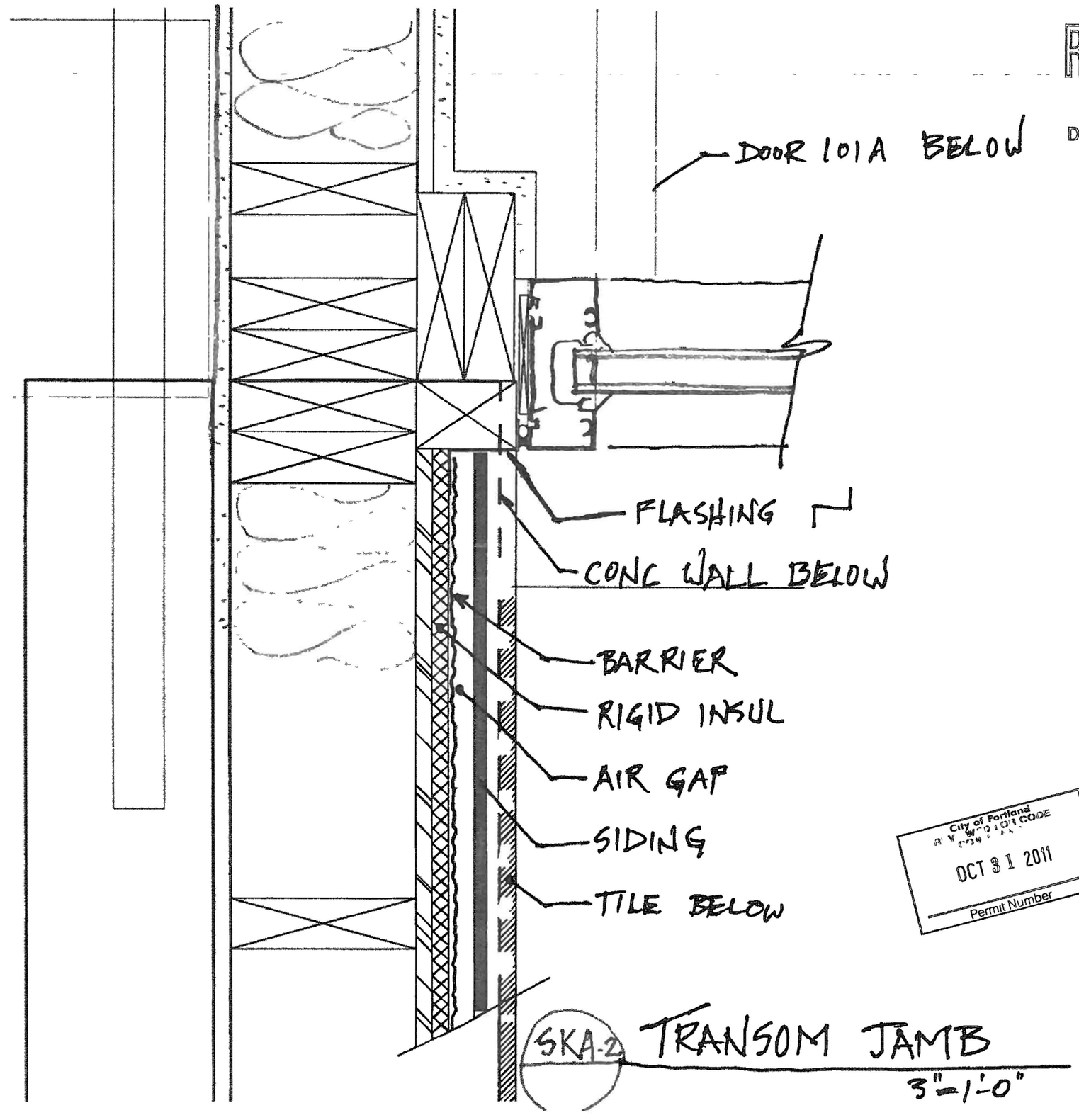

City of Portland
BUREAU OF DEVELOPMENT SERVICES
OCT 31 2011
Permit Number