SEISMIC ANCHOR CALCULATIONS

FOR

MECH UNIT
ADP PLAZA FITNESS BLDG.

2525 SW 1st AVE
PORTLAND, OR

REGISTERED PROFESSIONAL ENGINEER
OREGON
Dec. 12, 2012
ROBERT M. McCLUNG

EXPIRES: 12/14

RECEIVED
OCT 09 2013
FACILITIES PERMITS

ENGINEER WAS RETAINED IN A LIMITED CAPACITY FOR THIS PROJECT. DESIGN IS BASED UPON INFORMATION PROVIDED BY THE CLIENT WHO IS SOLELY RESPONSIBLE FOR ACCURACY OF THAT INFORMATION. NO RESPONSIBILITY AND/OR LIABILITY ARE ASSUMED BY, OR ARE TO BE ASSIGNED TO, THE ENGINEER FOR ITEMS BEYOND THAT SHOWN IN THESE CALCULATIONS.

BK INC.
STRUCTURAL ENGINEERS

2700 SE HARRISON ST. STE. B, MILWAUKIE OR, 97222, 503-607-0481, FAX 503-607-0486, robert@bkengineers.com

Project: ADP Plaza Fitness Mech Unit
Client: Hunter Davisson Proj. No.: 13-318
Date: 10/13 By: RMM Sheet No.:

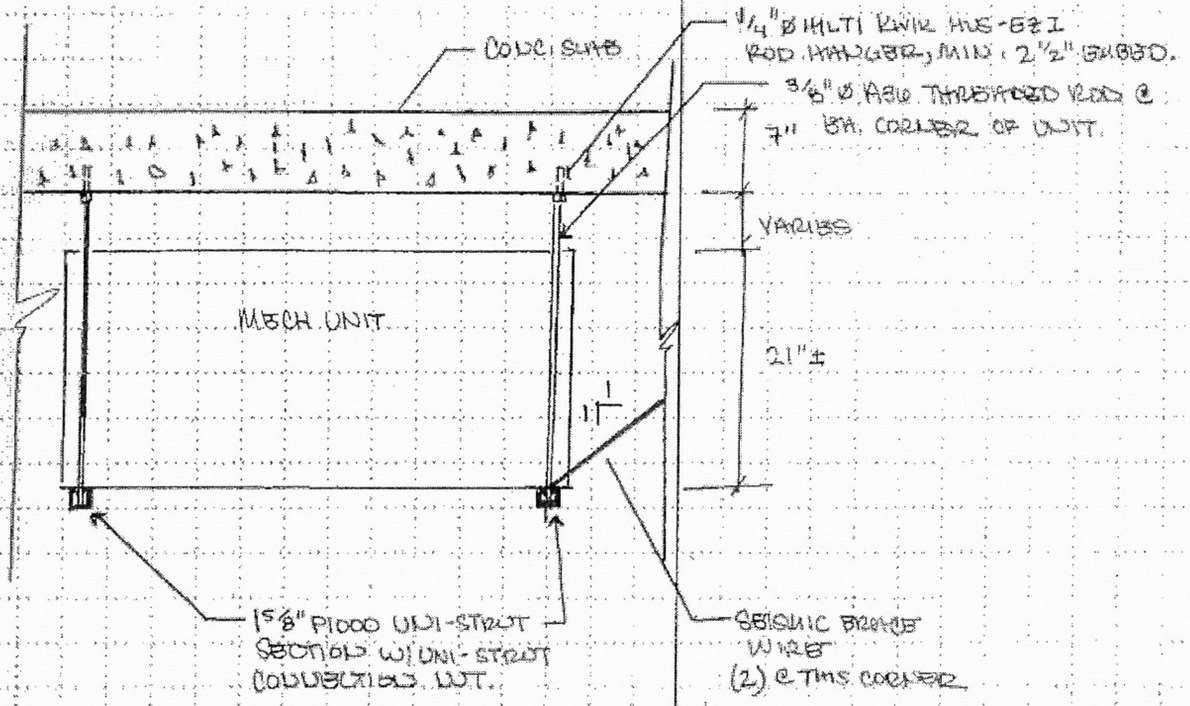

1 UNIT ELEVATION
SCALE: 3/4"=1'-0"

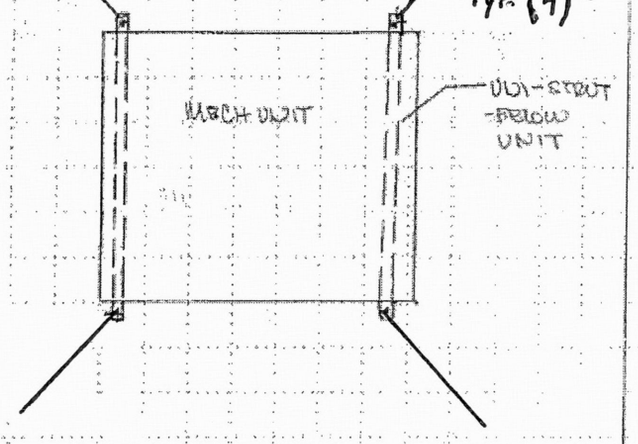

2 PLAN VIEW
SCALE: 1/2"=1'-0"

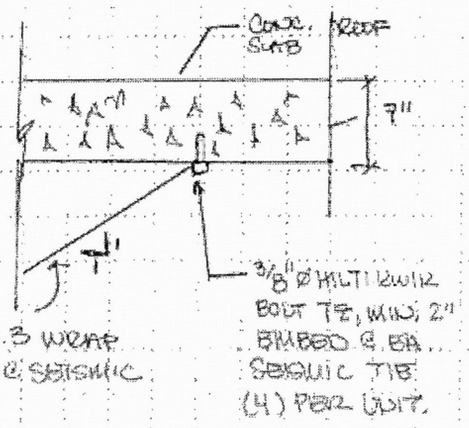

3 SEISMIC TIE
SCALE: 3/4"=1'-0"

BKE INC.
STRUCTURAL ENGINEERS

Project: ADP Plaza Fitness Mech Unit

Client: Hunter Davisson Proj. No.: 13-318

Date: 10/13 By: RMM Sheet No.:

2700 SE HARRISON ST. STE. B, MILWAUKIE OR, 97222, 503-607-0481, FAX 503-607-0486. robert@bkeengineers.com

SEISMIC ANCHOR CALCULATIONS

FOR

MECH UNIT
ADP PLAZA FITNESS BLDG.

2525 SW 1st AVE
PORTLAND, OR

REGISTERED PROFESSIONAL ENGINEER
OREGON
Dec. 12, 2012
ROBERT M. McCLUNG

EXPIRES: 12/14

ENGINEER WAS RETAINED IN A LIMITED CAPACITY FOR THIS PROJECT. DESIGN IS BASED UPON INFORMATION PROVIDED BY THE CLIENT WHO IS SOLELY RESPONSIBLE FOR ACCURACY OF THAT INFORMATION. NO RESPONSIBILITY AND/OR LIABILITY ARE ASSUMED BY, OR ARE TO BE ASSIGNED TO, THE ENGINEER FOR ITEMS BEYOND THAT SHOWN IN THESE CALCULATIONS.

BKE INC.
STRUCTURAL ENGINEERS

Project: ADP Plaza Fitness Mech Unit

Client: Hunter Davisson Proj. No.: 13-318

Date: 10/13 By: RMM Sheet No.:

2700 SE HARRISON ST. STE. B, MILWAUKIE OR, 97222, 503-607-0481, FAX 503-607-0486, robert@bkengineers.com

SEISMIC DESIGN

$I_s = 1.0$, $S_{DS} = 0.729$ $a_p = 1.0$
$R = 2.5$ $h = 7$ $W = 400\#$

$$F_p = \frac{0.4(S_{DS})(W)a_p\left(1 + 2\left(\frac{z}{h}\right)\right)}{\frac{R}{I}}$$

$$F_p = \frac{0.4(0.729)(400)(1)(1+2(1))}{\frac{2.5}{1}} = \underline{140\#}$$

GOVERNS

$F_{p\,min} = 0.3(0.729)(400)(1) = 90\#$

UNIT IS SUSPENDED FROM 7" THICK CONC. SLAB w/ 3/8" ø ALL THREAD & HILTI CONNECTIONS. UNIT SITS ON 1 5/8" UNI-STRUT SECTION. USE PULL WIRES AS SEISMIC BRACING. CHECK UNI-STRUT

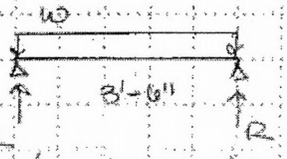

$w_u = (400/(8)(8.5))(8.5/2) = 70\#/ft$

$R = 70(8.5/2) = 125\#$
$V_{max} = 125\#$ $M_{max} = 70(8.5)^2/8 = 110\#ft$

∴ USE 1 5/8" P1000 UNI-STRUT
$M_{amp} = 428\#ft$ PER UNI-STRUT
$w_{amax} = 850\#/ft$ $l = 48"$

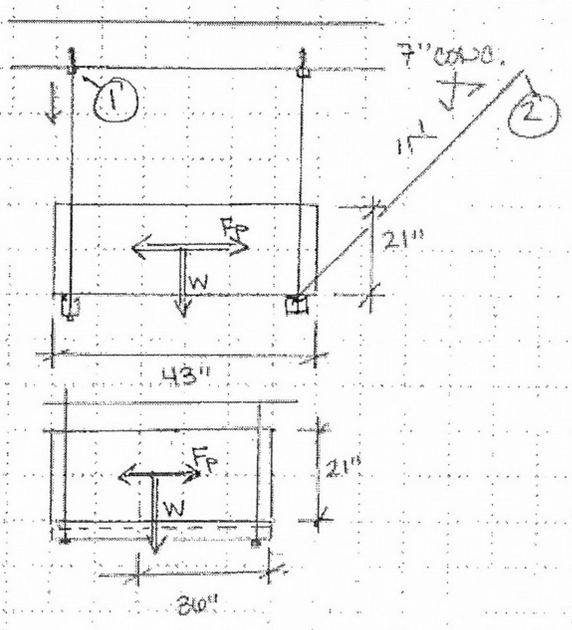

$F_p = 140\#$ $W = 400\#$

CONNECTIONS:
STANDARD UNI-STRUT $P_{max} = 1000\# > 125\#$ ∴ OK

3/8" ø A36 THREADED ROD
$A = 0.11\,in^2$ $F_t = 19.1\,ksi$
∴ $T_{amp} = 19.1(0.11) = 2.1\,k > 0.13\,k$ ∴ OK

(1) DEAD LOAD CONNECTION
$T = 125\#$

∴ USE 1/4" ø HILTI KWIK HUS-EZ I HANGER ROD, 2 1/2" EMBED
- SEE ATTACHED

BKE INC.
STRUCTURAL ENGINEERS

Project: ADP Plaza Fitness Mech Unit
Client: Hunter Davisson Proj. No.: 13-318
Date: 10/13 By: RMM Sheet No.: 1

2700 SE HARRISON ST. STE. B, MILWAUKIE OR, 97222, 503-607-0481, FAX 503-607-0486. robert@bkengineers.com

(2) SEISMIC BRACE CONNECTION

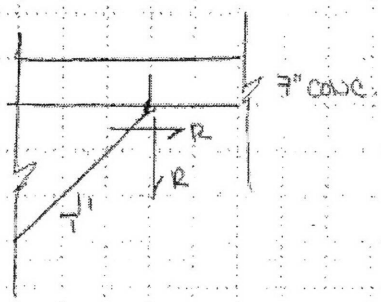

R=140#

∴ USE 3/8"Ø HILTI KWIK BOLT TZ MIN, 2" EMBED - SEE ATTACHED

R=140# ∴ $P=\sqrt{140^2+140^2}=200$#

∴ USE 12 GA. TKP. S. WRAP WIRE AS SEISMIC BRACE. T_{comp} = 270#

BKE INC.
STRUCTURAL ENGINEERS

Project: ADP Plaza Fitness Mech Unit
Client: Hunter Davisson Proj. No.: 13-318
Date: 10/13 By: RMM Sheet No.: 2

2700 SE HARRISON ST. STE. B, MILWAUKIE OR, 97222, 503-607-0481, FAX 503-607-0486, robert@bkengineers.com

HORIZONTAL UNIT DIMENSIONS

Horizontal Water Source Heat Pump

Overall unit dimensions do not include filter rack or duct flanges.

Model	A	B	C	D	E	F	G	H	J	K	M	N	P	Q	R	T	[illegible]	[illegible]
	Width	Depth	Height	[illegible]	[illegible]	[illegible]	[illegible]	[illegible]	[illegible]	[illegible]	[illegible]	[illegible]	[illegible]	[illegible]	Filter Back Inlet	Filter Back Outlet	[illegible]	[illegible]
EC007	19.00	31.00	13.25	2.00	15.00	14.00	2.38	7.38	2.25	11.75	2.00	7.75	2.25	1.88	10.00	8.00	3/4"FPT	10 × 16 × 1
EC009	19.00	31.00	13.25	2.00	15.00	14.00	2.38	7.38	2.25	11.75	2.00	7.75	2.25	1.88	10.00	8.00	3/4"FPT	10 × 16 × 1
EC012	19.00	31.00	13.25	2.00	15.00	14.00	2.38	7.38	2.50	11.75	2.00	7.75	2.25	3.00	10.00	8.00	3/4"FPT	10 × 16 × 1
EC015	21.50	43.00	17.00	2.00	17.50	23.50	2.38	13.25	4.00	11.75	2.00	9.75	2.25	2.50	16.00	14.00	3/4"FPT	16 × 20 × 1
EC018	21.50	43.00	17.00	2.00	17.50	23.50	2.38	13.25	3.50	11.75	2.00	13.75	3.50	1.75	16.00	14.00	3/4"FPT	16 × 20 × 1
EC024	21.50	43.00	19.00	2.00	17.50	23.50	2.38	12.50	3.25	11.75	3.25	13.75	3.25	1.75	18.00	16.00	3/4"FPT	18 × 20 × 1
EC030	22.00	45.00	19.00	2.00	19.50	23.50	2.38	12.50	2.50	13.75	1.50	15.75	2.50	1.50	18.00	16.00	3/4"FPT	18 × 20 × 1
EC036	22.00	54.50	19.00	2.00	29.00	23.50	2.38	14.75	2.50	13.75	1.50	15.75	2.50	1.50	18.00	16.00	3/4"FPT	18 × 30 × 1
EC041	21.50	43.00	22.00	2.00	17.50	23.50	2.38	14.75	2.50	13.75	3.00	15.75	2.50	3.50	20.00	18.00	3/4"FPT	20 × 20 × 1
EC042	22.00	54.50	19.00	2.00	29.00	23.50	2.38	14.75	2.50	13.75	1.50	15.75	2.50	1.50	18.00	16.00	3/4"FPT	18 × 30 × 1
EC048	[illegible]	[illegible]	[illegible]	[illegible]	[illegible]	[illegible]	[illegible]	[illegible]	[illegible]	[illegible]	[illegible]	[illegible]	[illegible]	[illegible]	[illegible]	[illegible]	[illegible]	[illegible]
EC060	36.00	43.00	21.00	2.25	33.75	7.00	4.00	15.75	10.13	15.75	1.50	17.75	3.25	1.50	20.00	18.00	1"FPT	18 × 20 × 1 (2)
EC070	[illegible]	[illegible]	[illegible]	[illegible]	[illegible]	[illegible]	[illegible]	[illegible]	[illegible]	[illegible]	[illegible]	[illegible]	[illegible]	[illegible]	[illegible]	[illegible]	[illegible]	[illegible]

NOTE: All dimensions within +– 0.125". All condensate drain connections are 3/4" FPT. EC015-070 can be field converted between end blow and straight through supply air configurations. Specifications subject to change without notice.

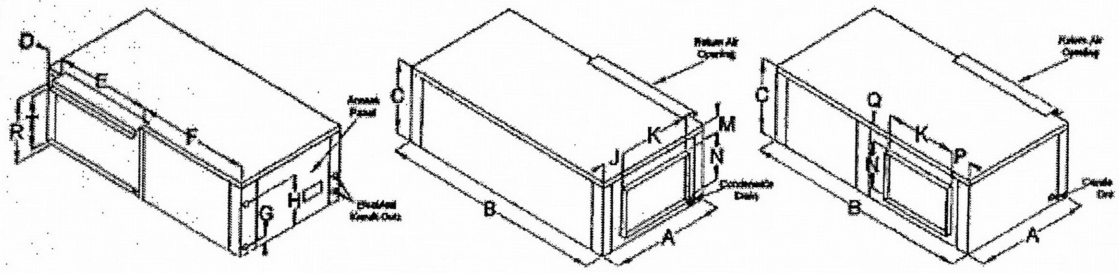

Left Hand Return End Blow (FLE)

NOTE: Models EC048 & 060 Left Hand Return units have condenser water connections on the front right and electrical knockouts on the front left.

Left Hand Return Straight Through (FLS)

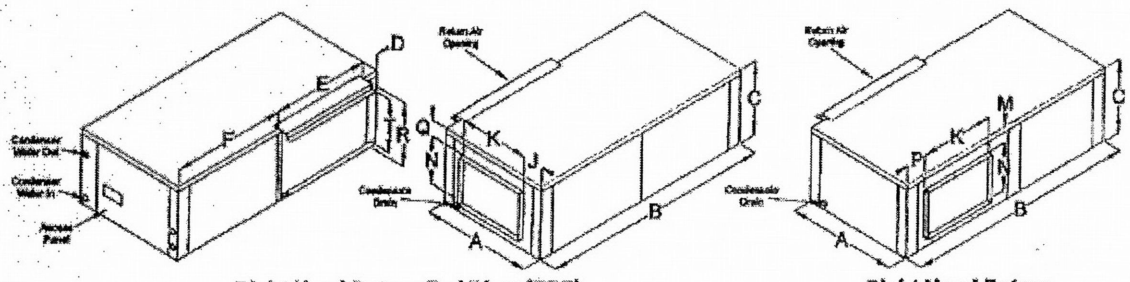

Right Hand Return End Blow (FRE)

Right Hand Return Straight Through (FRS)

Service Clearances

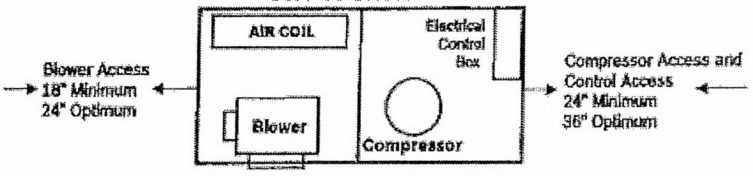

NOTE: The local electric codes may require 36" or more clearance at the electrical control box.

P1000® & P1001 CHANNELS

FOR 1⅝" (41 MM) WIDTH SERIES CHANNEL

P1000

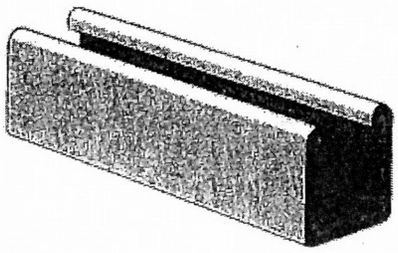

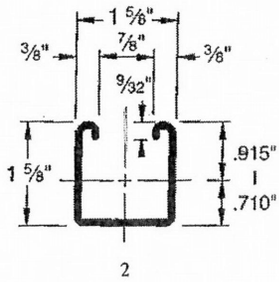

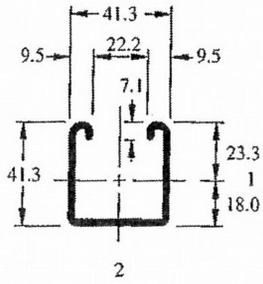

Pierced channels are found on pages 60 and 61.

Weight: 190 Lbs/C Ft (283 kg/100 m)

P1001

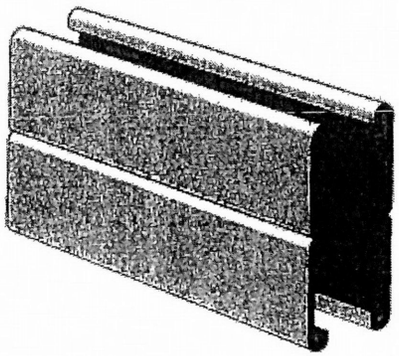

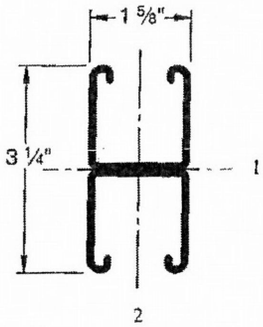

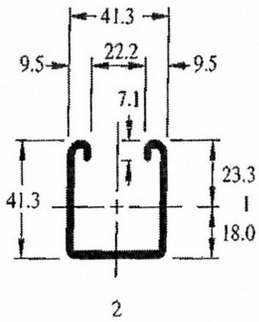

Weight: 380 Lbs/C Ft (566 kg/100 m)

BEAM LOAD*

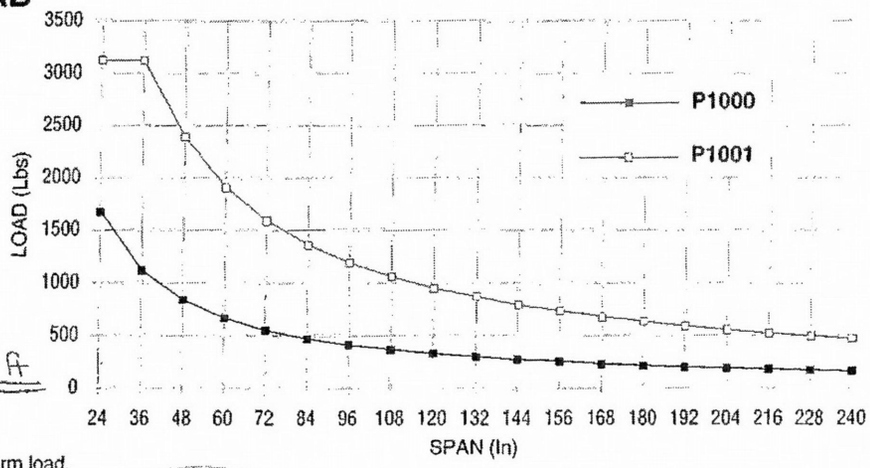

$\frac{5080}{12} = 423\#/ft$

*Maximum allowable uniform load.

Channel	Weight		Allowable Moment		Material Thickness		Standard Lengths		Finishes				Other Materials	
	Lbs/Ft	kg/m	In-Lb	N•m	In	mm	10'	20'	PL	GR	HG	PG	SS	EA
P1000	1.90	2.8	5,080	570	.105	2.7	■	■	■	■	■	■	■	■
P1001	3.80	5.7	14,390	1630	.105	2.7	■	■	■	■	■	■	■	■

Nominal thickness of 12 gage strip steel is .105 inches.

4

MAXIMUM ALLOWABLE PULL-OUT AND SLIP LOADS

Channel Nut Size/Thread	Gage	Channel	Allowable Pull-Out Strength		Resistance to Slip		Torque	
			Lbs	kN	Lbs	kN	Ft Lbs	N•m
¾" - 10	12	P1000 P3000 P5000 P5500	2500	11.1	1700	7.6	125*	170
⅝" - 11			2500	11.1	1500	6.7	100*	135
½" - 13			2000	8.9	1500	6.7	50	70
7/16" - 14			1400	6.2	1000	4.4	35	50
⅜" - 16			1000	4.4	800	3.6	19	25
5/16" - 18			800	3.6	500	2.2	11	15
¼" - 20			600	2.7	300	1.3	6	8
½" - 13	12	P3300	1500	6.7	1500	6.7	50	70
⅜" - 16			1000	4.4	800	3.6	19	25
5/16" - 18			800	3.6	500	2.2	11	15
¼" - 20			600	2.7	300	1.3	6	8
½" - 13	14	P1100 & P4100	1400	6.2	1000	4.4	50	70
⅜" - 16			1000	4.4	750	3.3	19	25
5/16" - 18			800	3.6	400	1.8	11	15
¼" - 20			600	2.7	300	1.3	6	8
½" - 13	16	P2000 & P4000	1000	4.4	1000	4.4	50	70
⅜" - 16			1000	4.4	750	3.3	19	25
5/16" - 18			800	3.6	400	1.8	11	15
¼" - 20			600	2.7	300	1.3	6	8

* May require ⅜" or ½" thick fitting.
Nut design loads include a minimum safety factor of 3.
Note: Refer to the Channel Nut Selection Chart on the following two pages for the part number.

Company:	BK Engineers Inc	Page:	1
Specifier:	Robert McClung	Project:	ADP Plaza Fitness Meci
Address:	2700 SE Harrison St Ste B	Sub-Project I Pos. No.:	
Phone I Fax:	503-607-0481 |	Date:	10/1/2013
E-Mail:	robert@bkengineers.com		

Specifier's comments:

1 Input data

Anchor type and diameter:	**KWIK HUS-EZ I (KH-EZ I) 1/4 (2 1/2)**
Effective embedment depth:	h_{ef} = 1.920 in., h_{nom} = 2.500 in.
Material:	Carbon Steel
Evaluation Service Report:	ESR-3027
Issued I Valid:	8/1/2012 | 12/1/2013
Proof:	design method ACI 318 / AC193
Stand-off installation:	- (Recommended plate thickness: not calculated)
Profile:	no profile
Base material:	cracked concrete, 2500, f_c' = 2500 psi; h = 7.000 in.
Reinforcement:	tension: condition B, shear: condition B; no supplemental splitting reinforcement present edge reinforcement: none or < No. 4 bar
Seismic loads (cat. C, D, E, or F)	yes (D.3.3.6)

Geometry [in.] & Loading [lb, in.lb]

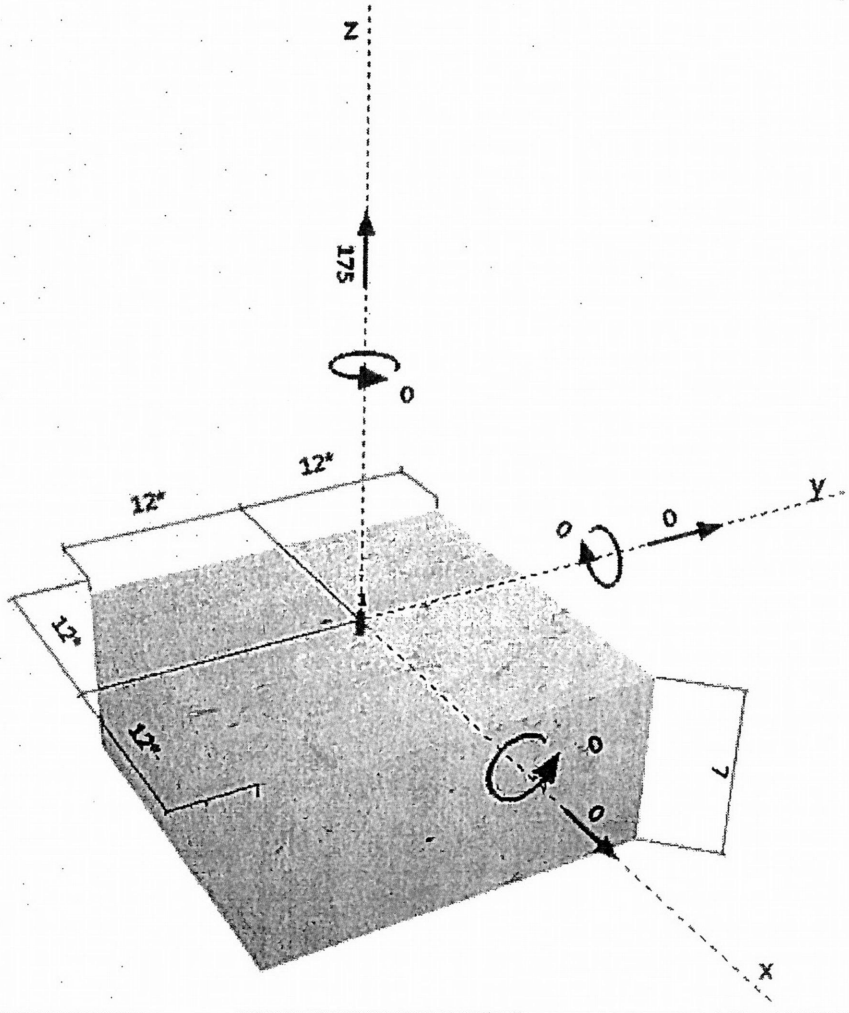

PROFIS Anchor (c) 2003-2009 Hilti AG, FL-9494 Schaan Hilti is a registered Trademark of Hilti AG, Schaan

Company:	BK Engineers Inc	Page:	2
Specifier:	Robert McClung	Project:	ADP Plaza Fitness Meci
Address:	2700 SE Harrison St Ste B	Sub-Project I Pos. No.:	
Phone I Fax:	503-607-0481 I	Date:	10/1/2013
E-Mail:	robert@bkengineers.com		

2 Proof I Utilization (Governing Cases)

		Design values [lb]		Utilization	
Loading	Proof	Load	Capacity	β_N / β_V [%]	Status
Tension	Pullout Strength	175	227	77 / -	OK
Shear	-	-	-	- / -	-

Loading	β_N	β_V	ζ	Utilization $\beta_{N,V}$ [%]	Status
Combined tension and shear loads	-	-	-	-	-

3 Warnings

- Please consider all details and hints/warnings given in the detailed report!

Fastening meets the design criteria!

4 Remarks; Your Cooperation Duties

- Any and all information and data contained in the Software concern solely the use of Hilti products and are based on the principles, formulas and security regulations in accordance with Hilti's technical directions and operating, mounting and assembly instructions, etc., that must be strictly complied with by the user. All figures contained therein are average figures, and therefore use-specific tests are to be conducted prior to using the relevant Hilti product. The results of the calculations carried out by means of the Software are based essentially on the data you put in. Therefore, you bear the sole responsibility for the absence of errors, the completeness and the relevance of the data to be put in by you. Moreover, you bear sole responsibility for having the results of the calculation checked and cleared by an expert, particularly with regard to compliance with applicable norms and permits, prior to using them for your specific facility. The Software serves only as an aid to interpret norms and permits without any guarantee as to the absence of errors, the correctness and the relevance of the results or suitability for a specific application.
- You must take all necessary and reasonable steps to prevent or limit damage caused by the Software. In particular, you must arrange for the regular backup of programs and data and, if applicable, carry out the updates of the Software offered by Hilti on a regular basis. If you do not use the AutoUpdate function of the Software, you must ensure that you are using the current and thus up-to-date version of the Software in each case by carrying out manual updates via the Hilti Website. Hilti will not be liable for consequences, such as the recovery of lost or damaged data or programs, arising from a culpable breach of duty by you.

Input data and results must be checked for agreement with the existing conditions and for plausibility!
PROFIS Anchor (c) 2003-2009 Hilti AG, FL-9494 Schaan. Hilti is a registered Trademark of Hilti AG, Schaan

Company:	BK Engineers Inc	Page:	1
Specifier:	Robert McClung	Project:	ADP Plaza Fitness Meci
Address:	2700 SE Harrison St Ste B	Sub-Project I Pos. No.:	
Phone I Fax:	503-607-0481 |	Date:	10/1/2013
E-Mail:	robert@bkengineers.com		

Specifier's comments:

1 Input data

Anchor type and diameter:	**Kwik Bolt TZ - CS 3/8 (2)**
Effective embedment depth:	h_{ef} = 2.000 in., h_{nom} = 2.313 in.
Material:	Carbon Steel
Evaluation Service Report:	ESR-1917
Issued I Valid:	5/1/2013 | 5/1/2015
Proof:	design method ACI 318 / AC193
Stand-off installation:	- (Recommended plate thickness: not calculated)
Profile:	no profile
Base material:	cracked concrete, 2500, f_c' = 2500 psi; h = 7.000 in.
Reinforcement:	tension: condition B, shear: condition B; no supplemental splitting reinforcement present edge reinforcement: none or < No. 4 bar
Seismic loads (cat. C, D, E, or F)	yes (D.3.3.6)

Geometry [in.] & Loading [lb, in.lb]

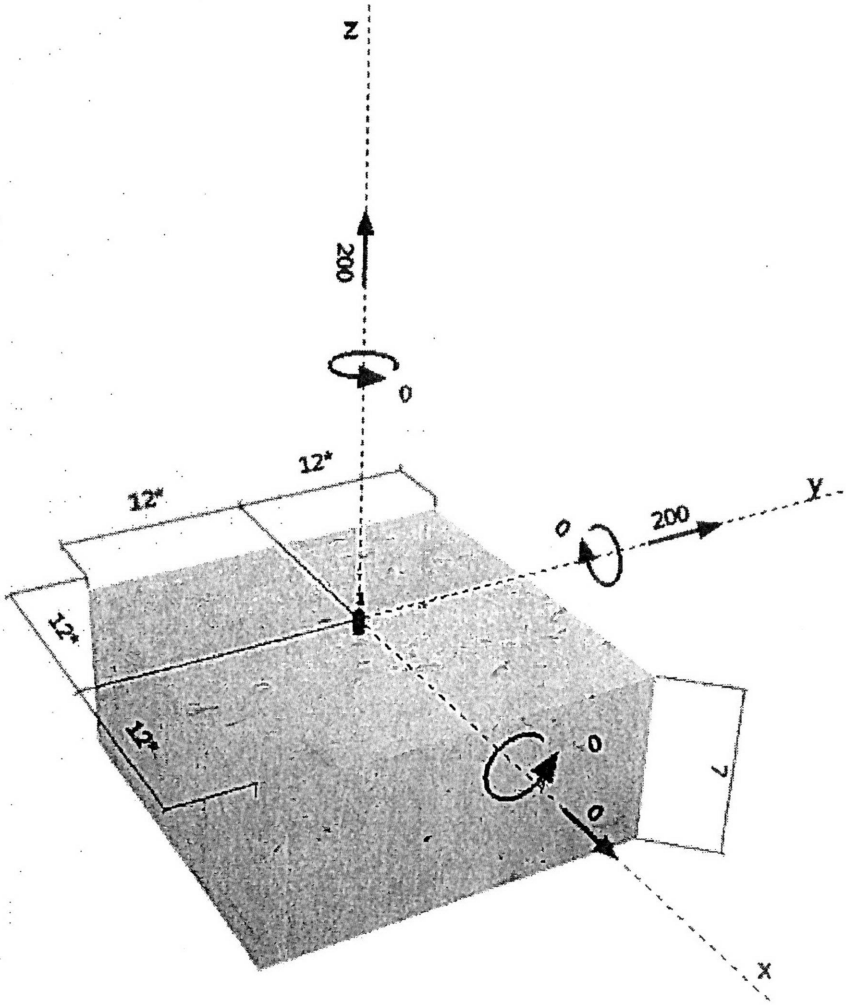

PROFIS Anchor (c) 2003-2009 Hilti AG, FL-9494 Schaan Hilti is a registered Trademark of Hilti AG, Schaan

Company:	BK Engineers Inc	Page:	2
Specifier:	Robert McClung	Project:	ADP Plaza Fitness Meci
Address:	2700 SE Harrison St Ste B	Sub-Project I Pos. No.:	
Phone I Fax:	503-607-0481 |	Date:	10/1/2013
E-Mail:	robert@bkengineers.com		

2 Proof I Utilization (Governing Cases)

		Design values [lb]		Utilization	
Loading	Proof	Load	Capacity	β_N / β_V [%]	Status
Tension	Pullout Strength	200	443	46 / -	OK
Shear	Pryout Strength	200	505	- / 40	OK

Loading	β_N	β_V	ζ	Utilization $\beta_{N,V}$ [%]	Status
Combined tension and shear loads	0.452	0.396	5/3	48	OK

3 Warnings

- Please consider all details and hints/warnings given in the detailed report!

Fastening meets the design criteria!

4 Remarks; Your Cooperation Duties

- Any and all information and data contained in the Software concern solely the use of Hilti products and are based on the principles, formulas and security regulations in accordance with Hilti's technical directions and operating, mounting and assembly instructions, etc., that must be strictly complied with by the user. All figures contained therein are average figures, and therefore use-specific tests are to be conducted prior to using the relevant Hilti product. The results of the calculations carried out by means of the Software are based essentially on the data you put in. Therefore, you bear the sole responsibility for the absence of errors, the completeness and the relevance of the data to be put in by you. Moreover, you bear sole responsibility for having the results of the calculation checked and cleared by an expert, particularly with regard to compliance with applicable norms and permits, prior to using them for your specific facility. The Software serves only as an aid to interpret norms and permits without any guarantee as to the absence of errors, the correctness and the relevance of the results or suitability for a specific application.
- You must take all necessary and reasonable steps to prevent or limit damage caused by the Software. In particular, you must arrange for the regular backup of programs and data and, if applicable, carry out the updates of the Software offered by Hilti on a regular basis. If you do not use the AutoUpdate function of the Software, you must ensure that you are using the current and thus up-to-date version of the Software in each case by carrying out manual updates via the Hilti Website. Hilti will not be liable for consequences, such as the recovery of lost or damaged data or programs, arising from a culpable breach of duty by you.

Input data and results must be checked for agreement with the existing conditions and for plausibility!
PROFIS Anchor (c) 2003-2009 Hilti AG, FL-9494 Schaan Hilti is a registered Trademark of Hilti AG, Schaan

COOK

MARK: EF-1
PROJECT: HUNTER-DAVISSON BILL
DATE: 9/5/2013

GEMINI

Inline Blowers
200-700 Series

STANDARD CONSTRUCTION FEATURES:
Forward curved galvanized steel fan wheels - Corrosion resistant galvanized steel fan housing - Acoustically insulated housing - Aluminum backdraft damper with solid aluminum hinge rod mounted in brass bushings - Permanently lubricated motor with built-in thermal overload protection and disconnect plug - Interchangeable panels with removable fasteners allows the discharge to be easily changed - Internal wiring box with disconnect receptacle.

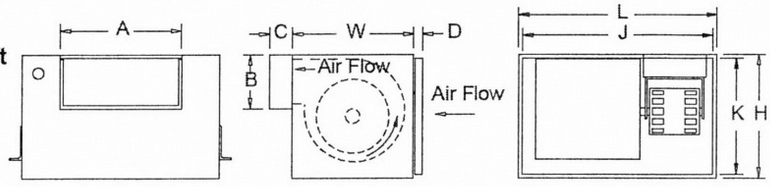

Performance

Qty	Catalog Number	Flow (CFM)	SP (inwc)	Nominal RPM	Input Watts
1	GN-740	815	.125	1567	373

Altitude (ft): 39 Temperature (F): 70

Motor Information

Volts/Ph/Hz	Nameplate Amps
115/1/60	3.9

Sound Data Inlet Sound Power by Octave Band

1	2	3	4	5	6	7	8	LwA	dBA	Sones	HVISones
69	66	66	58	42	31	42	44	60	46	4.9	4.0

Accessories:
FAN SPEED CONTROLLER 5 AMP 120 VOLT

Dimensions (inches)

L-HSG	17
W-HSG	11-7/8
H-HSG	11-7/8
A-Outlet	10-1/2
B-Outlet	4-3/4
J-Inlet	16-15/16
K-Inlet	11-15/16
C	1
D	5/8

NOTE: Accessories may affect dimensions shown.

Shipping Weight(lbs)***	37

***Includes fan, motor & accessories.

Fan Curve

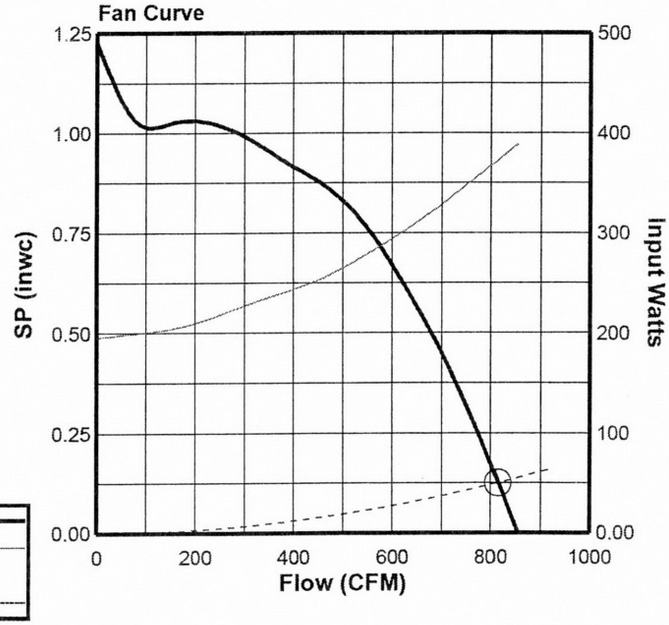

Fan Curve Legend

CFM vs SP	———
CFM vs Watts	———
Point of Operation	○
System Curve	- - - -

COOK

PROJECT: HUNTER-DAVISSON BILL
DATE: 9/5/2013

FSC

Fan Speed Controls

STANDARD CONSTRUCTION FEATURES:

PRODUCT DESCRIPTION - Through the "Quadrac" integrated semi-conductor device it is now possible to offer this system with many advantages. Fewer semi-conductor parts mean greater reliability and the passivation process used in the manufacture of the semi-conductor insures long life. Printed circuit construction eliminates wiring difficulties and guarantees workmanship. All of these factors serve to offer the most important of all features - quality. SPEED CONTROL - Positive Off/On action in the control dial. Speed range set to the customer's requirements. CONTROL RATING - 120 volts, 60 cycles, 1 phase. Maximum ambient temperature - 120 degree F (5 AMP, 10 AMP, 15 AMP). 220/240 volt, 50/60 cycles, 1 phase. Maximum ambient temperature - 120 degree F (5 AMP, 10 AMP). 220/240 volt model not UL listed. Fan cannot have UL listing if furnished with prewired 220/240 volt FSC. 277 volt, 60 cycles, 1 phase. Maximum ambient temperature - 120 degree F (5 AMP). WARNING - Power must be turned off before installing this unit. STANDARD INSTALLATION - Fits any standard single gang box. Turn off power and connect the two wires on the control to the two switch wires in the usual manner. The connection box is not supplied. SPECIAL FEATURES - Complete range control, solid state "Quadrac" integrated circuitry, solid state construction for long reliable operating life, saves on electric bills.

Dimensions (inches)

Mark	Qty	Description
EF-1	1	FSC 5 AMP 120 VOLT

FS-5

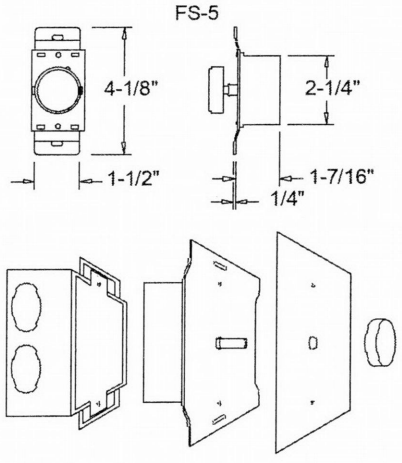

FS-10

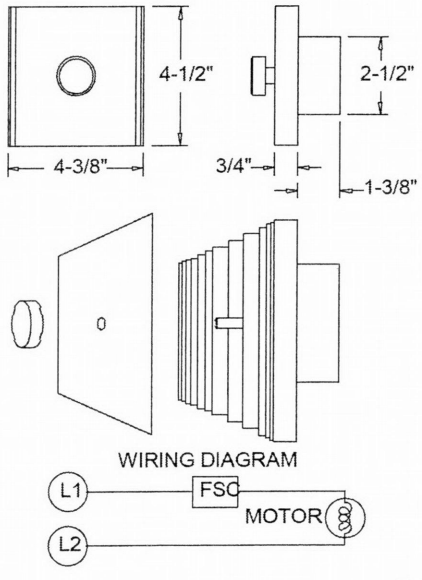

WIRING DIAGRAM

ELECTRICAL DATA

Series EC Water Source Heat Pump

Model	Electrical Symbol	Voltage/Hz/ Phase	Compressor			Blower Motor			Min. Circuit Amps	Max Fuse/ HARC
			Quantity	RLA	LRA	Quantity	FLA	HP		
EC007	0	115/60/1	1	5.0	36.2	1	2.2	0.1	8.5	15
	1	208-230/60/1	1	2.5	17.7	1	0.96	0.1	4.0	15
EC009	0	115/60/1	1	7.0	45.6	1	2.2	0.1	11.0	15
	1	208-230/60/1	1	3.4	22.2	1	0.96	0.1	5.2	15
	2	265/60/1	1	2.9	18.8	1	0.85	0.1	4.4	15
EC012	0	115/60/1	1	9.6	58.4	1	2.2	0.1	14.2	20
	1	208-230/60/1	1	4.6	27.9	1	0.96	0.1	6.7	15
	2	265/60/1	1	3.8	22.2	1	0.85	0.1	5.6	15
EC015	1	208-230/60/1	1	5.6	29.0	1	0.96	0.1	7.9	15
	2	265/60/1	1	4.6	20.0	1	0.85	0.1	6.6	15
EC018	1	208-230/60/1	1	6.5	43.0	1	1.8	0.25	9.9	15
	2	265/60/1	1	5.8	46.0	1	1.6	0.25	8.9	15
EC024	1	208-230/60/1	1	7.4	43.0	1	1.8	0.25	11.1	15
	2	265/60/1	1	6.7	46.0	1	1.6	0.25	10.0	15
	3	208-230/60/3	1	5.9	63.0	1	1.8	0.25	9.2	15
	4	460/60/3	1	2.9	30.0	1	0.9	0.25	4.5	15
EC030	1	208-230/60/1	1	9.9	54.0	1	1.8	0.25	14.2	20
	2	265/60/1	1	8.5	46.0	1	1.6	0.25	12.2	20
	3	208-230/60/3	1	6.9	63.0	1	1.8	0.25	10.4	15
	4	460/60/3	1	3.6	30.0	1	0.9	0.25	5.4	15
EC036	1	208-230/60/1	1	13.0	74.0	1	4.4	0.50	20.7	30
	2	265/60/1	1	11.3	67.0	1	3.3	0.50	17.4	25
	3	208-230/60/3	1	7.8	68.0	1	4.4	0.50	14.2	20
	4	460/60/3	1	3.9	34.0	1	1.8	0.50	6.7	15
EC041	1	208-230/60/1	1	13.6	88.0	1	4.4	0.50	21.4	35
	2	265/60/1	1	12.0	67.0	1	3.3	0.50	18.3	30
	3	208-230/60/3	1	8.8	68.0	1	4.4	0.50	15.4	20
	4	460/60/3	1	4.4	34.0	1	1.8	0.50	7.3	15
EC042	1	208-230/60/1	1	13.6	88.0	1	4.4	0.50	21.4	35
	2	265/60/1	1	12.0	67.0	1	3.3	0.50	18.3	30
	3	208-230/60/3	1	8.8	68.0	1	4.4	0.50	15.4	20
	4	460/60/3	1	4.4	34.0	1	1.8	0.50	7.3	15
EC048	1	208-230/60/1	1	15.7	84.0	1	4.4	0.75	24.0	35
	3	208-230/60/3	1	11.0	88.0	1	4.4	0.75	18.2	25
	4	460/60/3	1	5.4	44.0	1	2.8	0.75	9.6	15
	5	575/60/3	1	4.0	36.0	1	2.6	0.75	8.1	15
EC060	1	208-230/60/1	1	26.3	134.0	1	4.4	0.75	37.2	60
	3	208-230/60/3	1	15.6	110.0	1	4.4	0.75	23.0	35
	4	460/60/3	1	7.8	52.0	1	2.8	0.75	12.5	20
	5	575/60/3	1	5.8	38.9	1	2.6	0.75	9.8	15
EC070	1	208-230/30/1	1	30.1	158.0	1	4.4	0.75	42.0	70
	3	208-230/60/3	1	20.5	155.0	1	4.4	0.75	30.0	50
	4	460/60/3	1	9.6	75.0	1	2.8	0.75	14.8	20
	5	575/60/3	1	7.6	54.0	1	2.6	0.75	12.1	15

NOTES:
208/230V units shipped with transformer wired for 230V—for 208V remove orange tranformer primary lead and replace with red lead. All blower motors are single phase.
UNIT POWER SUPPLY: A voltage variation of +/- 10% of nameplate rating is acceptable. Phase imbalance shall not exceed 2%.

BLOWER PERFORMANCE CFM

Series EC Water Source Heat Pump

Model	Available External Static Pressure (in. wc. Wet coil and filter included)												
	Motor Speed	0.10	0.20	0.30	0.40	0.50	0.60	0.70	0.80	0.90	1.00	1.10	1.20
EC007	High	410	380	350	315	280	210	-	-	-	-	-	-
	Medium	390	360	330	300	260	-	-	-	-	-	-	-
	Low	370	340	295	250	-	-	-	-	-	-	-	-
EC009	High	410	380	350	315	280	210	-	-	-	-	-	-
	Medium	390	360	330	300	260	-	-	-	-	-	-	-
	Low	370	340	295	250	-	-	-	-	-	-	-	-
EC012	High	425	410	390	370	350	325	300	-	-	-	-	-
	Medium	410	395	375	355	330	305	-	-	-	-	-	-
	Low	385	370	350	330	305	-	-	-	-	-	-	-
EC015	High	520	500	480	460	430	400	340	-	-	-	-	-
	Medium	380	370	360	340	330	-	-	-	-	-	-	-
	Low	320	300	280	-	-	-	-	-	-	-	-	-
EC018	High	770	700	680	650	610	570	530	515	-	-	-	-
	Medium	670	650	615	570	530	515	-	-	-	-	-	-
	Low	560	520	510	-	-	-	-	-	-	-	-	-
EC024	High	900	850	800	760	710	690	680	670	-	-	-	-
	Medium	750	720	690	670	-	-	-	-	-	-	-	-
	Low	670	-	-	-	-	-	-	-	-	-	-	-
EC030	High	1250	1170	1120	1070	940	830	740	650	-	-	-	-
	Medium	1050	980	920	830	760	700	-	-	-	-	-	-
	Low	975	910	870	740	640	-	-	-	-	-	-	-
EC036	High	1500	1440	1370	1290	1210	1120	1000	900	-	-	-	-
	Medium	1410	1350	1290	1220	1150	1060	900	-	-	-	-	-
	Low	1290	1250	1200	1150	1080	1000	-	-	-	-	-	-
EC041	High	1260	1180	1100	1030	960	870	810	720	-	-	-	-
	Medium	1210	1150	1070	1010	940	850	750	-	-	-	-	-
	Low	1000	960	920	860	800	740	-	-	-	-	-	-
EC042	High	1560	1500	1420	1340	1260	1170	1070	950	-	-	-	-
	Medium	1470	1410	1340	1270	1200	1110	1010	-	-	-	-	-
	Low	1340	1300	1250	1200	1130	1050	-	-	-	-	-	-
EC048	High	1880	1830	1780	1710	1630	1550	1460	1350	1300	-	-	-
	Medium	1620	1600	1580	1530	1490	1420	1350	-	-	-	-	-
	Low	1390	1360	1330	1310	1290	1250	-	-	-	-	-	-
EC060	High	2160	2090	2030	1960	1870	1800	1730	1680	1640	1600	1550	1500
	Medium	1910	1840	1790	1710	1620	1560	1490	1430	-	-	-	-
	Low	1600	1580	1550	1510	1460	-	-	-	-	-	-	-
EC070	High	2240	2220	2200	2150	2050	2000	1940	1870	1870	1800	1700	1590
	Medium	1900	1890	1880	1870	1860	1825	1790	1730	1670	1590	1500	-
	Low	1570	1560	1550	1540	1530	1505	1475	1440	1400	-	-	-

PHYSICAL DATA

Series EC Water Source Heat Pump

Unit Size	EC007	EC009	EC012	EC015	EC018	EC024	EC030
Compressor Type	Rotary	Rotary	Rotary	Rotary	Reciprocating	Reciprocating	Reciprocating
Quantity	1	1	1	1	1	1	1
Refrigerant Charge oz.	21	21	22	27	35	50	48
Coil Face Area Ft²	0.90	0.90	0.97	1.42	1.88	2.12	2.29
Rows	3	3	3	3	3	3	3
Filter Size HZ (Qty) in. (Nominal)	10 x 16 x 1 (1)	10 x 16 x 1 (1)	10 x 16 x 1 (1)	16 x 20 x 1 (1)	16 x 20 x 1 (1)	18 x 20 x 1 (1)	18 x 20 x 1 (1)
Filter Size VT (Qty) in. (Nominal)	10 x 16 x 1 (1)	10 x 16 x 1 (1)	10 x 16 x 1 (1)	16 x 20 x 1 (1)	16 x 20 x 1 (1)	18 x 20 x 1 (1)	20 x 20 x 1 (1)
Blower Size in.	4 x 6	4 x 6	4 x 7	4 x 7	9 x 7	9 x 7	9 x 7
Motor HP	1/10	1/10	1/10	1/10	1/4	1/4	1/4
Quantity	1	1	1	1	1	1	1
Type	PSC	PSC	PSC	PSC	PSC	PSC	PSC
Water Connections in. FPT	3/4	3/4	3/4	3/4	3/4	3/4	3/4
Rated Water Flow Rate (GPM)	2	2.5	3	4	5	6	7
Water Pressure Drop @ Rated Flow (PSI/FOH) water loop cooling	2.4/5.6	3.2/7.0	4.5/10.4	5.6/13.0	8.4/19.4	5.1/11.8	5.6/12.9
Condensate Connection in. FPT	3/4	3/4	3/4	3/4	3/4	3/4	3/4
Unit Ship Weight Lbs. (V/H)	127 / 140	129 / 142	140 / 154	170 / 187	195 / 215	228 / 251	245 / 270
Unit Operating Weight Lbs (V/H)	118 / 130	120 / 132	129 / 142	158 / 174	180 / 198	205 / 226	230 / 253

Unit Size	EC036	EC041	EC042	EC048	EC060	EC070
Compressor Type	Reciprocating	Reciprocating	Reciprocating	Scroll	Scroll	Scroll
Quantity	1	1	1	1	1	1
Refrigerant Charge oz.	62	70	66	74	99	115
Coil Face Area Ft²	3.50	2.29	3.50	4.50	4.50	6.00
Rows	3	4	3	3	3	3
Filter Size HZ (Qty) in. (Nominal)	18 x 30 x 1 (1)	20 x 20 x 1 (1)	18 x 30 x 1 (1)	18 x 20 x 1 (2)	18 x 20 x 1 (2)	20 x 24 x 1 (2)
Filter Size VT (Qty) in. (Nominal)	24 x 24 x 1 (1)	20 x 20 x 1 (1)	24 x 24 x 1 (1)	24 x 30 x 1 (1)	24 x 30 x 1 (1)	16 x 30 x 1 x (2)
Blower Size ins.	9 x 7	9 x 7	9 x 7	10 x 8	11 x 9	11 x 9
Motor HP	1/2	1/2	1/2	3/4	3/4	3/4
Quantity	1	1	1	1	1	1
Type	PSC	PSC	PSC	PSC	PSC	PSC
Water Connections in. FPT	3/4	3/4	3/4	1	1	1
Rated Water Flow Rate (GPM)	9	9	10	12	15	16
Water Pressure Drop @ Rated Flow (PSI/FOH) water loop cooling	3.7/8.6	3.8/8.7	4.5/10.5	4.2/9.8	4.4/10.2	9.1/21.1
Condensate Connection in. FPT	3/4	3/4	3/4	3/4	3/4	3/4
Unit Ship Weight Lbs. (V/H)	288 / 317	265 / 292	276 / 304	328 / 361	360 / 396	410 / 451
Unit Operating Weight Lbs (V/H)	268 / 295	250 / 275	256 / 282	304 / 334	339 / 373	385 / 424

HORIZONTAL UNIT DIMENSIONS

Horizontal Water Source Heat Pump

Overall unit dimensions do not include filter rack or duct flanges.

Model	A Width	B Depth	C Height	D	E R/A Duct Width	F	G	H	J	K	M	N	P	Q	R Filter Rack Height	T R/A Duct Flange Height	Condenser Water Connections	Recommended Replacement Nominal Filter Size
EC007	19.00	31.00	13.25	2.00	15.00	14.00	2.38	7.38	2.25	11.75	2.00	7.75	2.25	1.88	10.00	8.00	3/4"FPT	10 × 16 × 1
EC009	19.00	31.00	13.25	2.00	15.00	14.00	2.38	7.38	2.25	11.75	2.00	7.75	2.25	1.88	10.00	8.00	3/4"FPT	10 × 16 × 1
EC012	19.00	31.00	13.25	2.00	15.00	14.00	2.38	7.38	2.50	11.75	2.00	7.75	2.25	3.00	10.00	8.00	3/4"FPT	10 × 16 × 1
EC015	21.50	43.00	17.00	2.00	17.50	23.50	2.38	13.25	4.00	11.75	2.00	9.75	2.25	2.50	16.00	14.00	3/4"FPT	16 × 20 × 1
EC018	21.50	43.00	17.00	2.00	17.50	23.50	2.38	13.25	3.50	11.75	2.00	13.75	3.50	1.75	16.00	14.00	3/4"FPT	16 × 20 × 1
EC024	21.50	43.00	19.00	2.00	17.50	23.50	2.38	12.50	3.25	11.75	3.25	13.75	3.25	1.75	18.00	16.00	3/4"FPT	18 × 20 × 1
EC030	22.00	45.00	19.00	2.00	19.50	23.50	2.38	12.50	2.50	13.75	1.50	15.75	2.50	1.50	18.00	16.00	3/4"FPT	18 × 20 × 1
EC036	22.00	54.50	19.00	2.00	29.00	23.50	2.38	14.75	2.50	13.75	1.50	15.75	2.50	1.50	18.00	16.00	3/4"FPT	18 × 30 × 1
EC041	21.50	43.00	22.00	2.00	17.50	23.50	2.38	14.75	2.50	13.75	3.00	15.75	2.50	3.50	20.00	18.00	3/4"FPT	20 × 20 × 1
EC042	22.00	54.50	19.00	2.00	29.00	23.50	2.38	14.75	2.50	13.75	1.50	15.75	2.50	1.50	18.00	16.00	3/4"FPT	18 × 30 × 1
EC048	36.00	43.00	21.00	2.25	33.75	7.00	2.63	14.75	10.13	15.75	2.50	15.75	2.00	2.50	20.00	18.00	1"FPT	18 × 20 × 1 (2)
EC060	36.00	43.00	21.00	2.25	33.75	7.00	4.00	15.75	10.13	15.75	1.50	17.75	3.25	1.50	20.00	18.00	1"FPT	18 × 20 × 1 (2)
EC070	36.00	78.00	21.50	2.50	44.00	21.50	2.13	17.00	2.75	17.75	2.75	17.75	2.75	1.25	20.50	18.50	1"FPT	20 × 24 × 1 (2)

NOTE: All dimensions within +– 0.125". All condensate drain connections are 3/4" FPT. EC015-070 can be field converted between end blow and straight through supply air configurations. Specifications subject to change without notice.

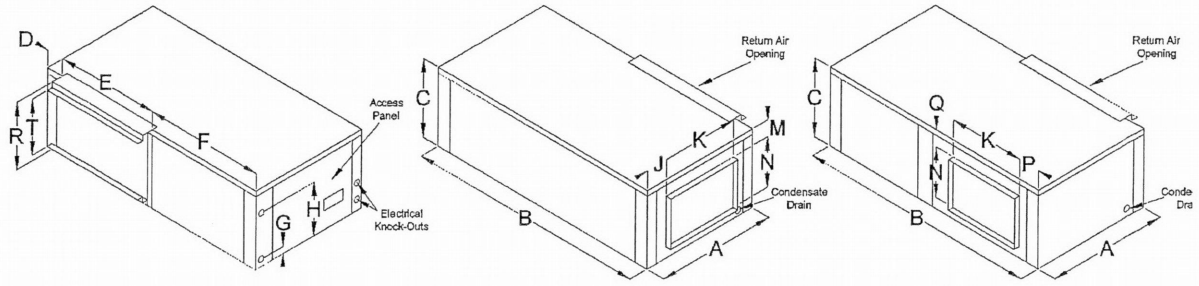

Left Hand Return End Blow (FLE)

Left Hand Return Straight Through (FLS)

NOTE: Models EC048 & 060 Left Hand Return units have condenser water connections on the front right and electrical knockouts on the front left.

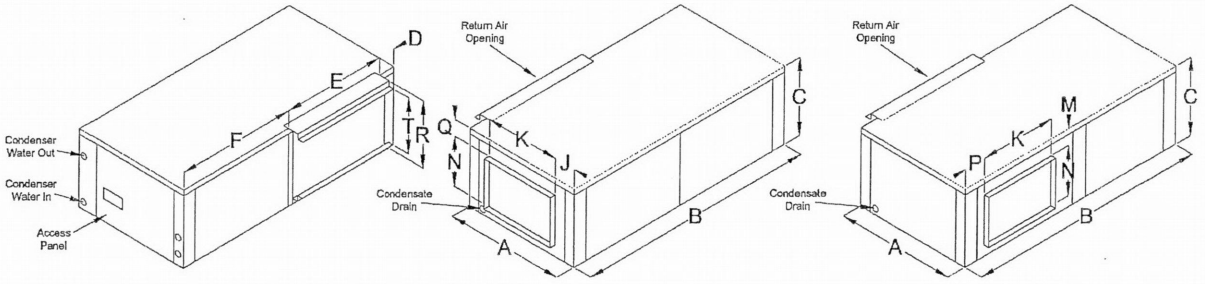

Right Hand Return End Blow (FRE)

Right Hand Return Straight Through (FRS)

Service Clearances

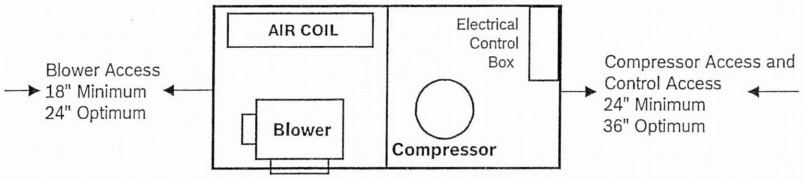

NOTE: The local electric codes may require 36" or more clearance at the electrical control box.

FPP Structural Checksheet Response

Permit #: 13-202141-000-00-FA **Date:** 10-8-13

Customer name and phone number: Bill Hewes 503-542-3609

Note: *Please number each change in the '#' column. Use as many lines as necessary to describe your changes. Indicate which reviewer's checksheet you are responding to and the item your change addresses. If the item is not in response to a checksheet, write* **customer** *in the last column*

#	Description of changes, revisions, additions, etc.	Checksheet and item #
3 copys	Revised Seismic Bracing	1#

(for office use only)

RECEIVED

OCT 09 2013

FACILITIES PERMITS

Facilities Checksheet Response

Permit #: **13-202141-000-00-FA** **Date:** 10-2-2013

Customer name and phone number: Bill Hewes

Note: *Please number each change in the '#' column. Use as many lines as necessary to describe your changes. Indicate which reviewer's checksheet you are responding to and the item your change addresses. If the item is not in response to a checksheet, write* **customer** *in the last column.*

#	Description of changes, revisions, additions, etc.	Checksheet and item #
3 SETS	ENGINEERING CALCS FOR NEW SUSPENDED WSHP	1#

(For office use only)

5

2

CITY OF PORTLAND, OREGON - BUREAU OF DEVELOPMENT SERVICES

1900 SW Fourth Avenue, Suite 5000 • Portland, Oregon 97201 • www.portlandonline.com/bds • Fax 503-823-7425

Facility Permit Plan Intake Form

FOR INTAKE, STAFF USE ONLY

Date Received _____

Building Registration # _____

Fixed Bid _____

Bin # B1

Building Permit # _____

Mechanical # 13-202141-FA

Plumbing Permit # _____

Electrical Permit # _____

Building/Mechanical Joe

Electrical John

Plumbing _____

Fire Jeff

Planning _____

BES _____

PDOT _____

Structural Eric

Other _____

1/3/2

APPLICANT: Complete all sections below that apply to the project. Please print legibly.

Print Name William A. Hewes Sign Name William A Hewes

Street Address 1800 SE Pershing St

City Portland State OR Zip Code 97202

Day Phone (503) 542-3609 FAX (503) 542-3654 email bhewes@hunterdavisson.com

Plans / permits available for pick up at 1900 SW 4th Avenue, 2nd floor between 8:00 am to 5:00 pm

Contact Name for plan/permit pick up William A. Hewes

Day Phone (503) 542-3609 email bhewes@hunterdavisson.com

Project Building Name / # ADP Plaza

Project Address or Location 2525 S.W. 1st. Ave. Port. Ore. 97201

Project Name and Description _____

Total Project Value _____ Project Reference #/Billing ID # 2013-192467-000-00-FA

Building Contractor _____ CCB # _____

MechanicalContractor Hunter-Davisson, Inc CCB # 1612

Electrical Contractor _____ CCB# _____ License # _____

Plumbing Contractor _____ CCB# _____ License # _____

13-202141-FA

☐ **Building Permit**

No. of Stories _____

Const. Type _____

[Y] [N] Alarms Required

[Y] [N] Smoke Det. Req'd

[Y] [N] Sprinklers Req'd

[Y] [N] Struct. Eng / Calcs Submitted

☑ **Electrical Permit**

Please provide a completed standard electrical permit application form. You may mail or deliver it to 1900 SW 4th Avenue, Portland, Oregon 97201 or FAX to 503-823-7425.

☑ **Mechanical Permit**

Mechanical Valuation $26,142.00

Description Replace 5 ton WSHP ,associated duct work

Replace Ex. fan & duct , duct mod's , GRD's ,air balance

☐ **Plumbing Permit**

Number of Fixtures _____

Back Flow Devices _____

Water Service (# of Feet) _____

Medical Gas _____

Other _____

City of Portland
REVIEWED FOR CODE COMPLIANCE
OCT 16 2013
13-202141-FA
Permit Number

B1