Degenkolb

VOL I [redacted]

CITY OF PORTLAND FIRE STATION #1 SEISMIC UPGRADE AND FACILITY REMODEL

Calculations 1 of 2

March 6, 2008
Degenkolb Job Number A7293007 00

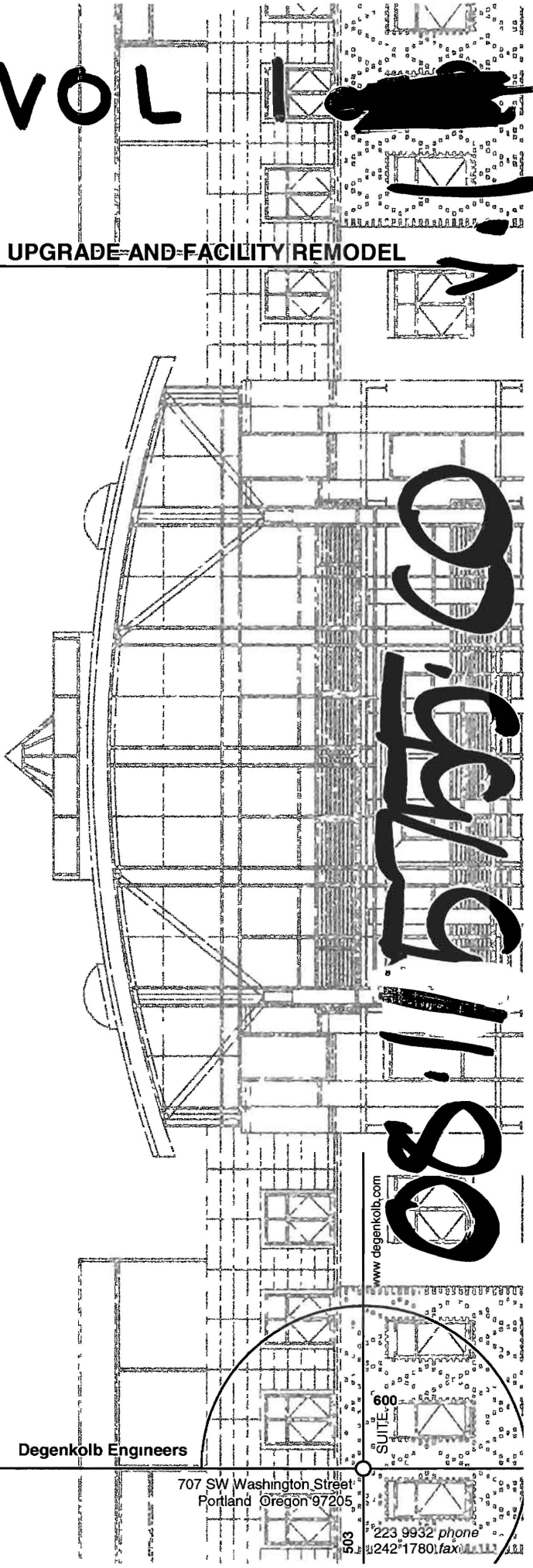

Degenkolb Engineers
707 SW Washington Street
Suite 600
Portland Oregon 97205
503 223 9932 *phone*
242 1780 *fax*
www degenkolb.com

Degenkolb Engineers

707 SW Washington Street
Suite 600
Portland, OR 97205
Phone 503 223 9932
Fax 503 242 1780

Transmittal

Date March 6, 2008

Job City of Portland, Fire Station #1
Seismic Upgrade and Facility Remodel

Job Number A7293007 00

Transmittal to PSE Architects, Inc
4412 SW Corbett Avenue
Portland, OR 97239

Attention Teresa Kruse/ Hans Ettlin

Copies	Date	Description
2	3/6/08	Structural Calculations for CD Set

- ☒ Attached
- ☐ Under separate cover
- ☒ Via Courier

- ☒ For your use
- ☐ As requested
- ☐ For review and comment
- ☐ Shop drawings returned
- ☐ Other For your signature

Remarks:

Signed Kent Yu, Devon Lumbard

Copies to

p \project a07\437\a7437007 00\corr\out\080306 pse trans doc

Degenkolb

San Francisco
Los Angeles
Portland
Oakland
San Diego
Seattle

March 6, 2008

Mr Hans Ettlin, AIA
PSE Architects, Inc
4412 SW Corbett Avenue
Portland, OR 97239

Reference **City of Portland, Fire Station 1**
Seismic Upgrade and Facility Remodel
Portland, Oregon
[Degenkolb Job Number A7437007.00]

Dear Teresa

Attached are calculation Sections A through E dated March 6, 2008, that verify the structural adequacy of the seismic upgrades and modifications to Fire Station 1, as shown on drawings S0 1 through S6 6, dated March 4, 2008 Upgrades and modifications to the existing structure have been designed and detailed in accordance with the requirements of the 2003 International Building Code, as amended by the State of Oregon, as well as ASCE 41 Seismic Rehabilitation of Existing Structures

If you have any questions or need further information, please call me

Very truly yours,

DEGENKOLB ENGINEERS

Devon Lumbard
Designer

Kent Yu
Associate Principal

KY/SJB/kjt
Attachments
P \project A0C\293\A6293004 00\Calcs\060727 ZGF Calc ltr doc

REGISTERED PROFESSIONAL ENGINEER
78778PE
OREGON
Nov 14, 2006
QI-SONG YU
EXPIRES 6/30/08

www degenkolb com

Degenkolb Engineers
707 SW Washington Street
Portland Oregon 97205
503 223 9932 *phone*
242 1780 *fax*
SUITE 600

Degenkolb

Degenkolb Engineers
707 SW Washington Street
Portland OR 97205
Phone 503 223 9932
Fax 503 242 1780

Subject	Calculations	**Job Number**	A7437007 00	**Date**	3/6/08
Job	Fire Station 1	**By**	DAL	**Section**	

STRUCTURAL CALCULATIONS

TABLE OF CONTENTS

Seismic Evaluation	2-103
Seismic Retrofit	104-188
2nd Floor Infill Framing	189-213
Roof Framing	214-308
Miscellaneous Calculations	309-371

Section A: Seismic Evaluation

Degenkolb

Subject. Modeling Notes	Job Number A7437007	Date	
Job FS1	By DAL	Section	
	Checked By	Page	of

- Model Concrete shearwalls w/ shell elements down to basement level
- Exclude gravity framing from Model (incoded Mass)
- Model Floors w/ rigid diaphragm constraints w/ mass @ CM
- Model Discontinuous shearwall and (E) Conc Column below

Degenkolb

Subject Mass Takeoff		Job Number A7437007	Date 4/26/07
Job Fire Station 1		By DAL	Section
		Checked By	Page of

2nd Flr

Slab = (0.15)(4/12) = 0.05 ksf

Bms = $\frac{(0.15)(12/12)(16/12)}{10'}$ = 0.02 ksf

Girders = $\frac{(0.15)(16/12)(24/12)}{18'}$ = 0.0222 ksf

Cols = $(0.15)\frac{(16)(16)}{144}\frac{(8+575)}{(10)(18)}$ = 0.0204 ksf

Partition = 0.01 ksf

Misc = 0.005 ksf

3rd Flr

Pan Joist = $(0.15)\frac{[(5.5''/12)(8''/12) + (1.66')(2.5''/12)]}{2.125'}$ = 0.0460 ksf @ 8" tyle

= 0.0514 ksf @ 10' tyle

Beams = $(0.15)\frac{(16)(24)}{144}\frac{1}{20'}$ = 0.020 ksf

Cols = $(0.15)\frac{(16)(16)}{144}\frac{(575+675)}{(10)(18)}$ = 0.0185 ksf low Columns

= 0.0207 ksf high columns

Partitions = 10 psf

Misc = 0.005 ksf

Roof

panjoist = $(0.15)\frac{[(5.5/12)(8''/12) + 1.66(2/12)]}{2.125}$ = 0.0411 ksf @ 8" tyle

= $\frac{(0.15)[(5.5/12)(10/12) + 1.66(2/12)]}{2.125}$ = 0.0465 ksf @ 10" tyle

Beams = $(0.15)\frac{(14)(24)}{144}\frac{1}{20'}$ = 0.0175 ksf

Stl joists ⇒ Assume 0.005 ksf + (2/12)(0.15) = 0.030 ksf

Misc = 0.01 ksf

Degenkolb

Subject Mass Takeoff		Job Number A7437007	Date 4/27/06
Job Fire Station 1		By DAL	Section
		Checked By	Page of

Misc Slabs

4" Slab = (0.15)(4/12) = 0.050 ksf
5" Slab = (0.15)(5/12) = 0.0625 ksf
6" Slab = (0.15)(6/12) = 0.075 ksf

9" Wall + Masonry

(9/12)(0.15) + 0.038 = 0.151

8" Interior Walls

(8/12)(0.15) = 0.1 ksf

Degenkolb

Subject Mass take off		Job Number A7437007	Date 4/27/06
Job Fire Station 1		By DAL	Section
		Checked By	Page of

Stairwell Stairs and landing.

Per Flr $(0.15)(7')(9')(4/12) + (0.15)(5')(9')(4/12) + (0.15)(7/12)(9')(14 \times (10+8))$
$+ 2(0.15)(14/12)(16/12)(9') = 29.46^k$

Average over $9' \times 22' = 0.149$ ksf

Tower Area above rest of Bldg

Average weight of stairwell portion ~ 150 psf

6" slab $= \left(\frac{6''}{12}\right)(150pcf) = 75psf$

Wall weight $= (8/12)(150psf) + 38psf = 138psf$ vertical area

Total Weight =

$(150psf)(22')(9') + (75psf)(22')(13') + (138psf)(105')(88') = 179^K$
@ upper floors

$(4/12)(150)(22')(22') + (138psf)\left(\frac{105'}{2}\right)(88) = 88^K$ @ Roof

Degenkolb

Subject: Gravity loads for Jet Grouting	Job Number A7437007	Date 7/24/07	
Job Fire Station 1	By DAL	Section	
	Checked By	Page	of

Consider Gravity loads on Walls for design of Jet Grouting

North Wall

Wall Self weight $\left[\left(\frac{14''}{12}\right)(14') + \left(\frac{9''}{12}\right)(47')\right](150pcf) + (40psf)(47') = 96$ klf

1st Flr = $(\overset{DL}{50} + \overset{LL}{100})psf\,(5') = 0.75$ klf

2nd Flr - Roof Same ⇒ 0.75 klf

Total = 12.6 k/ft (ASD)

West Wall

Wall Selfweight 9.6 klf

1st Flr = $(\overset{DL}{50} + \overset{LL}{100}psf)(9') = 1.4$ klf

2nd Flr - Roof Same = 1.4 klf

Total = 15.2 klf (ASD)

Drill Tower

Wall Self weight $\left[\left(\frac{14}{12}\right)(14') + \left(\frac{9}{12}\right)(74')\right](150pcf) + (40psf)(74') = 13.8$ klf

Floors $(\overset{DL}{50}psf + \overset{LL}{50}psf)(10') = 1.0$ klf

Total = 20.8 klf (ASD)

Degenkolb

Subject Mass Takeoff		Job Number A7437007	Date 6/13/07
Job Fire Station 1		By DAL	Section
		Checked By	Page of

1st Flr

Pan Joist = $\frac{0.15[(5.5/12)(10/12)+(1.66)(3/12)]}{2.125'}$ = 0.056 ksf

Beams = 0.02

Cols = 0.02

Trucks/Equip ≈ 0.015 ksf

Misc = 0.005 ksf

Walls = (6')(14/12)(502')(150pcf) + (8')(9/12)(502)(150) = 979^k

1st Flr Weight = (0.116 ksf)(178')(73') + 979^k = 2486^k

Mass = $\frac{2486^k}{32.2\ ft/sec^2}$ = 77.2 $\frac{k\ sec^2}{ft}$

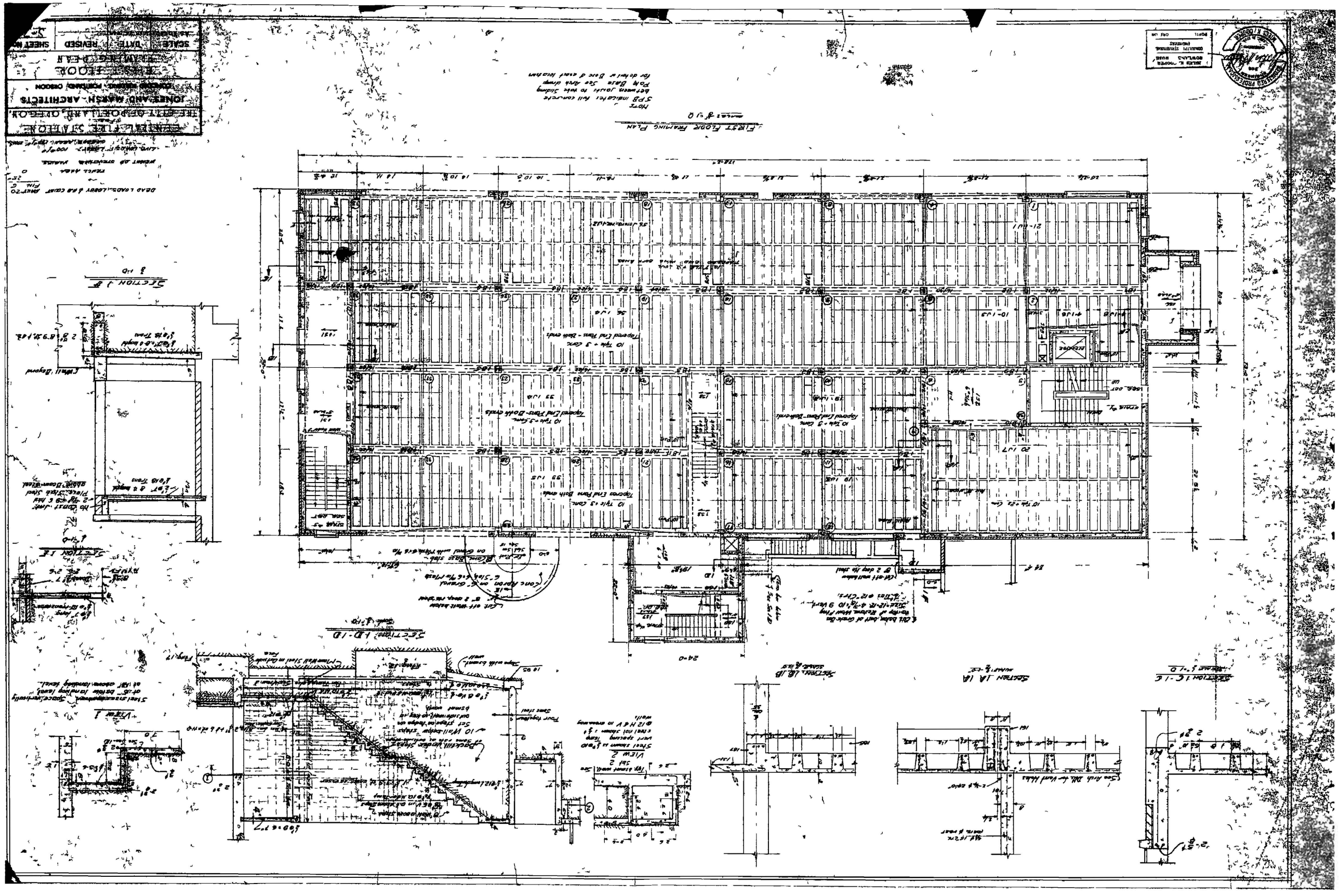
FIRST FLOOR FRAMING PLAN
SECTION 1A-1A
SECTION 1B-1B
SECTION 1C-1C
SECTION 1D-1D
SECTION 1E-1E
SECTION 1F-1F
VIEW 1
VIEW 2
JONES AND MARSH ARCHITECTS
SCALE
DATE
REVISED
SHEET NO.

6000

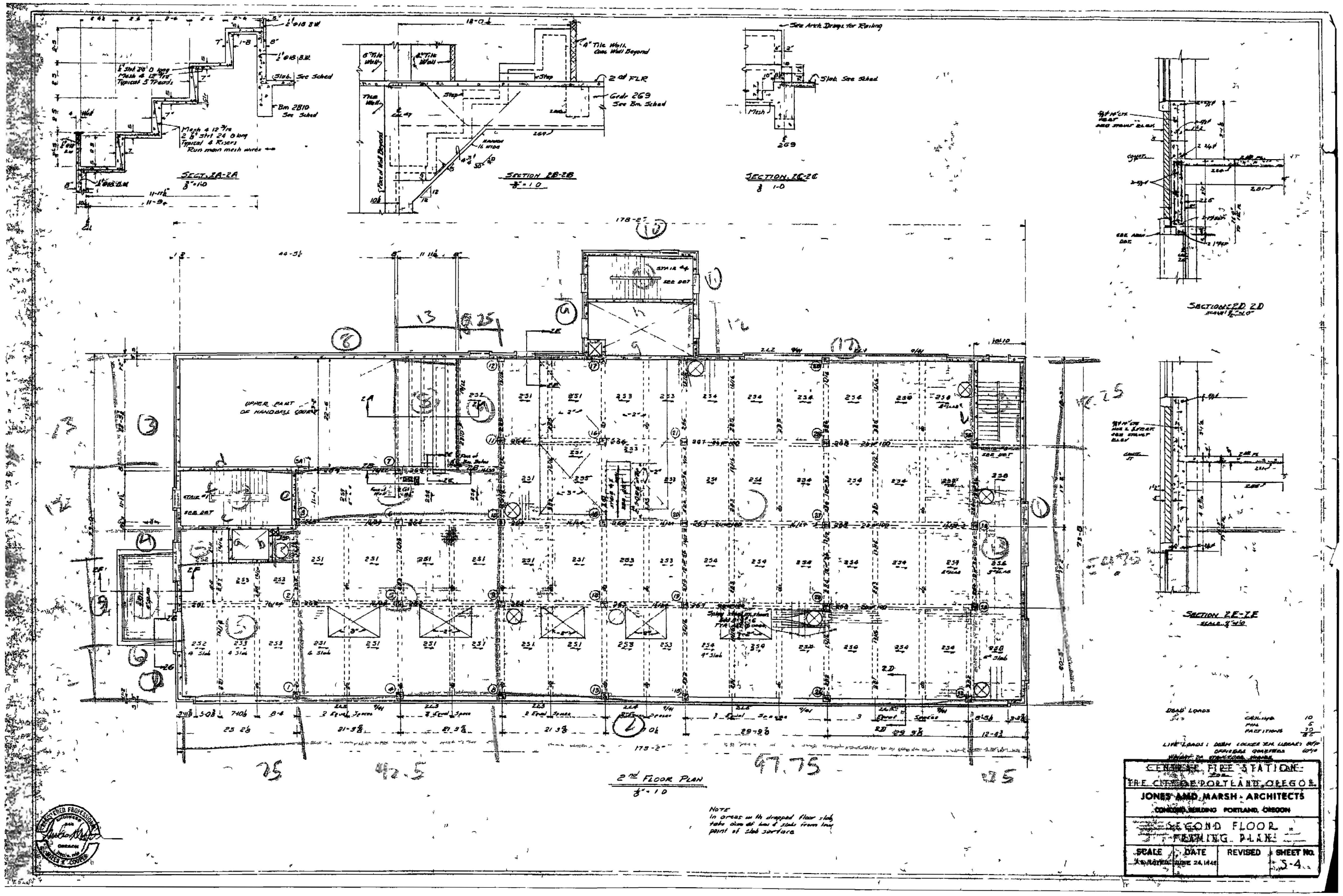
SECT. 2A-2A
SECTION 2B-2B
SECTION 2C-2C
SECTION 2D 2D
SECTION 2E-2E
UPPER PART OF HANDBALL COURT
2nd FLOOR PLAN
NOTE
In areas with dropped floor slab take dim at bot & slab from top point of slab surface
DEAD LOADS
CEILING 10
PAN 5
PARTITIONS 20
35
LIVE LOADS: DORM LOCKER SER LIBRARY 80#
DRAWING CONFERENCE 60#
WEIGHT OF STRUCTURAL FRAME
CENTRAL FIRE STATION
THE CITY OF PORTLAND, OREGON
JONES AND MARSH - ARCHITECTS
CONCORD BUILDING PORTLAND, OREGON
SECOND FLOOR FRAMING PLAN
SCALE
DATE JUNE 24, 1948
REVISED
SHEET No. S-4

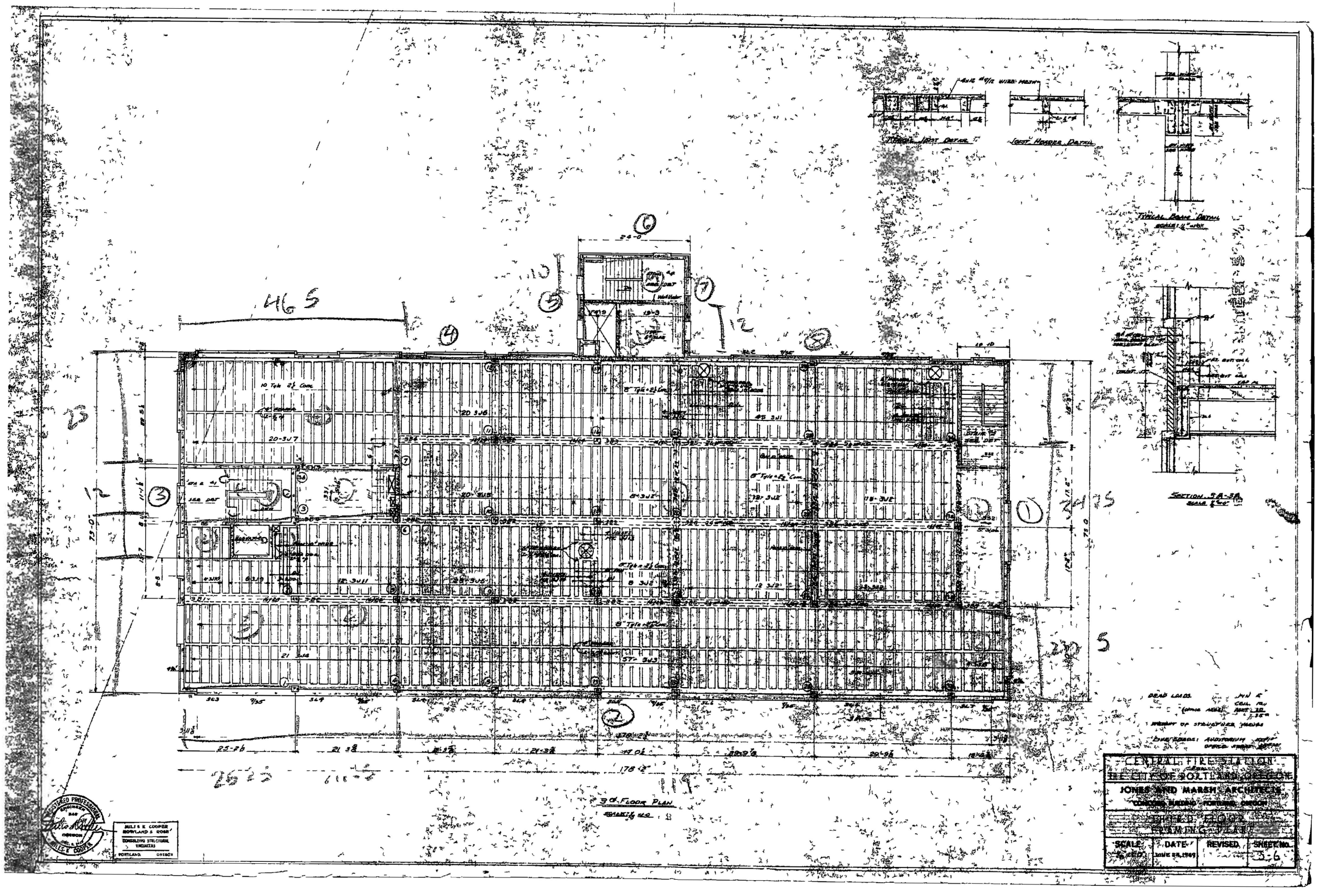
3rd. Floor Plan
Section 5A-5A
Joist Header Detail
Typical Joist Detail
Typical Beam Detail
CENTRAL FIRE STATION
THE CITY OF PORTLAND, OREGON
JONES AND MARSH, ARCHITECTS
FRAMING PLAN
SCALE
DATE
REVISED
SHEET No.
3-6
MILS & K. COOPER
BOWLAND & ROSS
CONSULTING STRUCTURAL ENGINEERS
PORTLAND, OREGON
REGISTERED PROFESSIONAL ENGINEER
MILS K. COOPER

Pre-Heating (Check)

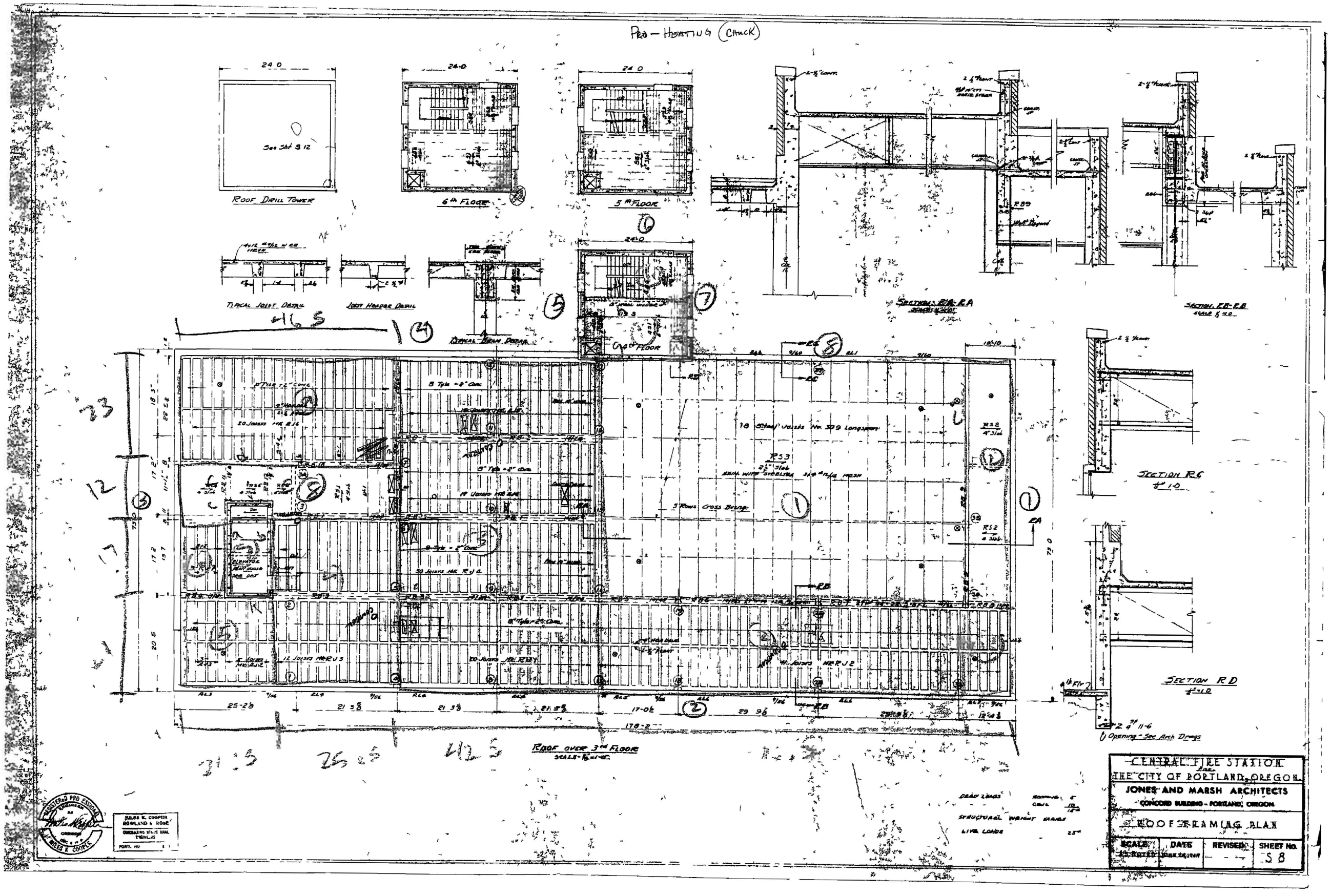

Degenkolb

Subject Mass Summary		Job Number A7437007	Date 6/11/07
Job FS1		By DAL	Section
		Checked By	Page of

Flr	Diaphragm	Ext Walls	Int Walls	Total
2	1605^k	661^k	217^k	2483^k
3	1413^k	661^k	200^k	2274^k
Roof	856	371^k	128^k	1355^k

Ext Walls ≈ 25-30% of "Flr" mass

Degenkolb

Subject: Remove Tower from CM		Job Number A7437007	Date 10/9/07
Job FS 1		By DAL	Section
		Checked By	Page of

Update Model by removing tower from Center of Mass spreadsheet and explicitly placing mass @ corners of tower in Model

2nd Flr remove - Diaphragm 11
- Walls 9, 10, 11, g, h } Remove from Bldg Center of Mass Calc

Total Weight = 215k ⇒ 1.67 $\frac{kft}{sec^2}$ per Node @ each corner of tower

3rd Flr remove - Diaphragm 9, 10
- Walls 5, 6, 7, g, h

Total Weight = 220k ⇒ 17 $\frac{k\,ft^2}{sec^2}$ per Node

Roof remove - Diaphragm 10, 11
- Walls 5, 6, 7, g, h

Total Weight = 145k ⇒ 1.13 $\frac{kft}{sec^2}$ per Node

Typical Tower Flr = 179k ⇒ 138 $\frac{kft}{sec^2}$ per Node

Tower Roof = 88k ⇒ 0.68 kft/sec^2 per Node

Degenkolb

Subject: Add infill to CM	Job Number A7437007	Date 10/12/07	
Job Fire Station 1	By DAL	Section	
	Checked By	Page	of

Update Model by adding infill to CM Spreadsheet

6 1/4" LW Conc on W3 Verco Deck

W = 45psf

Beams 5psf

MEP 5psf

Partitions: 10psf

Misc 3psf

Total = 68psf

Degenkolb

Degenkolb Engineers
707 SW Washington Street, Suite 600
Portland OR 97205-3523
Phone 503 223 8932
Fax 503.242.1780

Subject	Center of Mass	Job Number	A7437007 00	Date	10/12/07
Job	Fire Station 1	By	DAL	Section	
		Checked By		Page/of	

Second Floor

Element		Centroid X (ft)	Centroid Y (ft)	Wt. (ksf/klf)	Element Dimensions b_i (ft)	Element Dimensions h_i (ft)	Wt. (kips)	X*Wt	Y*Wt	Dist From Centroid x_i (ft)	Dist From Centroid y_i (ft)	$w_i(x_i^2+y_i^2)$ (k ft^2)	$w_i(h_i^2+b_i^2)/12$ (k ft^2)
Diaphragm	1	116 60	36 50	0 128	97 75	73 00	913 38	106499 64	33338 22	32 10	0 71	941468 43	1132895 46
Diaphragm	2	46 50	19 00	0 128	42 50	38 00	206 72	9612 48	3927 68	38 00	18 21	367086 03	55990 97
Diaphragm	3	12 63	16 00	0 128	25 25	32 00	103 42	1306 25	1654 78	71 87	21 21	580775 65	14320 45
Diaphragm	4	5 25	22 00	0 050	10 50	20 00	10 50	55 13	231 00	89 75	15 21	87011 64	446 47
Diaphragm	5	5 00	36 00	0 128	10 00	7 00	8 96	44 80	322 56	79 50	1 21	56646 02	111 25
Diaphragm	6	22 50	36 00	0 128	5 25	7 00	4 70	105 84	169 34	62 00	1 21	18090 48	30 01
Diaphragm	7	12 60	44 00	0 149	25 25	12 00	45 15	568 85	1986 47	71 90	6 79	235490 08	2940 43
Diaphragm	8						0 00	0 00	0 00	84 50	37 21	0 00	0 00
Diaphragm	9	89 00	63 60	0 140	8 25	23 00	26 57	2364 29	1689 53	4 50	26 39	19039 03	1321 75
Diaphragm	10	46 50	44 00	0 140	42 50	12 00	71 40	3320 10	3141 60	38 00	6 79	106407 32	11603 99
							0 00	0 00	0 00	84 50	37 21	0 00	0 00
Diaphragm	12	171 75	27 40	0 149	12 50	54 75	101 97	17513 67	2794 03	87 25	9 81	786035 92	26800 01
Diaphragm	13	171 75	63 90	0 140	12 50	18.25	31 94	5485 27	2040 81	87 25	26 69	265864 67	1302 28
New Diaphragm		28 50	61 50	0 068	57 00	23 00	89 15	2540 72	5482 60	56 00	24 29	332193 10	28066 76
							0 00	0 00	0 00	84 50	37 21	0 00	0 00
Ext Wall	1	178 00	36 50	1 246	1 00	73 00	90 94	16187 28	3319 30	93 50	0 71	795022 35	40392 41
Ext Wall	2	89 00	0 00	0 831	178 00	1 00	147 83	13156 78	0 00	4 50	37 21	207664 48	390330 16
Ext Wall	3	0 00	52 50	2 076	1 00	41 00	85 13	0 00	4469 13	84 50	15 29	627760 70	11931 86
Ext Wall	4	5 25	32 00	1 208	10 50	1 00	12 68	66 59	405 89	89 75	5 21	102520 17	117 59
Ext Wall	5	10 50	22 00	0 966	1 00	20 00	19 33	202 94	425 22	95 00	15 21	178915 17	645 88
Ext Wall	6	5 25	12 00	1 208	10 50	1 00	12 68	66 59	152 21	89 75	25 21	110236 77	117 59
Ext Wall	7	89 00	95 00	1 661	1 00	12 00	19 93	1773 95	1893 54	4 50	57 79	66971 34	240 85
Ext Wall	8	38 50	73 00	1 661	77 00	1 00	127 90	4924 03	9336 48	46 00	35 79	434491 31	63202 43
							0 00	0 00	0 00	84 50	37 21	0 00	0 00
							0 00	0 00	0 00	84 50	37 21	0 00	0 00
							0 00	0 00	0 00	84 50	37 21	0 00	0 00
Ext Wall	12	139 50	73 00	0 415	77 00	1 00	31 97	4460 41	2334 12	55 00	35 79	137671 68	15800 61
												0 00	0 00
												0 00	0 00
												0 00	0 00
Int Wall	a	10 00	34 50	1 375	1 00	7 00	9 63	96 25	332 06	74 50	2 71	53495 30	40 10
Int Wall	b	20 00	34 50	1 375	1 00	7 00	9 63	192 50	332 06	64 50	2 71	40116 08	40 10
Int Wall	c	12 63	38 00	1 375	25 25	1 00	34 72	438 32	1319 31	71 88	0 79	179391 47	1847 51
Int Wall	d	12 60	50 00	1 375	25 25	1 00	34 72	437 46	1735 94	71 90	12 79	185174 60	1847 51
Int Wall	e	25 25	44 00	1 375	1 00	12 00	16 50	416 63	726 00	59 25	6 79	58689 92	199 38
Int Wall	f	12 60	44 00	1 375	15 00	1 00	20 63	259 88	907 50	71 90	6 79	107581 52	388 44
							0 00	0 00	0 00	84 50	37 21	0 00	0 00
							0 00	0 00	0 00	84 50	37 21	0 00	0 00
Int Wall	I	165 50	63 90	1 375	1 00	18 25	25 09	4153 02	1603 49	81 00	26 69	182506 79	698 57
							0 00	0 00	0 00	84 50	37 21	0 00	0 00
							0 00	0 00	0 00	84 50	37 21	0 00	0 00
							0 00	0 00	0 00	84 50	37 21	0 00	0 00
							0 00	0 00	0 00	84 50	37 21	0 00	0 00
							0 00	0 00	0 00	84 50	37 21	0 00	0 00
							0 00	0 00	0 00	84 50	37 21	0 00	0 00
						SUM	2313 15	195467 14	86070 88		SUM	7264318 02	1803670 83

Center of Mass	X^1_{cm}=	84 50	ft
	Y_m=	37 21	ft
Weight	Wt =	2313 15	k
Total Area	A=	13101 75	ft^2
Unit Weight	W=	176 55	psf
mass (g=32 2ft/sec^2)	mass=	71 84	k sec^2/ft
mass moment of inertia	M =	281614 56	k ft sec^2

Degenkolb

Degenkolb Engineers
707 SW Washington Street, Suite 800
Portland OR 97205-3523
Phone 503.223.8932
Fax 503.242 1780

Subject	Center of Mass	Job Number	A7437007 00	Date	10/12/07
Job	Fire Station 1	By	DAL	Section	
		Checked By		Page/of	

Third Floor

Element		Centroid X (ft)	Centroid Y (ft)	Wt (ksf/klf))	Element Dimensions b_i (ft)	Element Dimensions h_i (ft)	Wt (kips)	X*Wt	Y*Wt	Dist From Centroid x_i (ft)	Dist From Centroid y_i (ft)	$w_i(x_i^2+y_i^2)$ (k ft^2)	$w_i(h_i^2+b_i^2)/12$ (k ft^2)
Diaphragm	1	106 00	36 50	0 102	119 00	73 00	886 07	93923 84	32341 70	26 34	1 57	616730 91	1439131 86
Diaphragm	2	35 90	19 00	0 102	21 25	38 00	82 37	2956 90	1564 94	43 76	19 07	187695 09	13010 67
Diaphragm	3	12 63	15 50	0 102	25 25	31 00	79 84	1007 99	1237 53	67 04	22 57	399480 58	10635 84
Diaphragm	4	5 00	54 50	0 102	10 00	7 00	7 14	35 70	389 13	74 66	16 43	41732 00	88 66
Diaphragm	5	22 50	54 50	0 102	5 00	7 00	3 57	80 33	194 57	57 16	16 43	12630 02	22 02
Diaphragm	6	35 90	44 00	0 116	21 25	12 00	29 58	1061 92	1301 52	43 76	5 93	57696 31	1468 06
Diaphragm	7	12 63	44 00	0 149	25 25	12 00	45 15	570 21	1986 47	67 03	5 93	204461 59	2940 43
Diaphragm	8	25 25	61 50	0 105	46 50	23 00	112 30	2835 51	6906 30	54 41	23 43	394170 45	25185 05
							0 00	0 00	0 00	79 66	38 07	0 00	0 00
							0 00	0 00	0 00	79 66	38 07	0 00	0 00
Diaphragm	11	66 75	63 90	0 149	12 50	18 25	33 99	2268 87	2172 00	12 91	25 83	28353 92	1386 00
Diaphragm	12	66 75	37 60	0 116	12 50	34 25	49 66	3314 97	1867 31	12 91	0 47	8293 34	5501 42
Diaphragm	13	66 75	10 25	0 102	12 50	20 50	26 14	1744 68	267 91	12 91	27 82	24582 59	1255 69
							0 00	0 00	0 00	79 66	38 07	0 00	0 00
							0 00	0 00	0 00	79 66	38 07	0 00	0 00
Ext Wall	1	178 00	36 50	1 321	1 00	73 00	96 45	17168 32	3520 47	98 34	1 57	932913 16	42840 43
Ext Wall	2	89 00	0 00	0 944	178 00	1 00	167 99	14950 89	0 00	9 34	38 07	258059 44	443556 99
Ext Wall	3	0 00	36 50	1 321	1 00	73 00	96 45	0 00	3520 47	79 66	1 57	612353 44	42840 43
Ext Wall	4	38 50	73 00	1 510	77 00	1 00	116 27	4476 40	8487 71	41 16	34 93	338912 15	57456 76
							0 00	0 00	0 00	79 66	38 07	0 00	0 00
							0 00	0 00	0 00	79 66	38 07	0 00	0 00
							0 00	0 00	0 00	79 66	38 07	0 00	0 00
Ext Wall	8	139 50	73 00	1 057	77 00	1 00	81 39	11353 77	5941 40	59 84	34 93	390724 30	40219 73
							0 00	0 00	0 00	79 66	38 07	0 00	0 00
							0 00	0 00	0 00	79 66	38 07	0 00	0 00
Int Wall	a	10 00	34 50	1 250	1 00	7 00	8 75	87 50	301 88	69 66	3 57	42575 92	36 46
Int Wall	b	20 00	34 50	1 250	1 00	7 00	8 75	175 00	301 88	59 66	3 57	31259 68	36 46
Int Wall	c	12 63	38 00	1 250	25 25	1 00	31 56	398 48	1199 38	67 04	0 07	141850 08	1679 55
Int Wall	d	12 60	50 00	1 250	25 25	1 00	31 56	397 69	1578 13	67 06	11 93	146450 85	1679 55
Int Wall	e	25 25	44 00	1 250	1 00	12 00	15 00	378 75	660 00	54 41	5 93	44941 77	181 25
Int Wall	f	12 60	44 00	1 250	15 00	1 00	18 75	236 25	825 00	67 06	5 93	84990 37	353 13
							0 00	0 00	0 00	79 66	38 07	0 00	0 00
							0 00	0 00	0 00	79 66	38 07	0 00	0 00
Int Wall	1	165 50	63 90	1 400	1 00	18 25	25 55	4228 53	1632 65	85 84	25 83	205298 72	711 27
							0 00	0 00	0 00	79 66	38 07	0 00	0 00
							0 00	0 00	0 00	79 66	38 07	0 00	0 00
							0 00	0 00	0 00	79 66	38 07	0 00	0 00
							0 00	0 00	0 00	79 66	38 07	0 00	0 00
							0 00	0 00	0 00	79 66	38 07	0 00	0 00
							0 00	0 00	0 00	79 66	38 07	0 00	0 00
						SUM	2054 28	163652 48	78198 31		SUM	5206156 70	2132217 70

Center of Mass	X_{cm}=	79 66	ft
	Y_{cm}=	38 07	ft
Weight	Wt =	2054 28	k
Total Area	A=	12922 25	ft^2
Unit Weight	W=	158 97	psf
mass (g=32 2ft/sec^2)	mass=	63 80	k sec^2/ft
mass moment of inertia	M_{zz}=	227899 83	k ft-sec^2

Degenkolb

Degenkolb Engineers
707 SW Washington Street, Suite 600
Portland OR 97205-3523
Phone 503.223.9932
Fax 503.242.1780

Subject	Center of Mass	Job Number	A7437007 00	Date	10/12/07
Job	Fire Station 1	By	DAL	Section	
		Checked By		Page/of	

Forth Floor

Element		Centroid X (ft)	Centroid Y (ft)	Wt (ksf/klf))	Element Dimensions b_i (ft)	Element Dimensions h_i (ft)	Wt (kips)	X*Wt	Y*Wt	Dist From Centroid x_i (ft)	Dist From Centroid y_i (ft)	$w_i(x_i^2+y_i^2)$ (k ft^2)	$w_i(h_i^2+b_i^2)/12$ (k ft^2)
Diaphragm	1	127 25	47 00	0 040	76 50	52 00	159 12	20248 02	7478 64	47 63	10 04	376984 02	113455 88
Diaphragm	2	127 25	10 50	0 070	76 50	21 00	112 46	14309 90	1180 78	47 63	26 46	333829 42	58975 62
Diaphragm	3	67 75	36 50	0 070	42 50	73 00	217 18	14713 61	7926 89	11 87	0 46	30657 51	129133 16
Diaphragm	4	33 90	19 00	0 070	25 25	38 00	67 17	2276 89	1276 14	45 72	17 96	162077 18	11650 68
Diaphragm	5	10 60	10 50	0 070	21 25	21 00	31 24	331 12	327 99	69 02	26 46	170689 60	2323 45
Diaphragm	6	5 00	29 50	0 070	10 00	17 00	11 90	59 50	351 05	74 62	7 46	66927 47	385 76
Diaphragm	7	15 00	29 50	0 120	10 00	17 00	20 40	306 00	601 80	64 62	7 46	86326 89	661 30
Diaphragm	8	23 25	44 00	0 078	46 50	12 00	43 25	1005 45	1902 78	56 37	7 04	139568 67	8311 15
Diaphragm	9	23 25	61 50	0 074	46 50	23 00	79 14	1840 07	4867 29	56 37	24 54	299162 18	17749 47
							0 00	0 00	0 00	79 62	36 96	0 00	0 00
							0 00	0 00	0 00	79 62	36 96	0 00	0 00
Diaphragm	12	171 80	47 00	0 060	12 40	52 00	38 69	6646 60	1818 34	92 18	10 04	332620 33	9213 42
Diaphragm	13	171 80	10 50	0 070	12 40	21 00	18 23	3131 57	191 39	92 18	26 46	167640 83	903 44
							0 00	0 00	0 00	79 62	36 96	0 00	0 00
							0 00	0 00	0 00	79 62	36 96	0 00	0 00
Ext Wall	1	178 00	36 50	0 713	1 00	73 00	52 08	9270 89	1901 05	98 38	0 46	504085 25	23133 83
Ext Wall	2	89 00	0 00	0 510	178 00	1 00	90 71	8073 48	0 00	9 38	36 96	131899 96	239520 78
Ext Wall	3	0 00	36 50	0 713	1 00	73 00	52 08	0 00	1901 05	79 62	0 46	330206 93	23133 83
Ext Wall	4	38 50	73 00	0 815	77 00	1 00	62 79	2417 25	4583 36	41 12	36 04	187722 06	31026 65
							0 00	0 00	0 00	79 62	36 96	0 00	0 00
							0 00	0 00	0 00	79 62	36 96	0 00	0 00
							0 00	0 00	0 00	79 62	36 96	0 00	0 00
Ext Wall	8	139 50	73 00	0 747	77 00	1 00	57 55	8028 73	4201 42	59 88	36 04	281101 54	28441 10
							0 00	0 00	0 00	79 62	36 96	0 00	0 00
							0 00	0 00	0 00	79 62	36 96	0 00	0 00
Int Wall	a	10 00	34 50	1 475	1 00	7 00	10 33	103 25	356 21	69 62	2 46	50110 60	43 02
Int Wall	b	20 00	34 50	1 475	1 00	7 00	10 33	206 50	356 21	59 62	2 46	36766 09	43 02
Int Wall	c	12 63	38 00	0 675	25 25	1 00	17 04	215 18	647 66	67 00	1 04	76521 76	906 96
Int Wall	d	12 60	50 00	0 675	25 25	1 00	17 04	214 75	852 19	67 02	13 04	79458 30	906 96
Int Wall	e	25 25	44 00	0 675	1 00	12 00	8 10	204 53	356 40	54 37	7 04	24347 83	97 88
Int Wall	f	12 60	44 00	0 675	15 00	1 00	10 13	127 58	445 50	67 02	7 04	45983 17	190 69
							0 00	0 00	0 00	79 62	36 96	0 00	0 00
							0 00	0 00	0 00	79 62	36 96	0 00	0 00
Int Wall	I	165 50	63 90	0 825	1 00	18 25	15 06	2491 81	962 09	85 88	26 94	121966 12	419 14
Int Wall	J	15 00	38 00	0 400	10 00	1 00	4 00	60 00	152 00	64 62	1 04	16708 52	33 67
Int Wall	k	15 00	21 00	0 400	10 00	1 00	4 00	60 00	84 00	64 62	15 96	17723 17	33 67
							0 00	0 00	0 00	79 62	36 96	0 00	0 00
							0 00	0 00	0 00	79 62	36 96	0 00	0 00
							0 00	0 00	0 00	79 62	36 96	0 00	0 00
							0 00	0 00	0 00	79 62	36 96	0 00	0 00
							0 00	0 00	0 00	79 62	36 96	0 00	0 00
							0 00	0 00	0 00	79 62	36 96	0 00	0 00
						SUM	1210 00	96342 67	44722 25		SUM	4071085 41	700694 50

Center of Mass	X_{cm}=	79 62	ft
	Y_{cm}=	36 96	ft
Weight	Wt =	1210 00	k
Total Area	A=	12965 45	ft^2
Unit Weight	W=	93 32	psf
mass (g=32 2ft/sec^2)	mass=	37 58	k-sec^2/ft
mass moment of inertia	M_{rz}=	148191 92	k ft-sec^2

Degenkolb

Degenkolb Engineers
707 SW Washington Street, Suite 600
Portland OR 97205-3523
Phone 503.223.9932
Fax 503.242 1780

Subject	Center of Mass	Job Number	A7437007 00	Date	10/12/07
Job	Fire Station 1	By	DAL	Section	
		Checked By		Page/of	

Tower Flr

Element		Centroid X (ft)	Centroid Y (ft)	Wt (ksf/klf))	Element Dimensions b_i (ft)	Element Dimensions h_i (ft)	Wt (kips)	X*Wt	Y*Wt	Dist From Centroid x_i (ft)	Dist From Centroid y_i (ft)	$w_i(x_i^2+y_i^2)$ (k ft^2)	$w_i(h_i^2+b_i^2)/12$ (k ft^2)
Diaphragm	1	11 00	17 50	0 150	22 00	9 00	29 70	326 70	519 75	0 00	5 96	1054 90	1398 38
Diaphragm	2	11 00	6 50	0 075	22 00	13 00	21 45	235 95	139 43	0 00	5 04	544 92	1167 24
							0 00	0 00	0 00	11 00	11 54	0 00	0 00
							0 00	0 00	0 00	11 00	11 54	0 00	0 00
							0 00	0 00	0 00	11 00	11 54	0 00	0 00
							0 00	0 00	0 00	11 00	11 54	0 00	0 00
							0 00	0 00	0 00	11 00	11 54	0 00	0 00
							0 00	0 00	0 00	11 00	11 54	0 00	0 00
							0 00	0 00	0 00	11 00	11 54	0 00	0 00
							0 00	0 00	0 00	11 00	11 54	0 00	0 00
							0 00	0 00	0 00	11 00	11 54	0 00	0 00
							0 00	0 00	0 00	11 00	11 54	0 00	0 00
							0 00	0 00	0 00	11 00	11 54	0 00	0 00
							0 00	0 00	0 00	11 00	11 54	0 00	0 00
Ext Wall	1	0 00	11 00	1 449	1 00	22 00	31 88	0 00	350 66	11 00	0 54	3866 54	1288 40
Ext Wall	2	11 00	0 00	1 449	22 00	1 00	31 88	350 66	0 00	0 00	11 54	4245 44	1288 40
Ext Wall	3	11 00	22 00	1 449	22 00	1 00	31 88	350 66	701 32	0 00	10 46	3487 65	1288 40
Ext Wall	4	22 00	11 00	1 449	1 00	22 00	31 88	701 32	350 66	11 00	0 54	3866 54	1288 40
							0 00	0 00	0 00	11 00	11 54	0 00	0 00
							0 00	0 00	0 00	11 00	11 54	0 00	0 00
							0 00	0 00	0 00	11 00	11 54	0 00	0 00
							0 00	0 00	0 00	11 00	11 54	0 00	0 00
							0 00	0 00	0 00	11 00	11 54	0 00	0 00
							0 00	0 00	0 00	11 00	11 54	0 00	0 00
							0 00	0 00	0 00	11 00	11 54	0 00	0 00
							0 00	0 00	0 00	11 00	11 54	0 00	0 00
							0 00	0 00	0 00	11 00	11 54	0 00	0 00
							0 00	0 00	0 00	11 00	11 54	0 00	0 00
							0 00	0 00	0 00	11 00	11 54	0 00	0 00
							0 00	0 00	0 00	11 00	11 54	0 00	0 00
							0 00	0 00	0 00	11 00	11 54	0 00	0 00
							0 00	0 00	0 00	11 00	11 54	0 00	0 00
							0 00	0 00	0 00	11 00	11 54	0 00	0 00
							0 00	0 00	0 00	11 00	11 54	0 00	0 00
							0 00	0 00	0 00	11 00	11 54	0 00	0 00
							0 00	0 00	0 00	11 00	11 54	0 00	0 00
						SUM	178 66	1965 28	2061 81		SUM	17065 99	7719 22

Center of Mass	X_{cm}=	11 00	ft
	Y_{cm}=	11 54	ft
Weight	Wt =	178 66	k
Total Area	A=	484 00	ft^2
Unit Weight	W=	369 14	psf
mass (g=32 2ft/sec^2)	mass=	5 55	k sec^2/ft
mass moment of inertia	M_{cr}=	769 73	k ft-sec^2

Degenkolb

Degenkolb Engineers
707 SW Washington Street, Suite 600
Portland OR 97205-3523
Phone 503.223 9932
Fax 503.242 1760

Subject	Center of Mass	Job Number	A7437007 00	Date	10/12/07
Job	Fire Station 1	By	DAL	Section	
		Checked By		Page/of	

Tower Roof

Element		Centroid X (ft)	Centroid Y (ft)	Wt (ksf/klf)	Element Dimensions b_i (ft)	Element Dimensions h_i (ft)	Wt (kips)	X*Wt	Y*Wt	Dist From Centroid x_i (ft)	Dist From Centroid y_i (ft)	$w_i(x_i^2+y_i^2)$ (k ft^2)	$w_i(b_i^2+h_i^2)/12$ (k ft^2)
Diaphragm	1	11 00	11 00	0 050	22 00	22 00	24 20	266 20	266 20	0 00	0 00	0 00	1952 13
							0 00	0 00	0 00	11 00	11 00	0 00	0 00
							0 00	0 00	0 00	11 00	11 00	0 00	0 00
							0 00	0 00	0 00	11 00	11 00	0 00	0 00
							0 00	0 00	0 00	11 00	11 00	0 00	0 00
							0 00	0 00	0 00	11 00	11 00	0 00	0 00
							0 00	0 00	0 00	11 00	11 00	0 00	0 00
							0 00	0 00	0 00	11 00	11 00	0 00	0 00
							0 00	0 00	0 00	11 00	11 00	0 00	0 00
							0 00	0 00	0 00	11 00	11 00	0 00	0 00
							0 00	0 00	0 00	11 00	11 00	0 00	0 00
							0 00	0 00	0 00	11 00	11 00	0 00	0 00
							0 00	0 00	0 00	11 00	11 00	0 00	0 00
							0 00	0 00	0 00	11 00	11 00	0 00	0 00
Ext Wall	1	0 00	11 00	0 725	1 00	22 00	15 95	0 00	175 45	11 00	0 00	1929 95	644 65
Ext Wall	2	11 00	0 00	0 725	22 00	1 00	15 95	175 45	0 00	0 00	11 00	1929 95	644 65
Ext Wall	3	11 00	22 00	0 725	22 00	1 00	15 95	175 45	350 90	0 00	11 00	1929 95	644 65
Ext Wall	4	22 00	11 00	0 725	1 00	22 00	15 95	350 90	175 45	11 00	0 00	1929 95	644 65
							0 00	0 00	0 00	11 00	11 00	0 00	0 00
							0 00	0 00	0 00	11 00	11 00	0 00	0 00
							0 00	0 00	0 00	11 00	11 00	0 00	0 00
							0 00	0 00	0 00	11 00	11 00	0 00	0 00
							0 00	0 00	0 00	11 00	11 00	0 00	0 00
							0 00	0 00	0 00	11 00	11 00	0 00	0 00
							0 00	0 00	0 00	11 00	11 00	0 00	0 00
							0 00	0 00	0 00	11 00	11 00	0 00	0 00
							0 00	0 00	0 00	11 00	11 00	0 00	0 00
							0 00	0 00	0 00	11 00	11 00	0 00	0 00
							0 00	0 00	0 00	11 00	11 00	0 00	0 00
							0 00	0 00	0 00	11 00	11 00	0 00	0 00
							0 00	0 00	0 00	11 00	11 00	0 00	0 00
							0 00	0 00	0 00	11 00	11 00	0 00	0 00
							0 00	0 00	0 00	11 00	11 00	0 00	0 00
							0 00	0 00	0 00	11 00	11 00	0 00	0 00
							0 00	0 00	0 00	11 00	11 00	0 00	0 00
							0 00	0 00	0 00	11 00	11 00	0 00	0 00
							0 00	0 00	0 00	11 00	11 00	0 00	0 00
							0 00	0 00	0 00	11 00	11 00	0 00	0 00
						SUM	88 00	968 00	968 00		SUM	7719 80	4530 72

Center of Mass	X_{cm}=	11 00	ft
	Y_{cm}=	11 00	ft
Weight	Wt =	88 00	k
Total Area	A=	484 00	ft^2
Unit Weight	W=	181 82	psf
mass (g=32.2ft/sec^2)	mass=	2 73	k-sec^2/ft
mass moment of inertia	M_{rz}=	380 45	k ft-sec^2

Degenkolb

Subject	Modeling Parameters	Job Number	A7437007
Job	FS1	By	DAL
		Checked By	
Date	5/30/07	Section	
Page	of		

Response Sepectrum · Based on ASCE 31

T	Sa
0	0.728
0.2	0.728
0.53	0.728
0.6	0.653
0.7	0.560
0.8	0.490
1.0	0.392

$F_a = 1.11$

$F_v = 1.71$

$S_{DS} = 2/3\,(1.11)(0.9834) = 0.728$

$S_{D1} = 2/3\,(1.71)(0.3438) = 0.392$

$S_a = \frac{S_{D1}}{T}$ but Not less than S_{DS}

Center of Mass

Flr Area ≈ 13450 ft²

2nd Flr	x = 86.31' y = 40.26'	Weight = 2484ᵏ = 185 psf
3rd Flr.	x = 80.57' y = 41.91'	Weight = 2274ᵏ = 169 psf
Roof	x = 80.63' y = 41.50'	Weight = 1355ᵏ = 100 psf

Site-Specific Design Spectra

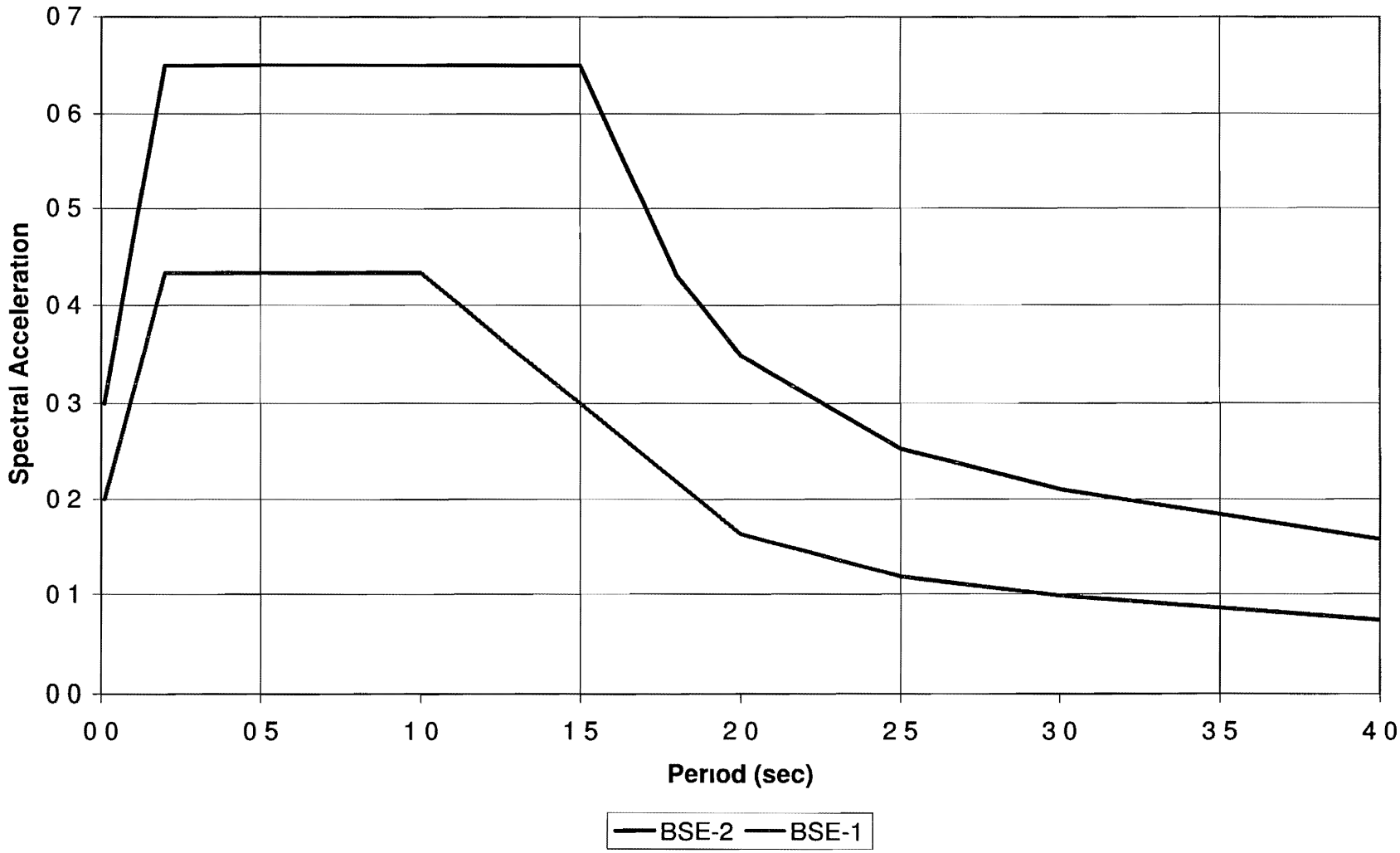

0022

Degenkolb

Subject	General Results	Job Number	A7437007
Job	Fire Station 1	By	DAL
		Checked By	
Date	6/13/07	Section	
Page	of		

Flr	Weight	Shear Demand E/W	Shear Demand N/S	acceleration E/W	acceleration N/S	Diaphragm Load E/W	Diaphragm Load N/S
Roof	1355	1931	1840	1.42	1.36	1931	1840
3rd	2274	3333	3150	0.92	0.87	2089	1974
2nd	2484	4369	4073	0.71	0.67	1775	1655
1st	2486	4728	4355	0.55	0.51	1367	1259

Note Diaphragm Load includes // shear walls, conservative

Degenkolb

Subject. Torsional Analysis		Job Number A74137007	Date 9/20/07
Job FS1		By DAL	Section
		Checked By	Page of

Displacement	δ_A	δ_B	δ_{Avg}	η
Roof	0185"	0141'	0.163"	113
3rd Flr	0118'	0.089'	01035	114
2nd Flr	00668'	0053'	006	111
1st Flr	00084"	00084"	00084"	10

$\therefore A_x = 1.0$ for Bldg

From General results, determine Moments to add to Model to Capture Accidental torsion.

Building width = 72', 178'

Accidental eccentricity = 3.6', 8.9'

Accidental Torsion Moments

Roof	(1931k)(36') = 6952k',	17186k'
3rd Flr	(1402k)(36') = 5047k',	12478k'
2nd Flr	(1036k)(36') = 3730k'	9220k'
	↑ long Dir	↑ Transv Dir

Degenkolb

Subject Refined Diaphragm Demands	Job Number A7437007	Date 6/18/07	
Job Fire Station 1	By DAL	Section	
	Checked By	Page	of

- 2nd Flr Diaphragm Demands reduced to reflect Seismic Mass E/W Direction reduced (removed E/W Walls)

Diaphragm = 1570^k
Walls = 240^k + 217^k

Total = 2027^k $\Rightarrow \frac{2027}{2483} = 82\%$

Degenkolb

Subject	Material Properties	Job Number	A7437007 Date 9/21/07
Job	FS1	By	DAL Section
		Checked By	Page of

From Test Results

$f'_c = 2.3$ ksi average
$\sigma = 0.7$ ksi

Note COV > 14% ⇒ $K = 0.75$

$f_y = 52.5$ ksi average
$\sigma = 3.6$ ksi

$K = 1.0$

where K = knowledge factor

For evaluation

$f'_c = (2.3 \text{ ksi})(0.75) = 1.7$ ksi expected
$= (1.6 \text{ ksi})(0.75) = 1.2$ ksi lower bound

$f_y = 52.5$ ksi expected
$= 48.9$ ksi lower bound

Degenkolb

Subject: Wall Capacities: Shear	Job Number A74137007	Date 9/21/07	
Job FS1	By DAL	Section	
	Checked By	Page	of

$V_{ce} = 2\sqrt{f'_c}\, b\, d$ $\qquad f'_c = 17$ ksi

8" Wall = 79 klf
9" Wall = 89 klf
14" Wall = 139 klf

$V_{se} = A_s f_y d/s$ $\qquad f_y = 525$ ksi

8" Wall w/ #5 @ 15" $\quad V_s = 13$ klf
9" Wall w/ #5 @ 14" $\quad V_s = 14$ klf
14" Wall w/ 2#4 @18" $\quad V_s = 14$ klf

Total Expected Capacities

8" Wall = 21 klf
9" Wall = 23 klf
14" Wall = 28 klf

Note Walls do not support much gravity load
gravity columns

M = 20

MATERIAL PROPERTIES
WELDED WIRE FABRIC

Design Aid 11.2 9 Common stock styles of welded wire fabric

Style Designation		Steel Area sq in per ft		Approx Weight
Former Designation (By Steel Wire Gage)	Current Designation (By W-Number)	Longit	Trans	lb per 100 sq ft
6x6 10x10	6x6 W1 4xW1 4	029	029	21
4x12 8x12**	4x12-W2 1xW0 9	062	009	25
6x6 8x8	6x6-W2 1xW2 1	041	041	30
4x4 10x10	4x4 W1 4xW1 4	043	043	31
4x12 7x11**	4x12-W2 5xW1 1	074	011	31
6x6 6x6*	6x6 W2 9xW2 9	058	058	42
4x4 8x8	4x4-W2 1xW2 1	062	062	44
6x6 4x4*	6x6 W4 0xW4 0	080	080	58
4x4 6x6	4x4 W2 9xW2 9	087	087	62
6x6 2x2*	6x6 W5 5xW5 5***	110	110	80
4x4-4x4*	4x4 W4 0xW4 0	120	120	85
4x4-3x3*	4x4 W4 7xW4 7	141	141	102
4x4-2x2*	4x4 W5 5xW5 5***	165	165	119

* Commonly available in 8 ft x 12 ft or 8 ft x 15 ft sheets

** These items may be carried in sheets by various manufacturers in certain parts of the U S and Canada

*** Exact W Number size for 2 gage is 5 4

(Trans size)	d (in)	A
12	0.1046	0.0086 in²
9	0 1495	0 0176 in²

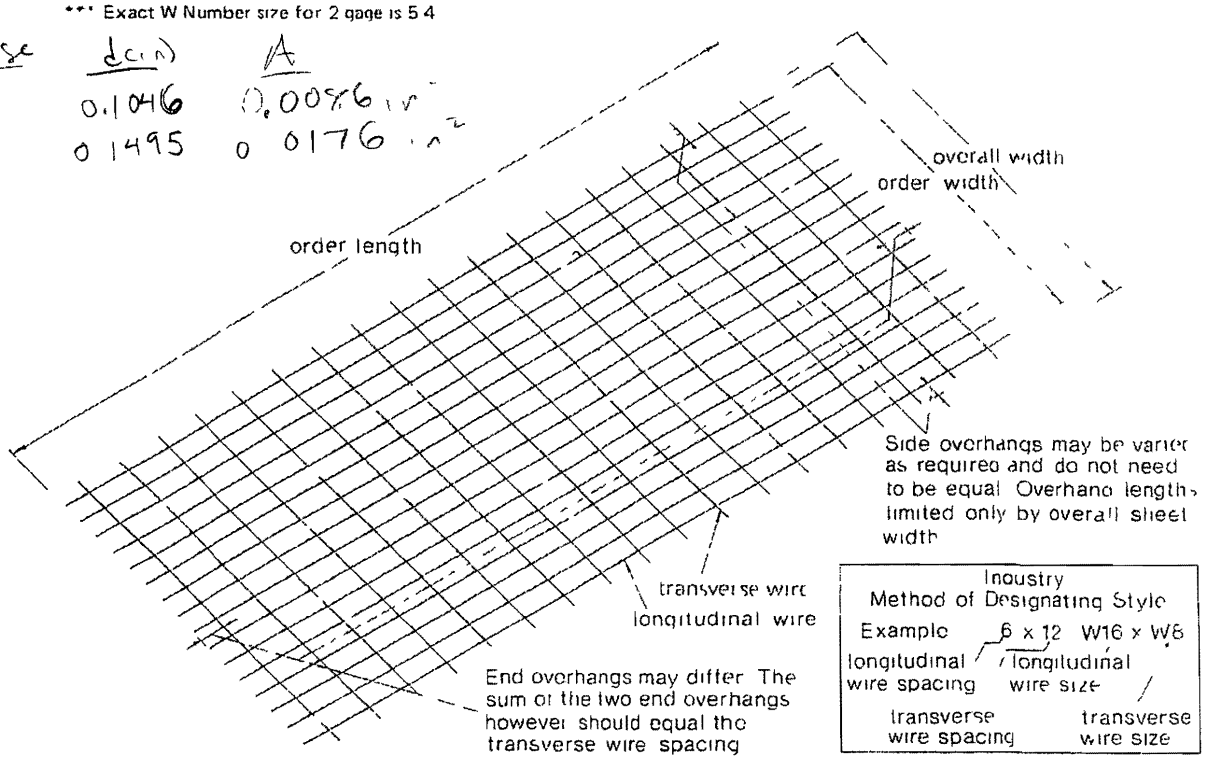

Industry Method of Designating Style

Example 6 x 12 W16 x W8

longitudinal wire spacing — longitudinal wire size

transverse wire spacing — transverse wire size

Degenkolb

Subject Diaphragm Capacities		Job Number A7437007	Date 6/6/07
Job FS1		By DAL	Section
		Checked By	Page of

1st Flr

Mostly 3" Pan (Some 2½", Some 5" or 6' slab)

Pan Reinforcing = 4x12 #9/12 WWF

Assume A185 steel: Table 6-2 => F_y = 65 ksi (Nominal)
= 81.3 ksi (Expected)

$V_c = 2\sqrt{f'_c}\,bd$ ~~f'_c = 3 ksi~~ f'_c = 17 ksi

3" Pan => ~~3.9 klf~~ 30 klf
2½" Pan => ~~3.3 klf~~ 25 klf
5" Slab => ~~6.6 klf~~ 41.9 klf
6" Slab => ~~7.9 klf~~ 59 klf

$V_s = \frac{A_s f_y d}{s}$

2½"/3" Pan => 5 klf (∥ to joists)
0.73 klf (⊥ to joists)

See Results.xls

Degenkolb

Subject	Diaphragm Cord: 1st Flr	Job Number	A7437007
Job	Fire Station 1	By	DAL
		Checked By	
Date	6/19/07	Section	
Page	of		

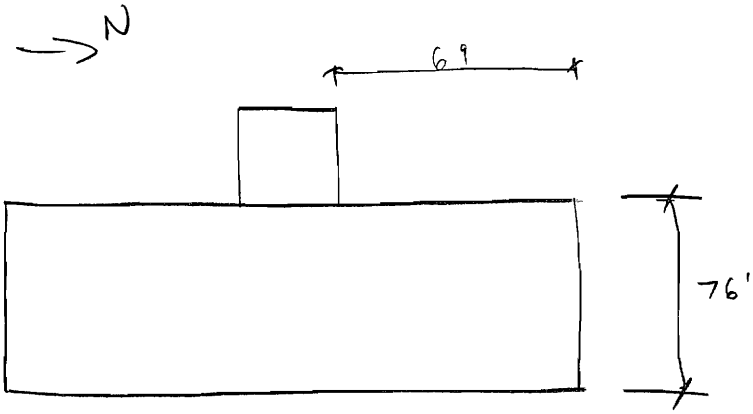

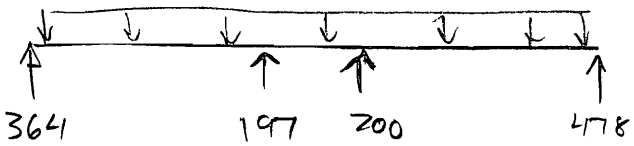

$w \approx \frac{1239^k}{176'} = 7$ klf

$M_{max} = 478x - 7\frac{x^2}{2}$ $\qquad x \approx 68'$

$M_{max} \approx 16320^{k'}$

$M_{cr,\,diaphragm} = \frac{7.5\sqrt{2000}}{1000\,12}\,\frac{(3)(9/12)^2}{6} = 11624 < M_{max}$

$T = \frac{16320^{k'}}{76'} = 215^k$ max

From Moment curvature $\varepsilon_s = 0.00195$

$\varepsilon_y = \frac{4125}{29000} = 0.0014 < \varepsilon_s$ Steel yields

Subject Diaphragm Cord 1st Flr		Job Number A7437007	Date 6/20/07
Job Fire Station 1		By DAL	Section
		Checked By	Page of

$M_u \approx 16320^{k'}$ max

$M_{cr} = 11624^{k'}$

∴ consider how much steel @ ends of diaphragm is necessary to withstand M_u until $M_{cr} > M_u$

From Moment Curvature

$M_{CE} = M_u$ if we consider wall reinforcing below 1st Flr consisting of (2) #4 @ 18" O.C

We need ~3 rows of bars in the wall

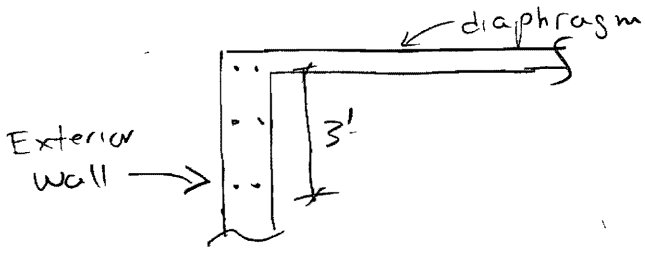

How far to South do we need this condition?

$11624^{k'} = 364x - \frac{7x^2}{2} \Rightarrow -3.5x^2 + 364x - 11624 = 0$

$x \approx$ N.A.

Moment Never Exceeds M_{cr}

∴ Don't Need to strengthen South of tower

Subject Diaphragm Cord 1st Flr		Job Number A7437007	Date 6/20/07
Job Fire Station 1		By DAL	Section
		Checked By	Page of

Consider shear friction from wall to diaphragm.

$q = \frac{VQ}{I}$ However. To Solve for Q and I, I would have to use a transformed section...

Another way to Solve for shear friction is to consider the following.

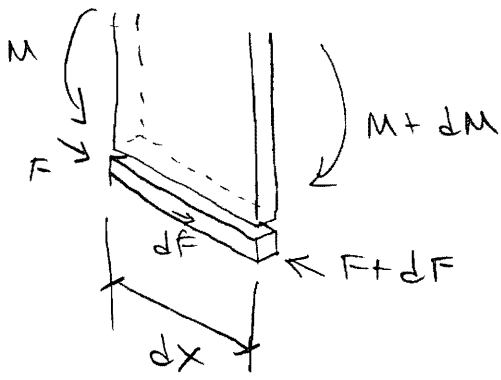

$M = 478x - \frac{7x^2}{2}$

Remember $V = \frac{dM}{dx} = 478 - 7x$

$\therefore$ look @ $x \approx 0$

Solve for dM @ 1' Intervals and find dF per foot

$M(x=1) = 474.5^{k'}$
$M(x=2) = 942^{k'}$ } $dM = 467.5^{k'}$

This must be transfered to Cord $\Delta T = \frac{\Delta M}{h}$

$\Delta T = \frac{467.5^{k'}}{76'} = 6.2^{k}$ over 1' interval
max

$\therefore q = 6.2^{k}/ft$ max < $18.9^{k}/ft$ shear friction capacity

$\therefore$ Shear friction ok

Degenkolb

Subject Diaphragm Cord · 2nd Flr		Job Number A7437007	Date 6/11/07
Job FS1		By DAL	Section
		Checked By	Page of

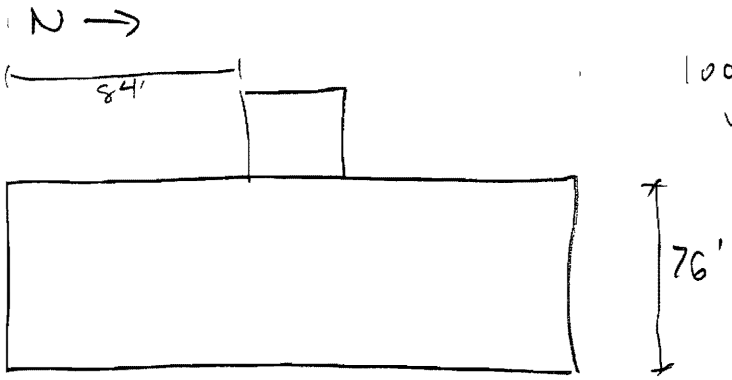

look @ 2nd Flr
w/ E/W Demands

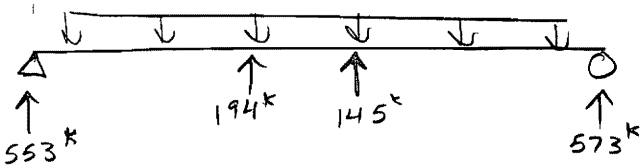

$w = \frac{1465}{176'} = 83$ klf

$M_{max} = 553x - \frac{83x^2}{2} + 194(x-84)$ @ $x \approx 90$

$M_{max} \approx 17319^{k'}$

Tension Chord $= \frac{17319^{k'}}{76'} = 228^k$ assuming Diaphragm doesnt help

$M_{cr,diaphragm} = \frac{7.5\sqrt{2000}}{1000\ 12} \frac{(4")(912")^2}{6} = 15500^{k'} < M_{max}$

Diaphragm will crack

∴ Cord Demand must be resisted by tension "collector"

Degenkolb

Subject Diaphragm Cord 2nd Flr		Job Number A74370007	Date 6/20/07
Job Fire Station 1		By DAL	Section
		Checked By	Page of

Consider Shear friction from Cord to Diaphragm

$M(x=1) = 549^{k'}$
$M(x=2) = 1089^{k'}$ } $dM = 540^{k'}$

$\Delta T = \frac{540^{k'}}{76} = 71^{k}/ft$ > Shear friction Capacity @ 2nd Flr E/W walls

max

Increase Shear friction capacity w/ Beam Bars

(2) 1" ø + 2(3/8") @ 10'

$1.58 in^2 + 0.62 in^2 = 2.2 in^2/10'$

$0.22 in^2/ft$

$V_f = (0.22)(41.25)(1.4) =$

$V_f = 12.7^{k}/ft$

Subject Diaphragm Cord · 3rd Flr		Job Number A7437007	Date 6/19/07
Job Fire Station 1		By DAL	Section
		Checked By	Page of

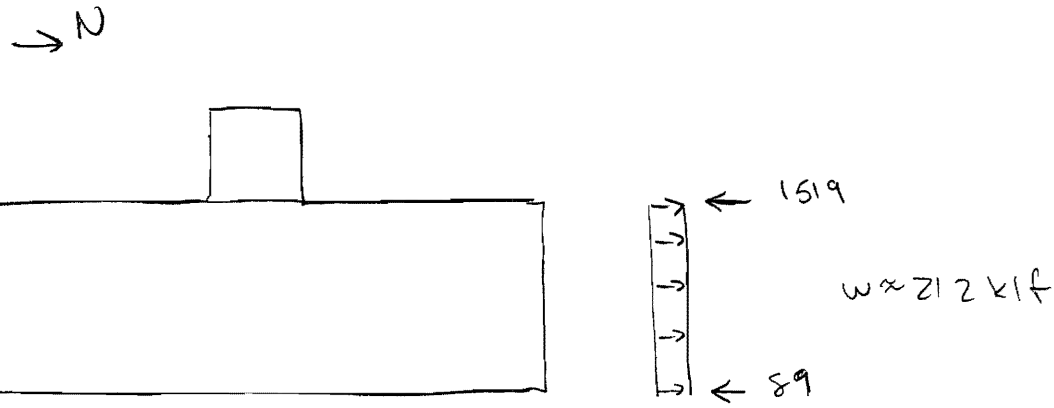

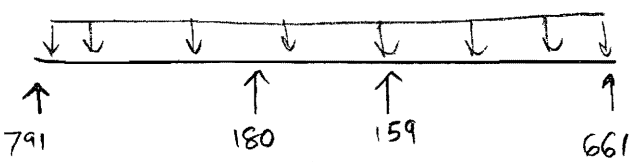

$w \approx \frac{1791}{176} = 10.2$ k/f

E/W Demand

$M_{max} = 791x - \frac{10.2x^2}{2} + 180(x-84)$ $\quad x \approx 95'$

$M_{max} \approx 31098$ k'

Tension Cord $= \frac{31098}{76'} = 410^k$

∴ Strengthen chord collectors on E/W sides

N/S Demand

$M_{max} = 1519x - \frac{21.2x^2}{2}$ $\quad x \approx 72'$

$M_{max} \approx 54418$ k'

$M_{cr} = \frac{7.5\sqrt{2000}}{1000 \cdot 12} \frac{(2.5'')(2112'')^2}{6} = 51950$ k' $\approx M_{max}$

Degenkolb

Subject Diaphragm Cord 3rd Flr	Job Number A7437007	Date 6/20/07	
Job Fire Station 1	By DAL	Section	
	Checked By	Page	of

Consider Shear friction from Cord to Diaphragm

$$\left.\begin{array}{l} M(x=1) = 786^{k'} \\ M(x=2) = 1562^{k'} \end{array}\right\} dM = 776^{k'}$$

$$\Delta T = \frac{776^{k'}}{76'} = 10.2 \text{ klf max}$$

$V_f = 12.5$ klf $> \Delta T$

$\therefore$ Shear flow <u>ok</u>

Degenkolb

Subject Diaphragm Cord Roof		Job Number A7437007	Date 6/11/07
Job Fire Station 1		By DAL	Section
		Checked By	Page of

→ N

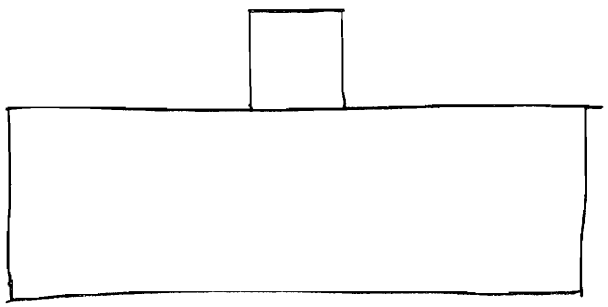

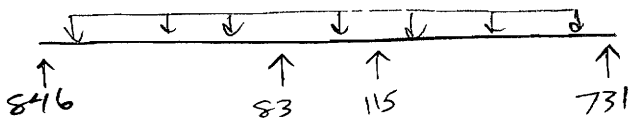

$w = \frac{1775}{176} = 10.1$ klf

$M_{max} = 846x - \frac{10.1x^2}{2} + 83(x-84)$ $\quad x \approx 92'$

$M_{max} \approx 35753^{k'}$

Tension Chord $= \frac{35753^{k'}}{76'} = 470^k$

∴ Strengthen Cord

Section cut Definitions

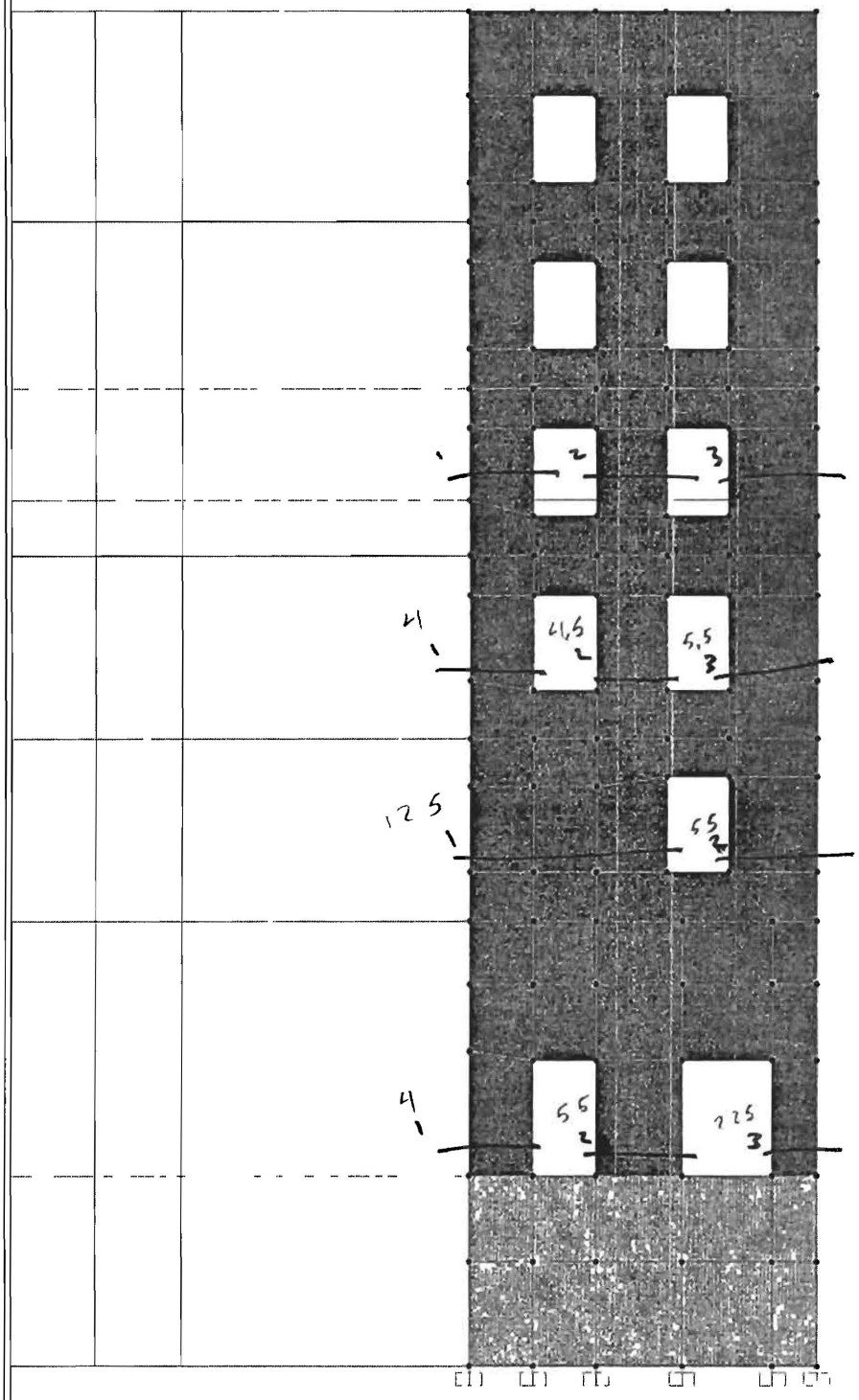

SAP2000 v9 2 0 - File FS1 - Y-Z Plane @ X=107 - Kip, ft, F Units

North Face

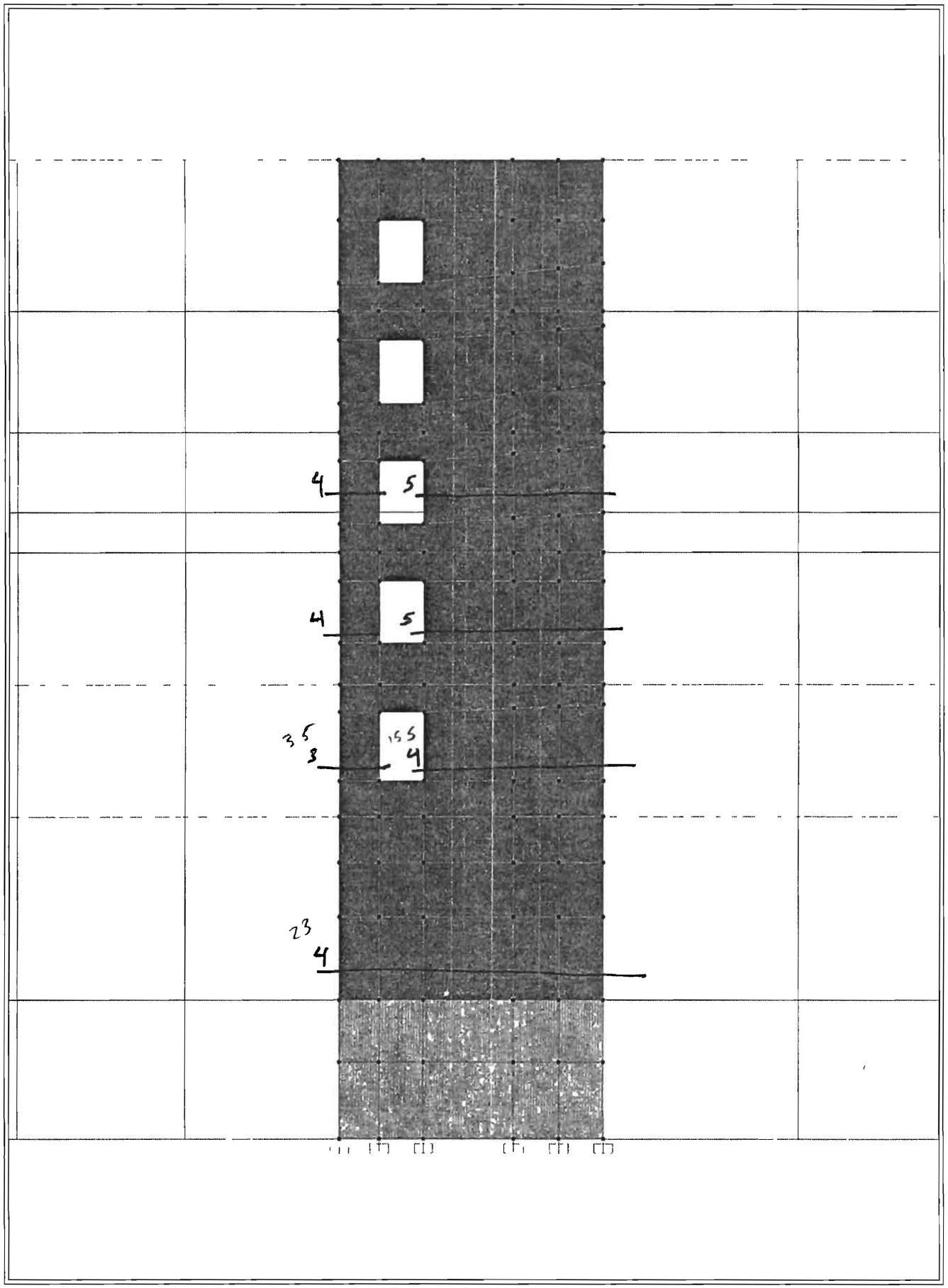

SAP2000 v9 2 0 - File FS1 - X-Z Plane @ Y=94 - Kip, ft, F Units

West Face

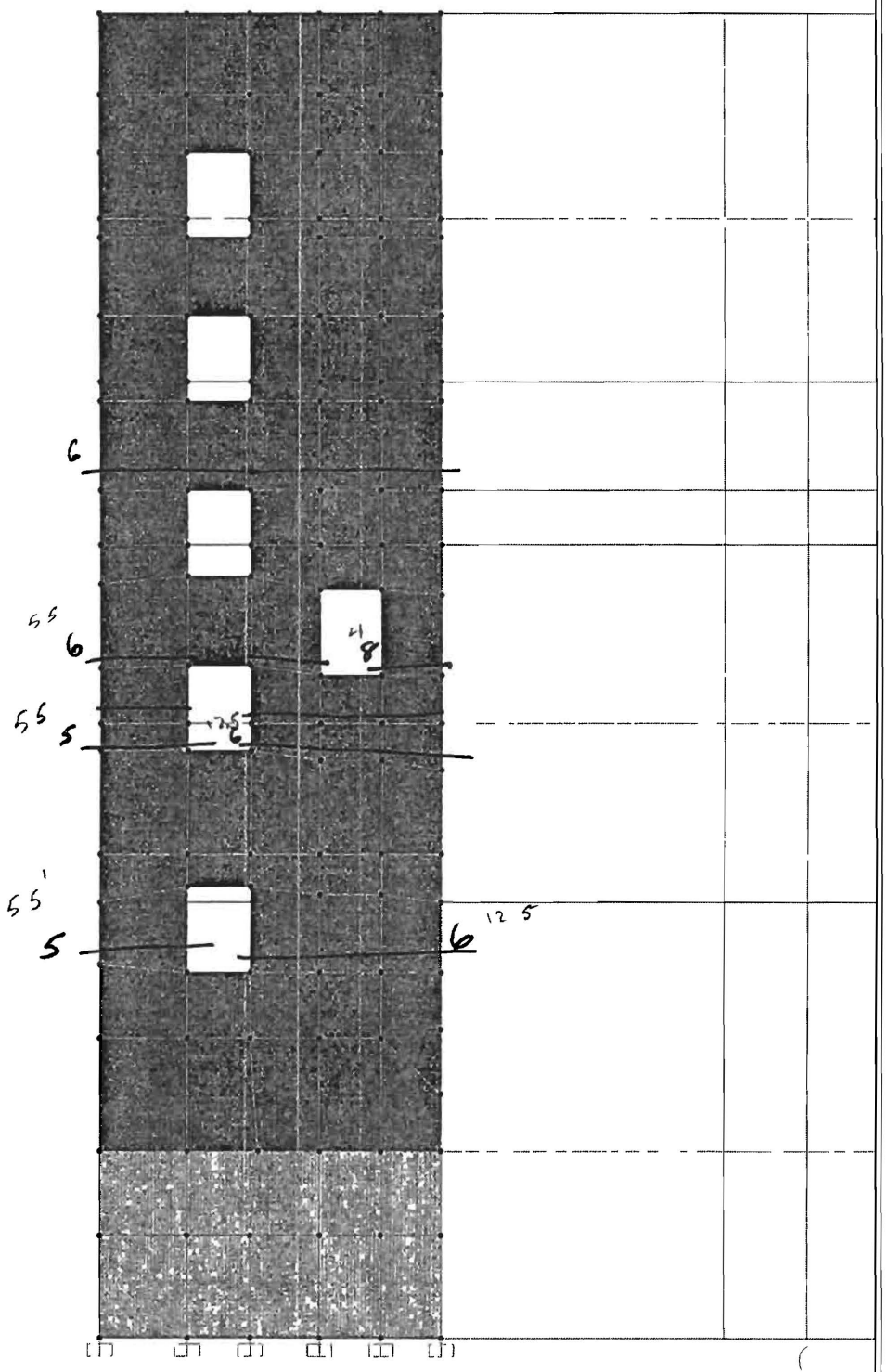

SAP2000 v9 2 0 - File FS1 - Y-Z Plane @ X=84 - Kip, ft, F Units

South

SAP2000

5/31/07 15 32 47

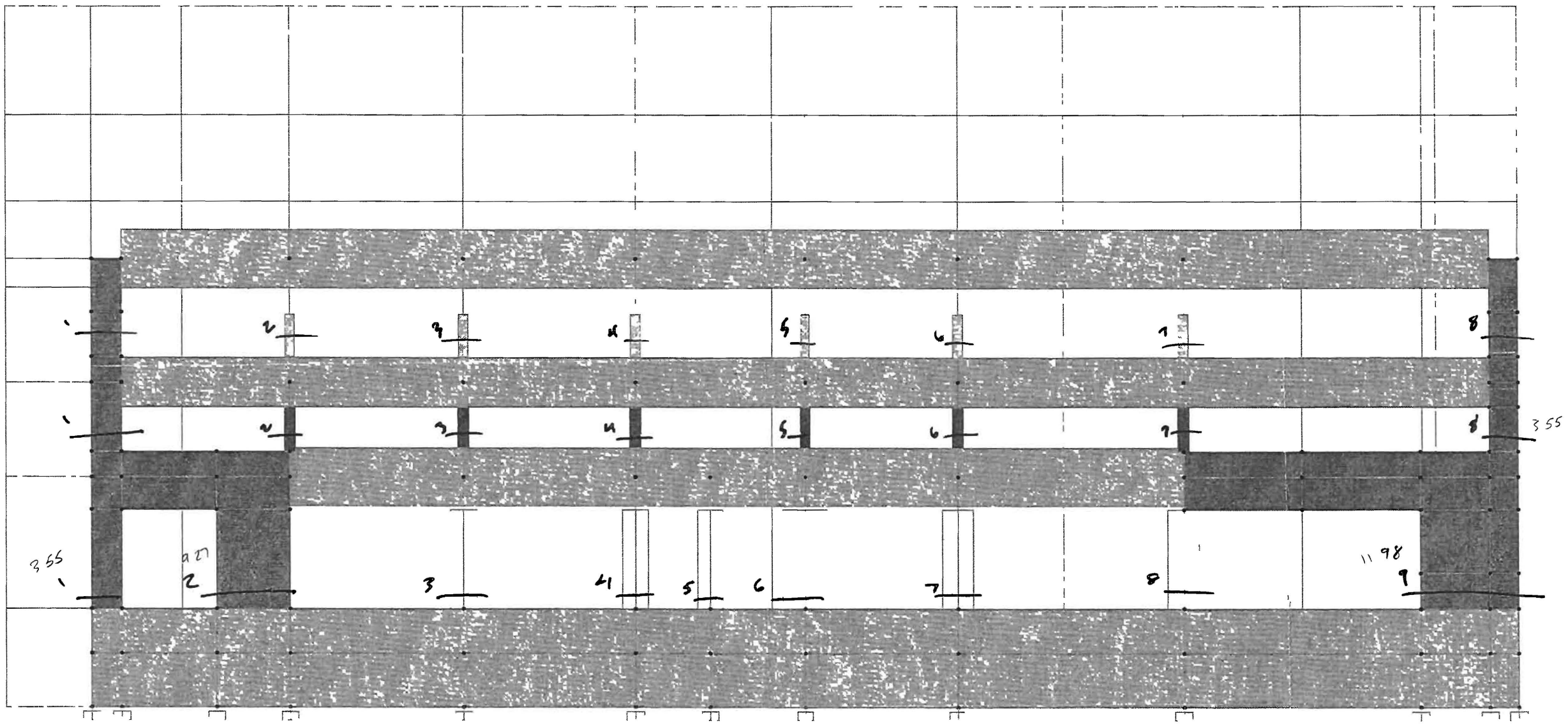

SAP2000 v9 2 0 - File FS1 - X-Z Plane @ Y=0 - Kip, ft, F Units

East Face

SAP2000

5/31/07 15 50 55

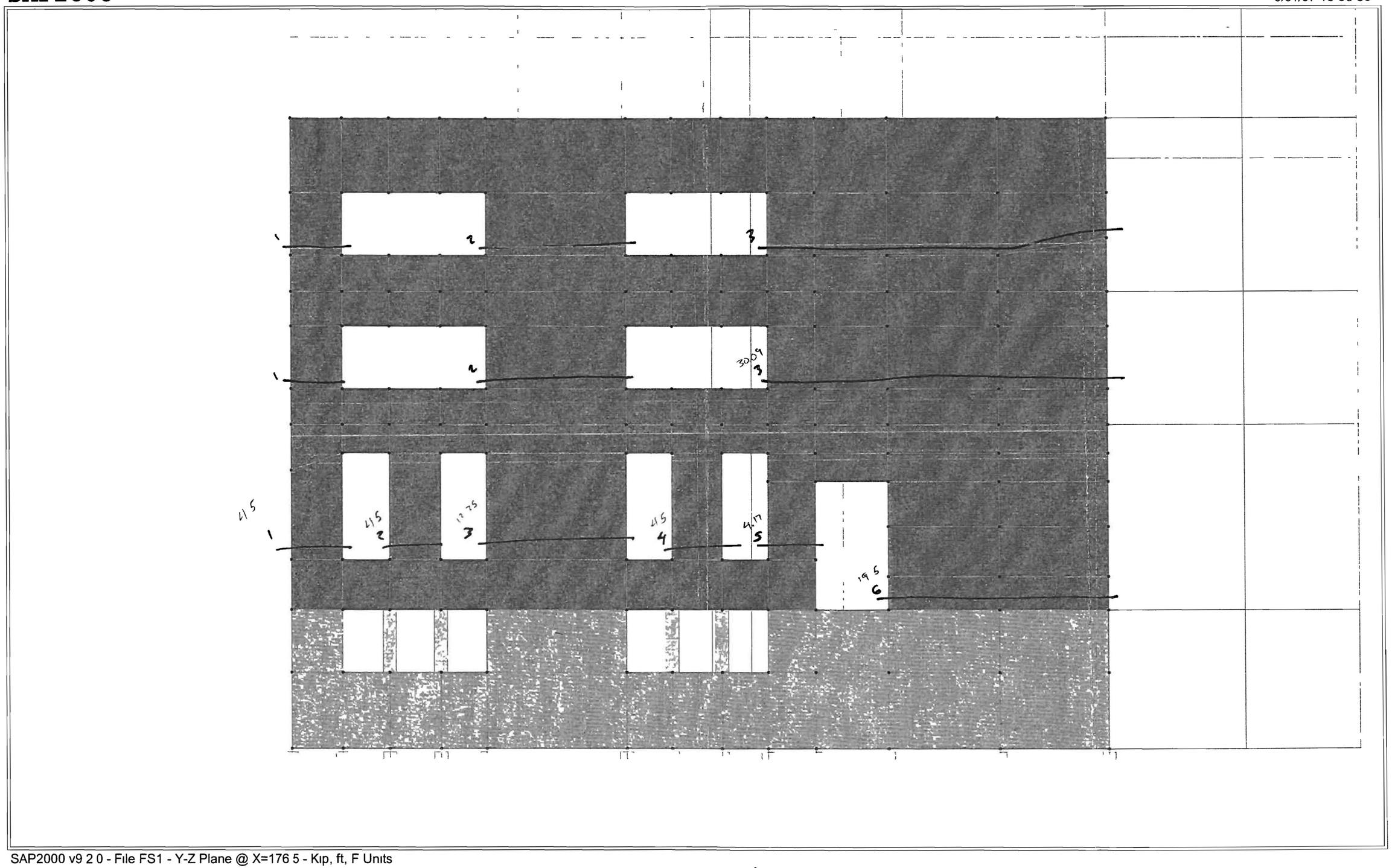

SAP2000 v9 2 0 - File FS1 - Y-Z Plane @ X=176 5 - Kip, ft, F Units

North Face

SAP2000

5/31/07 15 43 53

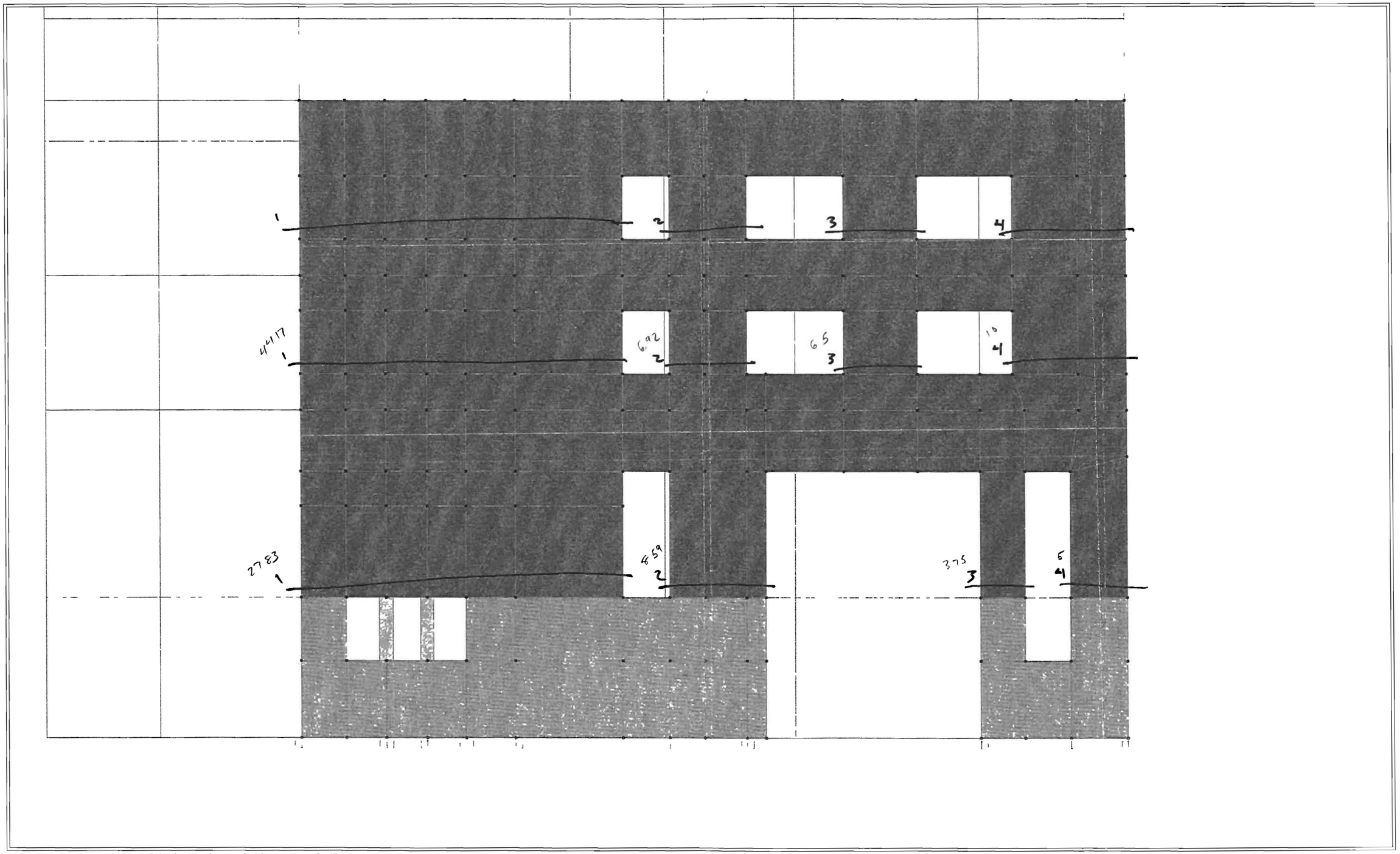

SAP2000 v9 2 0 - File FS1 - Y-Z Plane @ X=0 - Kip, ft, F Units

South Face

SAP2000

5/31/07 15 24 17

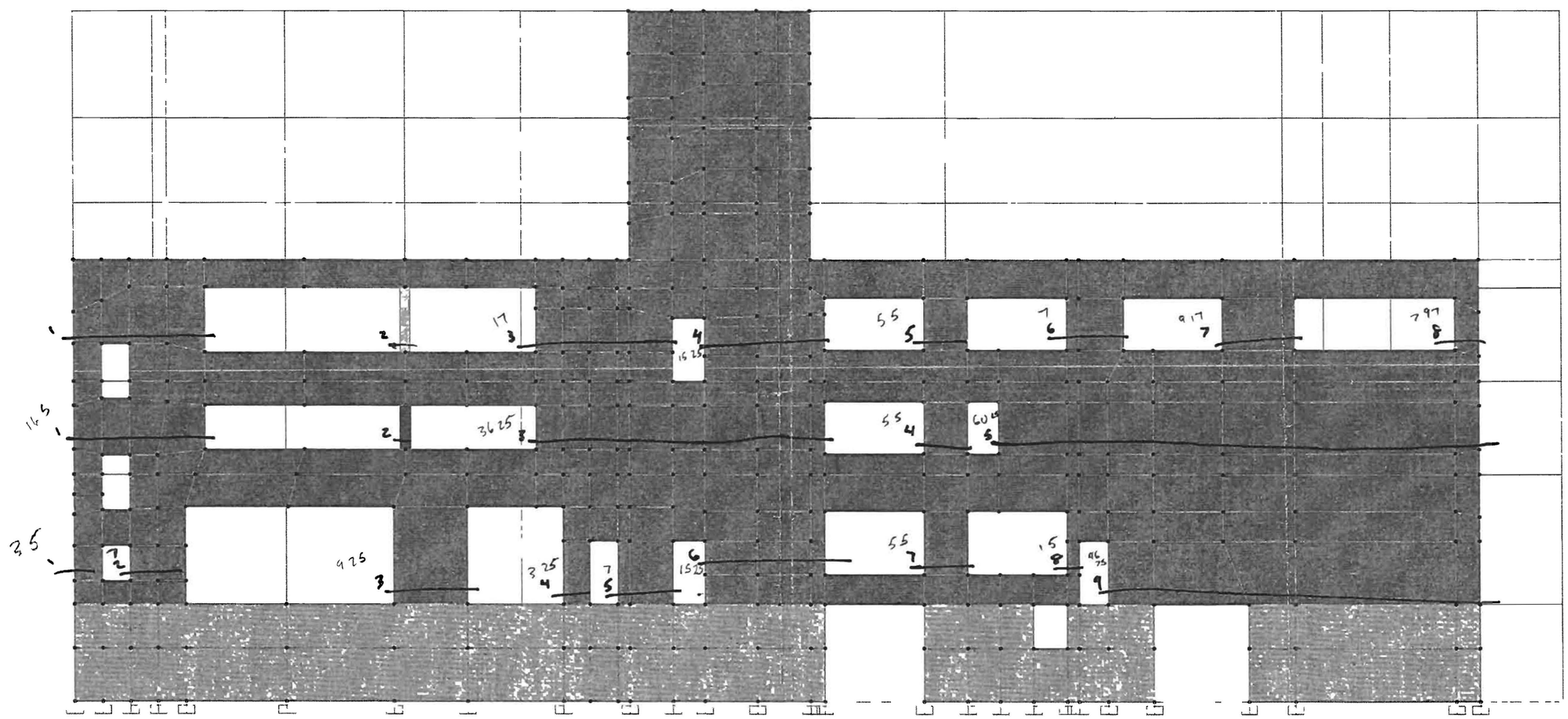

SAP2000 v9 2 0 - File FS1 - X-Z Plane @ Y=72 - Kip, ft, F Units

West Face

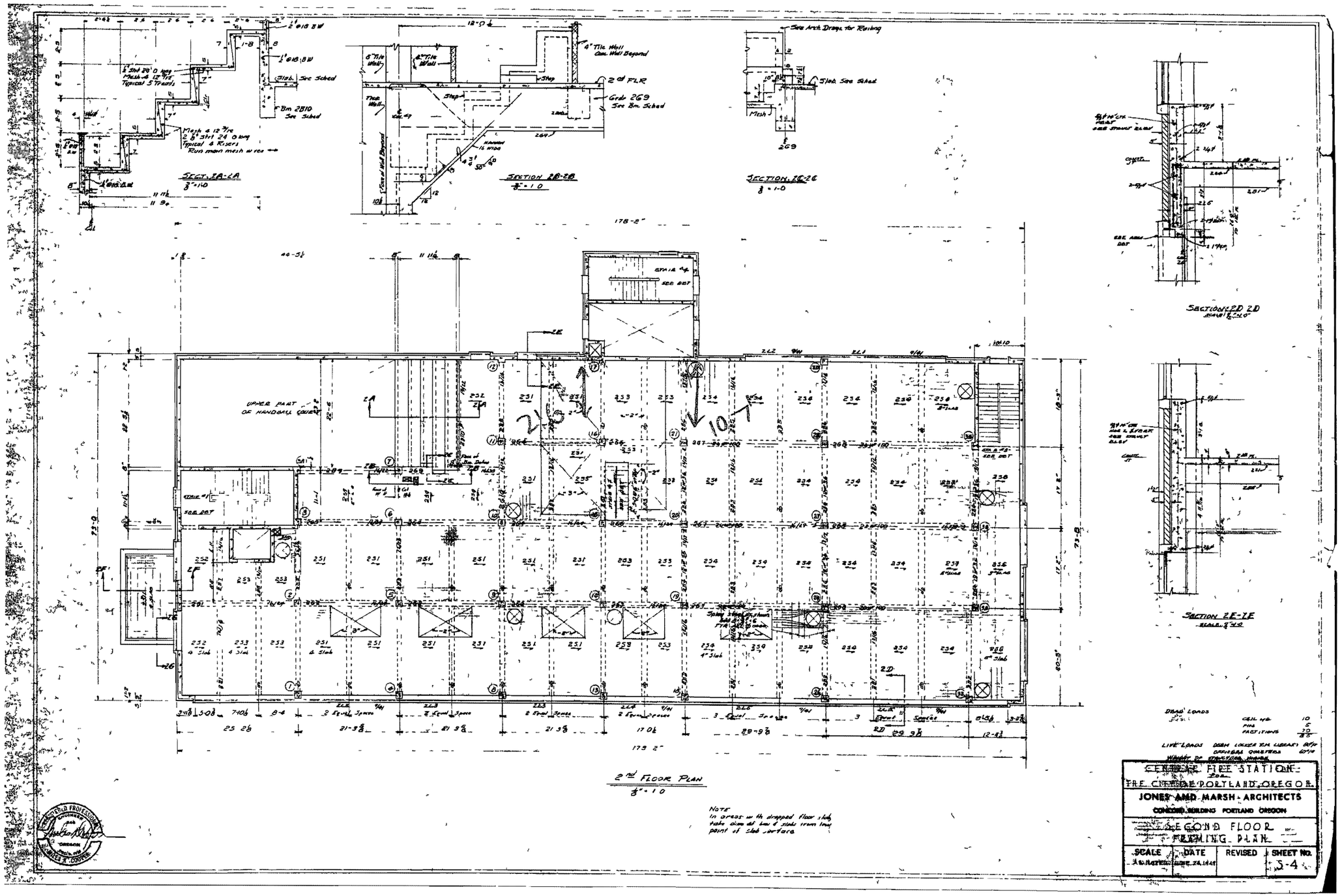
SECT. 1A-1A
SECTION 2B-2B
SECTION 2C-2C
SECTION 2D-2D
SECTION 2E-2E
2nd FLOOR PLAN
UPPER PART OF HANDBALL COURT
NOTE
In areas with dropped floor slab take dim. of bm & slab from top point of slab surface
CENTRAL FIRE STATION
for
THE CITY OF PORTLAND, OREGON
JONES AND MARSH - ARCHITECTS
CONCORD BUILDING PORTLAND OREGON
SECOND FLOOR
FRAMING PLAN
SCALE
DATE
REVISED
SHEET No.
S-4

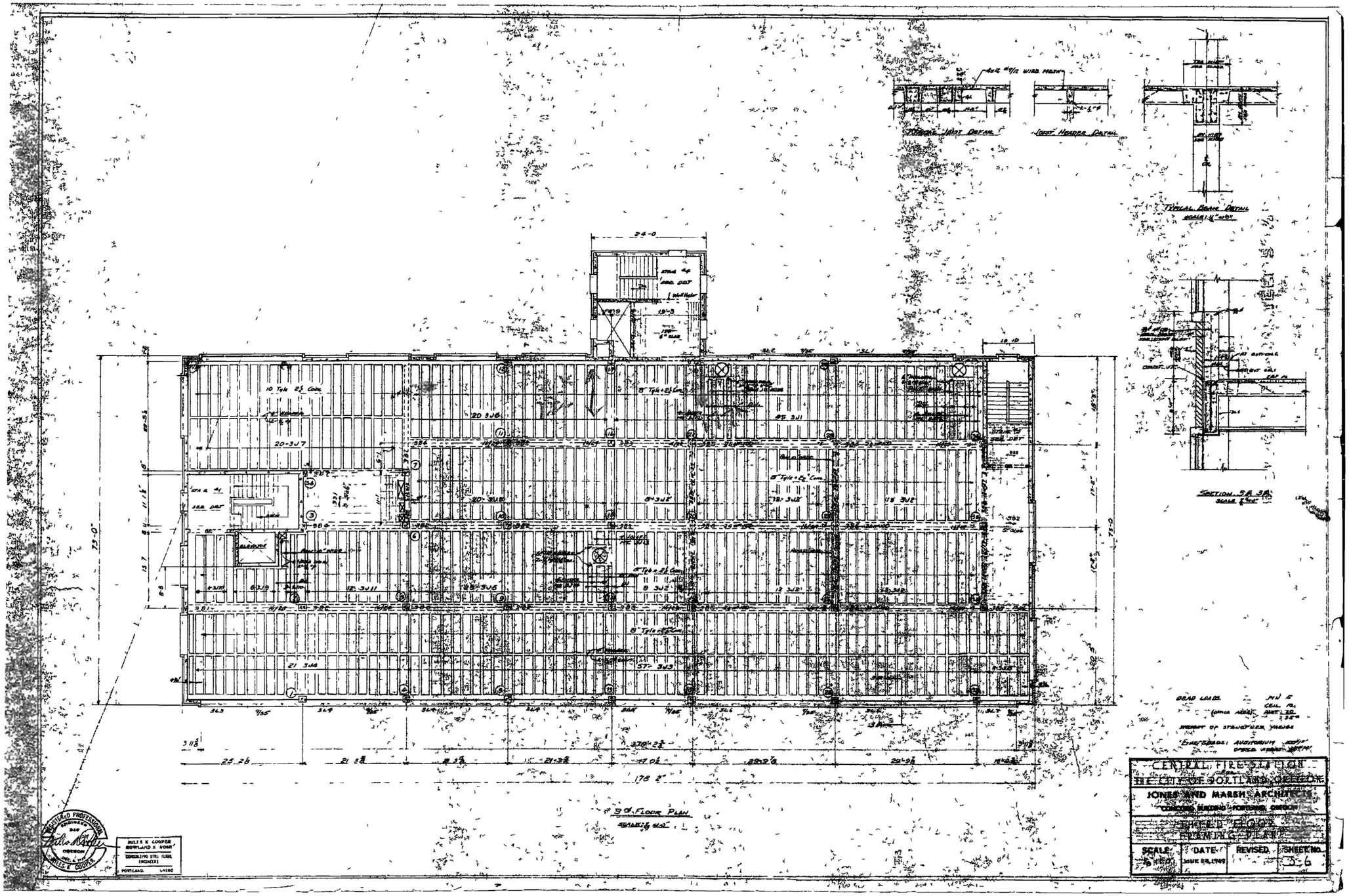
Typical Joist Detail
Joist Header Detail
Typical Beam Detail
Section 3A-3A
3rd. Floor Plan
Dead Loads
Live Loads
Weight of structure varies
Emergency: Auditorium
Office Weight
CENTRAL FIRE STATION
THE CITY OF PORTLAND, OREGON
JONES AND MARSH ARCHITECTS
CONCORD BUILDING PORTLAND, OREGON
THIRD FLOOR
FRAMING PLAN
SCALE
DATE
JUNE 28, 1949
REVISED
SHEET NO.
3-6
REGISTERED PROFESSIONAL ENGINEER
OREGON
MILES K. COOPER
MILES K. COOPER
CONSULTING STRUCTURAL ENGINEER
PORTLAND, OREGON

Pre-Hosting (Check)

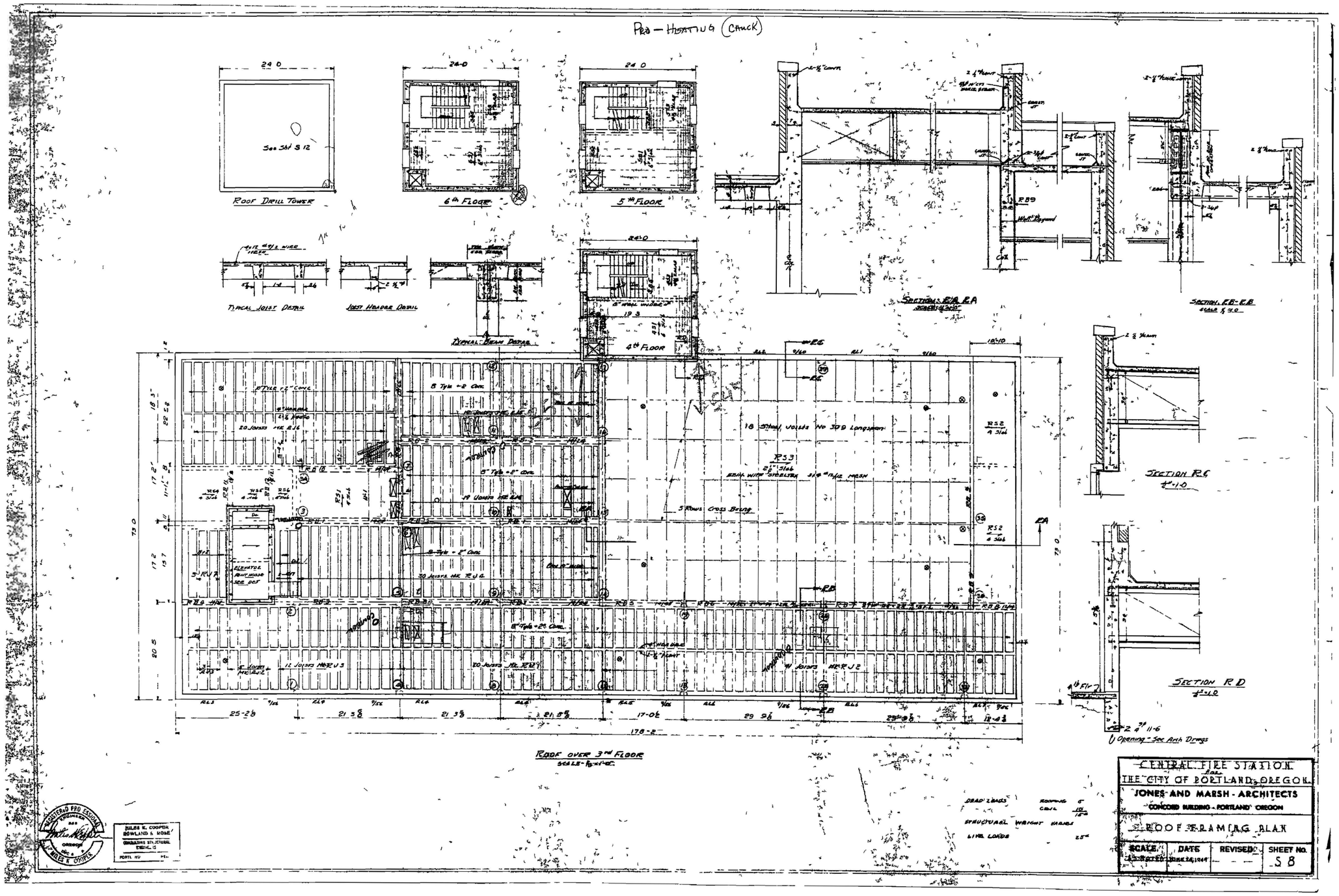

Degenkolb

Subject Wall Flexure		Job Number A7437007	Date 6/15/07
Job Fire Station 1		By DAL	Section
		Checked By	Page of

Walls have minimal flexural reinf

$\rho = 0.25\%$

Determine m factor (ignore wall axial load)

$a = \frac{(0.0025)(4125\ ksi)}{3\ ksi} = 0.035 << 0.1$

Max allowable axial load to maintain $m = 2.0$

$0.1 \geq \frac{A_s f_y + P}{A_w f'_c}$

$0.1 \geq 0.035 + \frac{P}{A_w f'_c} \Rightarrow P \leq 0.065\ A_w f'_c$

$\therefore P \leq 21\ kif$

ok by inspection

$\therefore m = 2.0$

Degenkolb

Subject Wall 1E1 Flexure		Job Number A7437007	Date 6/20/07
Job Fire Station 1		By DAL	Section
		Checked By	Page of

Wall 1E1 @ 1st Flr

Consider South side of Wall in Compression

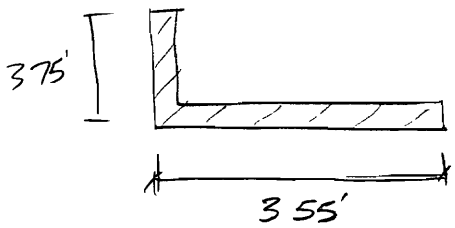

Use $\frac{45'}{12} = 3.75'$ of ⊥ wall

→ Weight @ middle of Wall

Wall = (150)(3.55)(45) = 24k

→ Weight @ North Side

Wall = (150)(6)(7) + (150)(11)(7) × 2 = 29.4k
Flrs = (0.9)(127 + 55 + 93)(10)(10) = 24.7k } 54.1k

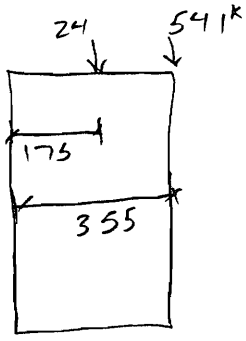

Center of effort = $\frac{(24)(1.75) + (54.1)(3.55)}{78.1} = 3'$

Resultant Moment Capacity = 400k

Degenkolb

Subject. Wall IEI Flexure	Job Number A7437007	Date 6/20/07	
Job Fire Station 1	By DAZ	Section	
	Checked By	Page	of

Consider Compression @ North End of Wall

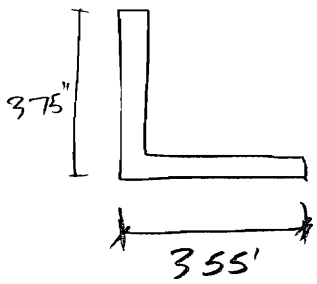

→ Weight @ Middle of Wall
= 24k

→ Weight @ South Side
Wall on South Side = (150)(5' + 4/2)(45') = 47.3k

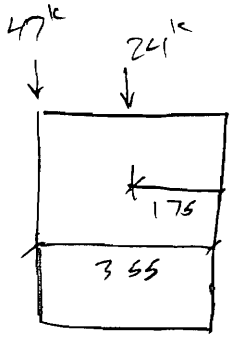

Center of effort = $\frac{(24)(1.75) + (47)(3.55)}{71}$ = 35"

Resultant Capacity = 376k < 400k ∴ controls

Degenkolb

Subject Wall 1E2 Flexure	Job Number A7437007	Date 6/20/07	
Job Fire Station 1	By DAL	Section	
	Checked By	Page	of

Consider Wall w/ Compression @ North Side

DL: $(150)(9.3')(20') = 279^k$ @ Center of Wall

Weight of 2nd Flr on South Side of Wall

$(150)(7')(7') = 74^k$

$(0.9)(127)(10')(7+4) = 126^k$

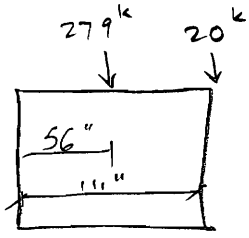

Center of effort $= \frac{(279)(56)+(20)(111)}{479} = 79"$

Resultant Capacity $= 987^k$

Wall w/ Compression on South side will have even more capacity b/c even more DL will be @ North side of Wall

Degenkolb

Subject Wall out of Plane loads		Job Number A7437007	Date 6/19/07
Job Fire Station 1		By DAL	Section
		Checked By	Page of

Exterior walls have (1) #5 @ 14" o.c.

$M_n = 45 \text{ kip ft} \left(\frac{12}{14}\right) = 39 \frac{\text{kip ft}}{\text{ft}}$

$M_{cr} = 65^{k'} \left(\frac{12}{14}\right) = 56 \frac{\text{kip ft}}{\text{ft}}$

Walls are clad w/ brick @ 30 psf
↳ assume fixed @ each floor

$\therefore \; M_u = \frac{(0.03)(16')^2}{12} = 0.64 \frac{\text{kip ft}}{\text{ft}}$

Factor of safety against cracking ≈ 9 ok

Degenkolb

Subject: Wall Continuity @ South Side	Job Number A7437007	Date 6/19/07	
Job Fire Station 1	By DAL	Section	
	Checked By	Page	of

Long wall @ South Side of Building
Consider shear transfer into Basement Walls

$V_{UD} = 930^k = 33\,klf$

$V_{ce} = 23\,klf > \frac{33\,klf}{M=2.0} = 16.5\,klf$ ok

Check interface @ 1st Flr and Basement

$V_{UF} = (23\,klf)(27.8') = 640^k$

$V_{ce} = \left[\left[(0.31\,in^2)\left(\frac{12''}{10'}\right) + (0.21\,in^2)\left(\frac{12''}{18'}\right)\right](50\,ksi) + \overbrace{(0.15)(9/12)(46')}^{DL\ of\ Wall}\right]$

$\times (1.4)(13') = 554^k$

However, this equation is Conservative

If we consider alternative Eqn

$\frac{A_{vf} f_y}{A_c} = \frac{(0.51\,in^2)(57.5\,ksi)}{(1.4)(12)} = 160\,psi$ (25% over valid 200ps)

$V_{ce} = [0.8(0.51\,in^2)(50) + (1.4)(12)(.400)](13') = 1140^k$

if $k_1 = 200\,psi$ $V_{ce} = 702^k > V_{UF}$ ok

Degenkolb

Subject 3rd Flr interior Col		Job Number A7437007	Date 6/15/07
Job Fire Station 1		By DAL	Section
		Checked By	Page of

Column Compatibility

3rd Flr Col in Middle of flr $h \approx 11.5' \approx 138'$
14"x14" w/ (4) #5 + 1/4" ø ties @ 12"

Check Flexure vs Shear Strength

$$\frac{2M_p}{h} = \frac{2(33^{k'})}{11.5} = 5.7^k$$

$$V_s = \frac{(0.049 in^2)(33)(12)}{12} = 16^k$$

$$V_c = 2\frac{\sqrt{3000}}{1000}(12)(14) = 15^k$$

Concrete Can only Carry sheer w/ minimal ductility

check ductility Demand

$\Delta_{story} = 0.07''$

$\varepsilon_y = \frac{41.25}{29000} = 0.0014''/in$

$\phi_y = 1.59 \times 10^{-4}$ rad/in from Moment Curvature

$\delta_y = \frac{(1.59\times10^{-4})(69'')^2}{3} = 0.25$

$\hookrightarrow \Delta_y = 2(0.25') = 0.5'' >> 0.07''$ ok

∴ Interior Columns not even close to yielding and Concrete Can take sheer in Column

However, wrap Col anyway

$f_y = 4125$ ksi
$f'_c = 3$ ksi

MOMENT - CURVATURE ANALYSIS

Project	
Engineer	
Design code	ACI 318-95
Compression face	North
Time of analysis	6/15/2007 10 51 11 AM

Axial Load, Pn=0 0 Kips

Max Concrete Strain	Dist c (in)	Curvature Ø*10-6 (1/in)	Moment Mn (ft*Kips)	Max Steel Strain
0 00025	3 2	79 2	16 2	-0 00070
0 00026	3 2	83 7	17 0	-0 00074
0 00028	3 1	88 2	17 8	-0 00078
0 00029	3 2	91 8	18 9	-0 00081
0 00030	3 2	96 4	19 7	-0 00085
0 00032	3 2	101 0	20 4	-0 00089
0 00033	3 2	104 5	21 5	-0 00092
0 00035	3 2	109 2	22 2	-0 00096
0 00036	3 2	113 8	23 0	-0 00101
0 00037	3 2	117 3	24 0	-0 00103
0 00039	3 2	122 0	24 8	-0 00108
0 00040	3 2	126 7	25 4	-0 00112
0 00041	3 2	130 1	26 5	-0 00115
0 00043	3 2	134 9	27 2	-0 00119
0 00044	3 2	138 9	28 1	-0 00122
0 00046	3 2	143 0	28 9	-0 00126
0 00047	3 2	147 1	29 8	-0 00129
0 00048	3 2	151 1	30 7	-0 00133
0 00050	3 2	156 1	31 3	-0 00138
0 00051	3 2	159 3	32 4	-0 00140
0 00052	3 2	166 2	32 6	-0 00147
0 00054	3 1	173 5	32 8	-0 00154
0 00055	3 1	181 1	32 9	-0 00162
0 00057	3 0	189 0	33 0	-0 00170
0 00058	2 9	197 3	33 1	-0 00179
0 00059	2 9	206 0	33 2	-0 00188
0 00061	2 8	215 2	33 2	-0 00197
0 00062	2 8	224 8	33 0	-0 00208
0 00063	2 7	233 2	33 1	-0 00216
0 00065	2 7	242 0	33 2	-0 00226
0 00066	2 7	249 2	33 5	-0 00233
0 00068	2 6	260 6	33 0	-0 00245
0 00069	2 6	268 3	33 4	-0 00253

RcSection 1.1 - ACI 318-95 15 Jun 2007
14x14.rcs page 1

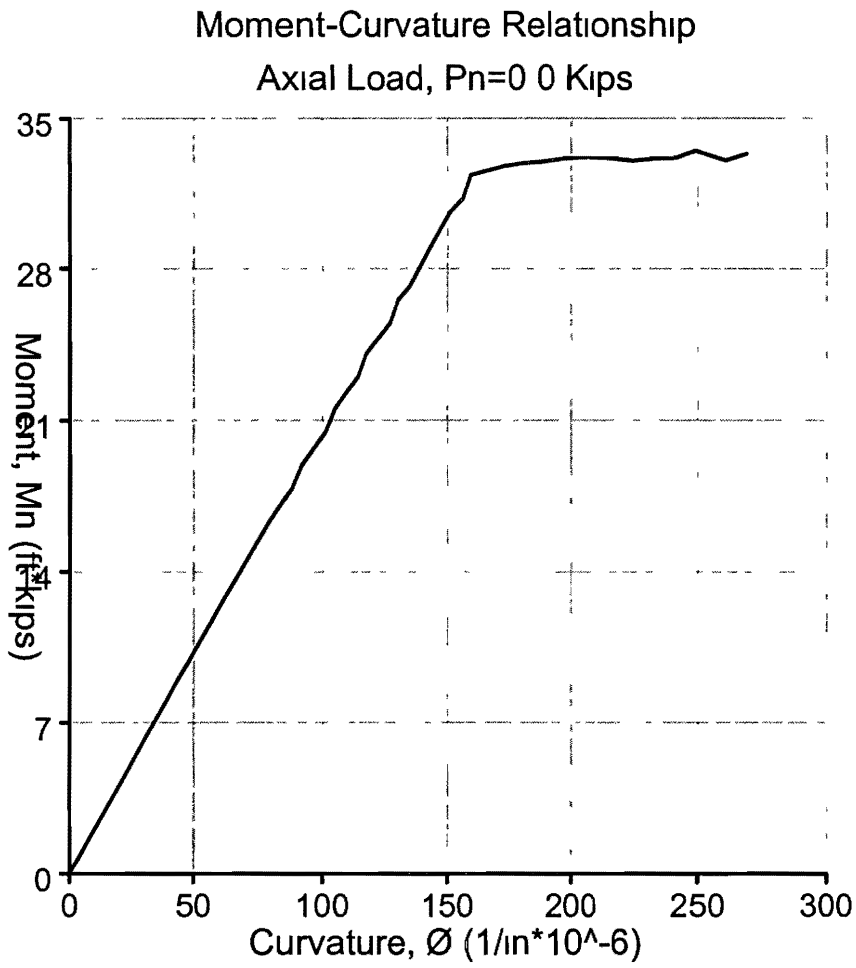

Subject 3rd Flr East Side Col		Job Number A7437007	Date 6/15/07
Job Fire Station 1		By DAL	Section
		Checked By	Page of

3rd Flr Cols @ East Side of Bldg

All cols are 14"x14" w/ (4) #5 and 1/4"Ø ties @ 12"

From Analysis Model. Worst Col

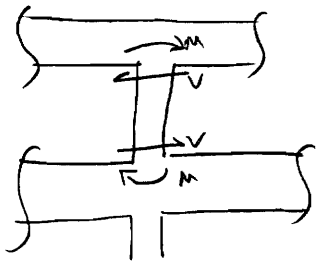

$M_u = 492$ kip ft

$V = 19^k$

$\frac{2M}{h} = \frac{2(492)}{5.2'} = 189^k$ ✓

$V_c = \frac{2\sqrt{3000}}{1000}(12)(14) = 15^k$

$V_s = \frac{(0.049 in^2)(33 ksi)(12")}{12"} = 16^k$

$Q_{CE} = 16.6^k < 19^k$ N.G. Column Shear Controled!

Max axial load $\sim 50^k$

$\frac{50^k}{(14)(14)(3 ksi)} = 0.085 < 0.1 \Rightarrow M = 15$ (Non-ductile) Classification

$DCR = \frac{492}{33(15)} = 0.99 \approx 1.0$

Shear Walls will pick up load after Col yields. This DCR is conservative.

∴ Strengthen Col w/ FRP wrap to increase shear capacity to ensure flexure controled response

↳ or infill w/ conc. to reduce demand on (E) col

Degenkolb

Subject 3rd Flr Col on West side		Job Number A7437007	Date 6/20/07
Job Fire Station 1		By DAL	Section
		Checked By	Page of

$M_u = 23$ kip ft

$V_u = \frac{2(23)}{8} = 5.8^k$

$V_{CN} = 17^k > V_u$ ok

$M_{CE} = 33^{k'}$

↳ $V_u = \frac{2(33)}{8} = 8.3^k$ @ flexure mechanism

$V_u < V_{CE}$. Flexure Controls ok

No strengthening Req'd

↳ However, wrap col anyway

Subject 2nd Flr Interior Col		Job Number A74137007	Date 6/15/07
Job Fire-Station 1		By DAL	Section
		Checked By	Page of

2nd Flr Col $h \approx 11.5' = 138''$

16"x16" w/ (4) #7 and 1/4"Ø ties @12"

Check Flexure Vs Shear Strength

$$\frac{2M_p}{h} = \frac{2(53)}{11.5} = 9.2^k$$

$$V_c = 2\sqrt{\frac{2000}{1000}}\,(14)(16) = 20^k$$

$$V_s = \frac{(0.049)(33)(14)}{12} = 1.9^k$$

} 21.9k if Concrete can take Shear

$\Delta_{story} = 0.054''$

$\varepsilon_{sy} = 0.00141''/in$

$\phi_y = 1.36\times10^{-4}$ rad/in from moment curvature

$$\delta_y = \frac{(1.36\times10^{-4})(69'')^2}{3} = 0.21''$$

$\Delta_y = 0.412'' > 0.054''$ ok

∴ Column is flexure controled and can take interstory drift elasticly

↳ However, wrap anyway

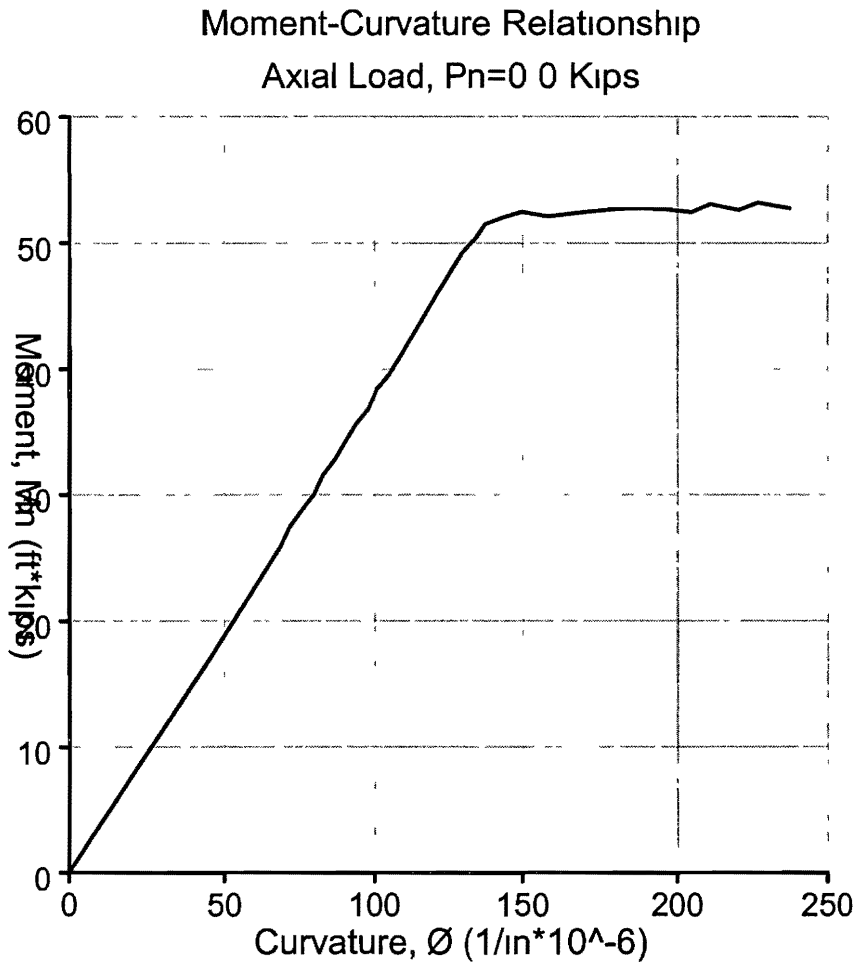
Moment-Curvature Relationship
Axial Load, Pn=0 0 Kips
Moment, Mn (ft*kips)
Curvature, Ø (1/in*10^-6)
0
10
20
30
40
50
60
0
50
100
150
200
250

MOMENT - CURVATURE ANALYSIS

Project
Engineer
Design code ACI 318-95
Compression face North
Time of analysis 6/15/2007 1 13 53 PM

Axial Load, Pn=0 0 Kips

Max Concrete Strain	Dist c (in)	Curvature Ø*10-6 (1/in)	Moment Mn (ft*Kips)	Max Steel Strain
0 00025	3 6	68 5	25 8	-0 00071
0 00026	3 7	71 7	27 4	-0 00074
0 00028	3 7	75 7	28 7	-0 00078
0 00029	3 7	79 6	30 0	-0 00082
0 00030	3 7	82 8	31 6	-0 00085
0 00032	3 7	86 8	32 8	-0 00090
0 00033	3 7	90 4	34 2	-0 00093
0 00035	3 7	93 9	35 6	-0 00097
0 00036	3 7	98 0	36 8	-0 00101
0 00037	3 7	101 0	38 5	-0 00104
0 00039	3 7	105 1	39 6	-0 00108
0 00040	3 7	108 6	41 0	-0 00112
0 00041	3 7	112 2	42 4	-0 00116
0 00043	3 7	115 7	43 8	-0 00119
0 00044	3 7	119 3	45 1	-0 00123
0 00046	3 7	122 8	46 5	-0 00126
0 00047	3 7	126 4	47 8	-0 00130
0 00048	3 7	129 9	49 2	-0 00133
0 00050	3 7	134 2	50 2	-0 00138
0 00051	3 7	137 8	51 5	-0 00142
0 00052	3 7	143 7	52 1	-0 00149
0 00054	3 6	150 0	52 5	-0 00156
0 00055	3 5	158 3	52 2	-0 00166
0 00057	3 4	165 2	52 4	-0 00175
0 00058	3 4	172 4	52 6	-0 00183
0 00059	3 3	180 0	52 8	-0 00193
0 00061	3 2	187 9	52 8	-0 00202
0 00062	3 2	196 2	52 7	-0 00213
0 00063	3 1	204 9	52 5	-0 00223
0 00065	3 1	211 0	53 1	-0 00231
0 00066	3 0	220 5	52 7	-0 00242
0 00068	3 0	227 0	53 2	-0 00250
0 00069	2 9	237 3	52 8	-0 00263

Subject 2nd Flr East Side Cols		Job Number A7437007	Date 6/15/07
Job Fire Station 1		By DAL	Section
		Checked By	Page of

$M_{max} = 45.8^k$, $V_{max} = 16.7^k$ } From Model $M_{max} > M_n = 39^{k'}$

$2\left(\frac{53}{15.5}\right) = 19.3^k$

$V_c = 20^k$, $V_s = 1.9^k$ } $Q_{CE} = 21.9^k > 19.3^k$ ok

Col Flex Controls

Max axial load ~ 100^k

$\frac{100^k}{(16)(16)(3ksi)} = 0.13$

Insufficient ties => Nonductile Col => $\mu = 1.5$

$DCR = \frac{45.8}{(39)(1.5)} = 0.8 < 1.0$ ok

∴ Column will hinge, but amount ok

↳ wrap col anyway

Degenkolb

Subject 2nd Flr West Side Col		Job Number A7437007	Date 6/26/07
Job Fire Station 1		By DAL	Section
		Checked By	Page of

$M_u = 27^{k'}$
$V_u = 9.2^k$

$V_{CN} - 21.9^k > V_u$ ok

$M_{CE} = 53^{k'}$
↳ $V_u = \frac{2(53)}{5.4} = 19.6^k < V_{CN}$

∴ Col Flex Controled
No strengthening Req'd

↳ wrap col anyway

Degenkolb

Subject 1st Flr Interior Col		Job Number A7437007	Date 6/15/07
Job Fire Station 1		By DAL	Section
		Checked By	Page of

$h \approx 16' = 192''$

16x16 Col w/ 8 #8 and #3 spiral @ 2 3/4 pitch

$\frac{2M}{h} = \frac{2(126)}{16} = 15.8^k$

$V_c = 20^k$

$V_s = \frac{(0.11)(33)(14'')}{2.75} = 18.5^k > 15.8$ ok!

Column Flexure Controled and Steel alone can take Shear

$\Delta_{story} \approx 0.005' = 0.064''$

ok by observation

↳ wrap col anyway

MOMENT - CURVATURE ANALYSIS

Project
Engineer
Design code ACI 318-95
Compression face North
Time of analysis 6/15/2007 3 09 16 PM

Axial Load, Pn=0 0 Kips

Max Concrete Strain	Dist c (in)	Curvature Ø*10-6 (1/in)	Moment Mn (ft*Kips)	Max Steel Strain
0 00025	5 0	50 5	29 0	-0 00046
0 00026	5 0	53 3	30 5	-0 00048
0 00028	5 0	56 1	32 0	-0 00051
0 00029	4 9	58 8	33 5	-0 00053
0 00030	4 9	61 6	34 9	-0 00056
0 00032	5 0	64 2	36 7	-0 00058
0 00033	5 0	67 0	38 1	-0 00061
0 00035	5 0	69 8	39 5	-0 00063
0 00036	5 0	72 3	41 2	-0 00065
0 00037	5 0	75 2	42 6	-0 00068
0 00039	5 0	77 7	44 4	-0 00070
0 00040	5 0	80 5	45 7	-0 00073
0 00041	5 0	83 4	47 0	-0 00075
0 00043	5 0	85 9	48 7	-0 00077
0 00044	5 0	88 7	50 0	-0 00080
0 00046	5 0	91 2	51 7	-0 00082
0 00047	5 0	94 1	53 0	-0 00085
0 00048	5 0	96 6	54 7	-0 00087
0 00050	5 0	99 3	56 1	-0 00089
0 00051	5 0	102 0	57 5	-0 00092
0 00052	5 0	104 8	59 0	-0 00094
0 00054	5 0	107 5	60 4	-0 00097
0 00055	5 0	110 0	62 0	-0 00099
0 00057	5 0	112 7	63 4	-0 00101
0 00058	5 0	115 4	64 7	-0 00104
0 00059	5 0	117 9	66 4	-0 00106
0 00061	5 0	120 7	67 7	-0 00108
0 00062	5 0	123 4	69 0	-0 00111
0 00063	5 0	125 9	70 6	-0 00113
0 00065	5 0	128 7	71 8	-0 00115
0 00066	5 0	131 2	73 4	-0 00117
0 00068	5 0	134 0	74 6	-0 00120
0 00069	5 1	136 5	76 2	-0 00122
0 00070	5 1	139 0	77 8	-0 00124
0 00072	5 1	141 8	78 9	-0 00127
0 00073	5 1	144 4	80 4	-0 00129
0 00074	5 1	146 9	82 0	-0 00131
0 00076	5 1	149 7	83 0	-0 00134
0 00077	5 1	152 2	84 5	-0 00136
0 00079	5 1	154 8	86 0	-0 00138
0 00080	5 1	157 3	87 5	-0 00140
0 00081	5 1	160 2	88 5	-0 00143
0 00083	5 1	163 1	89 5	-0 00146
0 00084	5 1	165 9	90 8	-0 00148
0 00085	5 1	168 6	92 0	-0 00151
0 00087	5 1	171 6	93 0	-0 00153

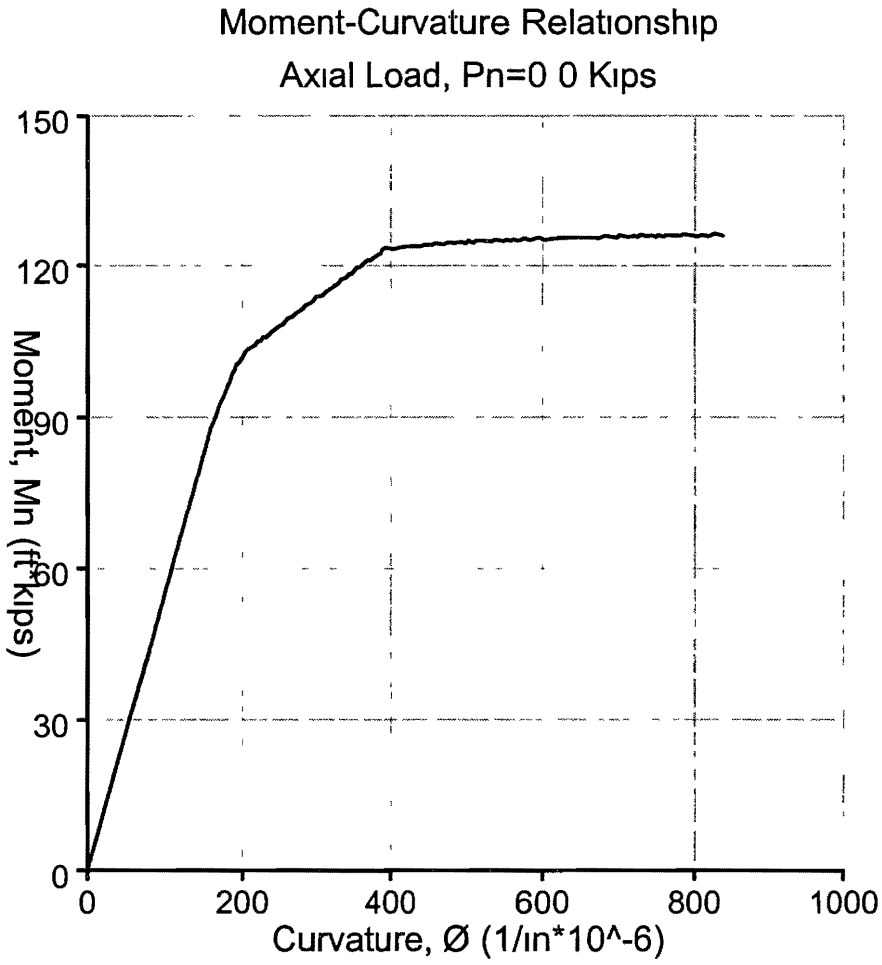
Moment-Curvature Relationship
Axial Load, Pn=0 0 Kips
150
120
90
60
30
0
Moment, Mn (ft*kips)
0
200
400
600
800
1000
Curvature, Ø (1/in*10^-6)

Subject 1st Flr Interior Col		Job Number A7437007	Date 6/15/07
Job Fire Station 1		By DAL	Section
		Checked By	Page of

16x16 Col w/ (6) #8 and 1/4" ø ties @ 12"

$\frac{2M}{h} = \frac{2(105)}{16} = 13.1^k$

$V_C = 20^k$

$V_S = \frac{(0.0049)(33)(14)}{12} = 1.9^k$

$\Big\}\ Q_{CE} = 21.9^k$

$\Delta_{story} \approx 0.064''$

$\varepsilon_{sy} = 0.0014\ in/in$

$\phi_y = 150 \times 10^{-6}$ rad/in from moment curvature

$\delta_y = \frac{(1.5 \times 10^{-4})(96'')^2}{3} = 0.46''$

$\Delta_y = 0.92'' >> 0.064''$ Demand ok

MOMENT - CURVATURE ANALYSIS

Project
Engineer
Design code ACI 318-95
Compression face North
Time of analysis 6/15/2007 2 40 16 PM

Axial Load, Pn=0 0 Kips

Max Concrete Strain	Dist c (in)	Curvature Ø*10-6 (1/in)	Moment Mn (ft*Kips)	Max Steel Strain
0 00025	4 6	54 5	36 0	-0 00051
0 00026	4 6	57 5	37 9	-0 00054
0 00028	4 6	60 3	40 0	-0 00057
0 00029	4 6	63 1	42 0	-0 00059
0 00030	4 6	66 1	43 9	-0 00062
0 00032	4 6	69 2	45 7	-0 00065
0 00033	4 6	71 9	47 8	-0 00067
0 00035	4 6	75 0	49 6	-0 00070
0 00036	4 6	77 7	51 6	-0 00073
0 00037	4 6	80 8	53 4	-0 00076
0 00039	4 6	83 5	55 4	-0 00078
0 00040	4 6	86 6	57 2	-0 00081
0 00041	4 6	89 4	59 2	-0 00084
0 00043	4 6	92 5	60 9	-0 00087
0 00044	4 6	95 2	62 9	-0 00089
0 00046	4 6	98 4	64 6	-0 00092
0 00047	4 6	101 1	66 6	-0 00095
0 00048	4 7	103 8	68 6	-0 00097
0 00050	4 6	107 0	70 2	-0 00100
0 00051	4 7	109 7	72 2	-0 00102
0 00052	4 7	112 4	74 1	-0 00105
0 00054	4 7	115 4	75 9	-0 00108
0 00055	4 7	118 4	77 6	-0 00111
0 00057	4 7	121 1	79 6	-0 00113
0 00058	4 7	123 8	81 5	-0 00115
0 00059	4 7	126 8	83 2	-0 00118
0 00061	4 7	129 9	84 9	-0 00121
0 00062	4 7	132 6	86 8	-0 00124
0 00063	4 7	135 3	88 7	-0 00126
0 00065	4 7	138 0	90 6	-0 00128
0 00066	4 7	141 1	92 2	-0 00131
0 00068	4 7	143 8	94 0	-0 00134
0 00069	4 7	146 6	95 9	-0 00136
0 00070	4 7	149 3	97 7	-0 00139
0 00072	4 7	152 4	99 3	-0 00142
0 00073	4 6	157 5	99 8	-0 00147
0 00074	4 6	162 7	100 3	-0 00153
0 00076	4 5	168 9	100 3	-0 00161
0 00077	4 4	174 6	100 7	-0 00167
0 00079	4 3	181 4	100 4	-0 00175
0 00080	4 3	186 5	101 0	-0 00181
0 00081	4 2	192 9	101 0	-0 00189
0 00083	4 1	199 5	101 0	-0 00197
0 00084	4 1	205 2	101 5	-0 00203
0 00085	4 0	212 3	101 3	-0 00212
0 00087	4 0	218 4	101 5	-0 00219

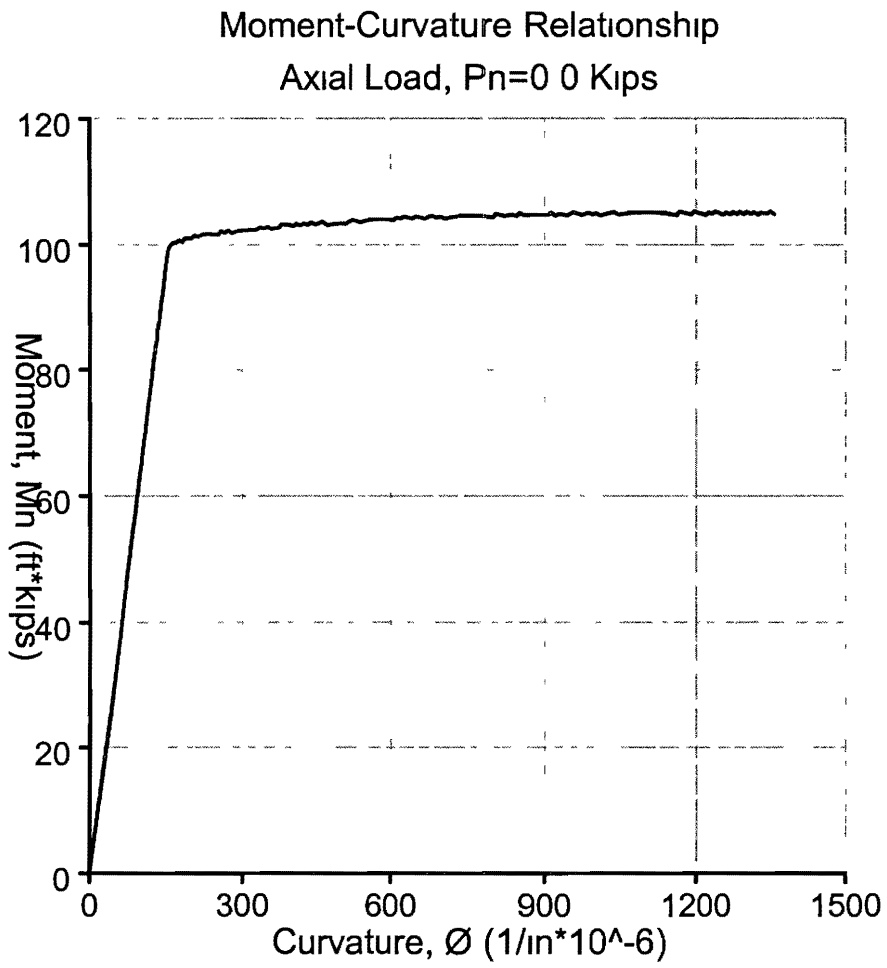
Moment-Curvature Relationship
Axial Load, Pn=0 0 Kips
Moment, Mn (ft*kips)
120
100
80
60
40
20
0
0
300
600
900
1200
1500
Curvature, Ø (1/in*10^-6)

Subject Roof Bm @ East Side		Job Number A7437007	Date 6/15/07
Job Fire Station 1		By DAL	Section
		Checked By	Page of

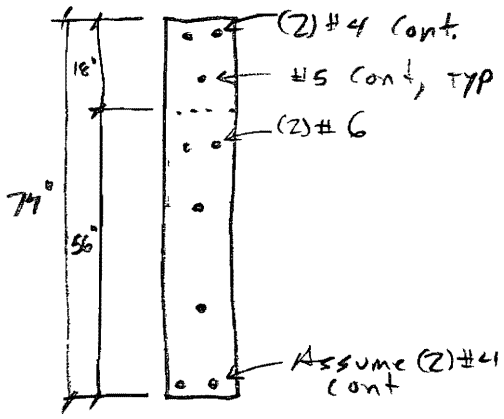

2nd Bay from South End

Bm typ = RL4

Bay $\ell = 255.6''$ ℄ to ℄ of Col

$= 241.6'$ face to face of Col

length of (2) #6 = 254" (straight bars)

↳ development length = 6" each side

$= 8\ d_b$

length of (2) #6 Bent Bars = 376" (horizontally)

development length = 67.5" = $90\ d_b$

Necessary development length to yield bar

$\ell = \frac{(41{,}250)}{25\sqrt{3000}} = 30\ d_b > 8\ d_b$ NG, straight bar can't yield

∴ Only Consider (2) #6

Consider Bm under two loading conditions

1) $M_{seismic} + M_{DL+LL}$ w/ Tension @ top

2) $M_{seismic}$ alone w/ Tension @ bottom

Degenkolb

Subject	Roof Bm @ East Side	Job Number	A74137007
Job	Fire Station 1	By	DAL
		Checked By	
Date	6/18/07	Section	
Page	of		

Consider Roof Bm w/ tension @ Bottom
* Ignore DL/LL Demand from Moment

$\therefore M_u = 129^{k'}$ from analysis

$M_{cr} = 281^{k'} > M_u$ ok

Note Bm doesn't have enough reinforcement to take Cracking Moment

ANALYSIS SUMMARY

Project
Engineer
Design code ACI 318-95
Compression face North
Time of analysis 6/18/2007 12 02 21 PM

Tension @ Bottom

Nominal Moment Resistance, Mn (North-South)

Total area	4 625 ft^2
Centroid from origin (0,0)	37 00 in
Moment of inertia, Ix	303918 0 in^4
Capacity reduction factor, Ø	1 00
Nominal axial load resistance, Pn (Mn=0)	1799 3 Kips
Nominal moment resistance, Mn (Punf=0 0 Kips)	260 8 Kips*ft
Cracking moment, Mcr	281 2 Kips*ft
Distance to N A , c	3 71 in

Subject Roof Bm @ East Side		Job Number A7437007	Date 6/18/07
Job Fire Station 1		By DAL	Section
		Checked By	Page of

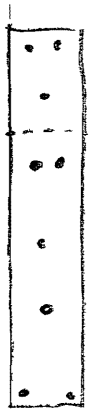

Consider Bm w/ Tension @ top

Demand

$M_{seismic} = 129^{k'}$

$w_{DL+LL} = 1'(70psf)(10') = 0.77\ klf$

$M_{DL} = \frac{(0.77)(21')^2}{12} = 28^{k'}$

$\therefore M_u = 157^{k'}$

Capacity

$M_{cr} = 281^{k'} > M_u$ ok

$V_u = \frac{2(129)}{21'} + \frac{(0.77)(21)}{2} = 20^k$

$V_c = \frac{2\sqrt{2000}(9)(74)}{1000} = 59^k > V_u$ ok

ANALYSIS SUMMARY

Project
Engineer
Design code ACI 318-95
Compression face South
Time of analysis 6/18/2007 12 02 31 PM

Nominal Moment Resistance, Mn (South-North) Tension @ Top

Total area	4 625 ft^2
Centroid from origin (0,0)	37 00 in
Moment of inertia, Ix	303918 0 in^4
Capacity reduction factor, Ø	1 00
Nominal axial load resistance, Pn (Mn=0)	1799 3 Kips
Nominal moment resistance, Mn (Punf=0 0 Kips)	374 8 Kips*ft
Cracking moment, Mcr	281 2 Kips*ft
Distance to N A , c	3 71 in

Subject 3rd Flr Bm @ East Side		Job Number A7437007	Date 6/18/07
Job Fire Station 1		By DAL	Section
		Checked By	Page of

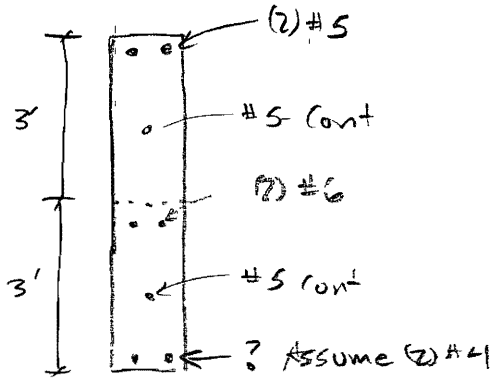

Consider 2nd bay from South end

Developement length same as
Roof = 8 d_b for straight bars
90 d_b for bent bars

Consider Bm w/ tension @ bottom
→ ignore help from DL/LL Moment

$M_u = 112^{k'}$ from Analysis

$M_n = 284^{k'} > M_u$ ok

Consider Bm w/ tension @ top

$W_{DL+LL} = [1.1(0.11\ ksf) + 0.25(50psf)]10 = 13\ klf$

$M_{DL+LL} = \frac{(13klf)(21')^2}{12} = 48^{k'}$

$\therefore M_u = 160\ k'$

$M_n = 262^{k'} > M_u$ ok

$V_u = \frac{2(112)}{21} + \frac{(13)(21)}{2} = 24^k$

$V_c = 2\sqrt{2000}(9)(12") = 58^k > V_u$ ok

ANALYSIS SUMMARY

Project	
Engineer	
Design code	ACI 318-95
Compression face	North
Time of analysis	6/18/2007 1 44 03 PM

Nominal Moment Resistance, Mn (North-South)

Total area	4 500 ft^2
Centroid from origin (0,0)	36 00 in
Moment of inertia, Ix	279936 0 in^4
Capacity reduction factor, Ø	1 00
Nominal axial load resistance, Pn (Mn=0)	1741 4 Kips
Nominal moment resistance, Mn (Punf=0 0 Kips)	284 1 Kips*ft
Cracking moment, Mcr	266 2 Kips*ft
Distance to N A , c	3 21 in

ANALYSIS SUMMARY

Project	
Engineer	
Design code	ACI 318-95
Compression face	South
Time of analysis	6/18/2007 1 53 59 PM

Nominal Moment Resistance, Mn (South-North)

Total area	4 500 ft^2
Centroid from origin (0,0)	36 00 in
Moment of inertia, Ix	279936 0 in^4
Capacity reduction factor, Ø	1 00
Nominal axial load resistance, Pn (Mn=0)	1741 4 Kips
Nominal moment resistance, Mn (Punf=0 0 Kips)	262 2 Kips*ft
Cracking moment, Mcr	266 2 Kips*ft
Distance to N A , c	3 21 in

Subject 2nd Flr Bm @ East Side		Job Number A7437007	Date 6/18/07
Job Fire Station 1		By DAL	Section
		Checked By	Page of

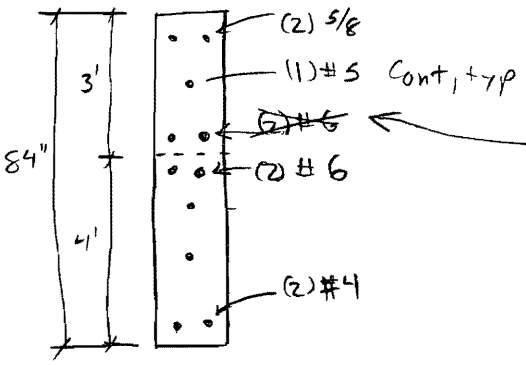

Consider 4th Bay from South end. 2L3

$M_u = 230^{k'}$

Developement length of (2)#6 = $\frac{21'3'' - 16'' - 21'2''}{2}$ = $10 d_b$ N.G.

Consider Bm w/ tension @ bottom

* ignore DL/LL Moment (conservative)

$M_n = 359^{k'} > M_u$ ok

Consider Bm w/ tension @ top

$w_{DL+LL} = [1.1(0.11ksf) + 0.25(50psf)]\ 10' = 1.3\ klf$

$M_{DL+LL} = \frac{(1.3klf)(21')^2}{12} = 48^{k'}$

$M_u = 278^{k'}$

$M_n = 425^{k'} > M_u$ ok

$V_u = \frac{2(230)}{21} + \frac{(1.3)(21)}{2} = 35^k$

$V_c = \frac{2\sqrt{2000}}{1000}(9)(84) = 68^k > V_u$ ok

ANALYSIS SUMMARY

Project
Engineer
Design code ACI 318-95
Compression face North
Time of analysis 6/18/2007 2 57 30 PM

Nominal Moment Resistance, Mn (North-South) Tension on bottom

Total area	5 250 ft^2
Centroid from origin (0,0)	42 00 in
Moment of inertia, Ix	444528 0 in^4
Capacity reduction factor, Ø	1 00
Nominal axial load resistance, Pn (Mn=0)	2037 3 Kips
Nominal moment resistance, Mn (Punf=0 0 Kips)	359 3 Kips*ft
Cracking moment, Mcr	362 3 Kips*ft
Distance to N A , c	3 42 in

ANALYSIS SUMMARY

Project
Engineer
Design code ACI 318-95
Compression face South
Time of analysis 6/18/2007 2 58 50 PM

Nominal Moment Resistance, Mn (South-North) Tension on top

Total area	5 250 ft^2
Centroid from origin (0,0)	42 00 in
Moment of inertia, Ix	444528 0 in^4
Capacity reduction factor, Ø	1 00
Nominal axial load resistance, Pn (Mn=0)	2037 3 Kips
Nominal moment resistance, Mn (Punf=0 0 Kips)	425 1 Kips*ft
Cracking moment, Mcr	362 3 Kips*ft
Distance to N A , c	4 12 in

Degenkolb

Subject	1st Flr East Side Cols/Walls	Job Number	A74137007
Job	Fire Station 1	By	DAL
		Checked By	

Date	6/18/07
Section	
Page	of

See Results

Degenkolb

Subject	East Side lintel Bms	Job Number	A7437007
Job	Fire Station 1	By	DAL
		Checked By	
Date	6/20/07	Section	
Page	of		

Consider Bms @ 2nd, 3rd, Roof levels on ~~East~~ Side compare capacity of Bms to capacity of cols

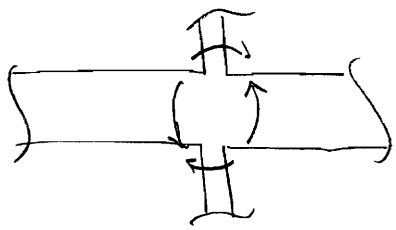

$\Sigma M_{col} \approx 33 + 53 = 86^{k'}$

$\Sigma M_{Bm} \approx 500^{k'} >> \Sigma M_{col}$

∴ The cols are much weaker than the Bms, and will yield far before Bms crack

Degenkolb

Subject. Collector to interior Wall		Job Number A7437007	Date 9/24/07
Job Fire Station 1		By DAL	Section
		Checked By	Page of

Shear wall "i3"

Shear wall has exercise court @ one side and stair well @ other

∴ Need collector

$V_u = 361^k$ below 2nd Flr

$V_u = 275^k$ above 2nd Flr

∴ $Q_{UF} = 86^k$ from (N) Collector

Degenkolb

Subject	E/W Tower Demands	Job Number	A7437007
Job	Fire Station 1	By	DAL
		Checked By	
Date	9/24/07	Section	
Page	of		

Floor	North Side	South Side
Basement (10')	554k	480k
1st (13')	301k	350k
2nd (31')	218k	217k
3rd (40')	102k	166k
Roof (56')	396k	331k

Demands shown are in each wall as indicated
These demands will be used to estimate how much load is going btwn tower and Building and therefore how much demand will have to be transfered through collectors

Degenkolb

Subject: Tower Collectors		Job Number A7437007	Date 9/24/07
Job FS1		By DAL	Section
		Checked By	Page of

Demands based on difference in shear @ each flr

Flr	North	South		Use
Roof	294	165	⇒	300^k
3rd	116	51		150^k
2nd	83	163		200^k
1st	253	100		300^k

Determine length of collectors @ each flr based on Diaphragm capacity (estimating purposes only)

1st Flr $V_{ce} = 20$ klf

$$\ell = \frac{300^k}{20 \text{ klf}} = 15'$$

2nd Flr $V_{ce} = 19$ klf

$$\ell = \frac{200^k}{19} = 11'$$

3rd Flr $V_{CE} = 6.8$ klf

$$\ell = \frac{150^k}{6.8} = 25'$$

Degenkolb

Subject. Tower Collector @ Roof		Job Number. A7437007	Date 9/24/07
Job Fire Station 1		By DAL	Section
		Checked By	Page of

@ North end

2½" Conc Slab w/ 3x4 #12/12 Mesh

Reinf running N/S = 12 Ga @ 3" OC

$A_{mesh} = 0.0086 in^2 \left(\frac{12''}{3''}\right) = 0.034 in^2/ft$

Diaphragm Capacity =

$V_c = \frac{2\sqrt{1700'}\,(2.5'')(12')}{1000} = 2.5 klf$

$V_s = (0.0086 in^2)(81.25 ksi)\left(\frac{12'}{2'}\right) = 2.8 klf$

$V_{ce} = 5.3 klf$

length of Collector Req'd $= \frac{300}{5.3 klf} = 56'$

Degenkolb

Subject Tower Collectors		Job Number A7437007	Date 9/24/07
Job FS1		By DAL	Section
		Checked By	Page of

Determine length of collector in tower by anchor capacity or shear wall capacity

Shear wall Capacity 8" Wall = 21 klf

Anchor Capacity: Try 5/8" threaded rod (Simpson)

$V_{cl} = (19.5^k - 1^k)(12''/7.5'') = 29.6^k$

∴ Use 20klf for SD

$l_{req'd} = \frac{300^k}{20klf} = 15'$

Degenkolb

Subject: Diaphragm Cords	Job Number:	Date	
Job	By	Section	
	Checked By	Page	of

Determine extent of (N) Steel Cord

1st Flr Not needed outside of tower, However develop beyond tower for anchorage

2nd Flr Needed to w/in 40' of ends

3rd Flr Needed to w/in 10' of ends
Develop to ends

Roof Same as 3rd Flr

Degenkolb

Subject Enlarge Door on Grid line 1'	Job Number A74137007	Date 1/25/08	
Job Fire Station 1	By DAL	Section	
	Checked By	Page	of

2nd Flr

Slab = $(4/12)(\frac{17'}{2})(150pcf) = 425 plf$

2BS = $(\frac{12)(16)}{144}(\frac{17'}{2})(150pcf) = 1.7^k$ point load

Spandrel = $(7')(9/12)(150pcf) + (30psf)(7') = 1 klf$

Live Load = $(\frac{17'}{2})(60psf) = 510 plf$

$1.2D + 1.6L = 2.5$ klf

$1.2D = 2^k$ pt load

$M_u^- = \frac{Pl}{8} + \frac{wl^2}{12} = 44.3^{k'}$

$M_u^+ = \frac{Pl}{8} + \frac{wl^2}{24} = 24^{k'}$

ANALYSIS SUMMARY

Project	Fire Station 1
Engineer	DAL
Design code	ACI 318-95
Compression face	South
Time of analysis	1/25/2008 4 50 20 PM

Factored Moment Resistance, ØMn (South-North)

Total area	2 563 ft^2
Centroid from origin (0,0)	20 50 in
Moment of inertia, Ix	51690 8 in^4
Capacity reduction factor, Ø	0 90
Axial load resistance, ØPn (ØMn=0)	314 9 Kips
Moment resistance, ØMn (Pu=0 0 Kips)	123 5 Kips*ft
Cracking moment, Mcr	54 6 Kips*ft
Distance to N A , c	3 09 in

Degenkolb

Subject: Settlement	Job Number A7437007	Date 1/29/08	
Job Fire Station 1	By DAL	Section	
	Checked By	Page	of

Based on the analysis performed:

- The increase in demand on framing by ½" settlement is acceptable except for members that frame into shearwalls.
- Therefore allow ¼" settlement @ columns that do not frame into concrete walls

See following pages for settlement Eval.

Degenkolb

Subject Notes (settlement)		Job Number	Date
Job Fire Station 1		By	Section
		Checked By	Page of

- Demands based on 100psf live load plus DL
- All framing stiffness = I_{gross}
- DCR does not consider load redistribution

Results updated xls

Element Number	Load Case	Shear	Negative Moment	% Shear Change due to Settlement	% Moment Change due to Settlement	b	d	As	s	Vc	Vs	Shear Capacity	Moment Capacity	DCR SHEAR	DCR MOMENT
5	Settle	-2 612	-21 95											0 03	0 11
5	Gravity	-47 269	-93 9162											0 53	0 46
5	COMB	-49 882	-115 8662	6%	23%	16	30	0 40	7	25	64	89	204	0 56	0 57
6	Settle	4 616	-45 84											0 05	0 22
6	Gravity	42 521	-144 1844											0 48	0 71
6	COMB	47 137	-190 0243	11%	32%	16	28	0 40	7	23	60	83	153	0 57	1 24
7	Settle	-2 282	-22 542											0 05	0 16
7	Gravity	-22 799	-86 7147											0 50	0 60
7	COMB	-25 081	-109 2566	10%	26%	16	22	0 40	12	18	28	46	144	0 55	0 76
8	Settle	3 722	-37 2319											0 08	0 26
8	Gravity	15 801	-80 7362											0 35	0 56
8	COMB	19 524	-117 9681	24%	46%	16	22	0 40	12	18	28	46	144	0 43	0 82
9	Settle	-2 396	-23 0194											0 03	0 13
9	Gravity	-35 744	-92 25											0 46	0 53
9	COMB	-38 14	-115 2693	7%	25%	16	26	0 40	7	22	56	77	174	0 49	0 66
10	Settle	3 685	-36 0377											0 06	0 31
10	Gravity	31 464	-109 0733											0 48	0 93
10	COMB	35 149	-145 111	12%	33%	16	22	0 40	7	18	47	65	117	0 54	1 24
11	Settle	-1 382	-11 3345											0 07	0 08
11	Gravity	-23 231	-47 3587											1 23	0 34
11	COMB	-24 613	-58 6932	6%	24%	14	26			19	###	19	139	1 30	0 42
12	Settle	2 248	-21 5567											0 14	0 24
12	Gravity	20 757	-73 1732											1 30	0 81
12	COMB	23 006	-94 73	11%	29%	14	22			16	###	16	90	1 44	1 05
13	Settle	-1 09	-9 8839											0 35	0 49
13	Gravity	-4 699	-13 9845											1 49	0 70
13	COMB	-5 79	-23 8685	23%	71%	6	11	0 00	0	3		3	20	1 84	1 19
14	Settle	2 294	-19 472											0 67	0 97
14	Gravity	4 697	-16 3208											1 37	0 82
14	COMB	6 991	-35 7928	49%	119%	6	11	0 00	0	3		3	20	2 04	1 79
15	Settle	-1 237	-10 8654											0 05	0 17
15	Gravity	-14 821	-35 9592											0 57	0 55
15	COMB	-16 058	-46 8246	8%	30%	12	14	0 40	12	9	18	26	65 4	0 61	0 72
16	Settle	2 8	-23 7573											0 32	0 45
16	Gravity	14 671	-47 8182											1 68	0 91
16	COMB	17 471	-71 5756	19%	50%	12	14			9	###	9	52 8	2 00	1 36
17	Settle	-0 589	-5 7613											0 22	0 40
17	Gravity	-3 32	-11 4585											1 22	0 79
17	COMB	-3 909	-17 2198	18%	50%	6	10			3		3	14 5	1 44	1 19
18	Settle	1 241	-10 3661											0 46	0 87
18	Gravity	3 573	-14 0848											1 32	1 18
18	COMB	4 815	-24 4509	35%	74%	6	10			3		3	11 9	1 77	2 05
19	Settle	-0 434	-3 8408											0 17	0 32
19	Gravity	-1 983	-5 6706											0 77	0 48
19	COMB	-2 418	-9 5113	22%	68%	6	9			3		3	11 9	0 94	0 80
20	Settle	1 021	-8 6241											0 40	0 97
20	Gravity	2 338	-10 056											0 91	1 13
20	COMB	3 36	-18 6801	44%	86%	6	9			3		3	8 9	1 31	2 10

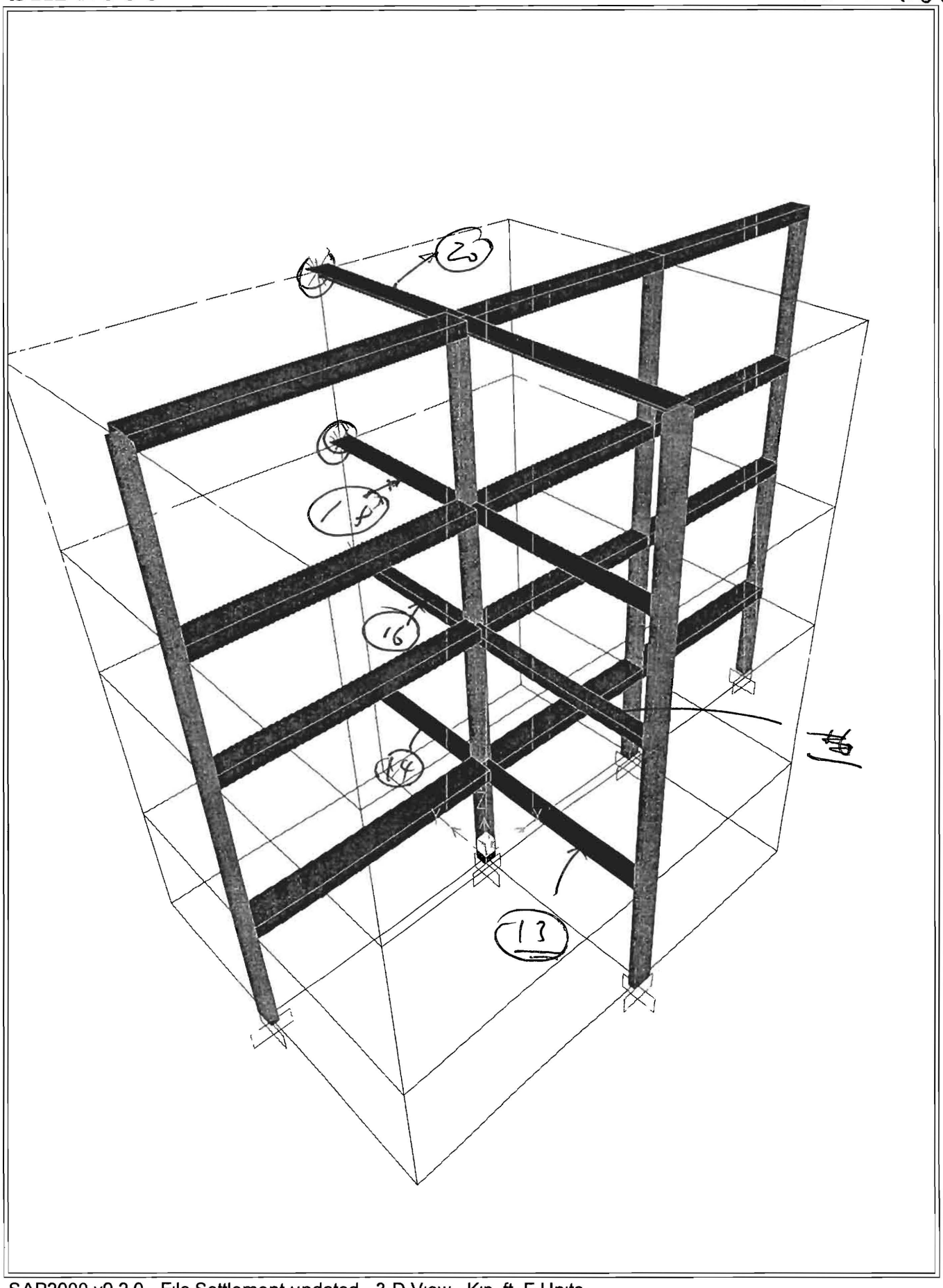

SAP2000 v9 2 0 - File Settlement updated - 3-D View - Kip, ft, F Units

Results.xls

Element Number	Load Case	Shear	Negative Moment	% Shear Change due to Settlement	% Moment Change due to Settlement	b	d	As	s	Vc	Vs	Shear Capacity	Moment Capacity	DCR SHEAR	DCR MOMENT
5	Settle	-4 646	-56 2535											0 05	0 28
5	Gravity	-56 177	-247 8551											0 63	1 21
5	COMB	-60 823	-304 1086	8%	23%	16	30	0 40	7	25	64	89	204	0 68	1 49
6	Settle	6 067	-65 738											0 07	0 32
6	Gravity	44 026	-154 9297											0 49	0 76
6	COMB	50 093	-220 6677	14%	42%	16	28	0 40	7	23	60	83	153	0 60	1 44
7	Settle	-3 461	-41 656											0 08	0 29
7	Gravity	-27 712	-164 8727											0 61	1 14
7	COMB	-31 174	-206 5287	12%	25%	16	22	0 40	12	18	28	46	144	0 68	1 43
8	Settle	4 633	-50 5699											0 10	0 35
8	Gravity	17 027	-95 8816											0 37	0 67
8	COMB	21 66	-146 4514	27%	53%	16	22	0 40	12	18	28	46	144	0 47	1 02
9	Settle	-3 826	-46 6158											0 05	0 27
9	Gravity	-42 033	-195 2151											0 54	1 12
9	COMB	-45 859	-241 8309	9%	24%	16	26	0 40	7	22	56	77	174	0 59	1 39
10	Settle	4 751	-51 1203											0 07	0 44
10	Gravity	33 151	-126 2299											0 51	1 08
10	COMB	37 902	-177 3502	14%	40%	16	22	0 40	7	18	47	65	117	0 58	1 52
11	Settle	-2 54	-30 9778											0 13	0 22
11	Gravity	-28 17	-131 8896											1 49	0 95
11	COMB	-30 71	-162 8674	9%	23%	14	26			19	###	19	139	1 62	1 17
12	Settle	3 175	-34 127											0 20	0 38
12	Gravity	22 292	-86 1164											1 39	0 96
12	COMB	25 467	-120 2435	14%	40%	14	22			16	###	16	90	1 59	1 34
13	Settle	-1 468	-14 4484											0 47	0 72
13	Gravity	-5 183	-19 3258											1 65	0 97
13	COMB	-6 651	-33 7741	28%	75%	6	11	0 00	0	3		3	20	2 12	1 69
14	Settle	2 176	-18 7605											0 63	0 94
14	Gravity	4 415	-14 6034											1 29	0 73
14	COMB	6 591	-33 3639	49%	128%	6	11	0 00	0	3		3	20	1 92	1 67
15	Settle	-1 81	-17 7053											0 07	0 27
15	Gravity	-16 854	-61 1819											0 64	0 94
15	COMB	-18 664	-78 8872	11%	29%	12	14	0 40	12	9	18	26	65 4	0 71	1 21
16	Settle	2 586	-22 4435											0 30	0 43
16	Gravity	14 158	-44 6006											1 62	0 84
16	COMB	16 744	-67 0441	18%	50%	12	14			9	###	9	52 8	1 92	1 27
17	Settle	-0 748	-7 3607											0 28	0 51
17	Gravity	-3 659	-14 6157											1 35	1 01
17	COMB	-4 407	-21 9765	20%	50%	6	10			3		3	14 5	1 62	1 52
18	Settle	1 107	-9 5475											0 41	0 80
18	Gravity	3 226	-11 949											1 19	1 00
18	COMB	4 333	-21 4965	34%	80%	6	10			3		3	11 9	1 60	1 81
19	Settle	-0 635	-6 2488											0 25	0 53
19	Gravity	-2 359	-10 1109											0 92	0 85
19	COMB	-2 994	-16 3597	27%	62%	6	9			3		3	11 9	1 16	1 37
20	Settle	0 939	-8 1018											0 37	0 91
20	Gravity	2 153	-8 8358											0 84	0 99
20	COMB	3 092	-16 9376	44%	92%	6	9			3		3	8 9	1 20	1 90

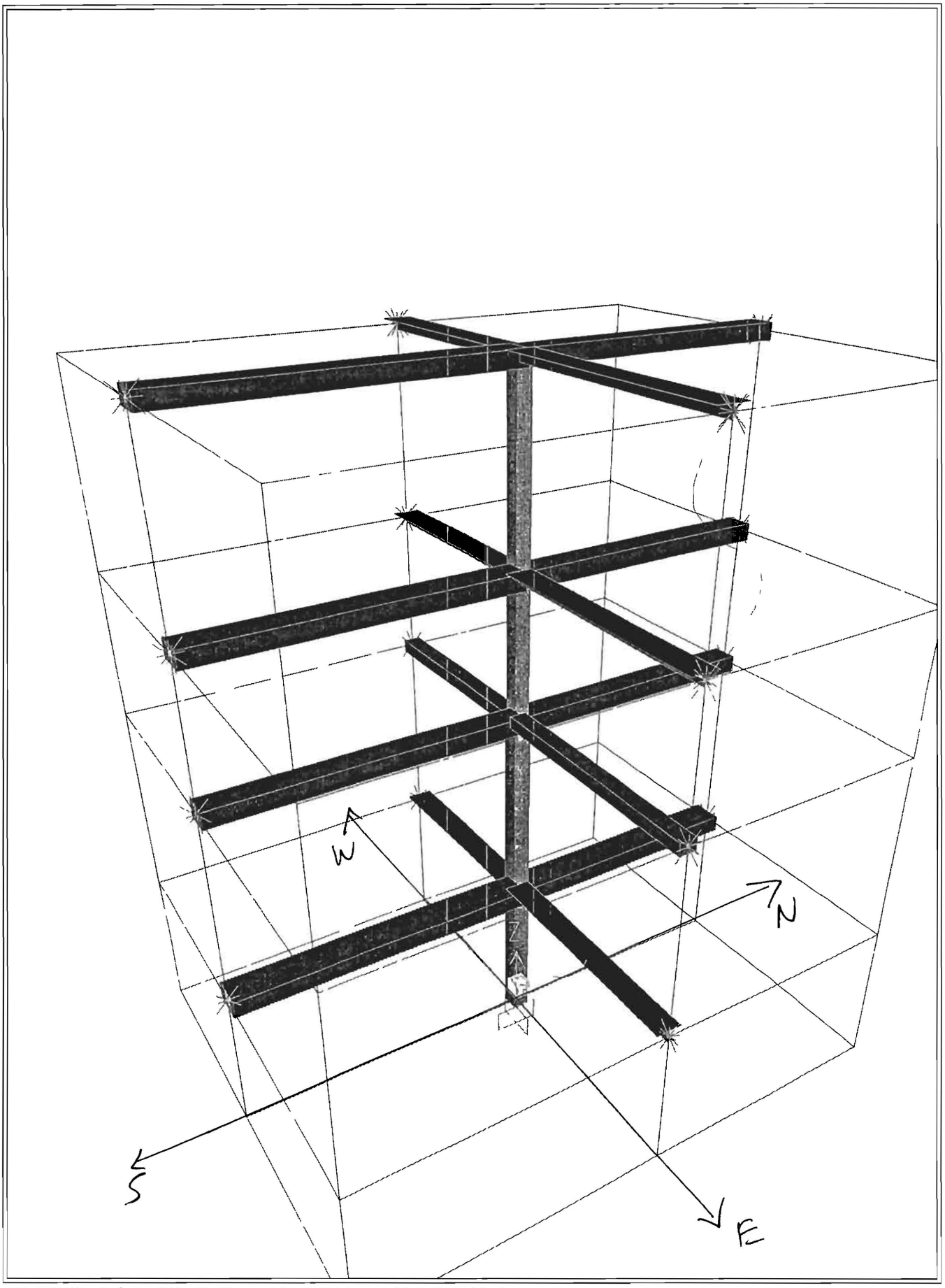

SAP2000 v9 2 0 - File Settlement - 3-D View - Kip, ft, F Units

SAP2000

1/24/08 20 20 42

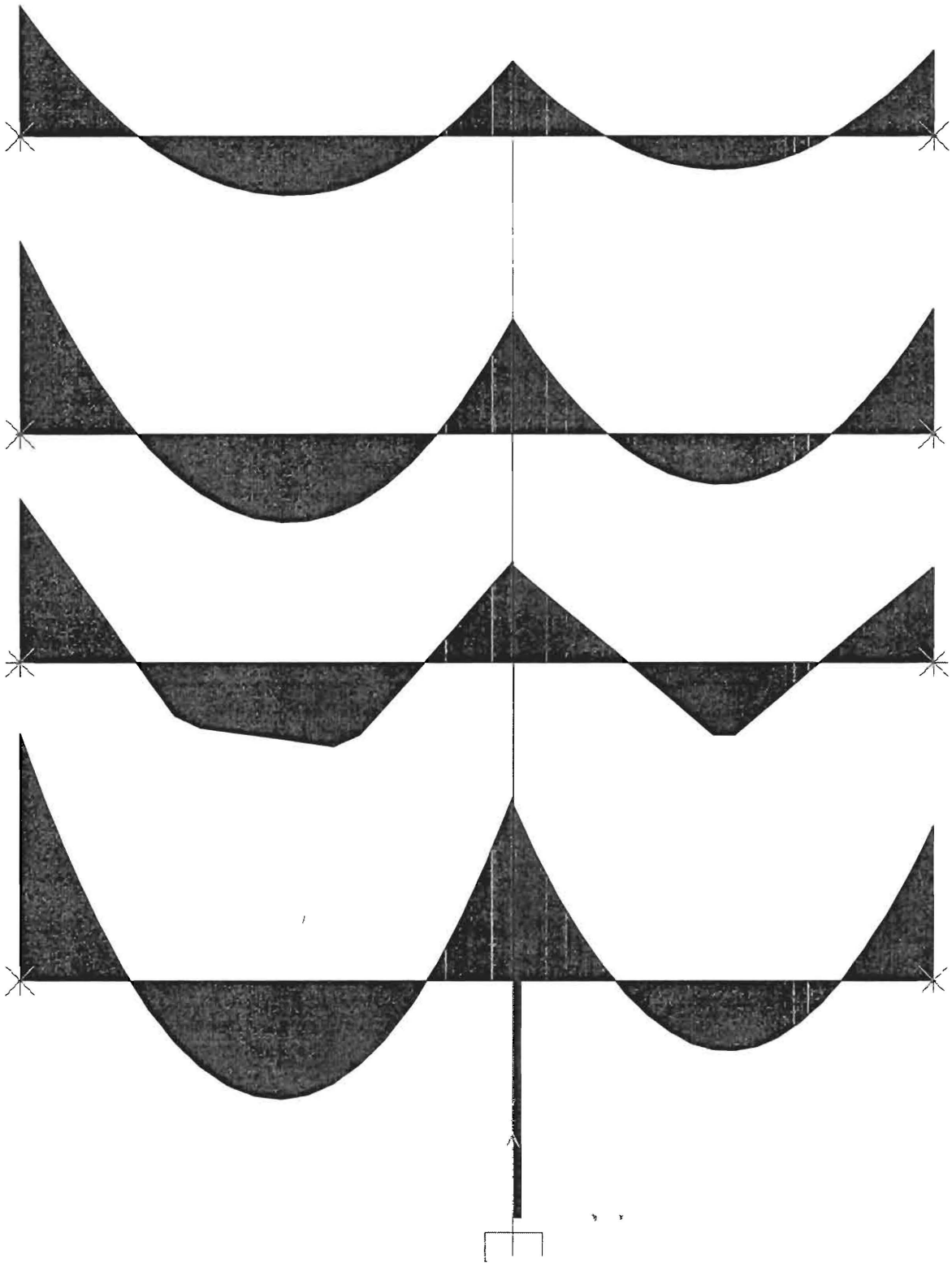

Gravity Only
N/S Framing

SAP2000 v9 2 0 - File Settlement - Moment 3-3 Diagram (Gravity) - Kip, ft, F Units

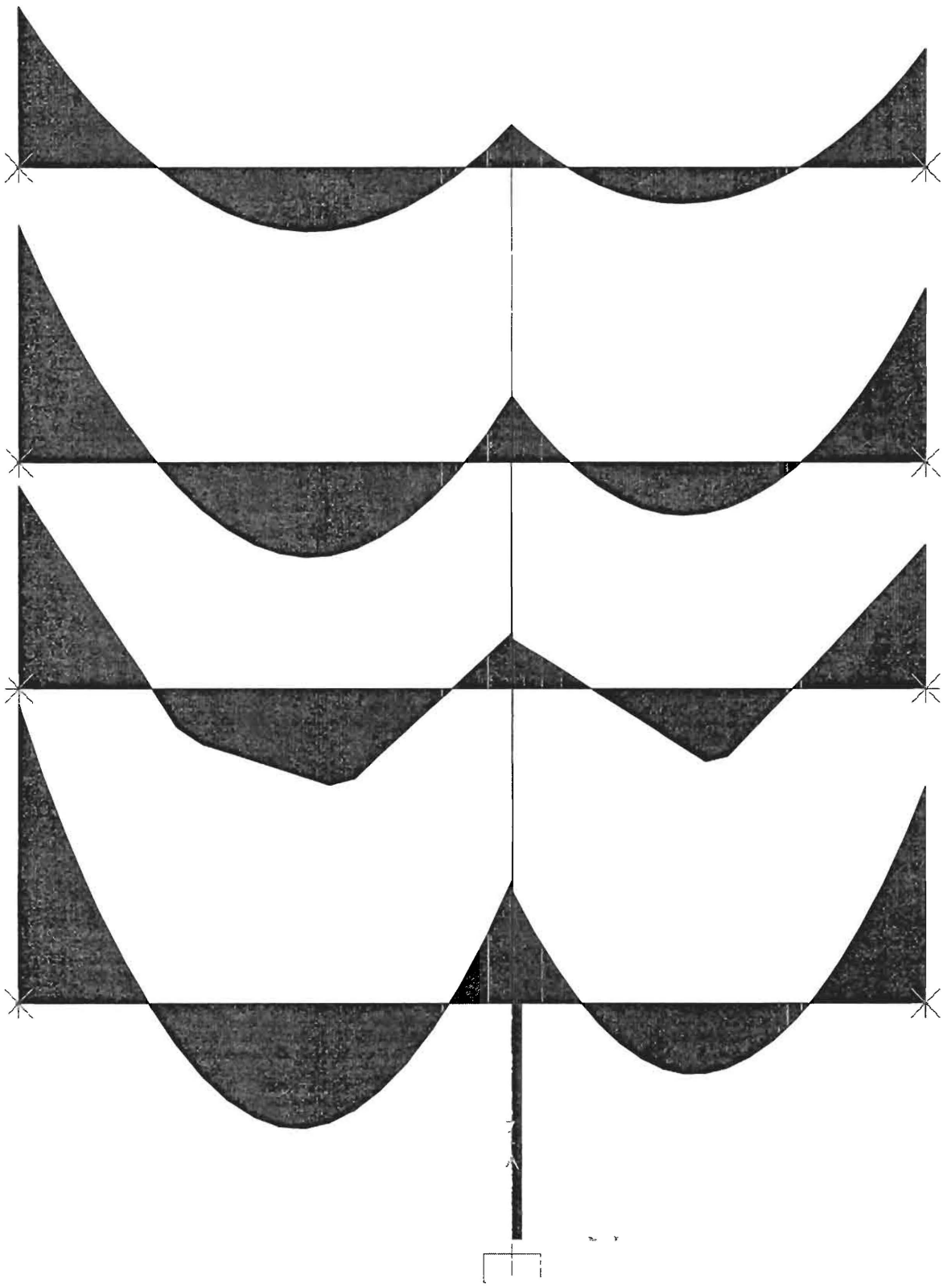

Gravity + Settlement
N/S Framing

SAP2000

1/24/08 20 20 58

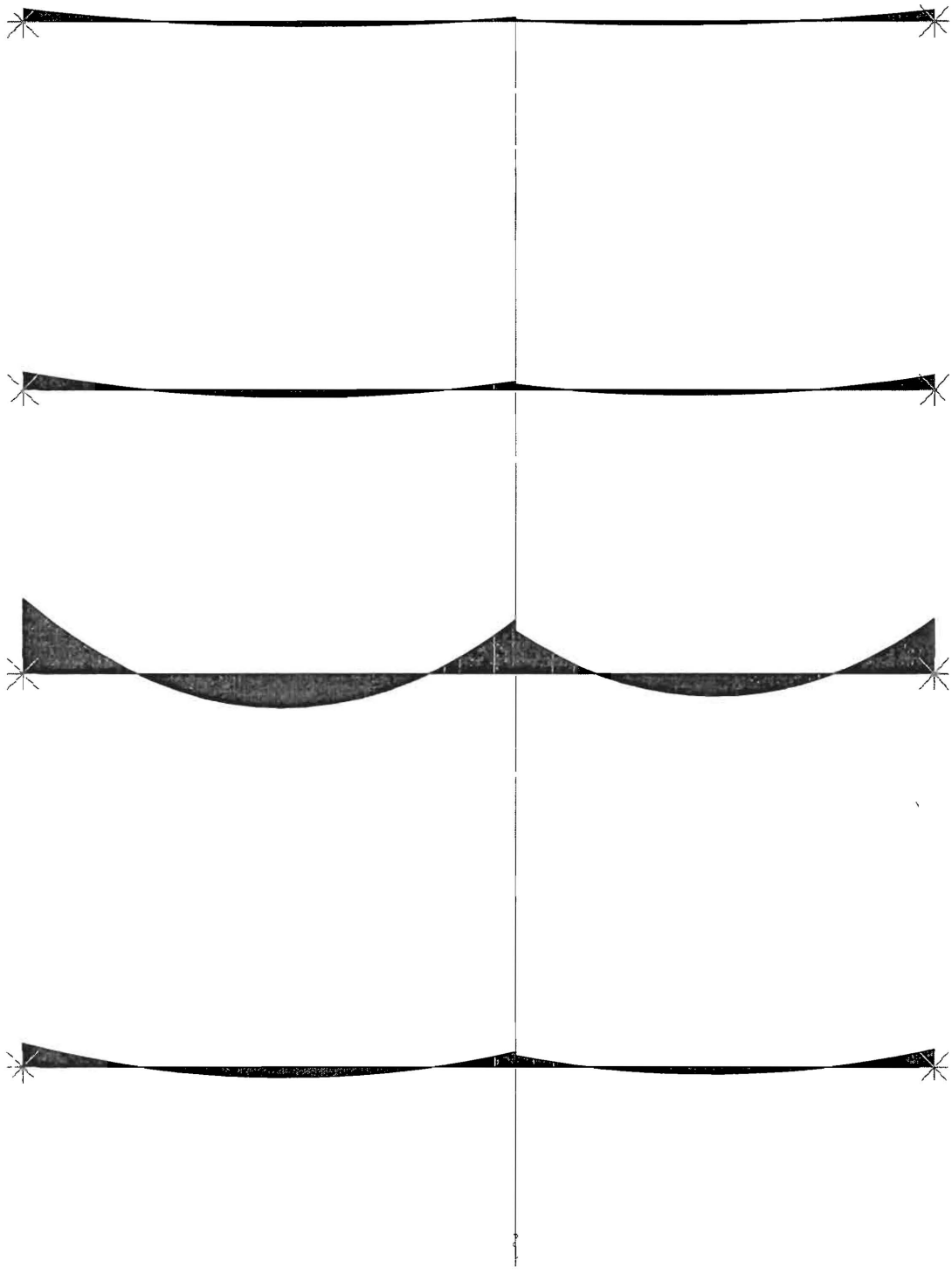

Gravity Only

E/W Framing

SAP2000 v9 2 0 - File Settlement - Moment 3-3 Diagram (Gravity) - Kip, ft, F Units

SAP2000

1/24/08 20 21 03

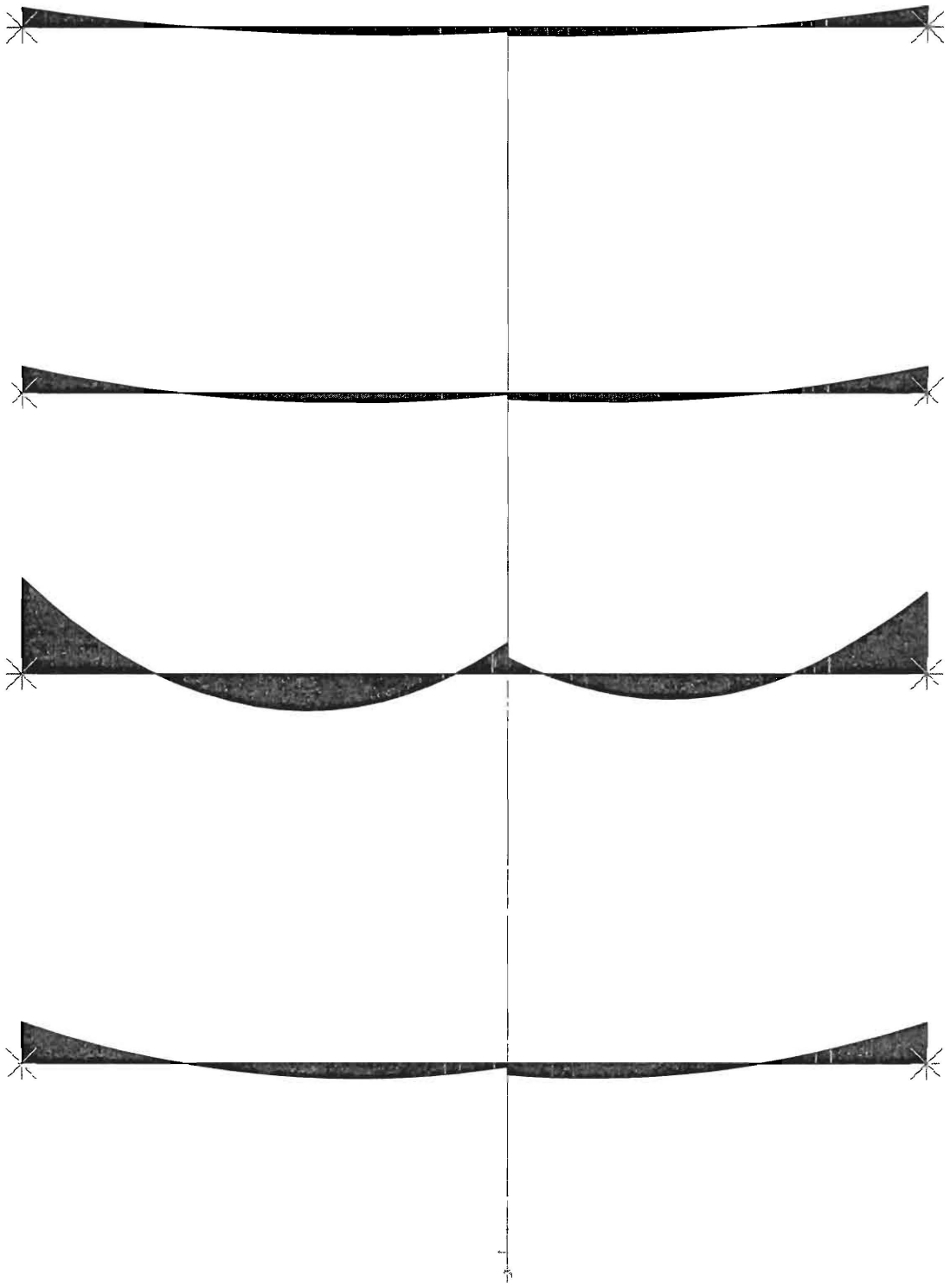

Gravity + Settlement
N/S Framing

SAP2000 v9 2 0 - File Settlement - Moment 3-3 Diagram (COMB) - Kip, ft, F Units

Subject: Settlement Check		Job Number A7437007	Date 1/24/08
Job Fire Station 1		By DAL	Section
		Checked By	Page of

Gravity Loads on Frames

East/West Framing

1st Flr

$DL = (5.5'' \times 10' + 25.5'' \times 3'')(150pcf) = 136\ plf$

$LL = (2')(100psf) = 200\ plf$

$1.2D + 1.6L = 0.5\ klf$

2nd Flr

$DL = (\frac{10.5'}{2} + \frac{8.5'}{2})(60psf) = 570\ plf$

$LL = (\frac{10.5'}{2} + \frac{8.5'}{2})(60psf) = 570\ plf$

$1.2D + 1.6L = 1.6\ klf$

3rd Flr

$DL = (5.5'' \times 8' + 25.5'' \times 2\frac{1}{2}'')(150pcf) = 112\ plf$

$LL = (2')(60psf) = 120\ plf$

$1.2D + 1.6L = 326\ plf$

Roof

$DL = (5.5' \times 8'' + 25.5 \times 2)(150pcf) = 100\ plf$

$S = (2')(25psf) = 50\ plf$

$1.2D + 1.6S = 200\ plf$

Subject. Settlement Check		Job Number A7437007	Date 1/24/08
Job Fire Station 1		By DAL	Section
		Checked By	Page of

Gravity Loads on Frames

North/South Framing

1st Flr

DL = (10' + 8.5)(60psf) = 1110 plf

LL = (10' + 8.5)(100psf) = 1850 plf

1.2D + 1.6L = 4.3 klf

2nd Flr

Btwn A + B

DL = (10' + 8.5')(8')(60psf) = 8.9k pt loads @ 1/3 pts

LL = (10 + 8.5)(8)(60psf) = 8.9k pt loads

1.2D + 1.6L = 25k pt loads @ 1/3 pts

DL/LL = (10 + 8.5)(11')(60psf) = 12.2k pt load @ Midspan

1.2D + 1.6L = 34.2k pt load @ Midspan

3rd Flr

DL = (10' + 8.5')(60 psf) = 1110 plf

LL = (10' + 8.5')(60psf) = 1110 plf

1.2D + 1.6L = 3.1 klf

Roof

DL = (10' + 8.5')(60psf) = 1110 plf

S = (10 + 8.5)(25psf) = 463 plf

1.2D + 1.6S = 2.1 klf

Section B: Seismic Retrofit

Degenkolb

Subject Retrofit Design		Job Number A7437007	Date
Job Fire Station 1		By DAL	Section
		Checked By	Page of

This portion of the calcs reflects the final version of the analysis At this point, the response spectra has been changed from the ASCE 31 definition to the ASCE 41 definition w/ base slab averaging.

Capacity based design was used extensively to control failure modes and therefore influenced (increased) demands on (N) members to ensure ductile responses

Degenkolb

Subject ASCE 41 Base Shear		Job Number A743/007 00	Date 20-Nov 2007
Job Fire Station 1		By DAL	Section
		Checked By	Page/of

ASCE 41 Equivalent Lateral Force Procedure Base Shear & Vertical Force Distribution (2/3 MCE)

INPUT DATA

S_s	Short Period Response Acceleration =	88.34	% g	(from maps)
S_1	Spectral Response Acceleration @ 1 sec =	34.39	% g	(from maps)
SC	Soil Class =	D	OK	(A through F) 1 6 1 4 1
W	Total Building Weight =	9085	kips	
h	Total Building Height =	80	feet	
A_b	Base Area of Building =	13000	ft^2	
C_t	Building System Coefficient =	0.02		(EQ 3-6)
β	Period Determination Exponent =	0 75		(EQ 3-6)
β_D	Damping Ratio =	0 05		
n	Number of Stories =	7		
DCR_{max}	Maximum DCR=	2		
C_m	Effective Mass Factor =	0 8		ASCE 41 Table 3-1

CALCULATE BASE SHEAR

T	Approximate Fundamental Period of Vibration = C_t h =	0 535	sec	(EQ 3 6)
k	Vertical Force Distribution Exponent =	1 02		(EQ 3 11)

Table 1-5	S_1 <= 0 1	S_1 = 0 2	S_1 = 0 3	S_1 = 0 4	S >= 0 5
Soil Class D	2 4	2 0	1 8	1 6	1 5
F				1 71	

F Site Coefficient for S_1 = 1 71

Table 1-4	S <= 0 25	S = 0 50	S = 0 75	S = 1 00	S_s >= 1 25
Soil Class D	1 6	1 4	1 2	1 1	1 0
F				1 11	

F	Site Coefficient for S =	1 11		
S_{XS}	Modified Short Period Acceleration = 2/3 F S =	0 73		(EQ 1-4)
S_{X1}	Modified 1 sec Period Acceleration = 2/3 F S_1 =	0 39		(EQ 1 5)
B_1	$B_1 = 4/[5\ 6-\ln(100\beta_D)]$	1 00237		
S_{D1}	Design 1 sec Period Acceleration = S_{M1} =	0 39		
T_s	$T_S = S_{X1}/S_{XS}$ =	0 54	sec	(EQ 1 11)
T_0	$T_0 = 0\ 2T_S$ =	0 11	sec	(EQ 1 12)
S_a	Design Spectral Acceleration at Building Period =	0 72	sec	(EQ 1 8 1 9 1 10)
R	Strength Ratio = $DCR_{max}\ C_m/1\ 5$ =	1 07		
a	Site Class Factor =	60		
C_1	Elastic-Inelastic Response Modification Factor =	1 00		
C_2	Stiffness Degredation Response Modification Factor =	1 00		
V	Base Shear = $C_t\ C_2\ C_m\ S\ ^*W$ =	**5281**	**kips**	(EQ 3-9)

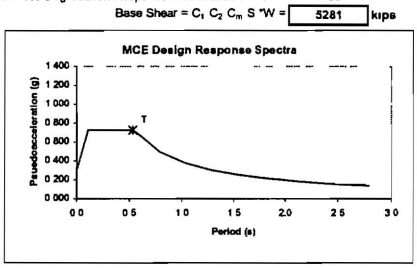

CALCULATE STORY FORCES (ASCE EQS 9 5 5 4-1 9 5 5 4-2)

Story	w (kips)	h_x (feet)	$w\ h_x^k$	C_v	F (kips)	V (kips)
Roof	88	85.25	8109	0 03	136	136
Level 7	178	72	13812	0 04	232	368
Level 6	178	61 5	11765	0 04	197	565
Level 5	1356	54.5	79257	0 25	1329	1894
Level 4	2273	39.5	95748	0 30	1606	3500
Level 3	2528	28	75033	0 24	1259	4759
Level 2	2484	12	31133	0 10	522	5281
Base			0	0 00	0	5281
Σ =	9085		314857	1 00		5281

SUM OF STORY WEIGHTS EQUALS TOTAL WEIGHT INPUT OKAY

Base Slab Averaging

a=	176	ft
b=	73	ft
b_e=	113	
RRS=	0 86	@ T = 0 2s

Response generated from two thirds of 10% PE/50 Years ground motion

T (sec)	SA (g)	RRS_{bsa}	SA_{FIM} (g)
0 00	**0 72**	0 86	**0 62**
0 11	**0 72**	0 86	**0 62**
0 20	**0 72**	0 86	**0 62**
0 30	**0 72**	0 91	**0 66**
0 40	**0 72**	0 94	**0 68**
0 54	**0 72**	0 96	**0 69**
0 79	**0 50**	0 97	**0 48**
1 04	**0 38**	0 98	**0 37**
1 29	**0 30**	0 98	**0 30**
1 54	**0 25**	0 99	**0 25**
1 79	**0 22**	0 99	**0 22**
2 04	**0 19**	0 99	**0 19**
2 29	**0 17**	0 99	**0 17**
2 54	**0 15**	0 99	**0 15**
2 79	**0 14**	0 99	**0 14**

Response generated from 10/50 SITE SPECIFIC ground motion

0 010	**0 200**
0 200	**0 433**
1 000	**0 433**
1 500	**0 300**
2 000	**0 163**
2 500	**0 118**
3 000	**0 098**
4 000	**0 074**

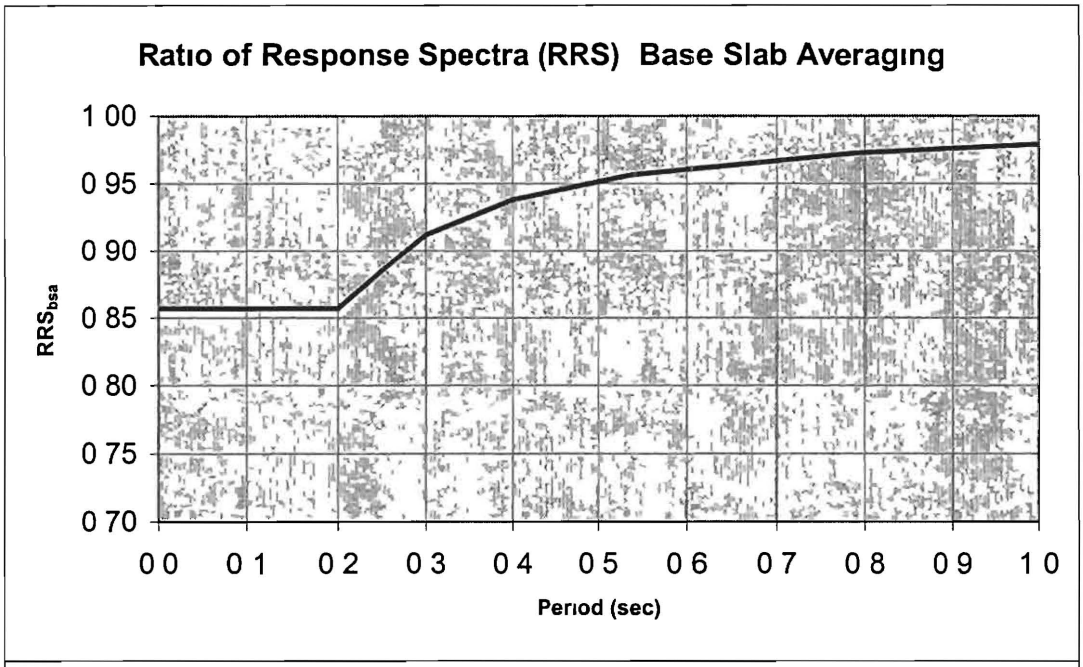
Ratio of Response Spectra (RRS) Base Slab Averaging
1 00
0 95
0 90
0 85
0 80
0 75
0 70
RRSbsa
0 0
0 1
0 2
0 3
0 4
0 5
0 6
0 7
0 8
0 9
1 0
Period (sec)

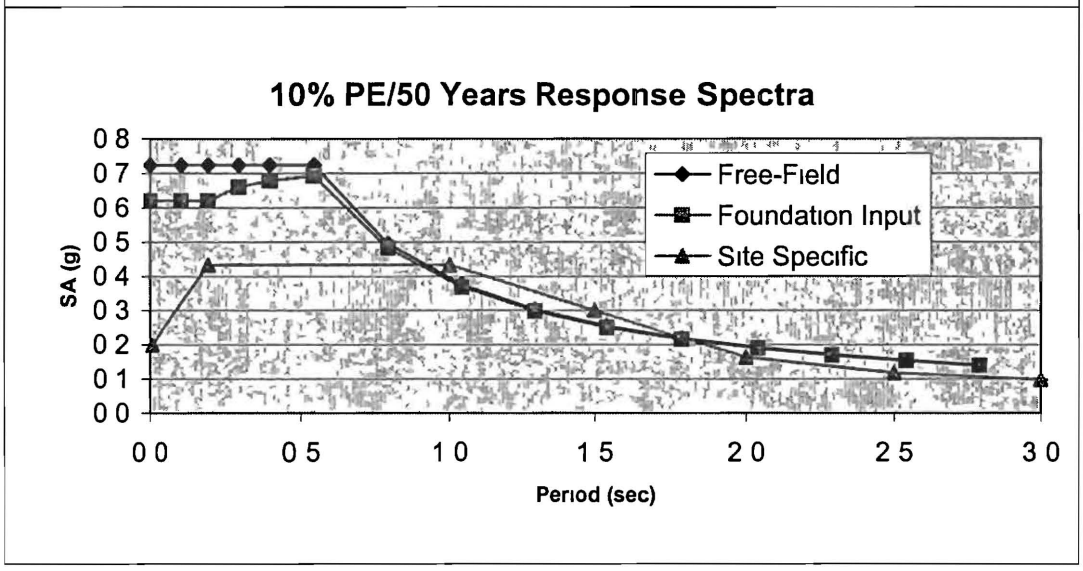
10% PE/50 Years Response Spectra
0 8
0 7
0 6
0 5
0 4
0 3
0 2
0 1
0 0
SA (g)
Free-Field
Foundation Input
Site Specific
0 0
0 5
1 0
1 5
2 0
2 5
3 0
Period (sec)

Base Slab Averaging

a=	176	ft
b=	73	ft
b_e=	113	
RRS=	0 86	@ T = 0 2s

Response generated from 2% PE/50 Years ground motion

T (sec)	SA (g)	RRS_{bsa}	SA_{FIM} (g)
0 0	**0 44**	0 86	**0 37**
0 1	**1 09**	0 86	**0 93**
0 2	**1 09**	0 86	**0 93**
0 3	**1 09**	0 91	**0 99**
0 4	**1 09**	0 94	**1 02**
0 5	**1 09**	0 96	**1 04**
0 8	**0 74**	0 97	**0 72**
1 0	**0 56**	0 98	**0 55**
1 3	**0 46**	0 98	**0 45**
1 5	**0 38**	0 99	**0 38**
1 8	**0 33**	0 99	**0 32**
2 0	**0 29**	0 99	**0 29**
2 3	**0 26**	0 99	**0 25**
2 5	**0 23**	0 99	**0 23**
2 8	**0 21**	0 99	**0 21**

Response generated from 2/50 SITE SPECIFIC ground motion

0 010	**0 300**
0 200	**0 650**
1 500	**0 650**
1 800	**0 430**
2 000	**0 350**
2 500	**0 253**
3 000	**0 211**
4 000	**0 158**

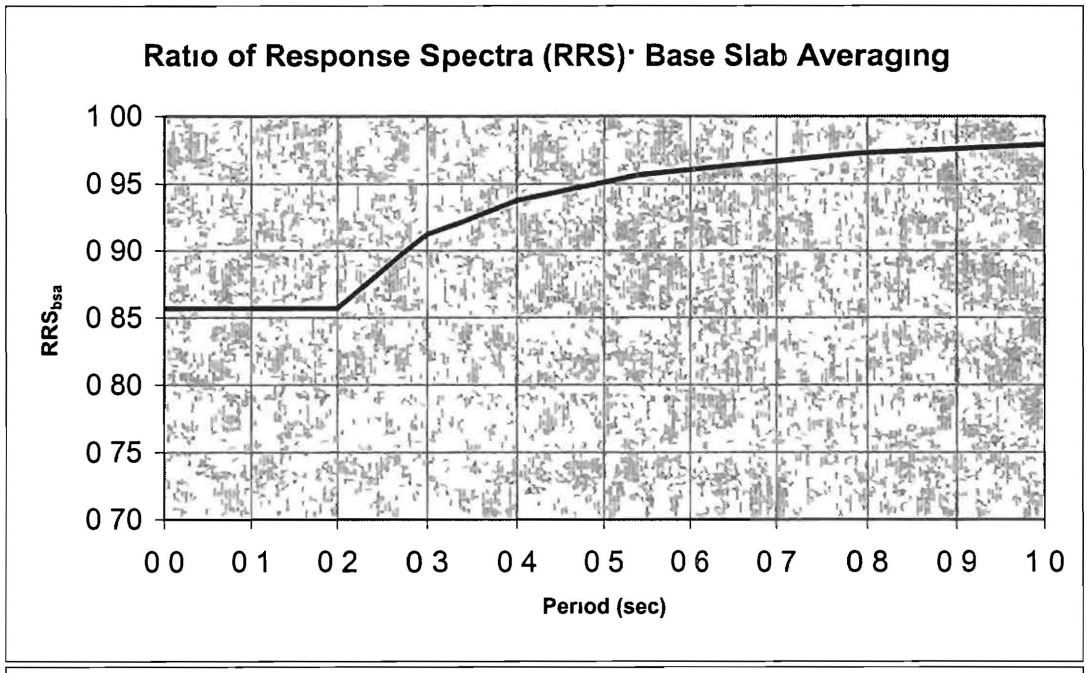
Ratio of Response Spectra (RRS): Base Slab Averaging
1 00
0 95
0 90
0 85
0 80
0 75
0 70
RRS$_{bsa}$
0 0
0 1
0 2
0 3
0 4
0 5
0 6
0 7
0 8
0 9
1 0
Period (sec)

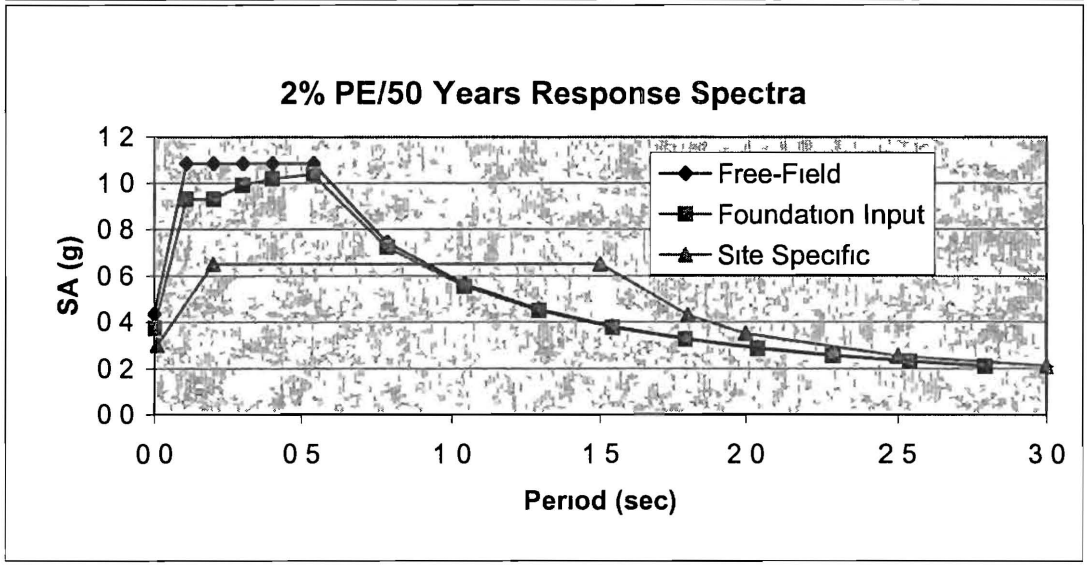
2% PE/50 Years Response Spectra
1 2
1 0
0 8
0 6
0 4
0 2
0 0
SA (g)
Free-Field
Foundation Input
Site Specific
0 0
0 5
1 0
1 5
2 0
2 5
3 0
Period (sec)

Labels for lines of Resistance

Degenkolb

KEYNOTES.

1. STEEL PL BOLTED TO (E) CONCRETE BEAM BENEATH FLOOR WITH ADHESIVE THREADED RODS @ 6" ON CENTER
2. CORE THROUGH EXISTING COLUMN AS REQUIRED TO PASS STEEL PLATE TYPICAL.
3. STEEL PL BOLTED TO TOWER WALL AND UNDERSIDE OF OF EXISTING FLOOR WITH ADHESIVE ANCHORS AT 6" ON CENTER OVER ENTIRE LENGTH
4. CORE THROUGH EXISTING WALL AS REQUIRED TO PASS STEEL PL, TYPICAL.
5. INFILL PORTION OF EXISTING OPENING WITH 9" CONCRETE WALL.
6. FIBER REINFORCED POLYMER COMPOSITE WRAP FULL HEIGHT OF EXISTING COLUMN
7. CONCRETE SHEAR WALL BELOW
8. 12" CONCRETE SHEAR WALL WITH #5 AT 12" ON CENTER, EACH WAY EACH FACE AND ADHESIVE ANCHORS TO EXISTING WALL AT 24" ON CENTER EACH WAY

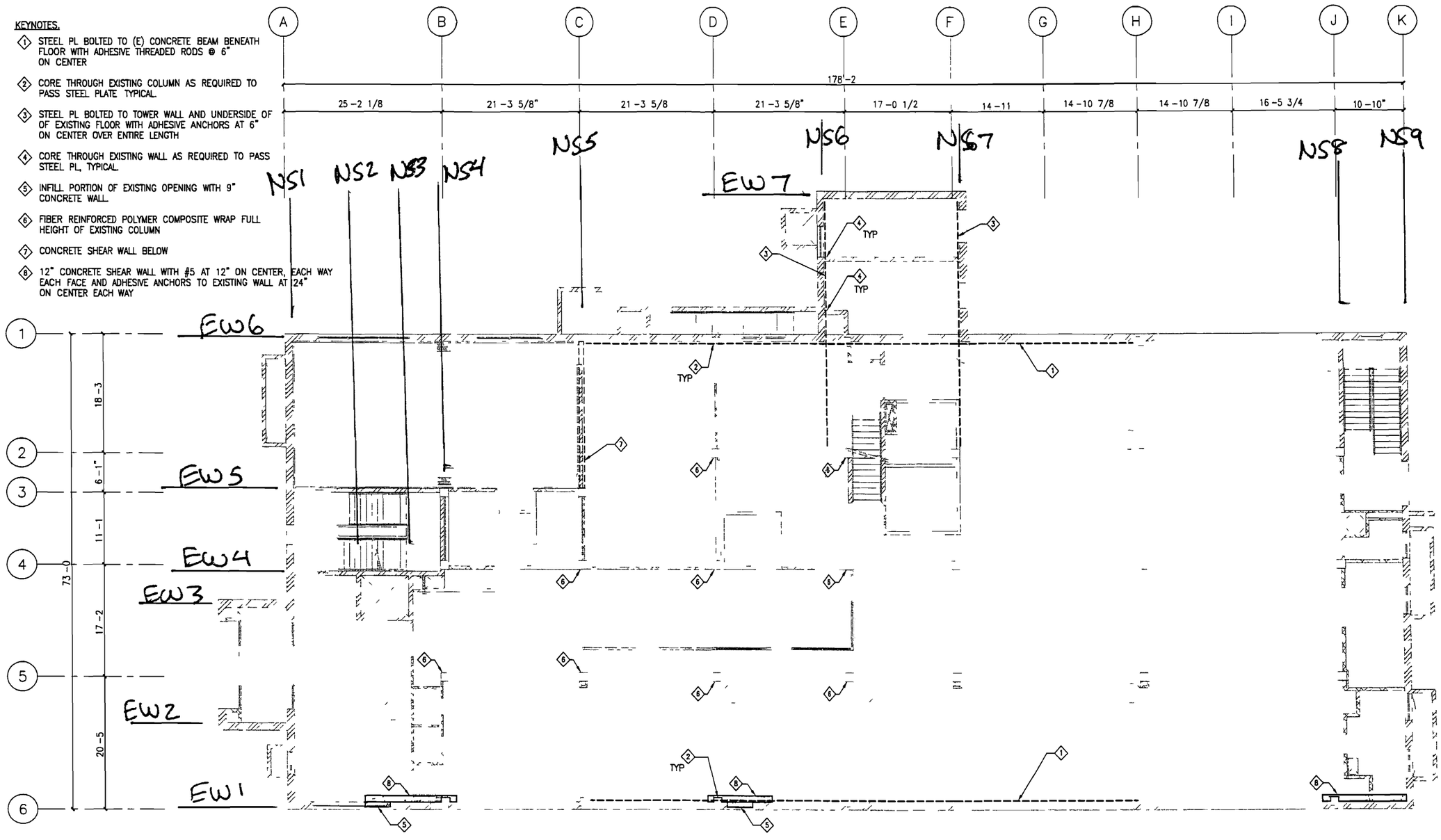

1/8"=1'-0"

FIGURE A.2
FIRST FLOOR PLAN-OPTION A

PORTLAND FIRE STATION ONE SEISMIC UPGRADE & REMODEL
PORTLAND, OREGON

Comparison btwn As-built and Retrofit

As-Built Model Results

1st Floor Demands Along Each Line of Resistance

Line of Action	Vu (kip)
1-1EW1	469 988
1-1EW2	108 629
1-1EW3	137 063
1-1EW4	245 345
1-1EW5	373 555
1-1EW6	1942 119
1-1EW7	250 332
1-1NS1	1382 433
1-1NS2	36 786
1-1NS3	48 245
1-1NS4	197 236
1-1NS5	344 573
1-1NS6	278 661
1-1NS7	254 164
1-1NS8	132 973
1-1NS9	1494 06

2nd Floor Demands Along Each Line of Resistance

Line of Action	Vu (kip)
1-2EW1	93 296
1-2EW2	0
1-2EW3	0
1-2EW4	122 616
1-2EW5	265 761
1-2EW6	2051 373
1-2EW7	202 02
1-2NS1	1361 903
1-2NS2	12 523
1-2NS3	19 784
1-2NS4	116 056
1-2NS5	0
1-2NS6	153 587
1-2NS7	254 164
1-2NS8	71 234
1-2NS9	1307 325

3rd Floor Demands Along Each Line of Resistance

Line of Action	Vu (kip)
1-3EW1	113 18
1-3EW2	0
1-3EW3	0
1-3EW4	95 611
1-3EW5	162 636
1-3EW6	1050 625
1-3EW7	185 035
1-3NS1	809 749
1-3NS2	6 305
1-3NS3	10 017
1-3NS4	47 746
1-3NS5	0
1-3NS6	146 102
1-3NS7	124 025
1-3NS8	92 024
1-3NS9	878 766

Retrofit Model Results

1st Floor Demands Along Each Line of Resistance

Line of Action	Vu (kip)
1-1EW1	684 139
1-1EW2	105 157
1-1EW3	128 199
1-1EW4	284 966
1-1EW5	243 006
1-1EW6	1702 06
1-1EW7	292 15
1-1NS1	1414 513
1-1NS2	39 728
1-1NS3	48 466
1-1NS4	189 47
1-1NS5	339 924
1-1NS6	296 487
1-1NS7	259 237
1-1NS8	131 613
1-1NS9	1455 108

2nd Floor Demands Along Each Line of Resistance

Line of Action	Vu (kip)
1-2EW1	845 176
1-2EW2	0
1-2EW3	0
1-2EW4	93 159
1-2EW5	153 4
1-2EW6	1300 388
1-2EW7	243 635
1-2NS1	1321 351
1-2NS2	13 956
1-2NS3	18 35
1-2NS4	103 823
1-2NS5	0
1-2NS6	206 747
1-2NS7	259 237
1-2NS8	58 429
1-2NS9	1243 911

Walls do not extend above 1st Flr

3rd Floor Demands Along Each Line of Resistance

Line of Action	Vu (kip)
1-3EW1	769 827
1-3EW2	0
1-3EW3	0
1-3EW4	41 402
1-3EW5	87 563
1-3EW6	477 014
1-3EW7	225 141
1-3NS1	840 508
1-3NS2	8 664
1-3NS3	11 991
1-3NS4	29 742
1-3NS5	0
1-3NS6	197 649
1-3NS7	186 341
1-3NS8	90 308
1-3NS9	878 39

Comparison btwn As-built and Retrofit

Difference Line of Action	Kips
1st Floor Demands Along Each Line of Resistance	
Line of Action	
1-1EW1	214 151
1-1EW2	-3 472
1-1EW3	-8 864
1-1EW4	39 621
1-1EW5	-130 549
1-1EW6	-240 059
1-1EW7	41 818
1-1NS1	32 08
1-1NS2	2 942
1-1NS3	0 221
1-1NS4	-7 766
1-1NS5	-4 649
1-1NS6	17 826
1-1NS7	5 073
1-1NS8	-1 36
1-1NS9	-38 952
2nd Floor Demands Along Each Line of Resistance	
Line of Action	
1-2EW1	751 88
1-2EW2	0
1-2EW3	0
1-2EW4	-29 457
1-2EW5	-112 361
1-2EW6	-750 985
1-2EW7	41 615
1-2NS1	-40 552
1-2NS2	1 433
1-2NS3	-1 434
1-2NS4	-12 233
1-2NS5	0
1-2NS6	53 16
1-2NS7	5 073
1-2NS8	-12 805
1-2NS9	-63 414
3rd Floor Demands Along Each Line of Resistance	
Line of Action	
1-3EW1	656 647
1-3EW2	0
1-3EW3	0
1-3EW4	-54 209
1-3EW5	-75 073
1-3EW6	-573 611
1-3EW7	40 106
1-3NS1	30 759
1-3NS2	2 359
1-3NS3	1 974
1-3NS4	-18 004
1-3NS5	0
1-3NS6	51 547
1-3NS7	62 316
1-3NS8	-1 716
1-3NS9	-0 376

Difference Line of Action	%
1st Floor Demands Along Each Line of Resistance	
Line of Action	
1-1EW1	46%
1-1EW2	-3%
1-1EW3	-6%
1-1EW4	16%
1-1EW5	-35%
1-1EW6	-12%
1-1EW7	17%
1-1NS1	2%
1-1NS2	8%
1-1NS3	0%
1-1NS4	-4%
1-1NS5	-1%
1-1NS6	6%
1-1NS7	2%
1-1NS8	-1%
1-1NS9	-3%
2nd Floor Demands Along Each Line of Resistance	
Line of Action	
1-2EW1	806%
1-2EW2	#DIV/0!
1-2EW3	#DIV/0!
1-2EW4	-24%
1-2EW5	-42%
1-2EW6	-37%
1-2EW7	21%
1-2NS1	-3%
1-2NS2	11%
1-2NS3	-7%
1-2NS4	-11%
1-2NS5	#DIV/0!
1-2NS6	35%
1-2NS7	2%
1-2NS8	-18%
1-2NS9	-5%
3rd Floor Demands Along Each Line of Resistance	
Line of Action	
1-3EW1	580%
1-3EW2	#DIV/0!
1-3EW3	#DIV/0!
1-3EW4	-57%
1-3EW5	-46%
1-3EW6	-55%
1-3EW7	22%
1-3NS1	4%
1-3NS2	37%
1-3NS3	20%
1-3NS4	-38%
1-3NS5	#DIV/0!
1-3NS6	35%
1-3NS7	50%
1-3NS8	-2%
1-3NS9	0%

Degenkolb

Subject: As-Built vs Retrofit	Job Number A7437007	Date	
Job Fire Station 1	By DAL	Section	
	Checked By	Page	of

Retrofit redistributes loads in Bldg LFRS
↳ result of remediation of torsional response as-built

Those walls that experienced Net Increase maintain a DCR < 1.0, Not including any applicable m-factors Therefore, the slight increase in some (E) walls is okay.

Wall	Capacity (klf)	Demand (klf)	DCR
1-1 EW4	21	285k/18' = 16klf	0.75
1-1 EW7	23	292k/23' = 13klf	0.55
1-1 NS2	21	40k/8' = 5klf	0.25
1-1 NS6	23	296k/22 = 13klf	0.6
1-2 EW7	21	244k/23' = 11klf	0.5
1-2 NS2	21	14k/8' = 2klf	0.1
1-2 NS6	21	207k/22' = 9 klf	0.5
1-3 EW7	21	225k/23' = 10 klf	0.5
1-3 NS2	21	9k/8' = 1klf	0.05
1-3 NS3	21	12k/8' = 2klf	0.07
1-3 NS7	21	186k/22' = 9 klf	0.4

Note EW1 should Increase b/c walls/stiffness added

∴ ok

Subject. Infill @ 2nd + 3rd Flr walls	Job Number A7437007	Date 1/2/08	
Job Fire Station 1	By DAL	Section	
	Checked By	Page	of

Maximum Demand from Analysis

$V_{UD} = 170^k$

Design infill to be elastic to ensure stiffness throughout seismic event

Pier Strength Shear

$V_{ce,conc} = 3\sqrt{6000}(14")(17") \times 2 + 3\sqrt{2300}(14)(14) = 139^k$

$V_{ce,stl} = (60ksi)(2 \times 0.11in^2)\left(\frac{46}{6}\right) = 101^k$ (#3 @ 6" O.C.)

$V_{CE} = 240^k > V_{UD}$ ok (elastic)

Flexure vs Shear Controlled

$M_{bal} = \frac{Vh}{2} = \frac{(240^k)(6')}{2} = 720^{k'}$

$M_{UD} = \frac{(170^k)(6')}{2} = 510^{k'}$

$M_{CE} = 693^{k'} > M_{UD}$ ok (elastic)

$M_{CE} \approx M_{bal}$ => Considering Flexure hinge length req'd. wall will most likely be shear controlled

ANALYSIS SUMMARY

Project	Fire Station 1
Engineer	DAL
Design code	ACI 318-95
Compression face	North
Time of analysis	1/14/2008 1 33 13 PM

Nominal Moment Resistance, Mn (North-South)

Total area	4 667 ft^2
Centroid from origin (0,0)	24 00 in
Moment of inertia, Ix	129024 0 in^4
Capacity reduction factor, Ø	1 00
Nominal axial load resistance, Pn (Mn=0)	3773 9 Kips
Nominal moment resistance, Mn (Punf=0 0 Kips)	692 8 Kips*ft
Cracking moment, Mcr	260 3 Kips*ft
Distance to N A , c	4 66 in

Degenkolb

Subject. Infill @ 2nd and 3rd Flr		Job Number A7437007	Date 1/2/08
Job Fire Station 1		By DAL	Section
		Checked By	Page of

Determine Dowels into (E) Col to achieve composite action

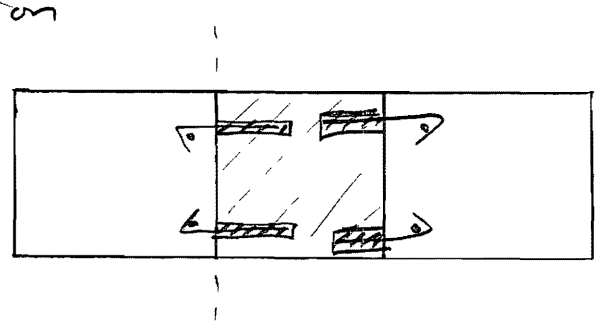

Shear Flow

$q_u = \frac{VQ}{I}$ $\quad V = \frac{170^k}{2} = 85^k$

$I = \frac{(14)(48)^3}{12} = 129024 \text{ in}^4$

$Q = \bar{y}A = \left(\frac{48}{2} - \frac{17}{2}\right)(17)(14) = 3689 \text{ in}^3$

$q_u = 2.4^k/\text{in}$

Use (2) #4 @ 6" O.C. ⇒ Confirm Dowel Action Capacity

$V_{cl} = \frac{(0.6)(60\text{ksi})(0.2\text{in}^2) \times 2}{6''} = 2.4^k/\text{in} = q_u$ ok

Subject	Infill @ 2nd + 3rd Flr	Job Number	A7437007
Job	Fire Station 1	Date	1/2/08
		By	DAL
		Section	
		Checked By	
		Page	of

Shear Friction @ interface w/ spandrel Bm
Consists of following components

- Dowels into top/bottom of Bm (f_{ut} - 75ksi)

  $V_{cL} = 6(75\,ksi)(0.6)(0.31\,in^2) = 84^k$

- Shear friction through Inter or 5/7" of infill

  $V_{cL} = 6(60\,ksi)(0.31\,in^2)(1.4) = \underline{156^k}$

- (E) Col Reinforcing

  $V_{cL} = 4(0.31)(50\,ksi)(1.4) = \underline{87^k}$

Capacity of Shear Plane (Force Controlled)
$V_{cL} = 327^k > V_{LE} = 240^k$ ok

Subject: Infill @ 2nd + 3rd Flr		Job Number: A7437007	Date: 1/14/08
Job: Fire Station 1		By: DAL	Section:
		Checked By:	Page: of

Develope verticle bars w/ dowels into side of spandrel Bms

$V_{UF} = (60\ ksi)(0.31\ in^2) = 18.6^k$

Dowel (3) #5 Adh Dowels into spandrel Bm

$V_{CL} = 3(0.31\ in^2)(75\ ksi \times 0.6) = 42^k > V_{UF}$ ok

Subject Strengthen Wall @ B6		Job Number A7437007	Date 1/11/08
Job Fire Station 1		By DAL	Section
		Checked By	Page of

Demand in Wall

$V_{UD} = 195^k$
$M_{UD} = 1369^{k'}$ } From analysis

Strengthen wall to ensure Elastic response (Minimize Drift for Bay Doors) $V_{sem} = 10$

$V_{cl,conc} = 2\sqrt{4000}\,(7)(120) = 106^k$ (N)

$V_{cl,conc} = 2\sqrt{1200}\,(7)(120) = 58^k$ (E)

$V_{cl,stl} = (0.11 in^2)(60 ksi)\left(\frac{120}{6}\right) = 132^k$ (N)

$V_{cl,stl} = (0.31 in^2)(50 ksi)\left(\frac{120}{14}\right) = 47^k$ (E)

$V_{cl} = 343^k > 195^k$ ok

Considering only (N) portion $V_{cl} = 238^k$

$M_{cl} = 1965^{k'} > M_{UD}$ ok

$M_{bal} = \frac{(343^k)(12.5)}{2} = 2140^{k'}$

Degenkolb

Subject	Strengthen Shear Wall @ B6	**Job Number**	A7437007 00	**Date**	01/17/08
Job	Fire Station 1	**By**	DAL	**Section**	
		Checked By		**Page**	of

STRAIN COMPATIBILITY FOR SHEAR WALLS

GENERAL INFORMATION

This spreadsheet uses limiting concrete strain and a rectangular stress block for ultimate strength

Wall	**Wall 1E2 Upgraded with 7" New concrete behind (E) Wall**
Boundary Steel	**None**
Typical Wall Steel	**#5 @ 14" (E) with #5 @ 12" in new portion of wall**
Load Case	**Lateral Only**

GENERAL PROPERTY DATA

Dimensions

l=	**120**	in
b=	**16**	in
x=	**0**	in
y=	**0**	in
A_g=	1920	in^2
c_g=	**79**	in

Materials

f'_c=	**4**	ksi
f_y=	**60**	ksi
e_{cu}=	**0 003**	
n=	8 0	
β_1=	0 85	

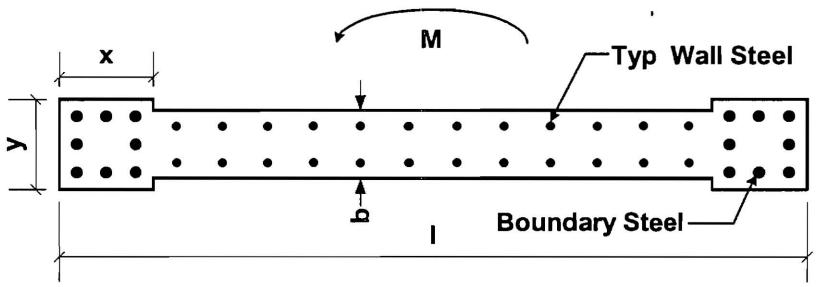

WALL DATA

Insert wall data on next page

STRENGTH ITERATION AND CAPACITIES

Loading

P_u=	**0**	kips
ϕ=	0 90	
P_n=	0	kips

Iteration

c=	**6 504**	in
T=	353 4000	kips
C=	353 4000	kips
Balance=	0 0000	kips

Capacities

M_n=	23578 1	kip-in	1965 kip-ft
ϕM_n=	21220 3	kip-in	1768 kip-ft
ϕP_n=	0	kips	

Degenkolb

Subject	Strengthen Shear Wall @ B6	**Job Number**	A7437007 00	**Date**	01/17/08
Job	Fire Station 1	**By**	DAL	**Section**	
		Checked By		**Page**	**of**

STRAIN COMPATIBILITY FOR SHEAR WALLS

WALL DATA

Layer	A_s (in^2)	y (in)	Strain	Stress (ksi)	Tension (kips)	Compression (kips)	Moment Calculation	
Cz		6 504	-0 003	4 00		300 76		22929
As1	0 62	2	-0 002078	60 00	0 00	35 09	0	2702
As1	0.31	16	0 004380	60 00	18 60	0 00	-1172	0
As1	0 31	30	0 010837	60 00	18 60	0 00	-911	0
As1	0 31	44	0 017294	60 00	18 60	0 00	-651	0
As1	0 31	58	0 023751	60 00	18 60	0 00	-391	0
As1	0 31	72	0 030208	60 00	18 60	0 00	-130	0
As1	0 31	86	0 036666	60 00	18 60	0 00	130	0
As1	0 31	100	0 043123	60 00	18 60	0 00	391	0
As1	0 62	118	0 051425	60 00	37 20	0 00	1451	0
As2	0 31	2	-0 002078	60 00	0 00	17 55	0	1351
As2	0 31	14	0 003457	60 00	18 60	0 00	-1209	0
As2	0.31	26	0 008992	60 00	18 60	0 00	-986	0
As2	0.31	38	0 014527	60 00	18 60	0 00	-763	0
As2	0 31	50	0 020061	60 00	18 60	0 00	-539	0
As2	0.31	62	0 025596	60 00	18 60	0 00	-316	0
As2	0.31	74	0 031131	60 00	18 60	0 00	-93	0
As2	0.31	86	0 036666	60 00	18 60	0 00	130	0
As2	0.31	98	0 042200	60 00	18 60	0 00	353	0
As2	0.31	110	0 047735	60 00	18 60	0 00	577	0
As2	0.31	118	0 051425	60 00	18 60	0 00	725	0
			-0 003000	60 00	0 00	0 00	0	0
			-0 003000	60 00	0 00	0 00	0	0
			-0 003000	60 00	0 00	0 00	0	0
			-0 003000	60 00	0 00	0 00	0	0
			-0 003000	60 00	0 00	0 00	0	0
			-0 003000	60 00	0 00	0 00	0	0
			-0 003000	60 00	0 00	0 00	0	0
			-0 003000	60 00	0 00	0 00	0	0
			-0 003000	60 00	0 00	0 00	0	0
			-0 003000	60 00	0 00	0 00	0	0
			-0 003000	60 00	0 00	0 00	0	0
			-0 003000	60 00	0 00	0 00	0	0
			-0 003000	60 00	0 00	0 00	0	0
			-0 003000	60 00	0 00	0 00	0	0
			-0 003000	60 00	0 00	0 00	0	0
			-0 003000	60 00	0 00	0 00	0	0
			-0 003000	60 00	0 00	0 00	0	0

Subject. Strengthen Wall @ B6		Job Number A7437007	Date 1/11/08
Job Fire Station 1		By DAL	Section
		Checked By	Page of

Shear Capacity

Provide Enough Dowels to transfer 238^k from 2nd Flr Spandrel Bm to (N) Portion of Wall

Provide 3 rows of Dowels @ 12" O.C 9x3 = 27 Dowels

Capacity of Dowels

$V_{CL} = 27(0.31 in^2)(60 ksi)(0.6) = 301^k$

check Need for extra Boundary reinf

$C \approx 6.5''$

$C \geq \frac{120'}{600(0.5/144)} = 58''$

∴ No Boundary reinf req'd

Subject	Strengthen Wall @ B6	Job Number	A7437007
Job	Fire Station 1	Date	1/17/08
		By	DAL
		Section	
		Checked By	
		Page	of

$w = (9/12)(150)(28') + (39psf)(56') = 4\ klf$

Consider footing under (N) Wall

Wall Loads:
$w = 4\ klf$
$M = 1369^{k'}$

length = 10' (removed from rest of wall)

width of footing ≈ 2'

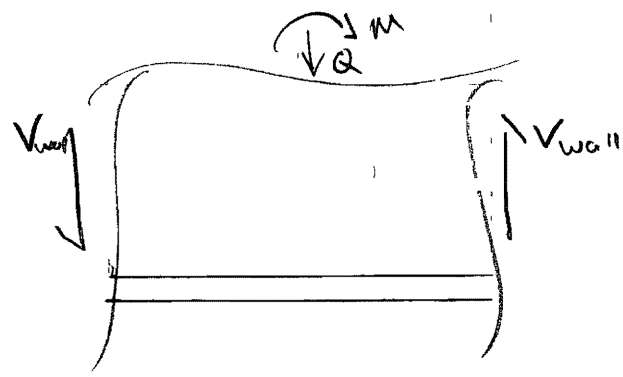

$Q = (4\ klf)(10') = 40^k$
$M = 1369^{k'}$

$e = \frac{1369^{k'}}{40^k} = 34' > \frac{10'}{2} = 5'$

∴ Wall would rock w/o considering continuity of wall

Consider Continuity of Wall

$V_c = 2\sqrt{1200}(14")(120") = 116^k$

$V_{st} = 2(0.2\ in^2)(50\ ksi)\left(\frac{120}{16"}\right) = 133^k$

$V_{wall} = 249^k$

Restoring Moment $= 2490^{k'} > 1369^{k'}$

∴ Wall will Not rock and will shed load to sides

⇒ Design Dowels in Basement to resist this Demand

Subject Strengthen Wall @ B6		Job Number A7437007	Date 1/17/08
Job Fire Station 1		By DAL	Section
		Checked By	Page of

Eccentrically Loaded Dowels from (N) to (E) Wall in Basement
Consider w/ Elastic Methodology (See AISC Manual)

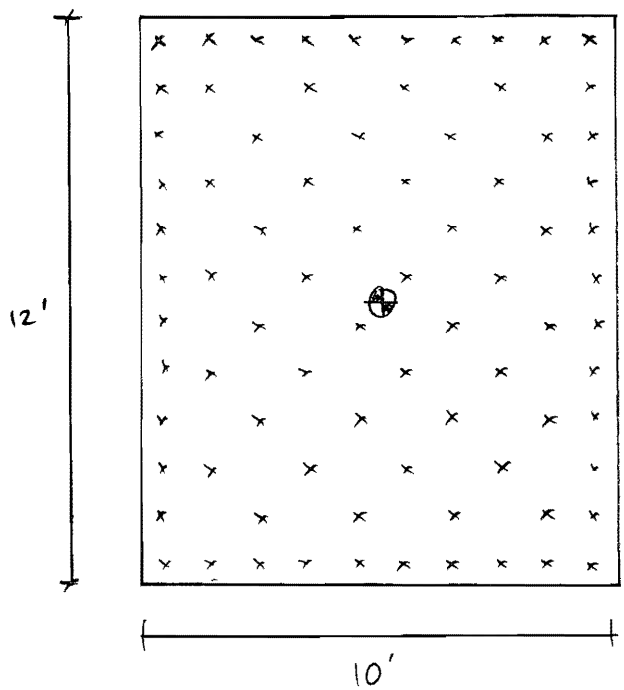

Scale 1/4" = 1'0"

$$\Sigma(x^2+y^2) = [12(4.5')^2 + 7(3.5')^2 + 7(2.5')^2 + 7(1.5')^2 + 7(0.5')^2]\times 2 \quad \text{(columns)}$$
$$+ [10(5.5')^2 + 6(4.5')^2 + 6(3.5')^2 + 6(2.5')^2 + 6(1.5')^2 + 6(0.5')^2]\times 2$$
$$= 780 + 1100 = 1880\ ft^2$$

$M_{ce} = 1250^{k'}$ (New Wall Only) $\Rightarrow V = \frac{1250\times 2}{12.5'} = 200^k$ @ M_{ce}

$n = 10\times 2 + 6\times 10 = 80$

$r_p = \frac{200^k}{80} = 2.5^k$/anchor

$r_{mx} = \frac{(1250^{k'})(5.5')}{1880\ ft^2} = 3.7^k$ $\qquad r_{my} = \frac{(1250^{k'})(4.5')}{1880\ ft^2} = 3^k$

$r_u = [(2.5^k + 3.7^k)^2 + 3^2]^{1/2} = 6.9^k$/anchor Max

$r_{cl} = (0.31\ in^2)(60\ ksi \times 0.6) = 11.2^k > r_u$ ok

Degenkolb

Subject	Strengthen Shear Wall @ B6	**Job Number**	A7437007 00	**Date**	01/17/08
Job	Fire Station 1	**By**	DAL	**Section**	
		Checked By		**Page**	of

STRAIN COMPATIBILITY FOR SHEAR WALLS

GENERAL INFORMATION

This spreadsheet uses limiting concrete strain and a rectangular stress block for ultimate strength

Wall	**Wall 1E2 Upgraded with 7" New concrete ONLY Ignore (E) Wall behind**
Boundary Steel	**None**
Typical Wall Steel	**#5 @ 14" (E) with #5 @ 12" in new portion of wall**
Load Case	**Lateral Only**

GENERAL PROPERTY DATA

Dimensions

l=	**120**	in
b=	**7**	in
x=	**0**	in
y=	**0**	in
A_g=	840	in^2
c_g=	**79**	in

Materials

f'_c=	**6**	ksi
f_y=	**75**	ksi
e_{cu}=	**0 003**	
n=	6 6	
β_1=	0 75	

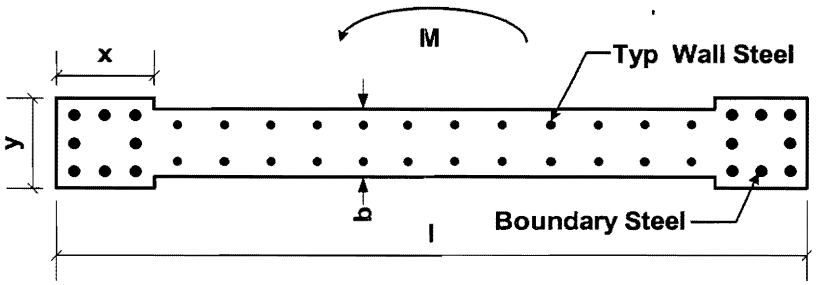

WALL DATA

Insert wall data on next page

STRENGTH ITERATION AND CAPACITIES

Loading

P_u=	**0**	kips
ϕ=	0 90	
P_n=	0	kips

Iteration

c=	**7 896**	in
T=	230 0979	kips
C=	229 9788	kips
Balance=	0 1192	kips

Capacities

M_n=	15010 8	kip-in	1251 kip-ft
ϕM_n=	13509 7	kip-in	1126 kip-ft
ϕP_n=	0	kips	

Subject	Strengthen Shear Wall @ B6	**Job Number**	A7437007 00	**Date**	01/17/08
Job	Fire Station 1	**By**	DAL	**Section**	
		Checked By		**Page**	of

STRAIN COMPATIBILITY FOR SHEAR WALLS

WALL DATA

Layer	A_s (in^2)	y (in)	Strain	Stress (ksi)	Tension (kips)	Compression (kips)	Moment Calculation	
Cz		7 896	-0 003	6 00		211 42		16076
As2	0 31	2	-0 002240	64 96	0 00	18 56	0	1429
As2	0 31	14	0 002319	67 25	20 85	0 00	-1355	0
As2	0 31	26	0 006878	75 00	23 25	0 00	-1232	0
As2	0 31	38	0 011437	75 00	23 25	0 00	-953	0
As2	0 31	50	0 015996	75 00	23 25	0 00	-674	0
As2	0 31	62	0 020556	75 00	23 25	0 00	-395	0
As2	0 31	74	0 025115	75 00	23 25	0 00	-116	0
As2	0 31	86	0 029674	75 00	23 25	0 00	163	0
As2	0 31	98	0 034233	75 00	23 25	0 00	442	0
As2	0.31	110	0 038792	75 00	23 25	0 00	721	0
As2	0 31	118	0 041832	75 00	23 25	0 00	907	0
			-0 003000	75 00	0 00	0 00	0	0
			-0 003000	75 00	0 00	0 00	0	0
			-0 003000	75 00	0 00	0 00	0	0
			-0 003000	75 00	0 00	0 00	0	0
			-0 003000	75 00	0 00	0 00	0	0
			-0 003000	75 00	0 00	0 00	0	0
			-0 003000	75 00	0 00	0 00	0	0
			-0 003000	75 00	0 00	0 00	0	0
			-0 003000	75 00	0 00	0 00	0	0
			-0 003000	75 00	0 00	0 00	0	0
			-0 003000	75 00	0 00	0 00	0	0
			-0 003000	75 00	0 00	0 00	0	0
			-0 003000	75 00	0 00	0 00	0	0
			-0 003000	75 00	0 00	0 00	0	0
			-0 003000	75 00	0 00	0 00	0	0
			-0 003000	75 00	0 00	0 00	0	0
			-0 003000	75 00	0 00	0 00	0	0
			-0 003000	75 00	0 00	0 00	0	0
			-0 003000	75 00	0 00	0 00	0	0
			-0 003000	75 00	0 00	0 00	0	0
			-0 003000	75 00	0 00	0 00	0	0
			-0 003000	75 00	0 00	0 00	0	0
			-0 003000	75 00	0 00	0 00	0	0
			-0 003000	75 00	0 00	0 00	0	0

Degenkolb

Subject: Strengthen Wall @ D6	Job Number A7437007	Date 1/11/08	
Job Fire Station 1	By DAL	Section	
	Checked By	Page	of

Demand in Wall = 192^k

↳ Demand less than Wall B6

∴ ok by Inspection

Subject	Strengthen Shear Wall @ D6	**Job Number**	A7437007 00	**Date**	01/11/08
Job	Fire Station 1	**By**	DAL	**Section**	
		Checked By		**Page**	of

STRAIN COMPATIBILITY FOR SHEAR WALLS

GENERAL INFORMATION

This spreadsheet uses limiting concrete strain and a rectangular stress block for ultimate strength

Wall	**Wall 1E4 Upgraded with 7" New concrete behind (E) Wall**
Boundary Steel	**None**
Typical Wall Steel	**#5 @ 14" (E) with #5 @ 12" in new portion of wall**
Load Case	**Lateral Only**

GENERAL PROPERTY DATA

Dimensions

l=	**120**	in
b=	**7**	in
x=	**0**	in
y=	**0**	in
A_g=	840	in^2
c_g=	**79**	in

Materials

f'_c=	**4**	ksi
f_y=	**60**	ksi
e_{cu}=	**0 003**	
n=	8 0	
β_1=	0 85	

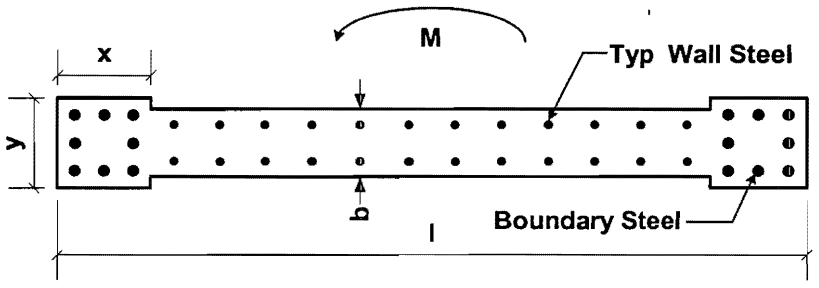

WALL DATA

Insert wall data on next page

STRENGTH ITERATION AND CAPACITIES

Loading

P_u=	**0**	kips
ϕ=	0 90	
P_n=	0	kips

Iteration

c=	**13 356**	in
T=	322 8378	kips
C=	322 8377	kips
Balance=	0 0001	kips

Capacities

M_n=	22421 3	kip-in	1868 kip-ft
ϕM_n=	20179 2	kip-in	1682 kip-ft
ϕP_n=	0	kips	

Degenkolb

Subject	Strengthen Shear Wall @ D6	**Job Number**	A7437007 00	**Date**	01/11/08
Job	Fire Station 1	**By**	DAL	**Section**	
		Checked By		**Page**	of

STRAIN COMPATIBILITY FOR SHEAR WALLS

WALL DATA

Layer	A_s (in^2)	y (in)	Strain	Stress (ksi)	Tension (kips)	Compression (kips)	Moment Calculation	
Cz		13 356	-0 003	4 00		270 20		19812
As1	0 62	2	-0 002551	60 00	0 00	35 09	0	2702
As1	0 31	16	0 000594	17 22	5 34	0 00	-336	0
As1	0.31	30	0 003738	60 00	18 60	0 00	-911	0
As1	0.31	44	0 006883	60 00	18 60	0 00	-651	0
As1	0.31	58	0 010027	60 00	18 60	0 00	-391	0
As1	0.31	72	0 013172	60 00	18 60	0 00	-130	0
As1	0 31	86	0 016317	60 00	18 60	0 00	130	0
As1	0 31	100	0 019461	60 00	18 60	0 00	391	0
As1	0 62	118	0 023504	60 00	37 20	0 00	1451	0
As2	0 31	2	-0 002551	60 00	0 00	17 55	0	1351
As2	0 31	14	0 000145	4 19	1 30	0 00	-84	0
As2	0 31	26	0 002840	60 00	18 60	0 00	-986	0
As2	0 31	38	0 005535	60 00	18 60	0 00	-763	0
As2	0.31	50	0 008231	60 00	18 60	0 00	-539	0
As2	0 31	62	0 010926	60 00	18 60	0 00	-316	0
As2	0 31	74	0 013621	60 00	18 60	0 00	-93	0
As2	0.31	86	0 016317	60 00	18 60	0 00	130	0
As2	0 31	98	0 019012	60 00	18 60	0 00	353	0
As2	0.31	110	0 021707	60 00	18 60	0 00	577	0
As2	0 31	118	0 023504	60 00	18 60	0 00	725	0
			-0 003000	60 00	0 00	0 00	0	0
			-0 003000	60 00	0 00	0 00	0	0
			-0 003000	60 00	0 00	0 00	0	0
			-0 003000	60 00	0 00	0 00	0	0
			-0 003000	60 00	0 00	0 00	0	0
			-0 003000	60 00	0 00	0 00	0	0
			-0 003000	60 00	0 00	0 00	0	0
			-0 003000	60 00	0 00	0 00	0	0
			-0 003000	60 00	0 00	0 00	0	0
			-0 003000	60 00	0 00	0 00	0	0
			-0 003000	60 00	0 00	0 00	0	0
			-0 003000	60 00	0 00	0 00	0	0
			-0 003000	60 00	0 00	0 00	0	0
			-0 003000	60 00	0 00	0 00	0	0
			-0 003000	60 00	0 00	0 00	0	0
			-0 003000	60 00	0 00	0 00	0	0
			-0 003000	60 00	0 00	0 00	0	0

Degenkolb

Subject. Strengthen Wall @ J6	Job Number A7437007	Date 1/11/08	
Job Fire Station 1	By DAL	Section	
	Checked By	Page	of

Demand in Wall

$V_{UD} = 199^k$

$M_{UD} = 1219^{k'}$ $M_{cl} = 3124^{k'}$

ok by Inspection

Degenkolb

Subject	Strengthen Shear Wall @ J6	**Job Number**	A7437007 00	**Date**	01/11/08
Job	Fire Station 1	**By**	DAL	**Section**	
		Checked By		**Page**	of

STRAIN COMPATIBILITY FOR SHEAR WALLS

GENERAL INFORMATION

This spreadsheet uses limiting concrete strain and a rectangular stress block for ultimate strength

Wall	**Wall 1E9 Upgraded with 7" New concrete behind (E) Wall**
Boundary Steel	**None**
Typical Wall Steel	**#5 @ 14" (E) with #5 @ 12" in new portion of wall**
Load Case	**Lateral Only**

GENERAL PROPERTY DATA

Dimensions

l=	**156**	in
b=	**7**	in
x=	**0**	in
y=	**0**	in
A_g=	1092	in^2
c_g=	**79**	in

Materials

f'_c=	**4**	ksi
f_y=	**60**	ksi
e_{cu}=	**0 003**	
n=	8 0	
β_1=	0 85	

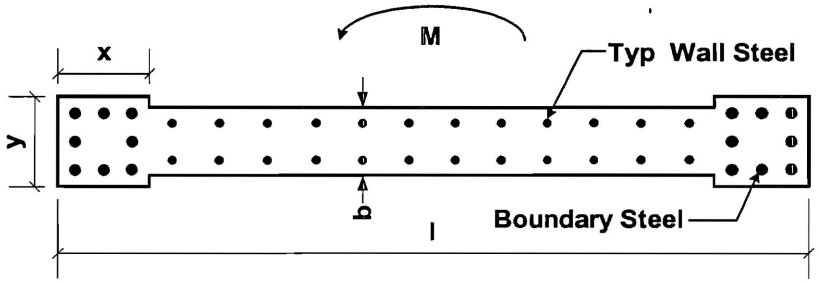

WALL DATA

Insert wall data on next page

STRENGTH ITERATION AND CAPACITIES

Loading

P_u=	**0**	kips
ϕ=	0 90	
P_n=	0	kips

Iteration

c=	**17 820**	in
T=	421 4142	kips
C=	420 6186	kips
Balance=	0 7956	kips

Capacities

M_n=	37484 3	kip-in	3124 kip-ft
ϕM_n=	33735 9	kip-in	2811 kip-ft
ϕP_n=	0	kips	

Degenkolb

Subject	Strengthen Shear Wall @ J6	**Job Number**	A7437007 00	**Date**	01/11/08
Job	Fire Station 1	**By**	DAL	**Section**	
		Checked By		**Page**	**of**

STRAIN COMPATIBILITY FOR SHEAR WALLS

WALL DATA

Layer	A_s (in^2)	y (in)	Strain	Stress (ksi)	Tension (kips)	Compression (kips)	Moment Calculation	
Cz		17 820	-0 003	4 00		360 50		25749
As1	0 62	2	-0 002663	60 00	0 00	35 09	0	2702
As1	0 31	16	-0 000306	8 89	0 00	2 75	0	174
As1	0 31	30	0 002051	59 46	18 43	0 00	-903	0
As1	0 31	44	0 004407	60 00	18 60	0 00	-651	0
As1	0 31	58	0 006764	60 00	18 60	0 00	-391	0
As1	0 31	72	0 009121	60 00	18 60	0 00	-130	0
As1	0 31	86	0 011478	60 00	18 60	0 00	130	0
As1	0 31	100	0 013835	60 00	18 60	0 00	391	0
As1	0.31	114	0 016192	60 00	18 60	0 00	651	0
As1	0 31	128	0 018549	60 00	18 60	0 00	911	0
As1	0.31	142	0 020906	60 00	18 60	0 00	1172	0
As1	0 62	156	0 023263	60 00	37 20	0 00	2864	0
As2	0 31	2	-0 002663	60 00	0 00	17 55	0	1351
As2	0 31	14	-0 000643	18 65	0 00	4 73	0	307
As2	0 31	26	0 001377	39 94	12 38	0 00	-656	0
As2	0 31	38	0 003397	60 00	18 60	0 00	-763	0
As2	0.31	50	0 005418	60 00	18 60	0 00	-539	0
As2	0 31	62	0 007438	60 00	18 60	0 00	-316	0
As2	0 31	74	0 009458	60 00	18 60	0 00	-93	0
As2	0.31	86	0 011478	60 00	18 60	0 00	130	0
As2	0 31	98	0 013498	60 00	18 60	0 00	353	0
As2	0 31	110	0 015519	60 00	18 60	0 00	577	0
As2	0.31	122	0 017539	60 00	18 60	0 00	800	0
As2	0.31	134	0 019559	60 00	18 60	0 00	1023	0
As2	0.31	146	0 021579	60 00	18 60	0 00	1246	0
As2	0.31	154	0 022926	60 00	18 60	0 00	1395	0
			-0 003000	60 00	0 00	0 00	0	0
			-0 003000	60 00	0 00	0 00	0	0
			-0 003000	60 00	0 00	0 00	0	0
			-0 003000	60 00	0 00	0 00	0	0
			-0 003000	60 00	0 00	0 00	0	0
			-0 003000	60 00	0 00	0 00	0	0
			-0 003000	60 00	0 00	0 00	0	0
			-0 003000	60 00	0 00	0 00	0	0
			-0 003000	60 00	0 00	0 00	0	0
			-0 003000	60 00	0 00	0 00	0	0
			-0 003000	60 00	0 00	0 00	0	0

Subject	Strengthen Wall @ H1	Job Number	A7437007
Job	Fire Station 1	By	DAL
		Checked By	
Date	1/16/08	Section	
Page	of		

Demand in Wall

$V_{UD} = 170^k$
$M_{UD} = 1027^{k'}$ } From Analysis

Strengthen Stiffen Wall same as @ B6

$V_{cl,conc} = 2\sqrt{4000}\,(7)(88'') = 78^k$
$V_{cl,stl} = (0.11\,in^2)(60\,ksi)\left(\frac{88}{6}\right) = 97^k$ } New Portion

$V_{cl,conc} = 2\sqrt{1200}\,(9)(88'') = 55^k$
$V_{cl,stl} = (0.31\,in^2)(50\,ksi)\left(\frac{73''}{14'}\right) = 81^k$ } Existing Portion

$V_{cl} = 311^k > 170^k$ ok

Considering (N) only $V_{cl} = 175^k$

$M_{cl} = 1222^{k'} > M_{UD}$ ok

$M_{bal} = \frac{(311^k)(12.5')}{2} = 1943^{k'}$

Degenkolb

Subject	Strengthen Shear Wall @ H1	**Job Number**	A7437007 00	**Date**	01/16/08
Job	Fire Station 1	**By**	DAL	**Section**	
		Checked By		**Page**	of

STRAIN COMPATIBILITY FOR SHEAR WALLS

GENERAL INFORMATION

This spreadsheet uses limiting concrete strain and a rectangular stress block for ultimate strength

Wall	**Wall 1W3 Upgraded with 7" New concrete behind (E) Wall**
Boundary Steel	**None**
Typical Wall Steel	**#5 @ 14" (E) with #5 @ 12" in new portion of wall**
Load Case	**Lateral Only**

GENERAL PROPERTY DATA

Dimensions

l=	**88**	in
b=	**7**	in
x=	**0**	in
y=	**0**	in
A_g=	616	in^2
c_g=	**79**	in

Materials

f'_c=	**4**	ksi
f_y=	**60**	ksi
e_{cu}=	**0 003**	
n=	8 0	
β_1=	0 85	

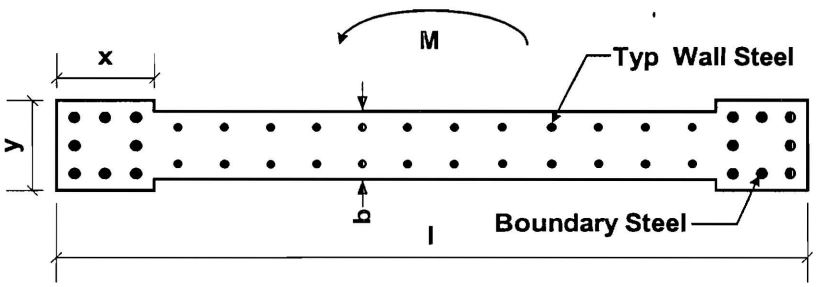

WALL DATA

Insert wall data on next page

STRENGTH ITERATION AND CAPACITIES

Loading

P_u=	**0**	kips
ϕ=	0 90	
P_n=	0	kips

Iteration

c=	**10 493**	in
T=	264 9653	kips
C=	264 9202	kips
Balance=	0 0451	kips

Capacities

M_n=	14660 7	kip-in	1222 kip-ft
ϕM_n=	13194 6	kip-in	1100 kip-ft
ϕP_n=	0	kips	

Degenkolb

Subject	Strengthen Shear Wall @ H1	Job Number	A7437007 00	Date	01/16/08
Job	Fire Station 1	By	DAL	Section	
		Checked By		Page	of

STRAIN COMPATIBILITY FOR SHEAR WALLS

WALL DATA

Layer	A_s (in^2)	y (in)	Strain	Stress (ksi)	Tension (kips)	Compression (kips)	Moment Calculation	
Cz		10 493	-0 003	4 00		212 28		15824
As1	0 62	2	-0 002428	60 00	0 00	35 09	0	2702
As1	0 31	16	0 001574	45 65	14 15	0 00	-892	0
As1	0 31	30	0 005577	60 00	18 60	0 00	-911	0
As1	0 31	44	0 009579	60 00	18 60	0 00	-651	0
As1	0 31	58	0 013582	60 00	18 60	0 00	-391	0
As1	0 31	72	0 017584	60 00	18 60	0 00	-130	0
As1	0 31	86	0 021587	60 00	18 60	0 00	130	0
As1	0 62	100	0 025589	60 00	37 20	0 00	781	0
As2	0 31	2	-0 002428	60 00	0 00	17 55	0	1351
As2	0 31	14	0 001003	29 07	9 01	0 00	-586	0
As2	0 31	26	0 004433	60 00	18 60	0 00	-986	0
As2	0.31	38	0 007864	60 00	18 60	0 00	-763	0
As2	0.31	50	0 011295	60 00	18 60	0 00	-539	0
As2	0 31	62	0 014725	60 00	18 60	0 00	-316	0
As2	0 31	74	0 018156	60 00	18 60	0 00	-93	0
As2	0 31	86	0 021587	60 00	18 60	0 00	130	0
			-0 003000	60 00	0 00	0 00	0	0
			-0 003000	60 00	0 00	0 00	0	0
			-0 003000	60 00	0 00	0 00	0	0
			-0 003000	60 00	0 00	0 00	0	0
			-0 003000	60 00	0 00	0 00	0	0
			-0 003000	60 00	0 00	0 00	0	0
			-0 003000	60 00	0 00	0 00	0	0
			-0 003000	60 00	0 00	0 00	0	0
			-0 003000	60 00	0 00	0 00	0	0
			-0 003000	60 00	0 00	0 00	0	0
			-0 003000	60 00	0 00	0 00	0	0
			-0 003000	60 00	0 00	0 00	0	0
			-0 003000	60 00	0 00	0 00	0	0
			-0 003000	60 00	0 00	0 00	0	0
			-0 003000	60 00	0 00	0 00	0	0
			-0 003000	60 00	0 00	0 00	0	0
			-0 003000	60 00	0 00	0 00	0	0
			-0 003000	60 00	0 00	0 00	0	0
			-0 003000	60 00	0 00	0 00	0	0
			-0 003000	60 00	0 00	0 00	0	0

Degenkolb

Subject Strengthen Wall @ H1		Job Number A74137007	Date 1/16/08
Job Fire Station 1		By DAL	Section
		Checked By	Page of

Provide Dowels from 2nd Flr to transfer 175k into (N) Portion of Wall

Provide 3 rows @ 12" O.C. 6×3 = 18 Dowels

$V_{cL} = 18(0.31 in^2)(60 \times 0.6) = 201^k > 175^k$ ok

Dowels in Basement ok by Inspection

Check Need for Boundary Reinf

$c \approx 10.5''$

$c \geq \frac{58''}{600(0.5/144)} = 42''$

No Boundary Reinf Req'd

Subject. New Wall Gr dline C		Job Number A7437007	Date 1/21/08
Job Fire Station 1		By DAL	Section
		Checked By	Page of

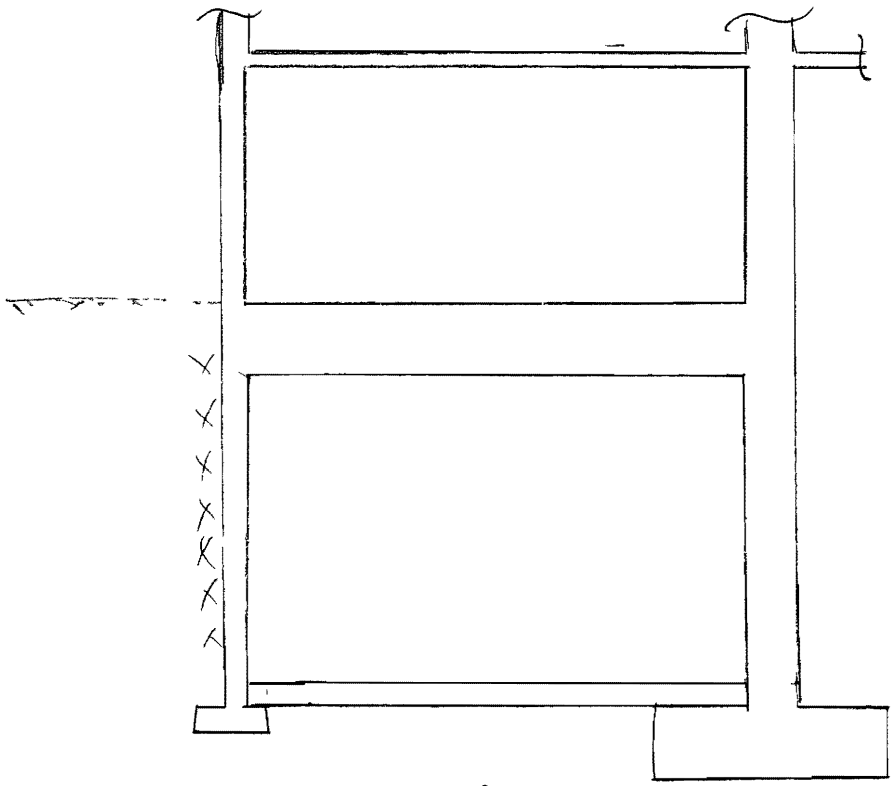

Demands in Wall

$V_{UD} = 420^k$, $M_{UD} = 740^{k'}$ } @ 1st Flr

$V_{UD} = 270^k$, $M_{UD} = 5600^{k'}$ } @ Bsmnt

From Analysis

Consider Overturning of Wall

DL in Column

load Tributary Area $(10')(16') + (20')(15') = 460$ sq ft

Average Flr Load $= (60psf)(460 sq ft) = 27.6^k$

DL in Col $= 27.6^k \times 4 = 110^k$ @ 1st Flr

DL of footing $= (0.15)(9.5')^2(3.2') = 43^k$

Check Global Stability

$M_{OT} = 5600^{k'}$

$M_{ST} = 0.9(153^k)(23') = 3170^{k'}$ } Where $R_{OT} = 4$ for TO

$M_{ST} < \frac{5600^{k'}}{4} = 1400^{k'}$ ∴ Wall will Rock w/in acceptable limits

Subject New Wall Gridline C	Job Number A7437007	Date 1/21/07	
Job Fire Station 1	By DAL	Section	
	Checked By	Page	of

- Check Column Rebar to pick up footing

$A_s = 11(0.79 in^2) = 8.7 in^2$

$l_s = \frac{5'4''}{2} = 32''$

$l_{s,\,req'd} = \frac{(50{,}000)(1.0)}{20\sqrt{2300}} = 52 d_b = 52''$

Effective Capacity

$F_t = (50ksi)\left(\frac{32}{52}\right)(8.7 in^2) = 26.8^k > 4.3^k$ DL of footing

ok

∴ Wall will pick up footing and Col when loaded to the West Wall Cannot pick up (E) Wall @ West Side when loaded to the East. Must Dowel (N) Wall to (E) Wall to develop (N) Wall Capacity.

Degenkolb

Subject New Wall Grid C	Job Number A7437007	Date 1/21/08	
Job Fire Station 1	By DAL	Section	
	Checked By	Page	of

- Dowel (N) Wall to (E) structure

Dowels @ (E) Col/Wall @ ends of (N) Wall

$V_{UF} = \frac{6240^{k'}}{23'} = 270^k$

Dowels Req'd $= \frac{270^k}{(0.31)(90)(0.6)} = 16$ Dowels

∴ Put Dowels @ 6" O.C @ ends of Wall
= 2(12') = 24 dowels

Dowels @ (N) Wall to 1st Flr/ Footing

Shear @ $M_{CE} = 6240^{k'}$

$V_{UF} = \frac{6240^{k'}}{12'} = 520^k$

Dowels Req'd $= \frac{520^k}{(0.31)(90)(0.6)} = 31$

∴ Put Dowels @ 6" O.C top and Bottom
= 2(23) = 46 Dowels

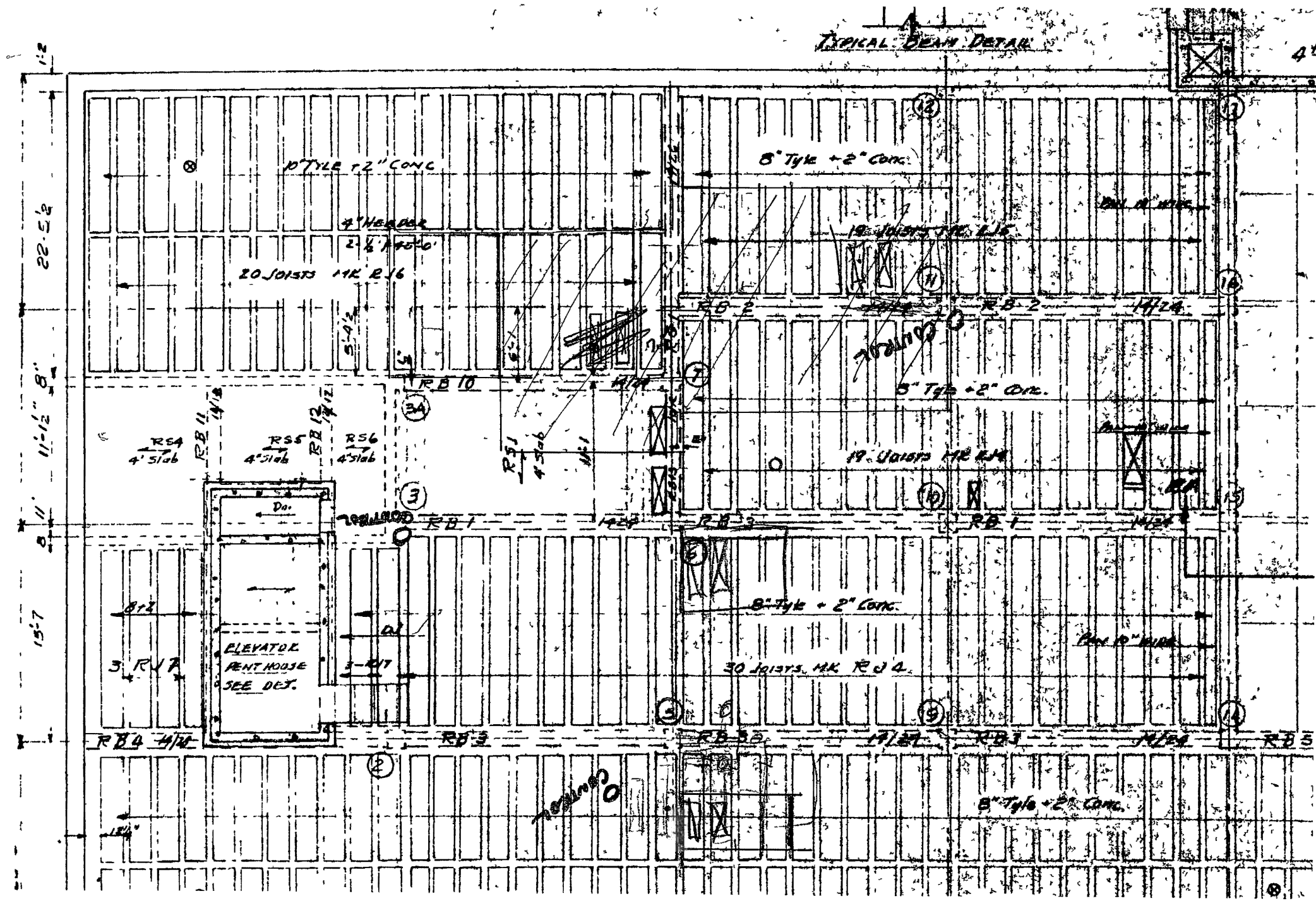
TYPICAL BEAM DETAIL
10" TYLE + 2" CONC
8" Tyle + 2" Conc.
4" HEADER
20 JOISTS MK RJ6
19 JOISTS MK RJ5
RB 2
RB 10
RB 11
RB 12
RS4
4" Slab
RS5
4" Slab
RS6
4" Slab
RS1
4" Slab
RB 1
RB 3
RB 4
RB 5
ELEVATOR
PENTHOUSE
SEE DET.
30 JOISTS MK RJ4
8" Tyle + 2" Conc.
22'-5½"
11'-1½"
15'-7

Degenkolb

Subject New Wall Grid C	Job Number A7437007	Date 1/24/08	
Job Fire Station 1	By DAL	Section	
	Checked By	Page	of

Wall Demands

Gravity Live Load = (100psf)(12') = 1.2 klf 2nd Flr
(100psf)(4') = 0.4 klf 1st Flr

Dead Load = (45psf)(12') = 0.54 klf 2nd Flr
$\frac{(16)(30)}{144}\frac{(150pcf)}{1000\#}$ = 0.5 klf 1st Flr

Wall DL = $\frac{(150pcf)(12'+16')(8/12)}{1000\#}$ = 2.8 klf

Seismic V_{UD} = 270k
M_{UD} = 5600k' } From Analysis

Try 8" Wall w/ #5 @ 12" O.C. Horiz + Vert

$V_{ce,conc} = 3\sqrt{6000}(8)(270") = 502^k$
$V_{ce,stl} = (75ksi)(0.31in^2)\left(\frac{270}{12}\right) = 523^k$

$V_{ce} = 1025^k$

$M_{ce} = 6240^{k'}$

$M_{bal} = \frac{(1025^k)(12.5')}{2} = 6400^{k'}$

Degenkolb

Subject	Add new wall in Basement	**Job Number**	A7437007 00	**Date**	01/21/08
Job	Fire Station 1	**By**	DAL	**Section**	
		Checked By		**Page**	**of**

STRAIN COMPATIBILITY FOR SHEAR WALLS

GENERAL INFORMATION

This spreadsheet uses limiting concrete strain and a rectangular stress block for ultimate strength

Wall	**Wall 016**
Boundary Steel	**None**
Typical Wall Steel	**#5 @ 12"**
Load Case	**0 9 Dead plus E**

GENERAL PROPERTY DATA

Dimensions

l=	**270**	in
b=	**10**	in
x=	**0**	in
y=	**0**	in
A_g=	2700	in^2
c_g=	**79**	in

Materials

f'_c=	**6**	ksi
f_y=	**75**	ksi
e_{cu}=	**0 003**	
n=	6 6	
β_1=	0 75	

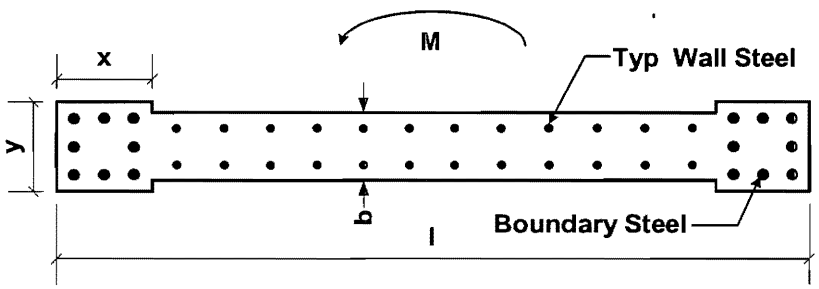

WALL DATA

Insert wall data on next page

STRENGTH ITERATION AND CAPACITIES

Loading

P_u=	**75**	kips
ϕ=	0 89	
P_n=	84	kips

Iteration

c=	**14 335**	in
T=	571 1454	kips
C=	570 5800	kips
Balance=	0 5654	kips

Capacities

M_n=	74858	kip-in	6238 kip-ft
ϕM_n=	66679 1	kip-in	5557 kip-ft
ϕP_n=	75	kips	

WALL DATA

Stress **Compression**

Degenkolb

Subject	Add new wall in Basement	**Job Number**	A7437007 00	**Date**	01/21/08
Job	Fire Station 1	**By**	DAL	**Section**	
		Checked By		**Page**	of

STRAIN COMPATIBILITY FOR SHEAR WALLS

Layer	A_s (in^2)	y (in)	Strain	(ksi)	Tension (kips)	(kips)	Moment Calculation	
Cz		14 335	-0 003	6 00		548 32		40370
As1	0 31	2	-0 002581	74 86	0 00	21 63	0	1665
As1	0 31	14	-0 000070	2 03	0 00	0 63	0	41
As1	0 31	26	0 002441	70 79	21 95	0 00	-1163	0
As1	0 31	38	0 004952	75 00	23 25	0 00	-953	0
As1	0 31	50	0 007464	75 00	23 25	0 00	-674	0
As1	0 31	62	0 009975	75 00	23 25	0 00	-395	0
As1	0 31	74	0 012486	75 00	23 25	0 00	-116	0
As1	0 31	86	0 014998	75 00	23 25	0 00	163	0
As1	0 31	98	0 017509	75 00	23 25	0 00	442	0
As1	0 31	110	0 020020	75 00	23 25	0 00	721	0
As1	0 31	122	0 022531	75 00	23 25	0 00	1000	0
As1	0 31	134	0 025043	75 00	23 25	0 00	1279	0
As1	0 31	146	0 027554	75 00	23 25	0 00	1558	0
As1	0 31	158	0 030065	75 00	23 25	0 00	1837	0
As1	0 31	170	0 032577	75 00	23 25	0 00	2116	0
As1	0 31	182	0 035088	75 00	23 25	0 00	2395	0
As1	0 31	194	0 037599	75 00	23 25	0 00	2674	0
As1	0 31	206	0 040111	75 00	23 25	0 00	2953	0
As1	0 31	218	0 042622	75 00	23 25	0 00	3232	0
As1	0 31	230	0 045133	75 00	23 25	0 00	3511	0
As1	0.31	242	0 047644	75 00	23 25	0 00	3790	0
As1	0.31	254	0 050156	75 00	23 25	0 00	4069	0
As1	0 31	266	0 052667	75 00	23 25	0 00	4348	0
			-0 003000	75 00	0 00	0 00	0	0
			-0 003000	75 00	0 00	0 00	0	0
			-0 003000	75 00	0 00	0 00	0	0
			-0 003000	75 00	0 00	0 00	0	0
			-0 003000	75 00	0 00	0 00	0	0
			-0 003000	75 00	0 00	0 00	0	0
			-0 003000	75 00	0 00	0 00	0	0
			-0 003000	75 00	0 00	0 00	0	0
			-0 003000	75 00	0 00	0 00	0	0
			-0 003000	75 00	0 00	0 00	0	0
			-0 003000	75 00	0 00	0 00	0	0
			-0 003000	75 00	0 00	0 00	0	0
			-0 003000	75 00	0 00	0 00	0	0
			-0 003000	75 00	0 00	0 00	0	0

Subject New Wall Grid C		Job Number A7437007	Date 1/23/08
Job Fire Station 1		By DAL	Section
		Checked By	Page of

Footing Design

Using presumtive soil capacities
lower bound = 2 ksf
expected = 3 ksf

Load on footing

$12(38\ klf) + 16(16\ klf) = 72\ klf$

width Req'd $= \frac{7200\ plf}{2000\ psf} = 3.6'$

use width $= 4' > 3.6'$ ok

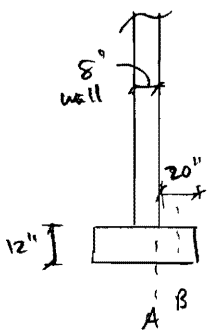

Moment and Shear Demands

$M_u @ A = (3\ ksf)(\frac{20''}{12})(1')(\frac{20/12}{2}) = 42^{k'}$ per foot

$V_u @ B = (3\ ksf)(\frac{20-6}{12})(1') = 3.5^k$

Moment and Shear Capacities

$\phi V_c = (0.75)(2\sqrt{4000})(12)(12) = 13.7^k > V_u$ ok

Try #4 @ 12" OC EW T+B (ignore comp steel)

$a = \frac{(0.2\ in^2)(60\ ksi)}{0.85(4\ ksi)(12'')} = 0.3''$

$\phi M_n = (0.2\ in^2)(60\ ksi)(9 - \frac{0.3}{2}) = 106^{k''} = 8.9^{k'} > M_u$ ok

Degenkolb

Subject: E/W Tower Demands	Job Number A7437007	Date 11/23/07	
Job Fire Station 1	By DAL	Section	
	Checked By	Page	of

North Side tower Wall

Above Bldg Roof	372k	323k	to be transfered out of Tower
Btwn Bldg Roof @ 4th Flr tow	49k	71k	to be transfered into tower
Btwn 3rd + 4th Flr	120k		
Btwn 2nd + 3rd Flr	219k	99k	into tower
Btwn 1st + 2nd Flr	255k	36k	into tower

Note Load to be transfered into tower are conservative b/c mass @ tower diaphragm ignored

Degenkolb

Subject. Tower / Bldg Tie		Job Number A7437007	Date 1/28/08
Job Fire Station 1		By DAL	Section
		Checked By	Page of

Demand btwn Tower and Bldg @ Roof
(from Analysis)

Demand = 323^k

Design connection of tower and building as Fuse

Use $m = 30$ for fuse

$\therefore$ Design Fuse for $\frac{323^k}{30} = 108^k$

and Design rest of elements in load path for overstrength of Fuse

AISC 341-05 $R_y = 1.2$ for 50 ksi steel

$F_{ye} = (50\,ksi)(1.1) = 55\,ksi$

$A_{req'd} = \frac{108^k}{55\,ksi} = 1.97\,in^2$

Use 2"x1" fuse $A_g = 2\,in^2$

Overstrength of fuse $= (55\,ksi)(1.2)(2\,in^2) = \underline{\underline{132^k}}$

Subject. Tower/Bldg Tie		Job Number A7437007	Date 1/28/08
Job Fire Station 1		By DAL	Section
		Checked By	Page of

Design Dogbone Fuse

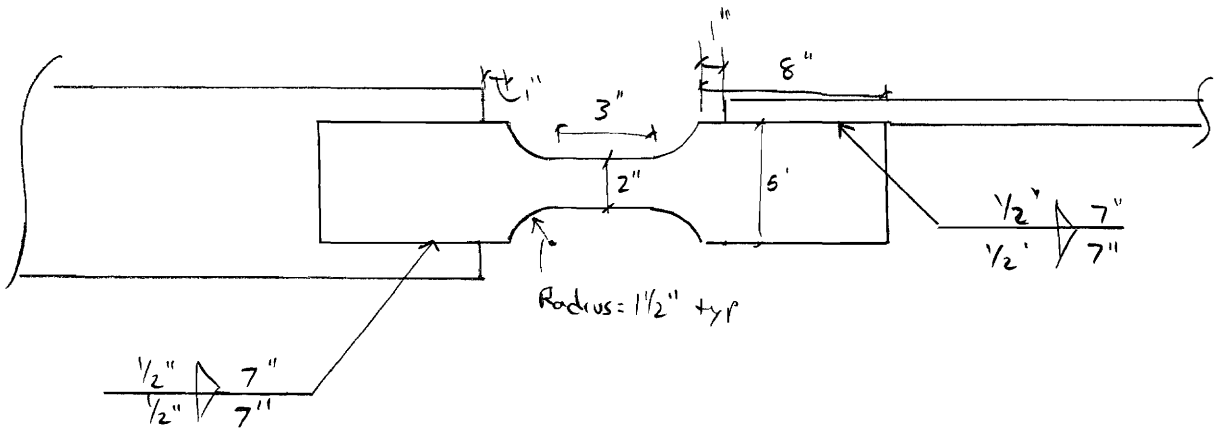

Consider weld Group on right ⇒ eccentric loading

$R_n = C C_1 D \ell$

$a = \frac{e}{\ell} = \frac{2.5''}{7''} = 0.35''$

$k = 0$

$\therefore C = 7.875$ (Table 8-41 AISC 13)

$C_1 = 1.0 \quad D = 8'' \quad \ell = 7''$

$R_n = 161^k > 132^k$ ok

Check Net Section

$A_e = (5 in^2)(1 - \frac{2.5}{7}) = 3.2 in^2$

$T_n = (58 ksi)(3.2 in^2) = 186^k > 132^k$ ok

Subject	Tower / Bldg Tie	Job Number	A7437007
Job	Fire Station 1	Date	1/28/08
		By	DAL
		Section	
		Checked By	
		Page	of

Check Buckling of Fuse

Assume $l_e = 0.5(8'') = 4''$

$A = (1'')(2'') = 2\,in^2$ (ignore larger portions)

$\frac{Kl}{r} = \frac{4''}{0.288} = 14 \le 4.71\sqrt{\frac{E}{F_y}} = 113$

$F_e = \frac{\pi^2 E}{\left(\frac{Kl}{r}\right)^2} = 1484$ ksi

$P_{Buckle} = (1484)(2in^2) = 2968^k > 132^k$

$F_{cr} = (0.658^{\frac{F_y}{F_e}})F_y = 54.2$ ksi

54.2 ksi ≈ 55 ksi

- Doghone won't Buckle ok

Degenkolb

Subject: Tower/Blds Tie	Job Number A7437007	Date 1/30/08	
Job Fire Station 1	By DAL	Section	
	Checked By	Page	of

Check Buckling of Entire Connection assuming entire length of member is 1"x2" pl ⇒ conservative

Determine critical Buckling length

$$P_{cr} = \frac{\pi^2 E A}{\left(\frac{k\ell}{r}\right)^2} \qquad r = \sqrt{\frac{I}{A}} = \sqrt{\frac{0.167}{2}} = 0.289$$

$$k = 0.5 \qquad A = 2 in^2 \qquad P_{cr} = 132^k$$

$$\frac{k\ell}{r} = \frac{\pi^2 E A}{P_{cr}}$$

$$\ell = \left(\frac{\pi^2 E A}{P_{cr}}\right)^{1/2} \frac{r}{k} \Rightarrow \ell_{max} = 38''$$

Distance from shear stud to Embed in Wall

$D = 8 \times 3 + 6 + 6'' = 36'' < 38''$ ok

Degenkolb

Subject. Tower/Bldg Tie		Job Number A7437007	Date 1/30/08
Job Fire Station 1		By DAL	Section
		Checked By	Page of

Collector/Drag Plate in Building

Space Anchors/Shear studs 12" Max

$A_{s\,req'd} = \frac{132^k}{49ksi} = 2.7in^2$

Try PL ~~1/2~~ 5/8" × 6"

Check Buckling

$r = \sqrt{\frac{I}{A}} = \left(\frac{\cancel{0.0625}\ 0.122}{3in^2}\right)^{1/2} = \cancel{0.144}\ 0.18$

$\frac{KL}{r} = \frac{(0.5)(12")}{\cancel{0.144}\ 0.18} = \cancel{41.7}\ 33.3 < 4.71\sqrt{\frac{E}{F_y}} = 113$

$F_e = \frac{\pi^2 E}{\left(\frac{KL}{r}\right)^2} = \cancel{165}\ 258\ ksi$

$F_{cr} = (0.658^{F_y/F_e})F_y = \cancel{43.3}\ 45.2\ ksi$

$P_n = (\cancel{43.3}\ 45.2\ ksi)(\cancel{3}\ 3.75\ in^2) = \cancel{130}\ 170^k > 132^k$ ok

Degenkolb

Subject Tower / Bldg Tie		Job Number A7437007	Date 1/30/08
Job Fire Station 1		By DAL	Section
		Checked By	Page of

Collectors in Tower

A_s req'd $= \frac{132^k}{49 ksi} = 2.7 in^2$

Try MC 6x12

Check Buckling for 4' unbraced length to span across window

$\frac{Kl}{r} = \frac{(0.5)(48")}{0.724} = 33 < 4.71\sqrt{\frac{E}{F_y}} = 113$

$F_e = \frac{\pi^2 E}{\left(\frac{Kl}{r}\right)^2} = 263$ ksi

$F_{cr} = (0.658)^{49/263}(49) = 45.3$ ksi

$P_n = (45.3 ksi)(3.53 in^2) = 160^k > 132^k$ ok

Degenkolb

Subject. Tower/Bldg Tie	Job Number	Date 1/29/08	
Job	By	Section	
	Checked By	Page	of

8" available

3/4"Ø KB-TZ anchor to (E) Drill tower Wall

(E) Wall Thickness = 8"

Failure Modes

- Concrete Breakout
- Concrete Pryout
- Steel Strength

Check Concrete Breakout 3 ways
1) Group Mechanism
2) Single Anchor
3) Sheer Friction of failure plane req'd for Mechanism

Check concrete Pryout + Steel strength for single anchor and let this govern spacing requirements

Subject Tower / Bldg Tie		Job Number A7437007	Date 1/29/08
Job Fire Station 1		By DAL	Section
		Checked By	Page of

Concrete Pryout

$V_{cp} = k_{cp} N_{cb}$ $\qquad k_{cp} = 2.0$

$N_{cb} = \frac{A_{Nc}}{A_{Nco}} \psi_{ed} \psi_c \psi_{cp} N_b$

$A_{Nc} = A_{Nco} = 9(4.75)^2 = 203 in^2$ $\qquad s_{min} = 15(4\frac{3}{4}") = 71"$

$\psi_{ed} = 1.0$

$\psi_c = 1.0$

$\psi_{cp} = 1.0 \Rightarrow c_{ac} = c_{min} = 9"$

$N_b = 17\sqrt{1200}\,(4.75")^{1.5} = 6.1^k/anchor$

D 3.33 => 0.75 V_n

$\therefore V_{cp} = 0.75(2 \times 6.1) = 9.2^k/anchor$

Steel Strength

$V_{sa} = 14.2^k/anchor > V_{cp} \Rightarrow V_{cp}$ governs

- Determine length of collector based on $s = 7.1"$ for KB-TZ anchor

$l_{req'd} = \frac{130^k}{(9.2^k/anchor)}(71"/12") = 8.4'$ min

Subject. Tower / Bldg Tie	Job Number A74370007	Date 11/28/08	
Job Fire Station 1	By DAL	Section	
	Checked By	Page	of

Shear Capacity

Concrete Breakout

$$V_{cbg} = \frac{A_{vc}}{A_{vco}} \psi_{ec} \psi_{ed} \psi_c V_b$$

Zone 1 (Group Mechanism)

$A_{vc} = (3 \times 45'')(8'') = 1080 \text{ in}$
$A_{vco} = 45(45)^2 = 9112.5 \text{ in}$ } 0.119

$\psi_{ec} = 1.0$
$\psi_{ed} = 1.0$
$\psi_c = 1.0$

$V_b = 7(1/2)^{0.2} \sqrt{0.75} \sqrt{1200} (45'')^{1.5}$

$V_b = 55.2^k$

$V_{cbg_1} = 6.57^k$ for group

Zone 1 (Single anchor failure)

$A_{vc} = (3 \times 14'')(8'') = 336 \text{ in}$
$A_{vco} = 4.5(14'')^2 = 882 \text{ in}$ } 0.381

$\psi_{ec} = 1.0$
$\psi_{ed} = 1.0$
$\psi_c = 1.0$

$V_b = 7(1/2)^{0.2} \sqrt{0.75} \sqrt{1200} (14'')^{1.5}$

$V_b = 9.58^k$

$V_{cb} = 3.65^k$ / anchor

Both of these results seem too low. Consider the shear friction capacity of same mechanisms to check validity of results shown above

Degenkolb

Subject:		Job Number	Date
Job		By	Section
		Checked By	Page of

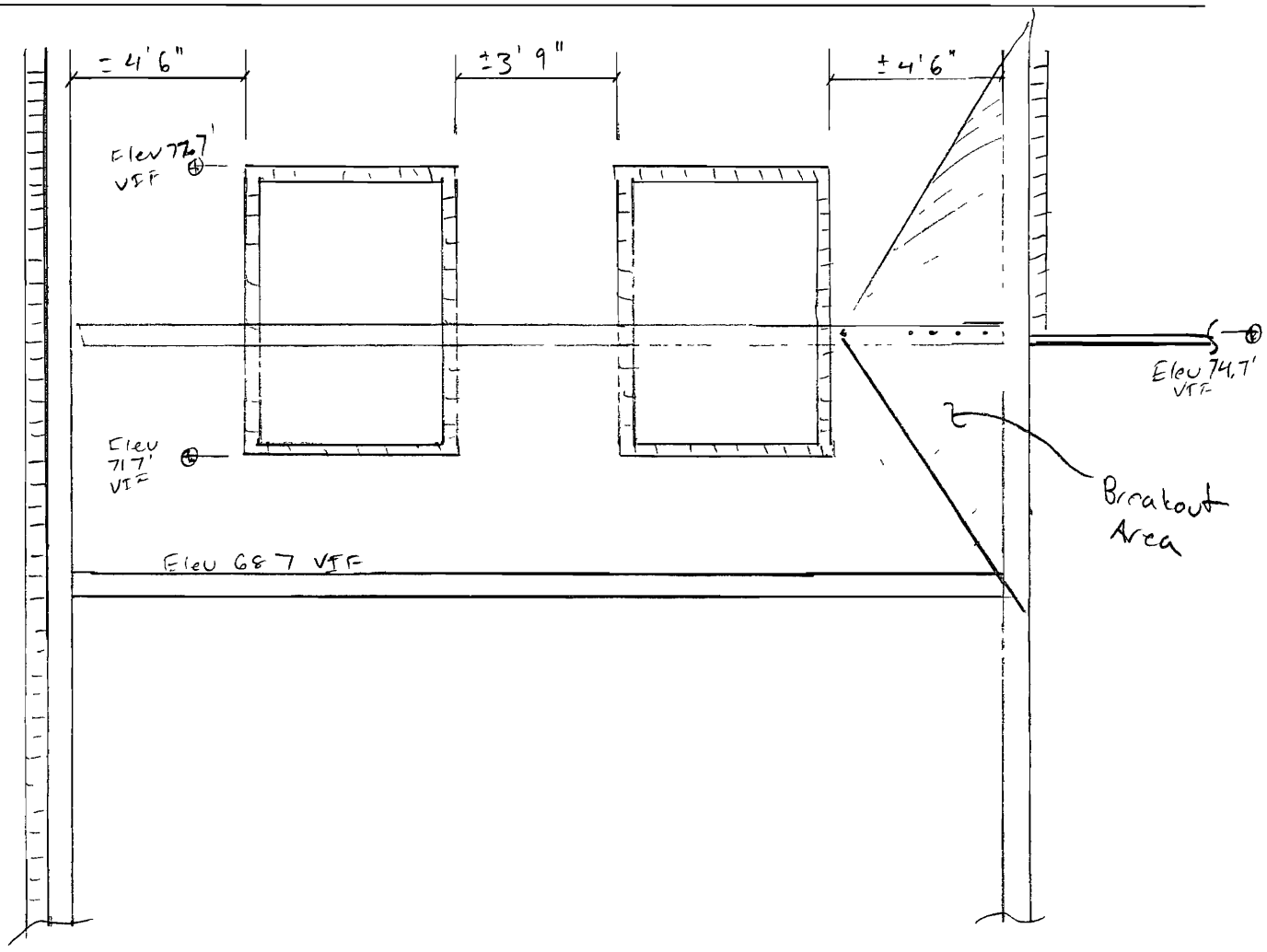

Most Critical Breakout Area for Tower/Bldg Ties

Degenkolb

Subject. Tower / Bldg Tie		Job Number A7437007	Date 1/29/08
Job Fire Station 1		By DAL	Section
		Checked By	Page of

Consider shear friction capacity of Concrete Breakout failure of anchors as a group

Horizontal length of crack = 5.25'

Bars = $5.25' \left(\frac{12}{15}\right) = 4$ Bars

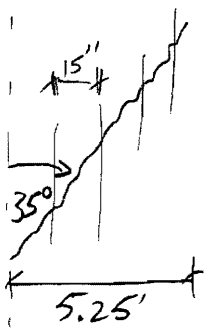

$V_n = A_{vf} f_y (\mu \sin\alpha + \cos\alpha)$

$= 4(0.31 \text{ in}^2)(52.5 \text{ ksi})[1.4 \sin 35° + \cos 35°]$

$= 106^k$ per crack

$\therefore V_n$ total $= 212^k$

This is capacity of Concrete crack just for Zone 1 This also ignores any increas in Capacity due to axial compression on crack from DL of tower above

$\therefore$ This Mechanism will not govern the failure of these anchors

Subject Tower / Bldg Tie		Job Number A7437007	Date 1/30/08
Job Fire Station 1		By DAL	Section
		Checked By	Page of

Consider the use of through bolts

Failure Modes

Concrete breakout

- Steel Capacity of bolt
- Concrete Pryout

Concrete breakout checked for KB-TZ anchors previously

Steel Capacity 1" Ø High Strength Bolt

From table 7-1 AISC Manual 8th ed

$r_n = \frac{28.3}{0.75} = 37.7^k$ in shear (steel capacity)

∴ # Through bolts req'd (based on steel strength)

$n = \frac{130^k}{37.7^k/bolt} = 3.4 \Rightarrow 4$ Bolts minimum

Use welded washer to cover long sloted hole in channel

Bearing check

$R_n = 3.4(1")(3/8")(58\,ksi) = 52^k > r_n$ ok by inspection

Weld Check

$R_n = (0.707)(70)(0.6)(1/4) \times 6" = 44^k > r_n$ ok

Subject Tower/Bldg Tie	Job Number A7437007	Date 1/30/08	
Job Fire Station 1	By DAL	Section	
	Checked By	Page	of

Consider Pryout of through-bolt
(Through-bolt should be as good/Better than Cast-in-place)

$V_{cpg} = k_{cp} N_{cbg}$ $\quad k_{cp} = 2.0$

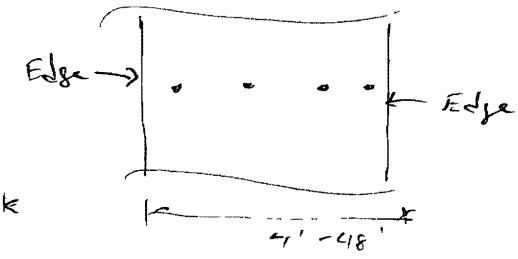

$N_{cbg} = \frac{A_{Nc}}{A_{Nco}} \psi_{ec} \psi_{ed} \psi_c \psi_{cp} N_b$

$N_b = 24\sqrt{1200}\,(8)^{1.5} = 18.8^k$

$A_{Nc} = (48")(1.5 + 2 \times 8 + 4") = 1346\ in^2$

$A_{Nco} = 9(8)^2 = 576\ in^2$

$\psi_{ec} = 1.0$

$\psi_{ed} = 0.7 + 0.3\left(\frac{6"}{1.5 \times 8"}\right) = 0.85$

$\psi_c = 1.25$

$N_{cbg} = \frac{1346}{576}(0.85)(1.25)(18.8^k) = 46.9^k$

$V_{cpg} = 2(46.9^k) = 94^k$ for 4' wide strip of wall bounded by windows

Worst Case

∴ Use through bolts to minimize need to cover windows in tower. Use two piers of tower @ North side @ roof

$V_{cpg} = 2(94^k) = 188^k > 132^k$ ok

Subject Tower / Building Tie		Job Number A7437007	Date 1/30/08
Job Fire Station 1		By DAL	Section
		Checked By	Page of

Consider 2nd / 3rd Flr Anchorages in Tower

- Concrete Breakout ok by Inspect
  ↳ checked Breakout @ Roof
- Steel Strength => 4 anchors minimum
- Concrete Pryout

Group :

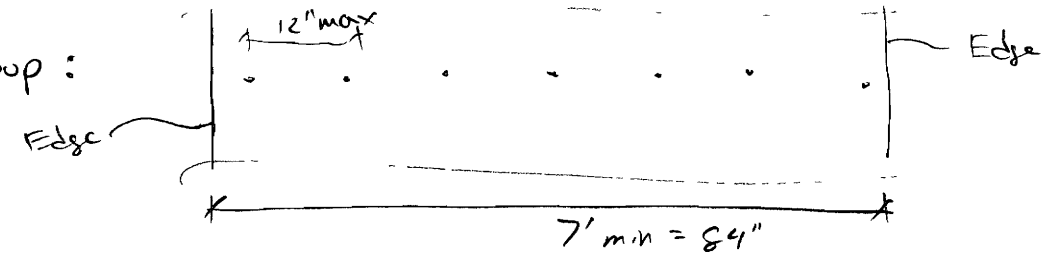

$V_{cbg} = k_{cp} N_{cbg}$ $\quad k_{cp} = 2.0$

$N_{cbg} = \frac{A_{Nc}}{A_{Nco}} \psi_{ec} \psi_{ed} \psi_c \psi_{cp} N_b$

$N_b = 24\sqrt{1200}\,(8)^{1.5} = 24.3^k$

$A_{Nc} = (84')(15 \times 2 \times 8 + 4') = 2352\ in^2$

$A_{Nco} = 576\ in^2$

$\psi_{ec} = 1.0$

$\psi_{ed} = 0.85$

$\psi_c = 1.25$

$N_{cbg} = 82^k$

$V_{cpg} = 164^k > 132^k$ ok

Subject Tower/Bldg Tie	Job Number A7437007	Date 2/1/08	
Job Fire Station 1	By DAL	Section	
	Checked By	Page	of

2nd Flr of Building

Diaphragm Shear Strength

$V_{CF,conc} = 2\sqrt{1200}\,(4)(12) = 33\ klf$

$V_{CF,stl} = (0.2\,in^2)(50\,ksi)\left(\frac{12''}{7''}\right) = 17.1\ klf$

$V_{CF} = 20.4\ klf$

Diaphragm Shear Friction

$V_{CF} = (0.2\,in^2)(50\,ksi)\left(\frac{12}{7}\right)(1.4) = 24\ klf$

Length of Collector Req'd based on Diaphragm

$\ell = \frac{132^k}{20.4\ klf} = 6.5'$

Shear Stud Connector

$Q_n = 0.5\,A_{sc}\sqrt{f'_c E_c} < A_{sc} F_u$

$Q_n = 11^k/stud$

ignoring 4" ø of (N) conc — conservative

$A_{sc} = 0.44\,in^2$

$f'_c = 1.2\ ksi$

$E_c = 2100\ ksi$

$F_u = 60\ ksi$

Collector length based on studs @ 12" o.c

$\ell = \frac{132^k}{11^k/ft} = \underline{\underline{12'}}$ min

Subject: Tower / Bldg Tie	Job Number A7437007	Date 2/1/08	
Job Fire Station 1	By DAL	Section	
	Checked By	Page	of

3rd Flr of Building

Diaphragm shear Strength

$V_{CF,\ Conc} = 2\sqrt{1200}\,(2.5)(12) = 2.1\ klf$

$V_{CF,\ stl} = (0.0528\ in^2/ft)(65\ ksi) = 3.4\ klf$

$V_{CF} = 5.5\ klf$

Diaphragm Shear Friction

$V_{CF} = (0.0528\ in^2/ft)(65\ ksi)(1.4) = 4.8\ klf$

Length of Collector Req'd based on Diaphragm

$\ell = \frac{132^k}{4.8\ klf} = 28'$

Shear Stud Connector

$Q_n = 0.5 A_{sc}\sqrt{f'_c E_c} < A_{sc} F_u$

$Q_n = 26^k/stud$

$A_{sc} = 0.44\ in^2$
$f'_c = 4\ ksi$
$E_c = 3500\ ksi$
$F_u = 60\ ksi$

Dowels into sides of posts

$V_{CF} = (0.31\ in^2)(60\ ksi)(0.6) = 11\ klf$ > Diaphragm Capacity

Degenkolb

Subject. Tower / Bldg Tie	Job Number A7437007	Date 2/4/08	
Job Fire Station 1	By DAL	Section	
	Checked By	Page	of

3rd Floor of Building

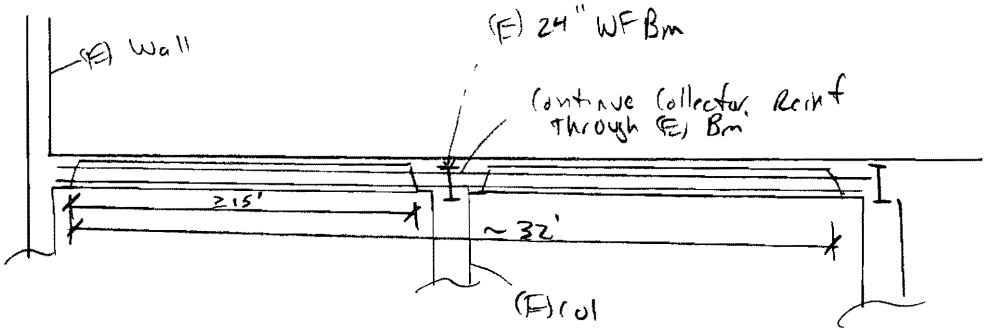

Consider length of stl Pl Collector w/ Shear studs

$\ell_{req'd} = \frac{132^k}{26^k/stud} = 5'$ w/ studs @ 12" O.C.

↳ Extend stl Pl and studs Throughout 1st Bay

$\Rightarrow \ell = 15' > 5'$ ok

Demand in long Reinf of Collector $= 132^k - (1.8k/f)(10') = 84^k$

$A_{s,req'd} = \frac{84^k}{60ksi} = 1.4 in^2$

∴ Use 5 - #5 $A_s = 1.55 in^2 > 1.4 in^2$ ok

Consider length of entire Collector in Bldg

$\ell = 32' > 28'$ ok

Subject. Tower/Bldg Tie		Job Number A7437007	Date 2/4/08
Job Fire Station 1		By DAL	Section
		Checked By	Page of

consider extra weight of infill btwn joists on (E) joists

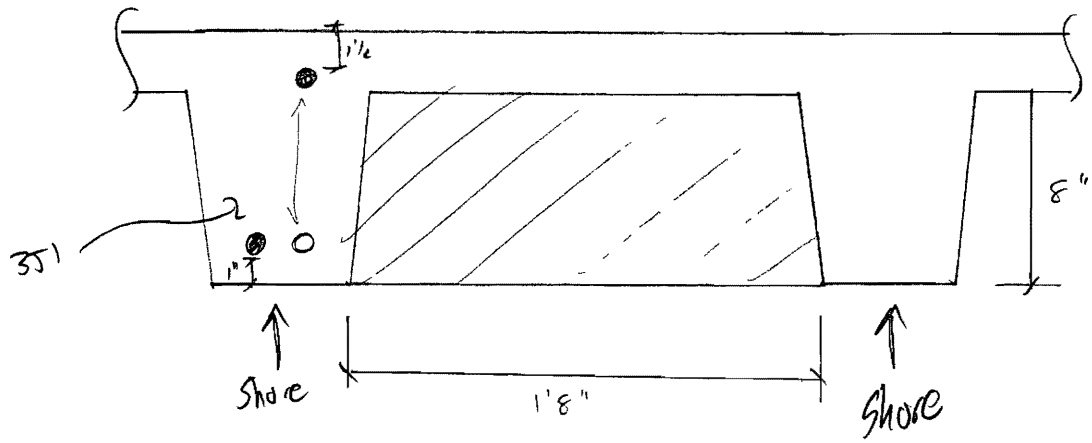

$(E)DL = \frac{(5.5)(8)+(7.5)(25.5)}{144}(150) = 112\,plf$

Additional DL: $\frac{(20)(8)}{144}(150pcf)\,\frac{1}{2} = 83\,plf$ per joist

$LL = (100psf)(25.5/12) = 213\,plf$

conservatively high

$w_u = 1.2(195plf) + 1.6(213plf) = 575\,plf$

$M_u^- = \frac{w_u l_n^2}{11} = \frac{(0.575k/f)(16')^2}{11} = 134^{k'} > \phi M_n^- = 119^{k'}$

$M_u^+ = \frac{w_u l_n^2}{11} = 134^{k'} < \phi M_n^+ = 245^{k'}$

∴ Shore (E) joists during Construction to prevent redistribution of Moment and subsequent cracking

Degenkolb

Subject: Tower/Bldg Tie	Job Number A74370C7	Date 2/4/08	
Job Fire Station 1	By DAL	Section	
	Checked By	Page	of

Check Shear Demand (E) Joists and (N) infill

$V_u = \frac{(0.575\ k/f)(16)}{2} = 4.6^k$ (If LL=60psf $\Rightarrow V_u = 3.5^k$)

$\phi V_n = 2\sqrt{2300}\,(5.5)(10)(0.75) = 4^k$ (expected)
$2\sqrt{1200}\,(5.5)(10)(0.75) = 2.9^k$ (lower bound) } (E) Joist

$\phi V_n = 2\sqrt{4000}\,(20)(8)(0.75) = 15.2^k$ (lower bound) - (N) Infill

· Shore (E) joists untill infill can support own weight.

Check Shear Demand in (E) Stl Girder (Std B Conn.)

12WF27 $\Rightarrow V_{all} = 21.6^k$ ok by inspection!
24WF100 $\Rightarrow V_{all} = 79.5^k$ ok by Inspection } V_{all} from 1946 AISC Manual

Subject: Tower / Bldg Tie	Job Number A7437007	Date 2/4/08	
Job Fire Station 1	By DAL	Section	
	Checked By	Page	of

Consider (E) 5th Bm Shear Demand

tributary width = 17'

$DL = (60psf)(17') + \frac{(16)(29)}{144}(150) = 1500plf$

$LL = (50psf)(17') = 850plf$

$w_u = 1.2D + 1.6L = 3.2\ klf$

$\phi M_n = (0.9)(36ksi)(248in^3) = 670^{k'}$

$M_u = \frac{wl^2}{8} = 336^{k'} < \phi M_n$ ok

DCR = 0.5

$\phi V_n = 0.9(0.45")(24")(36ksi \times 0.6) = 210^k$

$V_u = (3.2klf)\frac{(29')}{2} = 46^k < \phi V_n$ ok

DCR = 0.22

ANALYSIS SUMMARY

Project	Fire Station 1
Engineer	DAL
Design code	ACI 318-95
Compression face	South
Time of analysis	2/4/2008 10 53 14 AM

Factored Moment Resistance, ØMn (South-North)

Total area	0 527 ft^2
Centroid from origin (0,0)	6 21 in
Moment of inertia, Ix	760 7 in^4
Capacity reduction factor, Ø	0 90
Axial load resistance, ØPn (ØMn=0)	69 3 Kips
Moment resistance, ØMn (Pu=0 0 Kips)	11 9 Kips*ft
Cracking moment, Mcr	3 8 Kips*ft
Distance to N A , c	4 35 in

WARNING! SECTION IS OVERREINFORCED

ANALYSIS SUMMARY

Project	Fire Station 1
Engineer	DAL
Design code	ACI 318-95
Compression face	North
Time of analysis	2/4/2008 10 52 20 AM

Factored Moment Resistance, ØMn	(North-South)
Total area	0 527 ft^2
Centroid from origin (0,0)	6 21 in
Moment of inertia, Ix	760 7 in^4
Capacity reduction factor, Ø	0 90
Axial load resistance, ØPn (ØMn=0)	84 3 Kips
Moment resistance, ØMn (Pu=0 0 Kips)	24 5 Kips*ft
Cracking moment, Mcr	2 7 Kips*ft
Distance to N A , c	4 59 in

WARNING! SECTION IS OVERREINFORCED

Degenkolb

Subject: Tower/Bldg Tie	Job Number A7437007	Date 2/1/08	
Job Fire Station 1	By DAL	Section	
	Checked By	Page	of

Low Roof of Building (Similar to 3rd Flr)

Diaphragm shear Strength

$V_{CF,conc} = 2\sqrt{1200}(2)(12) = 1.7$ klf

$V_{CF,stl} = (0.0528\ in^2/ft)(65\ ksi) = 3.4$ klf

$V_{CF} = 5.1$ klf

Diaphragm Shear Friction

$V_{CF} = (0.0528\ in^2/ft)(65\ ksi)(14) = 4.8$ klf

$\ell = \frac{132^k}{4.8\ klf} = 28'$

Shear Stud Connector

$Q_n = 0.5 A_{sc}\sqrt{f'_c E_c} \leq A_{sc} F_u$

$Q_n = 26^k/stud$

f'_c 4 ksi

$E_c = 3800$ ksi

$A_{sc} = 0.44\ in^2$

$F_u = 60$ ksi

Degenkolb

Subject. Tower / Bldg tie	Job Number A7437007	Date 2/4/08	
Job Fire Station 1	By DAL	Section	
	Checked By	Page	of

Consider extra weight of infill btwn joists

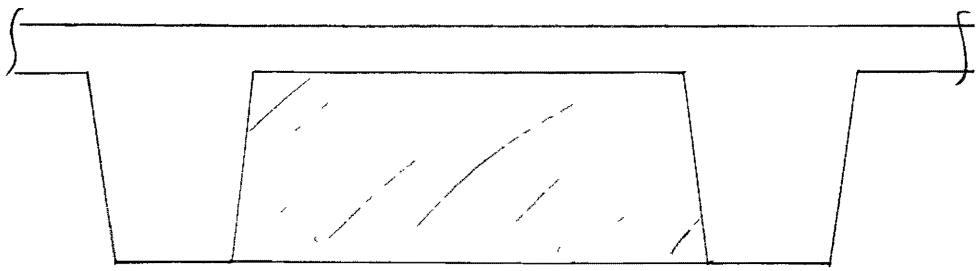

(E) DL = 100 plf

Add'l DL = 83 plf per joist

LL = (25 psf)(255'/12) = 53 plf

$w_u = 1.2(183\text{plf}) + 1.6(53\text{plf}) = 305\text{plf}$

$M_u^- = \frac{w_u l_n^2}{11} = \frac{(0.305)(16')^2}{11} = 7.1\text{ k ft} < 11.9^{k'}$ ok

$M_u^+ = 7.1^{k'} < 19.9^{k'}$ ok

$V_u = (305\text{plf})(\frac{16'}{2}) = 2.4^k$

$\phi V_n = 2\sqrt{1200}(55)(9) = 34^k > V_u$

However, shore due to uncertainty of Construction loading and Concrete pour procedure.

ANALYSIS SUMMARY

Project	Fire Station 1
Engineer	DAL
Design code	ACI 318-95
Compression face	South
Time of analysis	2/4/2008 1 18 18 PM

Factored Moment Resistance, ØMn (South-North)

Total area	0 483 ft^2
Centroid from origin (0,0)	5 83 in
Moment of inertia, Ix	646 8 in^4
Capacity reduction factor, Ø	0 90
Axial load resistance, ØPn (ØMn=0)	64 7 Kips
Moment resistance, ØMn (Pu=0 0 Kips)	11 9 Kips*ft
Cracking moment, Mcr	3 4 Kips*ft
Distance to N A , c	4 38 in

WARNING! SECTION IS OVERREINFORCED

ANALYSIS SUMMARY

Project	Fire Station 1
Engineer	DAL
Design code	ACI 318-95
Compression face	North
Time of analysis	2/4/2008 1 19 25 PM

Factored Moment Resistance, ØMn (North-South)

Total area	0 483 ft^2
Centroid from origin (0,0)	5 83 in
Moment of inertia, Ix	646 8 in^4
Capacity reduction factor, Ø	0 90
Axial load resistance, ØPn (ØMn=0)	75 3 Kips
Moment resistance, ØMn (Pu=0 0 Kips)	19 9 Kips*ft
Cracking moment, Mcr	2 4 Kips*ft
Distance to N A , c	4 06 in

WARNING! SECTION IS OVERREINFORCED

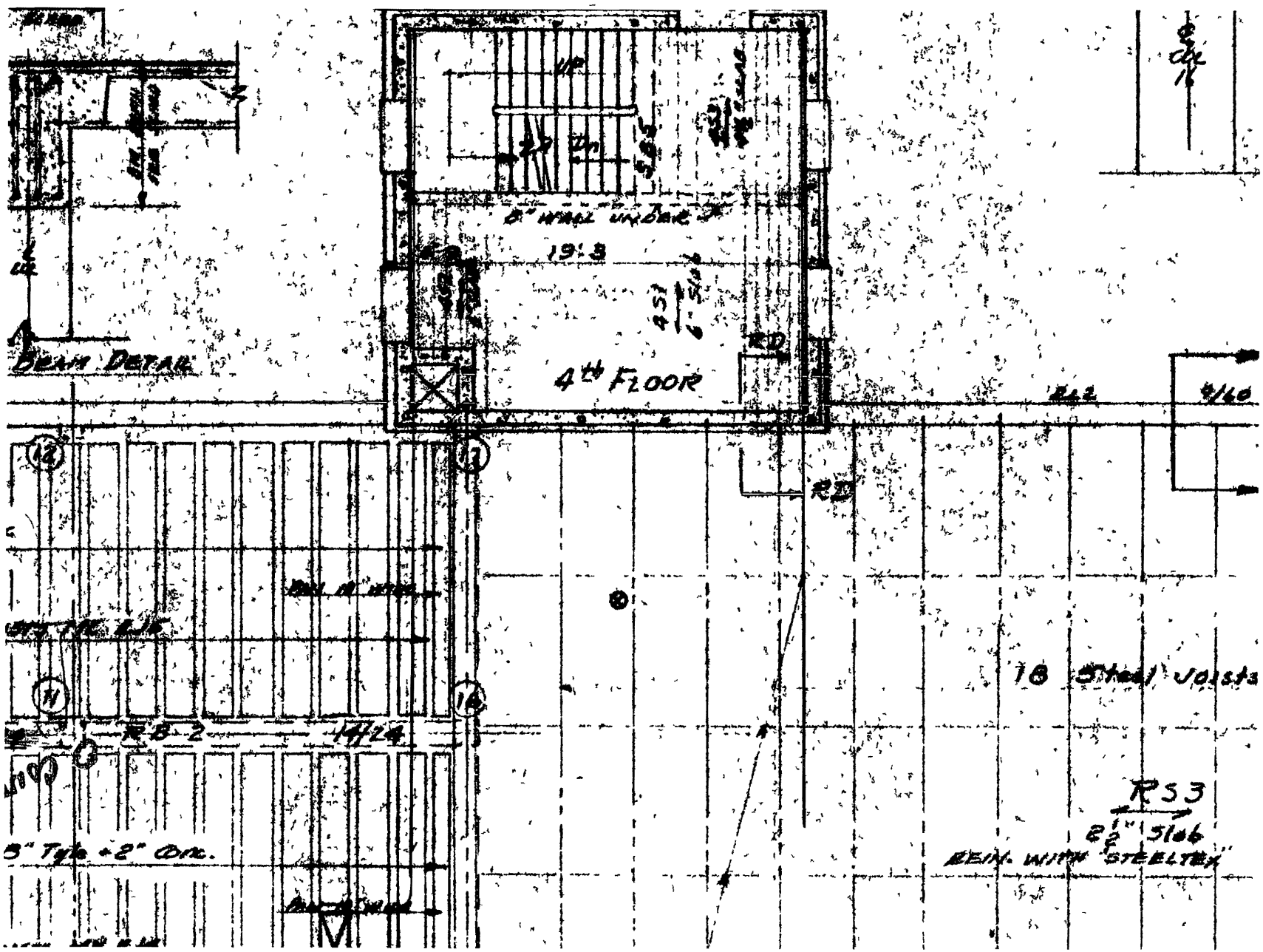
UP
DN
19'-3
4th FLOOR
BEAM DETAIL
RD
RD
18 Steel Joists
RS3
REIN. WITH "STEELTEX"
3" Tyle + 2" Onc.
12
13
11
14

Degenkolb

Subject	Tower Bldg Tie 2nd Flr	Job Number	A7437007
Job	Fire Station 1	By	DAL
		Checked By	
Date	1/8/08	Section	
Page	of		

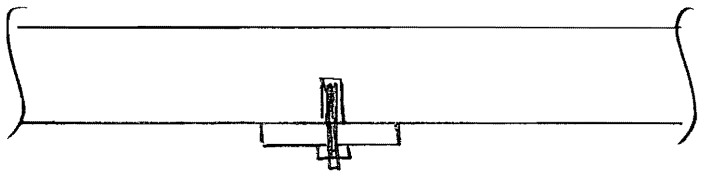

½"Ø KBTZ hef = 2"

Concrete Pryout Shear strength

$V_{cp} = k_{cp} N_{cb}$ $k_{cp} = 1.0$ b/c hef = 2"

$N_{cb} = \frac{A_{Nc}}{A_{Nco}} \psi_{ed} \psi_c \psi_{cp} N_b$

$\frac{A_{Nc}}{A_{Nco}} = 1.0$ w/ s = 3"

$\psi_{ed} = 1.0$
$\psi_c = 1.0$
$\psi_{cp} = 1.0$

$N_b = 17\sqrt{1200}\,(2)^{1.5} = 1.7^K$

$N_{cb} = 1.7^K$/anchor @ s = 3" O.C (6.8 klf)

- Need to use Adhesive Anchors to make $k_{cp} = 2.0$

Degenkolb

Subject	Collector Deflection (2nd Flr)	Job Number A7437007	Date 11/8/08
Job	Fire Station 1	By DAL	Section
		Checked By	Page of

Assuming Collector / Diaphragm Shear Capacity
5 klf

$l_{req'd} = \frac{130^k}{5\,klf} = 26' = 312''$

Deflection of Collector

Average Stress in Plate

$\Delta = \frac{PL}{AE} = \frac{(130^k)(312'')}{(3in^2)(29000)} \times \frac{1}{2} = 0.23''$ @ end

Degenkolb

Subject. Masonry Facade Support	Job Number A7437007	Date 2/6/08	
Job Fire Station 1	By DAL	Section	
	Checked By	Page	of

Load from bricks above

Assume solid stack of bricks from 2nd flr to roof completely loads ledger (Conservative)

$h = 31'$ of brick above ledger

$w = (30psf)(31') = 930\ plf$ (DL)

$w_{u_{brick}} = 1.4(930plf) = 13\ klf$

Use same Angle as Conc over Mtl Deck Detail

Demand from previous Calc

$w_u = (2.6^k/anchor)\left(\frac{1\ anchor}{2\ feet}\right) = 1.3^k/ft = w_{u_{brick}}$ ok

Degenkolb

Subject. Diaphragm Demands		Job Number A7437007	Date 12/14/07
Job Fire Station 1		By DAL	Section
		Checked By	Page of

Flr	Weight	E/W Shear	E/W Diaphragm Demand
Roof	1355	1606	1606^k
3rd	2274	2766	1733^k
2nd	2484	3646	1482^k
1st	2486	3943	1140^k

Degenkolb

Subject	Diaphragm Cord Roof	Job Number	A7437007
Job	Fire Station 1	By	DAL
		Checked By	
Date	12/14/07	Section	
Page	of		

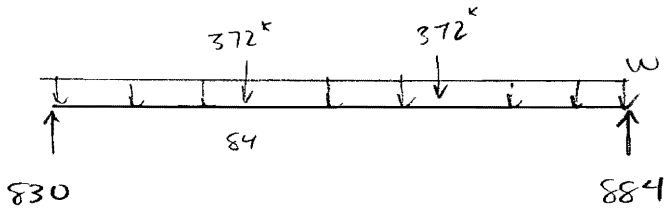

$w = \frac{970}{176} = 5.5$ klf

$M_{max} = 830(x) - \frac{5.5x^2}{2} - 372(x-84)$

$M_{max} \approx 50310^{k'}$

Tension Cord $= \frac{50310}{76} = 662^k$

Design Diaphragm Cord

for $T = \frac{662^k}{n=2.0} = 331^k$

$F_{ye} = (60 \text{ ksi})(1.25) = 75$ ksi.

Area $= \frac{331^k}{75 \text{ ksi}} = 4.4 \text{ in}^2$

Use (2) #14
(3) #11
(4) #10
(5) #9
(6) #8

Degenkolb

Subject: Roof Collector (East Side)	Job Number A7437007	Date 1/3/08	
Job Fire Station 1	By DAL	Section	
	Checked By	Page	of

<u>Anchor Capacity</u> (steel capacity V_{sa} = 17k/anchor)

Concrete pryout strength in shear

$V_{cp} = \min \left| k_{cp} N_a , k_{cp} N_{cb} \right|$

$k_{cp} = 2.0$ for $h_{ef} > 2.5''$

N_a: Adhesive anchor pullout

N_{cb} Appendix D Breakout

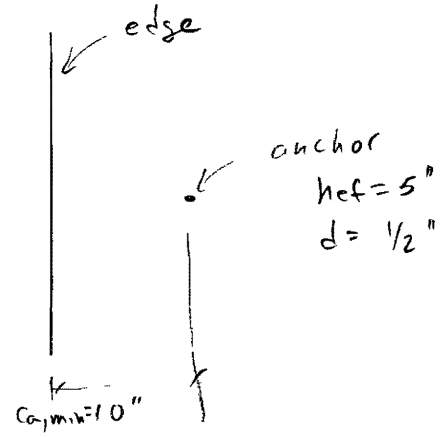

<u>Adhesive anchor pullout.</u>

$N_a = \frac{A_{Na}}{A_{Nao}} \psi_{p,NA} N_{ao}$

$A_{Nao} = (s_{cr,Na})^2 = 354 \text{ in}^2$

$s_{cr,Na} = 20 d \sqrt{\frac{\tau_{k,uncr}}{1450}} \leq 3 h_{ef} = 12.5''$

$d = 1/2''$

$\tau_{k,uncr} = 2265 \text{ psi}$

$c_{cr,Na} = \frac{s_{cr}}{2} = 6.25''$

$A_{Na} = A_{Nao}$ b/c $c_{cr,Na} < 10''$

$N_{ao} = \tau_{k,cr} \pi d h_{ef} = 8.6^k$

$\tau_{k,cr} = 1090$ $(\phi = 1.0)$

Degenkolb

Subject. Roof Collector (East side)		Job Number A7437007	Date 1/3/08
Job FS1		By DAL	Section
		Checked By	Page of

Adhesive anchor Pullout cont'd

$h_{min} = h_{ef} + 1.25'' = 5 + 1.25 = 6.5''$ Min Member thickness

$h = 10'' > h_{min}$ ok

$c_{ac} = 2.5(h_{ef}) = 12.5''$ Critical edge Distance

$\psi_{p,Na} = \text{Max}\left|\frac{c_{a,min}, c_{cr,Na}}{c_{ac}}\right| = \frac{10}{12.5} = 0.8''$

$N_a = (1)(0.8)(8.6^k) = 6.9^k/\text{anchor}$

Degenkolb

Subject	Roof Collector (East Side)	Job Number	A7437007
Job	FS1	By	DAL
		Checked By	
Date	1/3/08	Section	
Page	of		

Appendix D Breakout

$N_{cb} = \frac{A_{Nc}}{A_{Nco}} \psi_{ed,N} \psi_{c,N} \psi_{cp,N} N_b$

$A_{Nco} = 9(5)^2 = 225 \text{ in}^2$

$A_{Nc} = A_{Nco}$ b/c $c_{a,min} > 1.5(5") = 7.5"$

$\psi_{ed,N} = 1.0$

$\psi_{c,N} = 1.0$

$\psi_{cp,N} = \frac{c_{a,min}}{c_{ac}} = \frac{10}{12.5"} = 0.8$

$N_b = 17\sqrt{1200}\,(5)^{1.5} = 6.6^k$

$N_{cb} = 5.3^k/\text{anchor}$

$N_{cb} < N_a$

$V_{cp} = 2(5.3^k/\text{anchor}) = 10.6^k/\text{anchor}$ w/ $s = 7.5"$

Degenkolb

Subject Roof Collector (High Roof)	Job Number A7437007	Date 1/3/08	
Job Fire Station 1	By DAL	Section	
	Checked By	Page	of

Through Bolt Bearing Capacity

$P_n = 0.85 f'_c A_1$

$P_n = 0.85(2)(0.75)(2.5) = 3.2^k$/anchor

Space anchors @ 6" O.C.

$V_n = 6.4$ klf > 4.4 klf ok

Degenkolb

Subject	Diaphragm Cord . 3rd Flr	Job Number	A7437007
Job		By	DAL
		Checked By	
Date	12/14/07	Section	
Page	of		

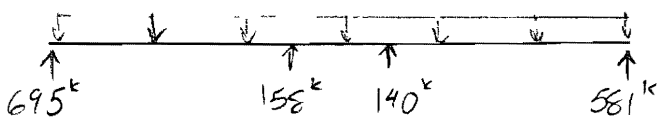

$w = \frac{1574^k}{176'} = 8.9^k/ft$

$M_{max} \approx 27140^{k'}$

Tension Cord $= \frac{27140^{k''}}{76'} = 357^k$

Design Diaphragm Cord
for $T = \frac{357^k}{m=2.0} = 179^k$

$F_{ye} = (60\ ksi)(1.25) = 75$ ksi.

$A_{req} = \frac{179^k}{75\ ksi} = 2.4\ in^2$

Use (4) #7
(3) #8 $\Rightarrow A_s = 2.37\ in^2$
(2) #10

Design Adh Dowels for shear transfer

$\frac{(2.37\ in^2)(75\ ksi)}{(176'/2)} = \underline{2\ klf}$

Degenkolb

Subject	Diaphragm Cord 3rd Flr	Job Number	A74137007
Job	Fire Station 1	By	DAL
		Checked By	
Date	1/4/08	Section	
Page	of		

Adhesive Dowel Capacity

Concrete Pryout Strength of Anchor @ angle (other anchors sim)

$V_{cp} = \text{Min}\{k_{cp} N_a, k_{cp} N_{cb}\}$

$k_{cp} = 2.0$

N_a: adhesive anchor pullout

N_{cb} Appendix D Breakout

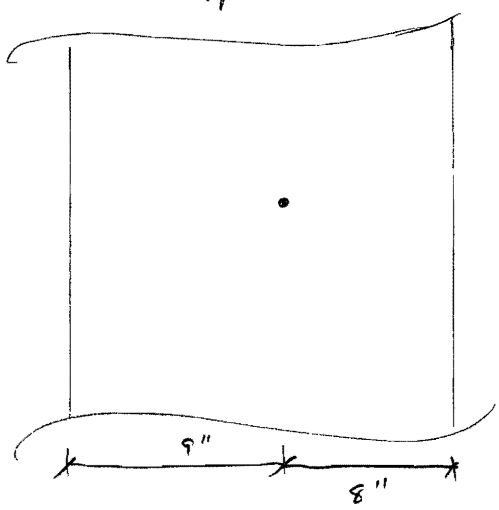

Plan

$C_{a\,min} = 8''$

$h_{eff} = 7''$

$d = 5/8''$

Degenkolb

Subject Diaphragm Cord 3rd Flr		Job Number A7437007	Date 1/4/08
Job Fire Station 1		By DAZ	Section
		Checked By	Page of

Adhesive Anchor Pullout

$$N_a = \frac{A_{Na}}{A_{Nao}} \psi_{p,NA} N_{ao}$$

$$A_{Nao} = (S_{cr,Na})^2 = 243 in^2$$

$$S_{cr,Na} = 20d\sqrt{\frac{\tau_{k,uncr}}{1450}} \leq 3h_{ef} = 15.6''$$

$$d = 5/8''$$

$$\tau_{k,uncr} = 2265 \text{ psi}$$

$$C_{cr,Na} = 7.8''$$

$$A_{Na} = (9+8)(2\times 6'') = 204 in^2 \quad w/ \ S = 6''$$

$$N_{ao} = \tau_{k,cr} \pi d h_{ef} = 15^k$$

$$\tau_{k,cr} = 1090 \text{ psi}$$

$$h_{min} = h_{ef} + 2d_o = 7 + 1.25 = 8.25'' \quad \text{Min Member Thickness}$$

$$h = 10'' > h_{min} \quad \underline{ok}$$

$$C_{ac} = 2.5 h_{ef} = 17.5''$$

$$\psi_{p,Na} = Max\left|\frac{C_{a,min}, C_{cr,Na}}{C_{ac}}\right| = \frac{8}{17.5} = 0.46$$

$$N_a = \frac{204}{243}(0.46)(15^k) = 5.8^k/\text{anchor} \quad w/ \ S = 6''$$

Degenkolb

Subject: Diaphragm Cord 3rd Flr	Job Number A7437007	Date 1/4/08	
Job Fire Station 1	By DAL	Section	
	Checked By	Page	of

Appendix D Breakout

$N_{cb} = \frac{A_{Nc}}{A_{Nco}} \psi_{ed,N} \psi_{c,N} \psi_{cp,N} N_b$

$A_{Nco} = 9(7)^2 = 441 \text{ in}^2$

$A_{Nc} = 204 \text{ in}^2$ w/ $s = 6''$

$\psi_{ed,N} = 0.7 + 0.3 \left(\frac{8''}{1.5(7)}\right) = 0.93$

$\psi_{c,N} = 1.0$

$\psi_{cp,N} = \frac{8}{1.75} > \frac{1.5(7)}{1.75} = 0.6$

$N_b = 17\sqrt{1200}\,(7)^{1.5} = 10.9^k$

$N_{cb} = 2.8^k$/anchor

$N_{cb} < N_a$

$\therefore V_{cp} = 2(2.8^k/\text{anchor}) = 5.6^k$/anchor w/ $s = 6''$

Degenkolb

Subject Diaphragm Cord 2nd Flr		Job Number	Date 12/14/07
Job		By	Section
		Checked By	Page of

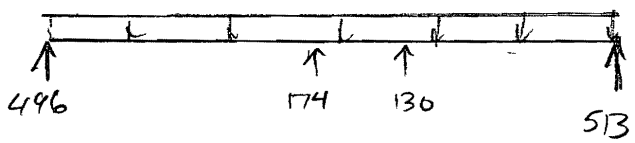

$w \approx \frac{1313^k}{176} = 7.5\ klf$

$M_{max} \approx 16500^{k'}$

Tension Cord $= \frac{16500^{k'}}{76'} = 217^k$

Design Cord for $T = \frac{217}{m=2.0} = 109^k$

$F_{ye} = (60\ ksi)(1.25) = 75\ ksi$

$A_{req} = \frac{109}{75} = 1.5\ in^2$

$\therefore$ Use (2) #8 $\leftarrow A_s = 1.58\ in^2$
(3) #7
(4) #6

Design Anchors for Expected Capacity of chord

$\frac{(1.58\ in^2)(75\ ksi)}{176'/2} = \underline{\underline{1.4\ klf}}$

Degenkolb

Subject. Diaphragm Cord · 1st Flr	Job Number	Date 12/14/07	
Job	By	Section	
	Checked By	Page	of

Simplified Diaphragm

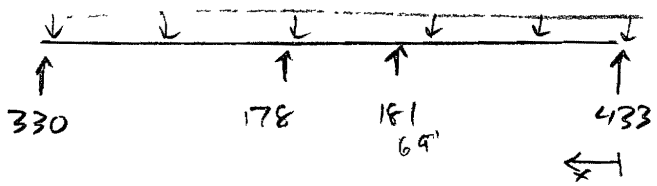

$w \approx \frac{1122}{176} = 6.4 \text{ k/lf}$

$M(x) = 433x - \frac{6.4x^2}{2}$

$M_{max} \approx 14650^{k'}$

Tension Cord Demand $\leq \frac{14650^{k'}}{76'} = 194^k$

Design Diaphragm Cord for $T = \frac{194}{\phi = 2.0} = 97^k$

$F_{ye} = (66 \text{ ksi})(1.5) = 75 \text{ ksi}$

$A_{req} = \frac{97}{75} = 1.3 \text{ in}^2$

$\therefore$ Use (2) #8 $\Rightarrow A_s = 1.58 \text{ in}^2$

Same as chord on 2nd Flr

Degenkolb

DEGENKOLB ENGINEERS

San Francisco
235 Montgomery Street, Suite 500
San Francisco, California 94104-2908
415 392 6952 *phone*
415 981 3157 *fax*

Los Angeles
300 South Grand Avenue, Suite 1115
Los Angeles, California 90071 3121
213 596 5000 *phone*
213 596 5960 *fax*

Portland
707 SW Washington Street Suite 600
Portland, Oregon 97205
503 223 9932 *phone*
503 242 1780 *fax*

Oakland
300 Frank H Ogawa Plaza, Suite 450
Oakland California 94612-2047
510 272 9040 *phone*
510 272 9526 *fax*

San Diego
225 Broadway, Suite 1325
San Diego California 92101
619 515 0299 *phone*
619 515 0298 *fax*

Seattle
600 University Street Suite 720
Seattle Washington 98101
206 262 9240 *phone*
206 262 9346 *fax*

www degenkolb com

VOL 2 of 2

Degenkolb

CITY OF PORTLAND FIRE STATION #1 SEISMIC UPGRADE AND FACILITY REMODEL

Calculations 2 of 2

March 6, 2008
Degenkolb Job Number A7293007 00

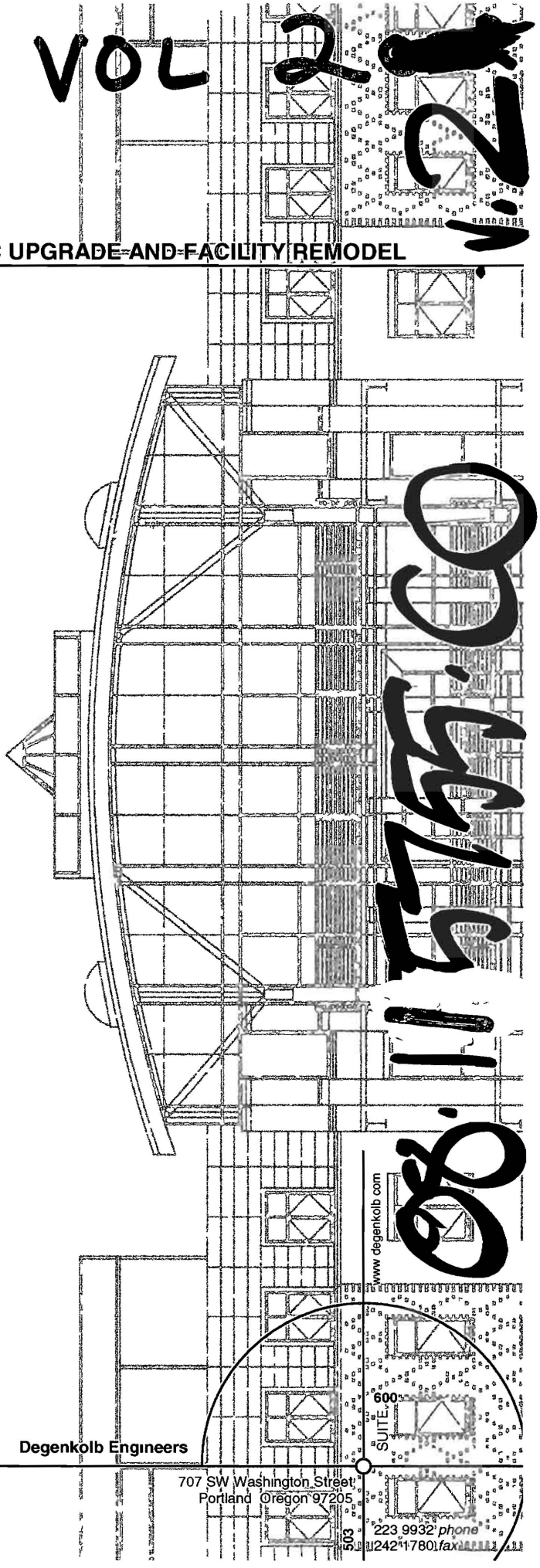

Degenkolb Engineers
707 SW Washington Street, SUITE 600
Portland Oregon 97205
503 223 9932 phone
242 1780 fax
www.degenkolb.com

Section C: 2nd Floor Infill Framing

Degenkolb

Subject. 2nd Flr Infill		Job Number A7437007	Date 10/12/07
Job Fire Station 1		By DAL	Section
		Checked By IBE	Page 1 of

Assume 100psf LL Req'd
(Fire Rating?)

Consider LW Conc over Mtl Deck

Assume span = 11' and 12'

Deck Type	Conc Thickness	Span	Gauge	
B	4" (~30psf)	11'	16	
		12'	N/A	
	4 3/4" (~35psf)	11'	22	
		12'	N/A	
W2	4" (~30psf)	11'	18	(No Shore)
		12'	18	(Shore)
(2hr Fire)	5 1/4" (~40psf)	11'	22 Ga	
		12'	22 Ga	
W3	5" (~35psf)	11'	22	(Shore)
		12'	22	(Shore)
		11'	19	(No Shore)
		12'	19	(No Shore)
	6 1/4" (~45psf) (2HR Fire Rating)	11'	18	(No Shore)
		12'	18	(No shore)

⟹

ALL SUPERIMPOSED LOAD = 203psf min // OK WT. ≈ 45psf

Degenkolb

Subject. 2nd Flr Infill		Job Number A7437007	Date 10/12/07
Job Fire Station 1		By DAL	Section
		Checked By JBE	Page 2 of

(N) TYP. Stl Beams $\boxed{\text{Bm (A)}}$ — SEE BELOW

DL 45psf from Conc over M+1 Deck
15 psf Misc MEP etc (15 psf Construction LL)

LL Assume 100 psf

Tributary width on Beam = 11'0"

Length of Bm = 23'

$w_u = [1.2(60psf) + 1.6(100psf)]11' = 2.6$ klf

$V_u = 30^k$

Use Composite Bm Ramsbeam

Use W14x22 w/ 3/4"ϕ STUD x 5" LONG @ 12" o.c.

Note be sure to slot bolt holes @ connections to create simple support Beam

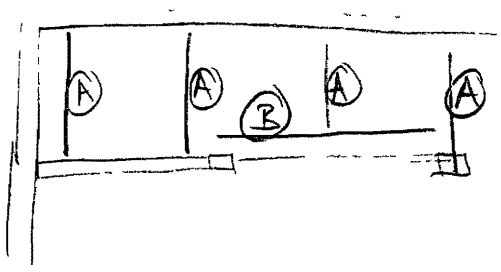

RAMSBEAM V2 0 - Gravity Beam Design
Licensed to Degenkolb Engineers
Job Fire Station 1 Steel Code LRFD

0192
3/

SPAN INFORMATION 2nd Floor Infill Stl Beams
Beam Size (User Selected) = W14X22 Fy = 50 0 ksi
Total Beam Length (ft) = 23 00

OMPOSITE PROPERTIES (Not Shored)	Left	Right
Concrete thickness (in)	3 25	3 25
Unit weight concrete (pcf)	110 00	110 00
f'c (ksi)	4 00	4 00
Decking Orientation	perpendicular	perpendicular
Decking type	VERCO W3 Formlok	VERCO W3 Formlok
Distance to Adjacent (ft)	Edge 11 00	Beam 11 00

beff (in) = 69 00 Y bar(in) = 15 39
Mnf (kip-ft) = 336 08 Mn (kip-ft) = 301 78
C (kips) = 244 04 e (in) = 12 60
Ieff (in**4) = 764 67 Itr (in**4) = 851 29
Stud length (in) = 5 00 Stud diameter (in) = 0 75
Stud Capacity (kips) Qn = 21 2
# of studs Max = 23 Partial = 9 Actual = 23
Number of Stud Rows = 1, Percent of Full Composite Action = 75 20

LOADS Self Weight = 0 022 k/ft
Line Loads (k/ft)

Dist1	Dist2	DL1	DL2	Pre DL1	Pre DL2	LL1	LL2
0 00	23 00	0 660	0 660	0 660	0 660	1 100	1 100

SHEAR (Ultimate) Max Vu 1 2DL+1 6LL (kips) = 29 65 0 90Vn = 85 33

OK FOR ADD'L Vu FROM BM (B) OF 15'

MOMENTS

Span	Cond	LoadCase	Mu kip-ft	@ ft	Lb ft	Cb	Phi	Phi*Mn kip-ft
Center	Pre DL	1 4DL	63 1	11 5	---	---	0 90	124 50
Center	Max +	1 2DL+1 6LL	170 5	11 5	---	---	0 85	256 52
ontrolling		1 2DL+1 6LL	170 5	11 5	---	---	0 85	256 52

REACTIONS (Unfactored) (kips)	Left	Right
Initial reaction	7 84	7 84
DL reaction	7 84	7 84
Max + LL reaction	12 65	12 65
Max + total reaction	20 49	20 49

DEFLECTIONS (Camber = 1/2)

Initial load (in)	at 11 50 ft =	-0 744	L/D =	371
Live load (in)	at 11 50 ft =	-0 312	L/D =	884
Post Comp load (in)	at 11 50 ft =	-0 312	L/D =	884
Total load (in)	at 11 50 ft =	-1 057	L/D =	261

//OK

DESIGN WF BM ADJ. TO (E) CONC BM $\boxed{\text{BM (B)}}$ SEE PG 2

30k ⇒ 1.2D+1.6L

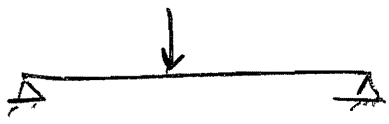

LL = 100psf × 11' = 1.1 k/f × 23/2 = 12.7 k

DL = 60psf × 11' × 23/2 = 7.6 k

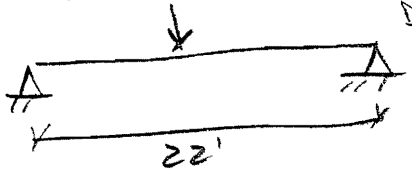

$$\Delta = \frac{PL^3}{48EI}$$

$$\Delta \cdot I = \frac{PL^3}{48E} = \frac{(12.7^k)(22')^3 \times 12^3}{48(29000ksi)} = 167.9 \text{ in/in}^4$$

LOOK @ RAMS BM FOR COMPOSITE ACTION FOR Δ

LOOK @ (E) CONC BM

16" × 22"

LOAD = 100psf × 5.5' = 550 plf

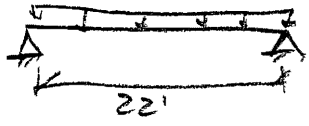

$$\Delta = \frac{5wL^4}{384EI}$$

USE I_g (CONS FOR THIS CASE)

$$I_g = \frac{bh^3}{12} = \frac{16(22)^3}{12} = 14197 \text{ in}^4$$

w = 550 plf = 45.8 #/in = 0.0458 k/in

L = 22 × 12 = 264 in

$E_c = 57\sqrt{1200} = 1975$ ksi

Δ = 0.1033" ⇒ CONS. BY USING I_g

5/

RAMSBEAM V2 0 - Gravity Beam Design
Licensed to Degenkolb Engineers
Job Fire Station 1 Girder Steel Code LRFD

SPAN INFORMATION
Beam Size (User Selected) = W14X38 Fy = 60 0 ksi
Total Beam Length (ft) = 22 00

COMPOSITE PROPERTIES (Not Shored)	Left	Right
Concrete thickness (in)	3 25	3 25
Unit weight concrete (pcf)	110 00	110 00
f'c (ksi)	4 00	4 00
Decking Orientation	parallel	parallel
Decking type	VERCO W3 Formlok	VERCO W3 Formlok
Distance to Adjacent (ft)	Beam 0 25	Edge 23 00

beff (in)	=	34 50	Y bar(in)	=	12 35
Mnf (kip-ft)	=	537 50	Mn (kip-ft)	=	487 30
C (kips)	=	233 43	e (in)	=	12 30
Ieff (in**4)	=	933 66	Itr (in**4)	=	1086 16
Stud length (in)	=	5 00	Stud diameter (in)	=	0 75

Stud Capacity (kips) Qn = 21 2
# of studs Full = 36 Partial = 9 Actual = 22
Number of Stud Rows = 1, Percent of Full Composite Action = 61 23

LOADS Self Weight = 0 038 k/ft
Point Loads (kips)

Dist	DL	Pre DL	LL	Flange Bracing Top	Bottom
11 00	7 60	7 60	12 70	Yes	Yes

SHEAR (Ultimate) Max Vu 1 2DL+1 6LL (kips) = 15 22 0 90Vn = 141 62

MOMENTS

Span	Cond	LoadCase	Mu kip-ft	@ ft	Lb ft	Cb	Phi	Phi*Mn kip-ft
Center	Pre DL	1 4DL	61 7	11 0	---	---	0 90	276 75
Center	Max +	1 2DL+1 6LL	164 7	11 0	---	---	0 85	414 21
Controlling		1 2DL+1 6LL	164 7	11 0	---	---	0 85	414 21

REACTIONS (Unfactored) (kips)	Left	Right
Initial reaction	4 22	4 22
DL reaction	4 22	4 22
Max + LL reaction	6 35	6 35
Max + total reaction	10 57	10 57

OK

DEFLECTIONS

Initial load (in)	at 11 00 ft =	-0.279	L/D =	947
Live load (in)	at 11 00 ft =	-0 180	L/D =	1468
Post Comp load (in)	at 11 00 ft =	-0 180	L/D =	1468
Total load (in)	at 11 00 ft =	-0 459	L/D =	576

W14x38 w/ 3/4" Ø x5" STUDS @12" o.c.

DESIGN CONNECTION OF WF BM TO CONC. WALL

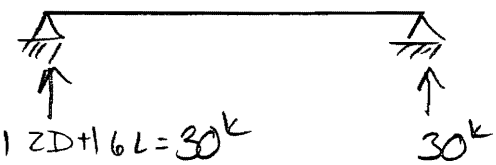

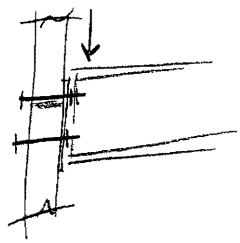

W/

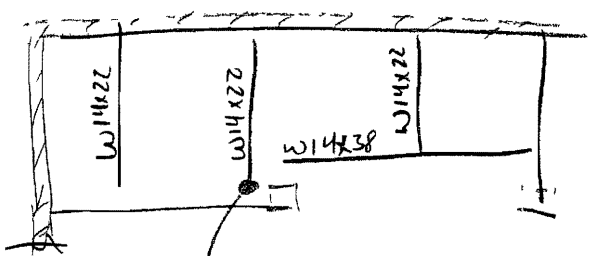

$= 30^k + 15^k = 45^k$

TRY THRU BOLTS THRU CONC WALL

TRY $1\frac{1}{8}''\phi$ BOLTS

BEARING $= 1\frac{1}{8}'' \times \underbrace{8''}_{t_{conc}} = 9\,in^2$

$\phi(0.85)f'_c A = 0.65(0.85)1200\,psi\,A > 45^k$

$A > 67.87\,in^2$

$\#\,BOLTS = \frac{A}{9} = 7.5$ // USE 8 BOLTS

USE (8) $1\frac{1}{8}''\phi$ BARS $\Rightarrow \phi V_n = 47.7^k$ $\Rightarrow$ TOO CONS.

$\phi V_n = (0.65)(0.85)(1.2\,ksi)(1.125)(8'')(8) =$

STEEL $\Rightarrow V_n = 0.75(1.0) \times 36\,ksi \times 0.6 \times 8 = 130^k$ // OK

Degenkolb

Subject:	Job Number	Date
Job	By	Section
	Checked By	Page 7 of

CHECK THRU BOLTS USING APP. D

D6.1 // OK USE smaller Ø? Try 3/4" Ø $V_{sa} = n A_{se} f_{uta} = 205^k$

$n = 8$, $A_{se} = 0.442$, $f_{uta} = 58\,ksi$

D6.2 // N/A

D6.3 => CONC. PRYOUT OF ANCHOR IN SHEAR $\phi V_{sa} = 0.65 \times V_{sa} \times 0.75 = 99^k$ // OK

$V_{cpg} = k_{cp} N_{cbg}$ $\phi = 0.75$

$k_{cpg} = 2.0$

$h_{ef} = 8''$

$N_{cbg} = \frac{A_{Nc}}{A_{Nco}} \psi_{ec,N} \psi_{ed,N} \psi_{c,N} \psi_{cp,N} N_b$

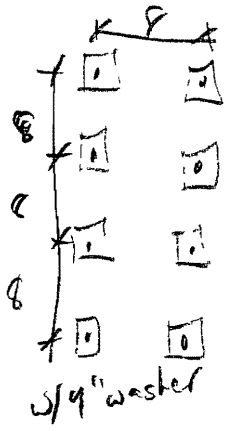

$A_{Nco} = 9(8)^2 = 576\,in^2$

$A_{Nc} = (3.8 + 3.8 + 4) \times (8 + 3.8 + 4) = 187\,in^2$

$\psi_{ec,N} = 1.0$

$\psi_{ed,N} = 1.0$

$\psi_{c,N} = 1.0$

$\psi_{cp,N} = 1.0$

$N_b = k_c \sqrt{f'_c}\, h_{ef}^{1.5} = 13325$

$k_c = 17$

$f'_c = 1200$

$N_{cbg} = 43.3^k$

$V_{cpg} = 86.6^k$

$\phi V_{cpg} \times 0.75 = 0.75(62^k)(0.75) = 48.7^k$ // OK for typ. BM $V = 30^k$

↳ seismic typ. long bm $V = 45^k$

Degenkolb

Subject:		Job Number:	Date
Job		By	Section
		Checked By	Page of

eccentricity from connection can be taken out by shear in the shear studs and comp. in the concrete slab.

Subject:	Job Number	Date
Job	By	Section
	Checked By	Page 8 of

DESIGN WF TO CONC. CONN @ BM w/ conc wall below after construction

W14x22 TO 8" CONC. WALL
OR 9" CONC. WALL

$V_u \Rightarrow$ $1.2D+1.6L = 1.2(60)+1.6(20) = 104$ psf (const. LL only)
$1.2D+1.6L = 1.2(60)+1.6(100) = 232$ psf
scale 45^k by $\frac{104}{232} = 20^k$

TRY SIMPSON STRONG-BOLT

$\frac{8''}{1.5} = 5.33''$ = max EMBED

TRY $\Rightarrow$ 5/8" x 5 1/8" EMBED $h_{ef} = 4.5''$
$S_{min} = 6\frac{1}{4}''$

D6.1
$\phi V_s = 10.5^k \times 0.65 \times 0.75 = 5^k$ // OK w/ 4 min Anchors

D6.2 N/A

D6.3 Conc Pry out

$V_{cp} = k_{cp} N_{cbg}$
$k_{cp} = 2.0$

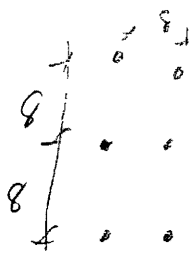

$N_{cbg} = \frac{A_{Nc}}{A_{Nco}} \psi_{ec,N}\, \psi_{ed,N}\, \psi_{c,N}\, \psi_{cp,N}\, N_b$ ($\psi_{ec,N}$ = 1.0, $\psi_{ed,N}$ = 1.0, $\psi_{c,N}$ = 1.0, $\psi_{cp,N}$ = 1.0, $N_b = 17\sqrt{f'_c}\,(h_{ef})^{1.5}$) $= 5.62$

$A_{Nco} = 9(4.5)^2 = 182 \text{ in}^2$
$A_{Nc} = 29.5'' \times 21.5'' = 634 \text{ in}^2$
$N_{cbg} = 19.6^k$
$V_{cp} = 39.2^k$ $\phi V_{cp} \times 0.75$ (seismic) $= 0.75(39.2)(0.75) = 22^k$ // OK

* eccentricity taken out w/ shear studs in conc or mtl deck

Design L to Conc wall Conn

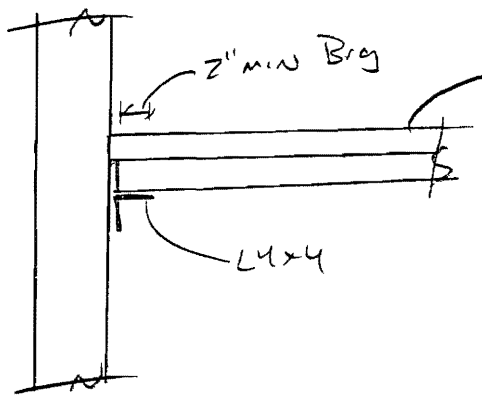

$1.2D + 1.6L = 232psf$

60psf 100psf

$232psf \times \frac{11}{2} \times 2' = 2.6^k$

anchor spacing

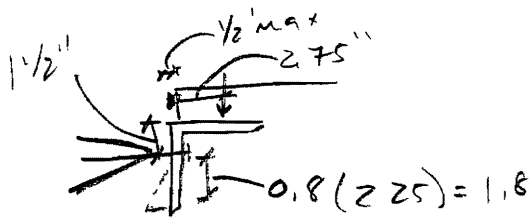

Anchor

$V_u = 2.6^k$

$T_u = \frac{2.6^k \times 2.75}{1.8^k} = 4^k$

Look @ V in Anchor

Try 5/8" Ø Simpson Strong Bolt — 5 1/8" embed

D6.1 $\phi V_s = 0.65(10.475) = 6.8^k$ ← Controls

D6.2 N/A

Degenkolb

Subject.	Job Number	Date
Job	By	Section
	Checked By	Page 16 of

D6.3

$V_{cp} = k_{cp} N_{cb}$ (2.0)

$N_{cb} = \frac{A_{Nc}}{A_{Nco}} \psi_{ec,N} \psi_{ed,N} \psi_{c,N} \psi_{cp,N} N_b$ (1.0, 1.0, 1.4, 1.0)

$N_b = 17\sqrt{f'_c}\,(5.125)^{1.5}$

$N_{cb} = 6.8^k$

$V_{cp} = 13.7^k$

$\phi V_{cp} = 0.7(13.7) = 9.6^k$

TENSION

D5.1

$\phi N_s = (0.75)(20.9) = 15.7^k$

D5.2

$N_{cb} = 6.8^k$ see above

$\phi N_{cb} = 0.55(6.8) = 3.74^k$

D5.3

$= 5200\left(\frac{1200}{2500}\right)^{0.7} = 3.111^k$

$\phi = 0.85$

$= 2.6$ ← CONTROLS

D5.4 N/A.

$DCR_T = \frac{2.6}{6.8} = 0.38$ $DCR_V = \frac{4}{2.6} = 1.5$ $DCR_T + DCR_V = 1.92$

// Provide anchors @ 12" o.c.

w/seismic further red of 0.75/1.0

Degenkolb

Subject:		Job Number:	Date
Job		By	Section
		Checked By	Page of

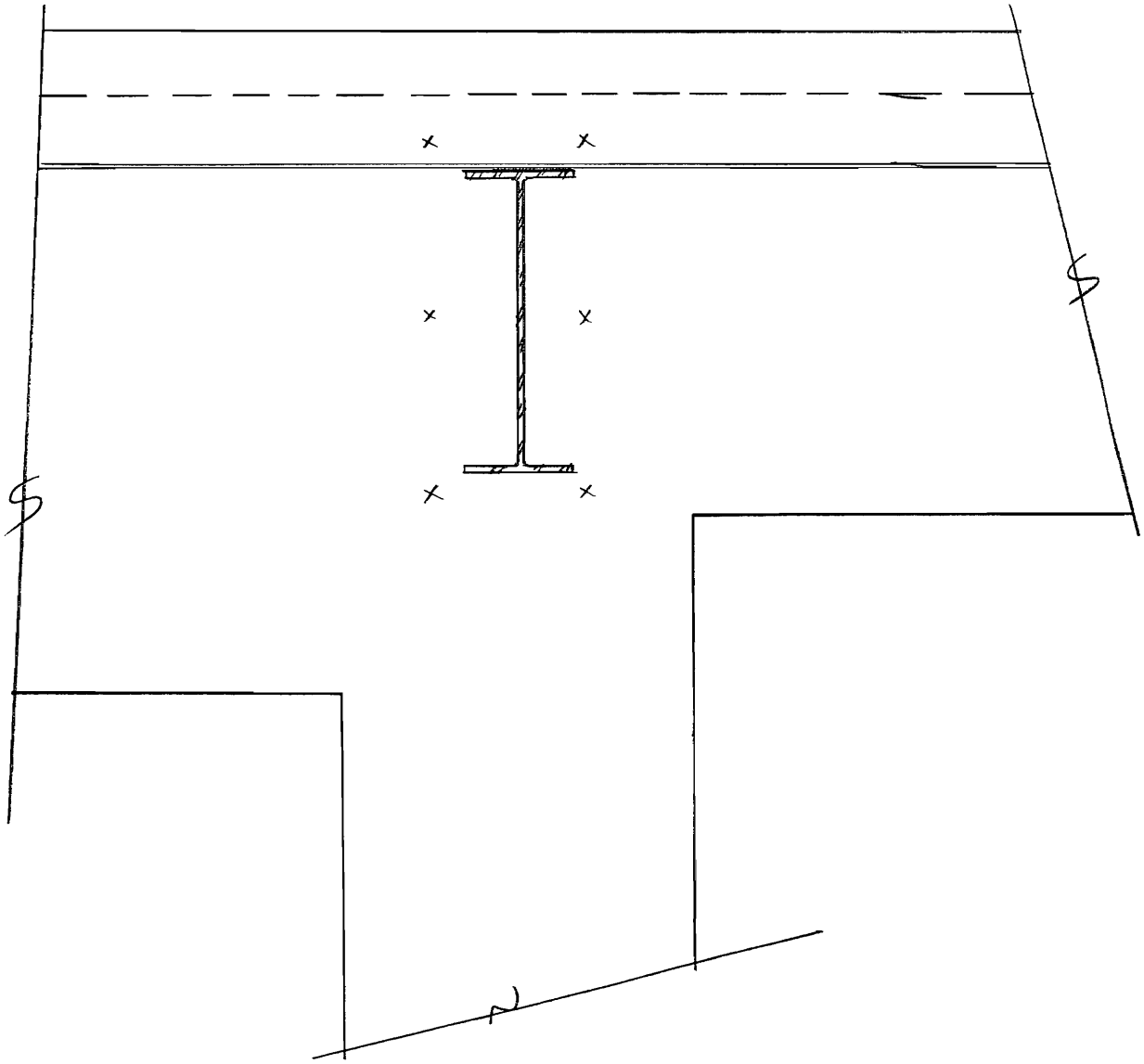

Degenkolb

Subject:	Job Number:	Date
Job	By	Section
	Checked By	Page of

FOR TYP. CONN AGAINST EXT. WALL
USE TUBECOL w/ (2) anchors @ 12" o.c.

USE SIMPSON STRONG BOLT
3/4" ϕ w/ 5 3/4" embed
$h_{ef} = 5''$

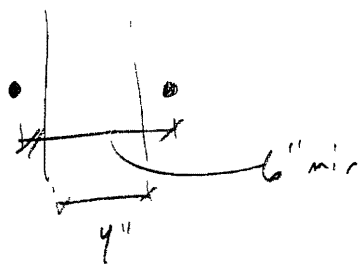

$A_{Nc} = [6 + 3(5)] \times 12 = 252 in^2$

$A_{Nco} = 225$

$N_b = 6.6 = 17\sqrt{1200} \times 5^{1.5}$

$N_{cbg} = 7.4^k$

$2N_{cbg} = 14.8^k$

$\times 0.7 \times 0.75 = 7.76$

$\frac{30^k}{7.76} = 4$ pairs of anchors min

Eccentricity is taken out by shear studs to conc. deck

Degenkolb

Subject:	Job Number	Date
Job	By	Section
	Checked By	Page 11 of

Transfer 21k/ft down to (E) shear wall

- shear studs => 2 per down flute w/ $Q_n = 17.2^k$

  $Q_{n\_TOT} = 34.4\ ^k/ft$ //OK

- WF Bm => OK

- WF Bm to #10 @ 12" o.c =>

  $V_n = 0.6 \times 60ksi \times 1\ in^2 = 36\ ^k/ft$

  $l_d = \frac{f_y \psi_t \psi_e \lambda}{20\sqrt{f'_c}} d_b$

  $f_y = 60ksi$
  $\psi_t = 1.0$
  $\psi_e = 1.0$
  $\lambda = 1.0$
  $f'_c = 4ksi$

  $l_d = 47 d_b$
  $= 47" = 4'-0"$

- (N) Conc to (E) Conc =>
  #4 @ 11" o.c. w/

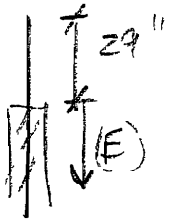

$l_d = \frac{f_y \psi_t \psi_e \lambda}{25\sqrt{f'_c}} d_b$

$f_y = 60$
$\psi_t = 1.0$
$\psi_e = 1.0$
$\lambda = 1.0$

$f'_c = 4000psi$

$l_d = 40 d_b = 20"$ //OK to be developed

Degenkolb

Subject	Job Number	Date
Job	By	Section
	Checked By	Page 11b of

Transfer $(21^k/ft)(22') = 462^k$ Total

Consider reduced length of Bm to Wall

$\ell = 22' - 5' = 17'$

$V_u = \frac{462^k}{17'} = 27.2^k/ft$

Stud Capacity = 26.1^k/stud

$\therefore\ s = 12''\left(\frac{26.1}{27.2}\right) = 11.5''$ Min

↳ use $s = 9''$ O.C

shear friction

$V_n = A_{vf} f_y \mu$

$\mu = 1.0(1.0) \rightarrow$ surface roughened

$V_n = (0.2)(1.0)(50\,ksi) = 10^k @ 11''$

$V_n = 10.9\ k/ft$ // N.G.

USE A PL w/ SIMPSON STRONG-BOLTS @ 6" o.c.

<u>Shear</u> 5/8" Ø 5 1/8" embed

D6.1 $\phi V_s \geq V_u$

$V_s = 10.5^k \Rightarrow$

D6.2 N/A

D6.3 Concrete Pryout

$V_{cp} = k_{cp} N_{cb}$ (2.0)

$N_{cb} = \frac{A_{Nc}}{A_{Nco}} \psi_{ed,N}\ \psi_{c,N}\ \psi_{cp,N}\ N_b$ (1.0, 1.4, 1.0)

$N_b = 17\sqrt{1200} \cdot 5.125^{1.5} = 6.83^k$

$A_{Nc} = (6 + 1.5(5.125)) * 12 = 164.$

$A_{Nco} = 236.4\ in^2$

$N_{cb} = 6.6^k @ 12" o.c.$

// N.G.

w/ $V_{cp} = 13.3\ k/ft$

TRY THRU BOLTS

$N_{cb} \Rightarrow$

$A_{NC} = (6 + 1.5(8)) \times 12 = 216$

$N_b = 17\sqrt{1200}\ 8^{1.5} = 13.3^k$

$V_{cp} = 34^k/ft.$

USE 3/4" Ø THRU BOLT @ 6" o.c.

THRU 1/2" PL EA. SIDE

TRY 3/4" Ø @ 12" o.c.

$N_b = 13.3^k$

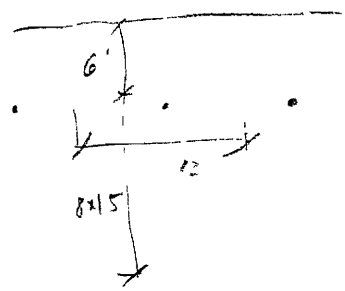

$A_{NC} = (6 + 8 \times 1.5) \times 12 = 216$

$A_{NCO} = 236.4$

$V_{cp} = 34^k/ft$

$0.442 \times 0.6 \times 36 \times 2 = 19^k$ // ok w/ exp. strength of bolt

double shear

Degenkolb

Subject: 2nd Flr Infill	Job Number A743700 7	Date 2/26/08	
Job Fire Station 1	By DAL	Section	
	Checked By	Page	of

Check (E) Bm @ connection of (N) to (E) slab

(E) Conc Bm 14/22 (2B10)

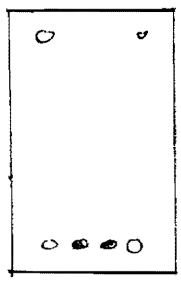

2#7 Top
2#8 bottom } Straight

2#8 Bent

$f'_c = 1200$ psi
$f_y = 50$ ksi

$\phi M_n^+ = 205^{k'}$
$\phi M_n^- = 188^{k'}$ } From RC-Section

DL

4" slab w/ 8.5' Span => $w = (150)(4/12)(\frac{8.5}{2}) = 213$ plf

Closer to 7'

New Flr. w/ ±8' span => $w = (45psf)(\frac{8'}{2}) = 180$ plf

Self wt => $w = (150)(\frac{14)(22)}{144} = 320$ plf + 8plf angle

Total = 720 plf

LL

Conservative

office space => $(100psf)(\frac{8.5' + 8'}{2}) = 825$ plf

Total = 1.2(720) + 1.6(825) = 2,184 plf (1.6 klf w/ 50psf flr load)

ANALYSIS SUMMARY

Project	Fire Station 1
Engineer	DAL
Design code	ACI 318-95
Compression face	North
Time of analysis	2/26/2008 11 18 27 AM

Factored Moment Resistance, ØMn (North-South)

Total area	2 139 ft^2
Centroid from origin (0,0)	11 00 in
Moment of inertia, Ix	12422 7 in^4
Capacity reduction factor, Ø	0 90
Axial load resistance, ØPn (ØMn=0)	369 4 Kips
Moment resistance, ØMn (Pu=0 0 Kips)	204 8 Kips*ft
Cracking moment, Mcr	24 5 Kips*ft
Distance to N A , c	7 77 in

ANALYSIS SUMMARY

Project	Fire Station 1
Engineer	DAL
Design code	ACI 318-95
Compression face	South
Time of analysis	2/26/2008 11 17 01 AM

Factored Moment Resistance, ØMn (South-North)

Total area	2 139 ft^2
Centroid from origin (0,0)	11 00 in
Moment of inertia, Ix	12422 7 in^4
Capacity reduction factor, Ø	0 90
Axial load resistance, ØPn (ØMn=0)	369 4 Kips
Moment resistance, ØMn (Pu=0 0 Kips)	187 7 Kips*ft
Cracking moment, Mcr	24 5 Kips*ft
Distance to N A , c	4 82 in

Degenkolb

Subject: 2nd Flr Infill	Job Number A7437007	Date 2/26/08	
Job FS1	By DAL	Section	
	Checked By	Page	of

$M_u^+ = \frac{(2.2^{k}/ft)(22.5')^2}{11} = 101^{k'} < \phi M_n^+$ ok

$M_u^- = \frac{(2.2^{k}/ft)(22.5)^2}{9} = 124^{k'} < \phi M_n^-$ ok

Check Shear

$V_c = 2\sqrt{1200}(14)(20) = 19.4^k$

V_s Varies w/ Reinf => Use #4 Stirrup @ 14" O.C extending to 4', 18', 32' from end

$V_s = (0.2^{in^2} \times 2)(50ksi)\left(\frac{20}{14}\right) = 28.6^k$

$\phi V_n = (0.75)(48^k) = 36^k$ out to 3' from end

$\phi V_n = (0.75)19.4^k = 14.5^k$

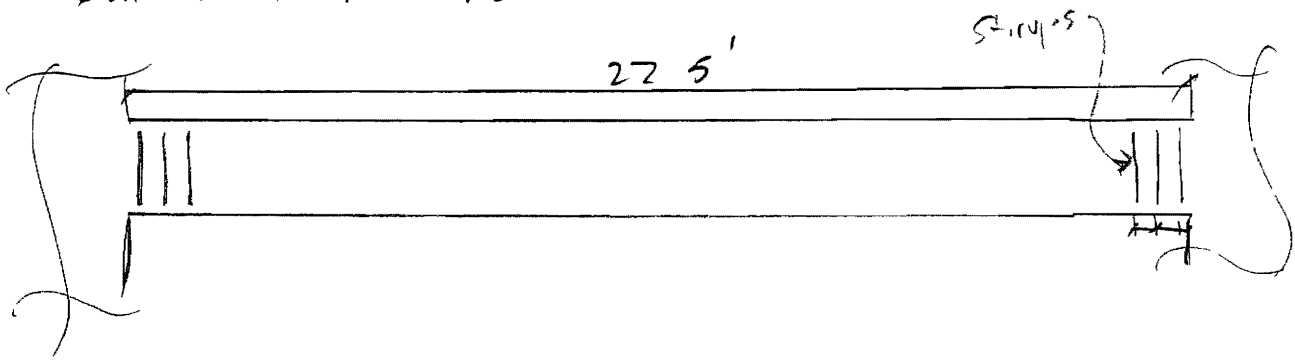

$V_u = \frac{(2.2\,klf)(22.5)}{2} = 25^k < \phi V_n$ @ end ok

$V_u = \frac{(2.2)(22.5-6)}{2} = 18.2^k$ based on Conservative 100psf Flr LL.

↳ $18.2\left(\frac{16}{22}\right) = 13.2^k < \phi V_n$ w/ 50psf LL

ok

Degenkolb

Subject: 2nd Flr Infill		Job Number A7-37007	Date 2/26/08
Job ESI		By DAL	Section
		Checked By	Page of

Check (E) Bm along Grid 3 btwn (C) and (D)

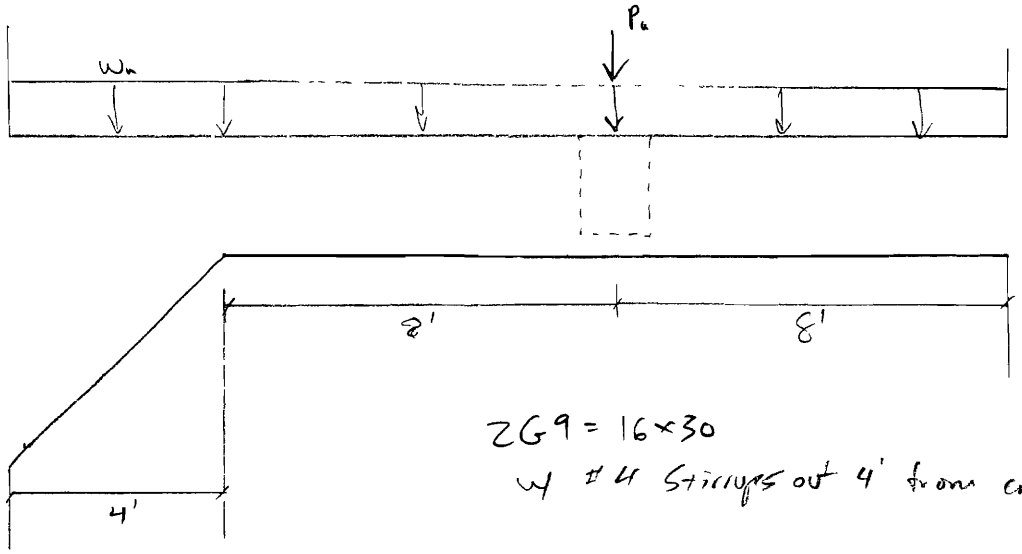

2G9 = 16×30
w/ #4 Stirrups out 4' from crl's

DL
$w = \frac{(5)}{12}(150)(5.5') = 345 plf$

LL
$w = (100 psf)(5.5') = 550 plf$

$w_u = 1.2(345) + 1.6(550) = 1.3 klf$
$P_u = 25^k$ from 2B10

$M_u^+ = \frac{wl^2}{14} + \frac{Pl}{4} = 162^{k'} < 369^{k'}$ ok

$M_u^- = \frac{wl^2}{10} + \frac{Pl}{8} = 115^{k'} < 282^{k'}$ ok

$V_u = 1.3(10') + 25/2 = 26^k$ @ end

$\phi V_c = 0.75(2\sqrt{3000})(16)(28) = 23^k$ ok by Inspection w/ Stirrups

ANALYSIS SUMMARY

Project	Fire Station 1
Engineer	DAL
Design code	ACI 318-95
Compression face	North
Time of analysis	2/26/2008 6 01 52 PM

Factored Moment Resistance, ØMn (North-South)

Total area	3 333 ft^2
Centroid from origin (0,0)	15 00 in
Moment of inertia, Ix	36000 0 in^4
Capacity reduction factor, Ø	0 90
Axial load resistance, ØPn (ØMn=0)	521 0 Kips
Moment resistance, ØMn (Pu=0 0 Kips)	369 3 Kips*ft
Cracking moment, Mcr	52 0 Kips*ft
Distance to N A , c	9 64 in

ANALYSIS SUMMARY

Project	Fire Station 1
Engineer	DAL
Design code	ACI 318-95
Compression face	South
Time of analysis	2/27/2008 11 33 46 AM

Factored Moment Resistance, ØMn (South-North)

Total area	3 333 ft^2
Centroid from origin (0,0)	15 00 in
Moment of inertia, Ix	36000 0 in^4
Capacity reduction factor, Ø	0 90
Axial load resistance, ØPn (ØMn=0)	452 4 Kips
Moment resistance, ØMn (Pu=0 0 Kips)	282 4 Kips*ft
Cracking moment, Mcr	52 0 Kips*ft
Distance to N A , c	10 90 in

Section D: Roof Framing

Degenkolb

Subject ROOF RE-FRAMING		Job Number	Date
Job		By JBE	Section
		Checked By	Page 1 of

LOADS

3 1/4" LWC over 3" MTL DECK

Conc. $\frac{3\frac{1}{4}" + 1.5"}{12} \times 115pcf = 45.5psf$

Deck: = 3 psf

ROOFING = 5psf

CEILING = 3psf

STEEL = 5psf

MISC = 5psf

TOTAL DL = 66.5psf

PRE-COMP DL = 45.5 + 3 + 5 = 53.5psf

LL ROOF = 20 psf

SNOW

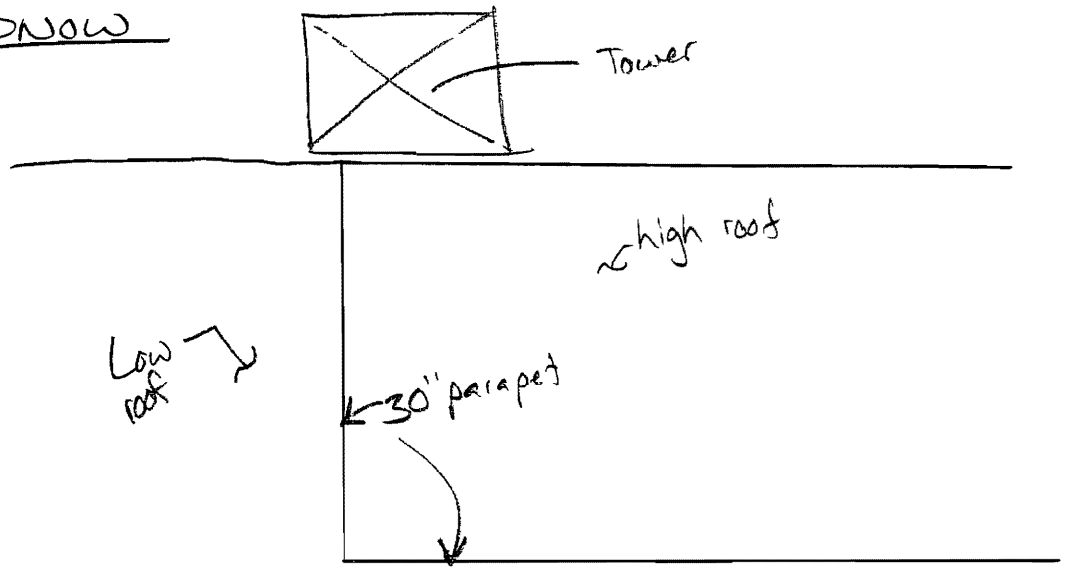

$h_c =$
$h_b =$

DRIFT ON LOWER ROOF

$\gamma = 0.13 p_g + 14 = 17.25$ pcf
w/ $p_g = 25$ psf

$h_b = \frac{25}{17.25} = 1.45'$

Parapet

$h_c = 30'' - 1.45' = 1.05$

$\frac{h_c}{h_b} = 0.72 \Rightarrow$ Cannot ignore drifts

SNOW LOAD

$P_f = 0.7 C_e C_t I p_g$
$p_g = 25$ psf, $C_e = 0.9$, $C_t = 1.0$, $I = 1.2$
$S = 19$ psf < 25 psf $\Leftarrow$ Controls

DRIFT @ TOWER

$h_d = 0.43 \sqrt[3]{l_u} \sqrt[4]{p_g + 10} - 1.5$

$p_g = 25 psf$

leeward $l_u = 21.8'$ slength of upper roof

$h_d = 1.42'$ ← CONTROLS

windward $l_u = 52.6$

$h_d = \frac{3}{4} h_{eqn} = 1.44$

$h_d < h_c \Rightarrow w = 4 h_d = 5.76'$

$p_d = h_d \gamma = 1.44(17.25)$
$= 25 psf$

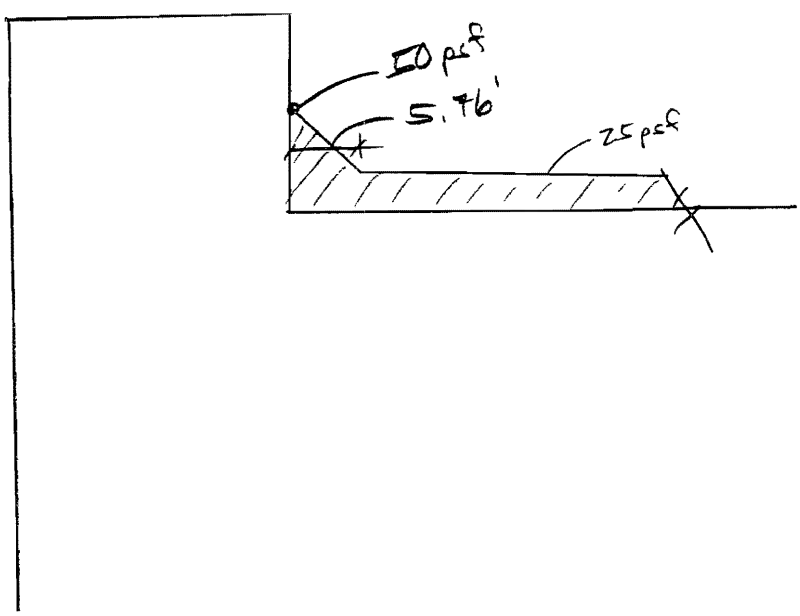

Degenkolb

Subject:		Job Number	Date
Job		By JBE	Section
		Checked By	Page 4 of

DRIFT @ PARAPET

WINDWARD ONLY =>

$l_u = 52.6'$ in one direction

$h_d = 1.44$ → from tower drift calc
→ for East parapet
same as tower drift

$l_u = 89'$ in N-S dir.

$h_d = 2.0$ ⇐ for South parapet

$h_d < h_c \Rightarrow w = 4 h_d = 8'$

$p_d = h_d \gamma = 34.5 psf$

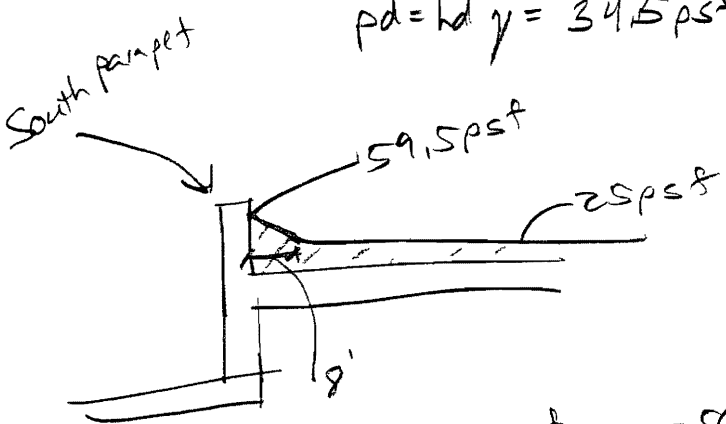

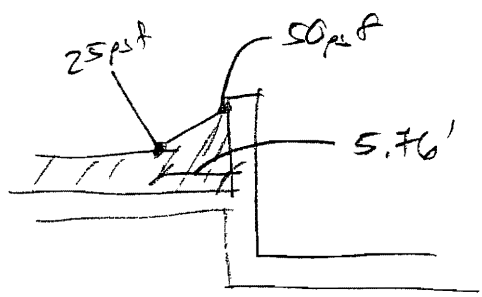

Subject:	Job Number	Date
Job	By JBE	Section
	Checked By	Page 5 of

Large Mech Unit

$Wt = 9^k$,

USE => 15^k TO BE CONS.

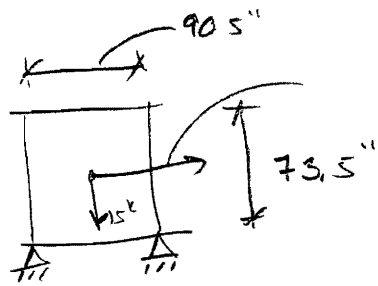

$$F_p = \frac{0.4 a_p S_{ps} W_p}{\left(\frac{R_p}{I_p}\right)} \left(1 + 2\frac{z}{h}\right)$$

z = h @ rf

$S_{DS} = 0.73$

$a_p = 1.0$ rigid

$R_p = 2.5$

$I_p = 1.5$

$F_p = 0.53 W_p$

// No O.T. => No Tension => w/ curb could have T.

$$C = \frac{0.53(15^k) \times \frac{73.5}{2} + 15^k\left(\frac{90.5}{2}\right)}{90.5} = 10.7k$$

over 362.5"

$C = 0.355$ plf => CONS.

APPLY LINE LOADS OF $\frac{15^k}{2 \times 362.5"} = 250$ plf

Catalog Number EVEDEED434T000

C:\dotnetnuke\ervcurbtiffs\Trane\EVE-PRC610-CRB.tif

ERV + RTU-Z curb.pdf

SUBMITTAL MicroMetl

FORM NO 4538-1P | DATE 5/07

Down Discharge Combo-Curb for Trane Precedent YSC,YHC,TSC,THC 072A,090A,092A,102-120, WSC 072A,090A,120A Units Mated to MicroMetl ERV E Cabinet

Part Number **EVE-PRC610-CRB**

SUBMITTED TO _____
COMPANY _____
DRAWN BY E. SALAZAR
JOB NAME _____
EQUIPMENT _____
NOTES _____

FEATURES

Roofcurb sides and ends are minimum 16ga galvanized steel (058 min)
- Gasketing package provided

Full perimeter wood nailer Nailer extends around transition on down discharge applications
Insulated transition
Completely welded assembly

Approx. Weight 556 909 lbs

- HV CONFIGURATION

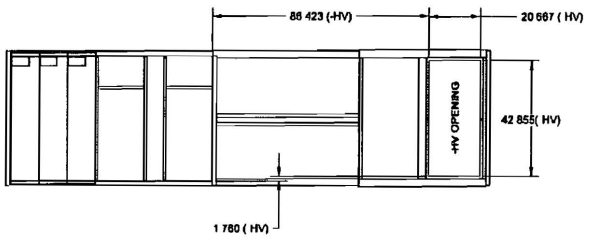

Horizontal supply/vertical return (-HV suffix) is optional

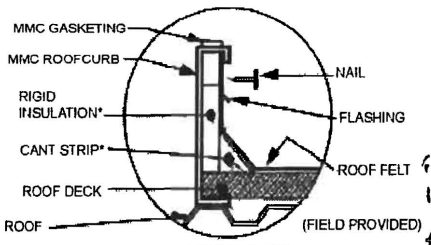

ROOFING DETAIL

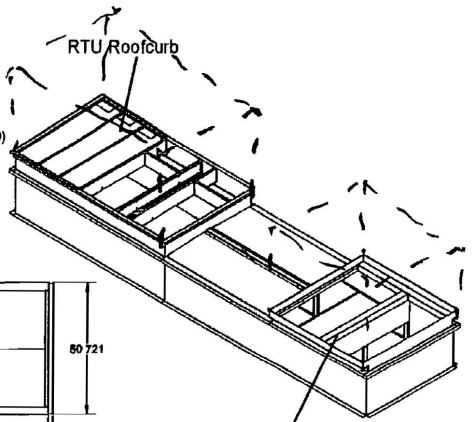

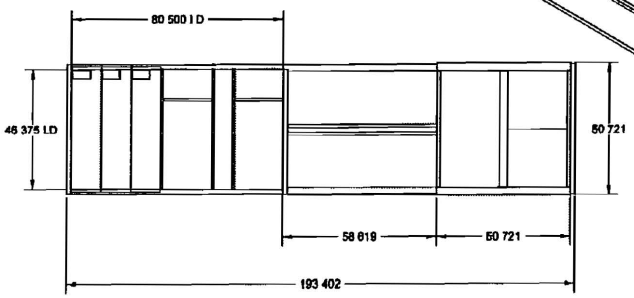

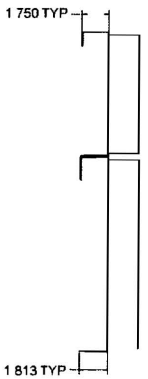

CURB CROSSECTION DETAILS

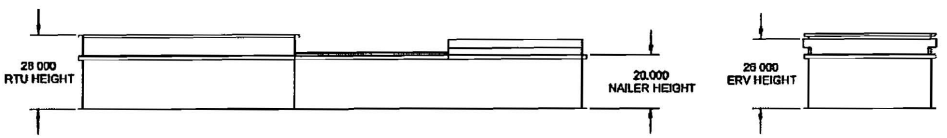

NOTES

1) Adjustable pitch/adjustable height curbs and taller curbs are available as specials
2) The standard MicroMetl curbs do not have service plate holes If they are required you must specify on the order
3) Return air ductwork sits 12 below bottom of curb (Stub duct provided)

THIS DOCUMENT IS THE PROPERTY OF MICROMETL CORPORATION AND IS DELIVERED UPON THE EXPRESS CONDITION THAT THE CONTENTS WILL NOT BE DISCLOSED OR USED WITHOUT MICROMETL S WRITTEN CONSENT

MICROMETL CORP 3035 NORTH SHADELAND AVENUE SUITE 300 INDIANAPOLIS IN 46226 1 800 662 4822 MICROMETL SPARKS 202 SOUTH 18TH ST SPARKS NV 89431 1 800 884 4662

RTU-2.pdf 01222

Tag Data - 3-10 Ton R410A PKGD Unitary Gas/Electric Rooftop (Qty 1)

Item	Tag(s)	Qty	Description	Model Number
A1	RTU	1	3-10 Ton R410A PKGD Unitary Gas/Electric	YSC072E4RMA--D1B000000000

Product Data - 3-10 Ton R410A PKGD Unitary Gas/Electric Rooftop

Item A1 Qty 1 Tag(s) RTU

DX cooling, gas heat
Standard efficiency
Convertible configuration
6 Ton
Major design sequence
460/60/3
Microprocessor controls 3ph
Medium gas heat 3ph
Economizer Dry Bulb 0-100% with Barometric Relief
Oversize motor
Standard panel/2 in pleated filters

Performance Data - 3-10 Ton R410A PKGD Unitary Gas/Electric Rooftop

Tags	RTU
Airflow Application	Downflow
Airflow cfm	2650
Cooling Entering DB (F)	80 00
Cooling Entering WB (F)	64 00
Ent Air Relative Humidity (%)	41 56
Ambient Temp (F)	95 00
Evap Coil Leaving Air Temp (DB) (F)	57 60
Evap Coil Leaving Air Temp (WB) (F)	54 43
Cooling Leaving Unit DB (F)	58 72
Cooling Leaving Unit WB (F)	54 89
Gross Total Capacity (MBh)	74 00
Gross Sensible Capacity (MBh)	64 11
Gross Latent Capacity (MBh)	9 89
Net Total Capacity (MBh)	70 80
Net Sensible Capacity (MBh)	60 91
Net Sensible Heat Ratio (Number)	0 86
Heating EAT (F)	60 00
Heating LAT (F)	94 30
Heating Delta T (F)	34 30
Input Heating Capacity (MBh)	120 00
Output Heating Capacity (MBh)	97 20
Output Heating Cap w/Fan (MBh)	100 63
Design ESP (in H2O)	0 75
Component SP (in H2O)	0 23
Field supplied drive kit required	None
Indoor mtr operating power (bhp)	1 35
Indoor RPM (rpm)	973
Indoor Motor Power (kW)	1 01
Outdoor Motor Power (kW)	0 54
Compressor Power (kW)	5 20
System Power (kW)	5 81
SEER/EER @ ARI (EER)	11 2
IPLV @ ARI (IPLV)	0 0
MCA (A)	18 20
MOP (A)	25 00
Compressor 1 RLA (A)	10 60
Compressor 2 RLA (A)	0 00
Evaporator fan FLA (A)	2 50
Condenser fan FLA (A)	2 50

Tags	RTU
Evaporator face area (sq ft)	9 89
Evaporator rows (Each)	3 00
Evaporator fin spacing (Per Foot)	192
Evaporator face velocity (ft/min)	268
Min unit operating weight (lb)	915 0
Max unit operating weight (lb)	1277.0
Fan motor heat (MBh)	3 20
Dew Point (F)	52 17

MicroMelt Corporation AIRX FRC DESIGN POINT ANALYSIS

DESIGN CONDITIONS	Dry Bulb F	Wet Bulb F	Enthalpy, Btu/lb
SUMMER Outdoor	95 00	69 00	32.98
SUMMER, Indoor	75 00	62 00	27 73
WINTER Outdoor	22 00	21 00	7 45
WINTER Indoor	72.00	54 00	22.50

Project Unit 1	Model Number EVED	
SUPPLY AIR FLOW RATE, cfm	2150	2150
EXHAUST AIR FLOW RATE, cfm	2150	2150
Latent Effectiveness	69 72%	69 68%
Sensible Effectiveness	75 58%	75 63%
Measured Effectiveness (S/W)	75 3%	74.5%

SUPPLY AIR CONDITIONS	Summer	Winter
Dry Bulb Temperature, F	79 86	58 92
Wet Bulb Temperature, F	63 81	46.52
Enthalpy Btu/lb	29 02	18 38
Relative Humidity %	41 4	37 0

DESIGN LOADS, Btu/h	Summer	Winter
Outside Air Sensible	45,217	117 985
Outside Air Latent	4 231	29 920
Outside Air Total	49 448	147,905

RECOVERED LOADS, Btu/h	Summer	Winter
Sensible Recovered	34 174	86 986
Latent Recovered	3 000	20,242
Total Recovered	37 174	107 227

Net OA Load	12 275	40 678
INSTALLED HVAC REDUCTION		
COOLING, Tons	3 10	
HEATING Btu/h		107,227

Unit Dimensions - 3-10 Ton R410A PKGD Unitary Gas/Electric Rooftop
Item A1 Qty 1 Tag(s) RTU

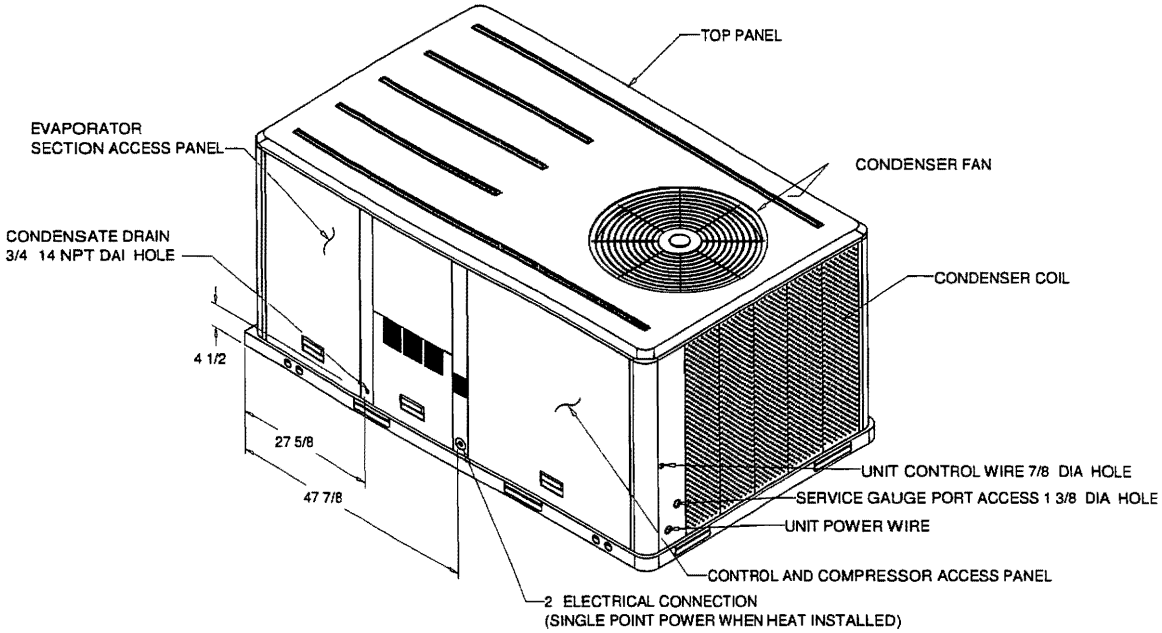

ISOMETRIC-PACKAGED COOLING

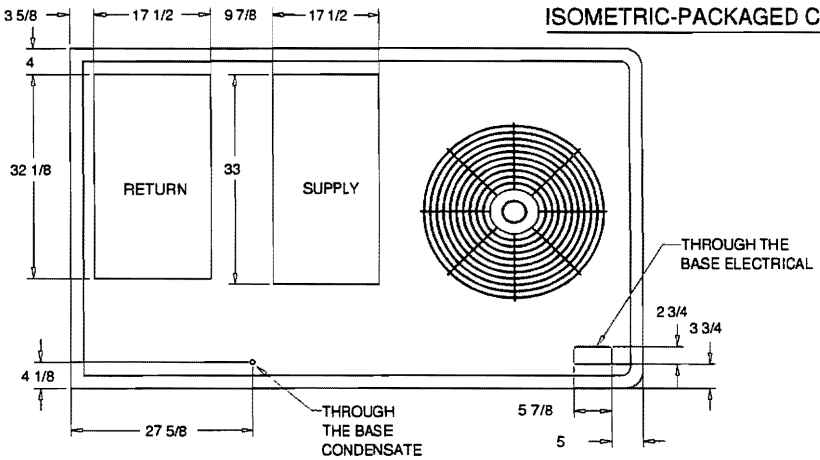

DOWNFLOW-PENETRATION

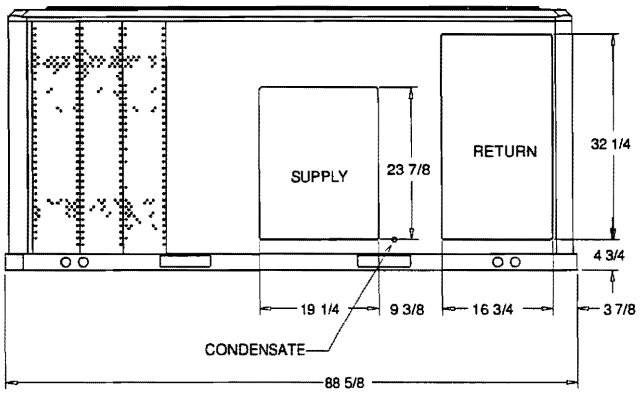

HORIZONTAL-PENETRATION

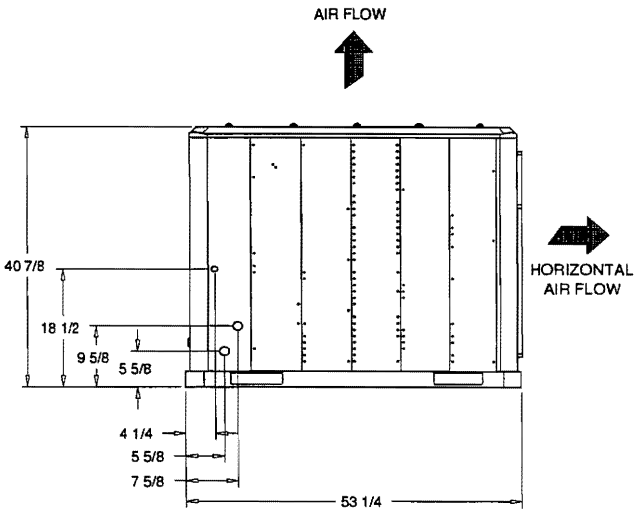

RIGHT-PACKAGED COOLING

ERV.pdf
0225

Catalog Number EVEDEED434T000

EVE Cabinet - Clearances

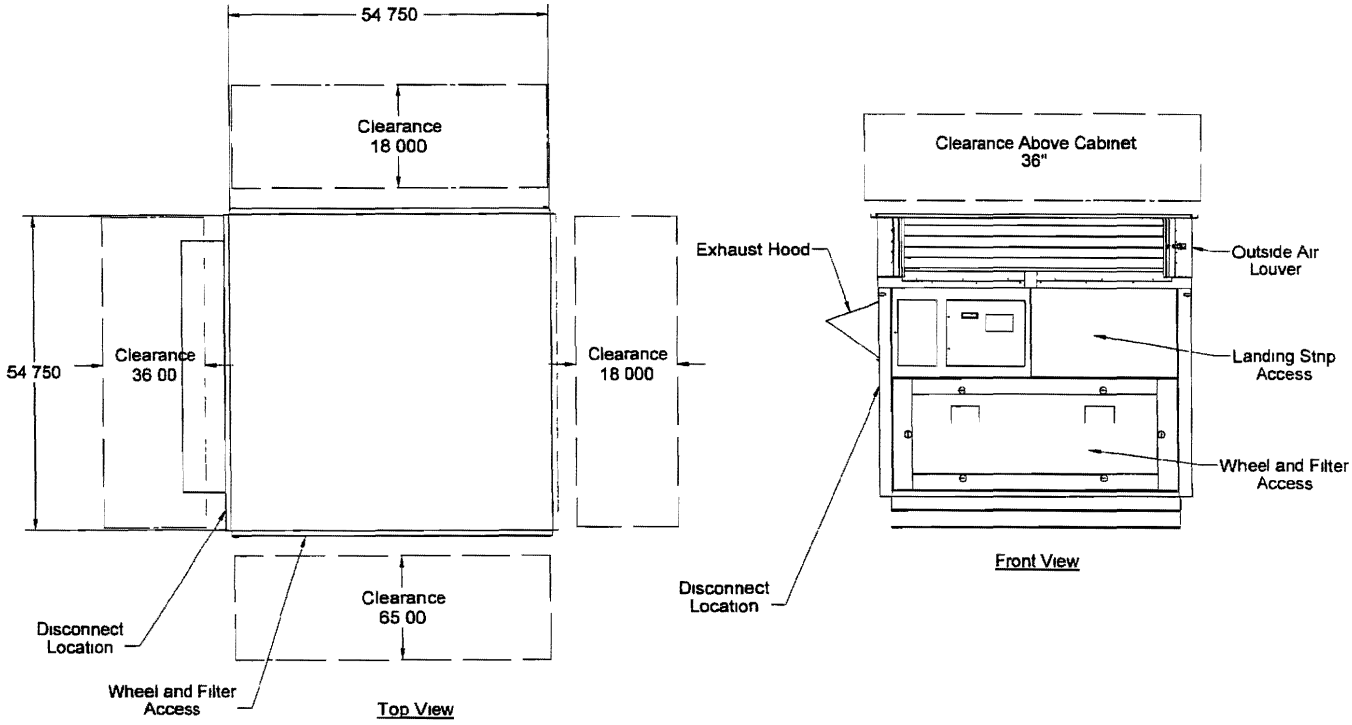

EVE Cabinet - Down discharge with outside air hoods

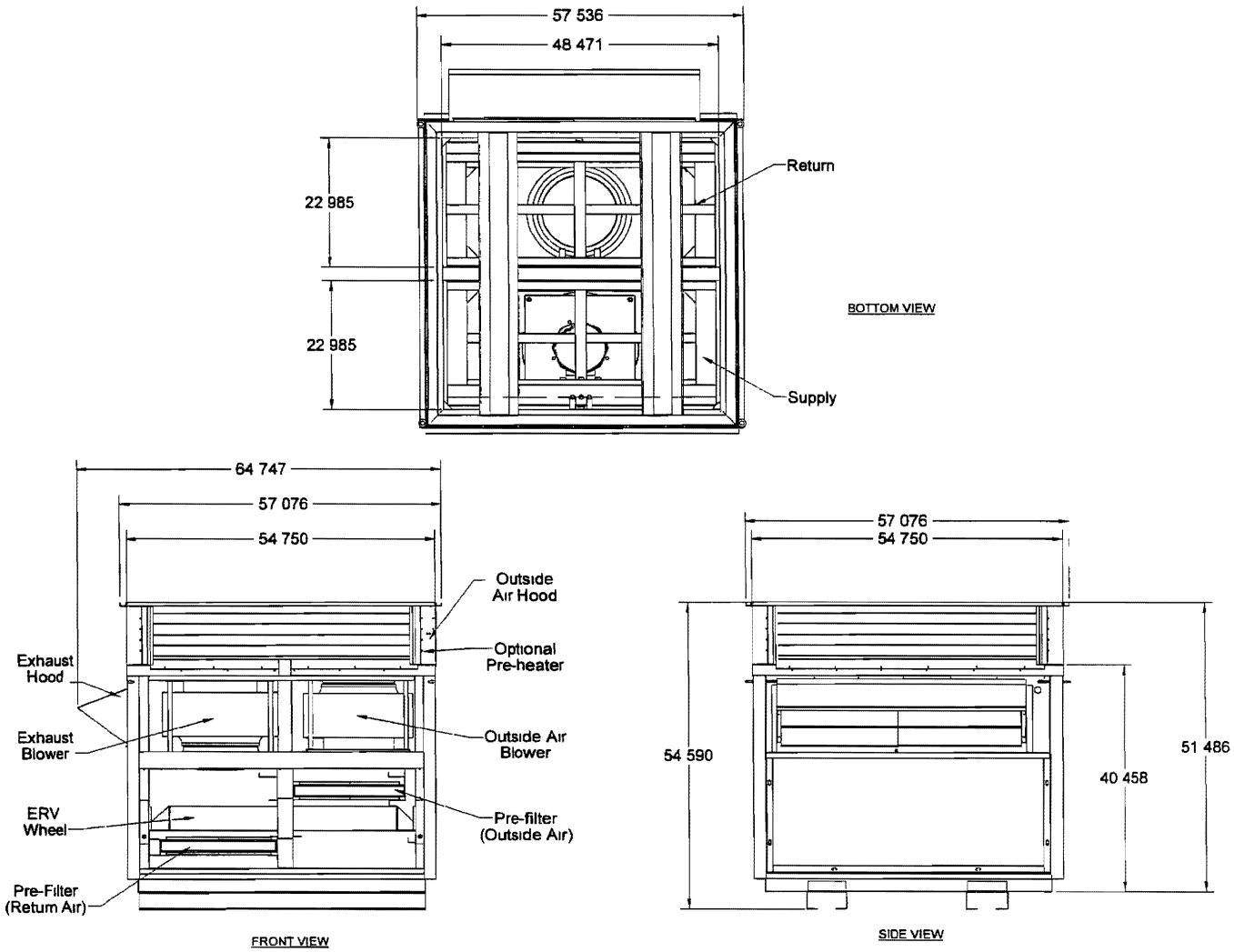

c \dotnetnuke\submittaldrawings\cabED tif

Catalog Number	EVEDEED434T000
Electrical Data	
Voltage	460v
Phase	Three Phase
Supply Blower Horsepower	3 62
Return Blower Horsepower	3 62
Wheel Blower Horsepower	0 19
FLA	7 05
MCA	8 82
MOP	11 29
Weight	646 lbs

Options Included in Cabinet

0-No Disconnect

0-No Monitoring Device

0-No Frost Control

RTU-1 ver 2.pdf

0228

Tag Data - Commercial Rooftop Air Conditioning Units (Midrange) (Qty 1)

Item	Tag(s)	Qty	Description	Model Number
A1	RTU-1	1	20-75 Ton Packaged Industrial Rooftop	SFHFF404

Product Data - Commercial Rooftop Air Conditioning Units (Midrange)

Item A1 Qty 1 Tag(s) RTU-1

DX Cooling With Natural Gas Heat
40 Ton Unit
460 Volt-60 Hertz-3 Phase
Limited modulating Hi gas heat capacity
100% Exhaust - 7 1/2 Hp with Statitrac
700 rpm - Exhaust fan
Throwaway filters
30 Hp - Supply motor
1100 rpm - Supply fan
0-100% Economizer
Economizer Control w/dry bulb
2 00" [51mm] Spring isolators
Supply and Exhaust Fan with VFD and Bypass
Standard ambient control
High capacity evaporator coil

Performance Data - Commercial Rooftop Air Conditioning Units (Midrange)

Tags	RTU-1
Design airflow (cfm)	18000
Exhaust fan airflow (cfm)	16000
Cooling EDB (F)	79 00
Cooling EWB (F)	64 00
Ent air relative humidity (%)	44 02
Ambient temp (F)	95 00
Leaving Coil DB (F)	54 80
Leaving Coil WB (F)	54 46
Leaving Unit DB (F)	58 42
Leaving Unit WB (F)	55 92
Gross total capacity (MBh)	515 55
Gross sensible capacity (MBh)	484 87
Gross latent capacity (MBh)	30 68
Net total capacity (MBh)	443 12
Net sensible capacity (MBh)	412 44
Net sensible heat ratio (%)	93 08
Input htg capacity (MBh)	850 00
Output htg capacity (MBh)	697 00
Output htg capacity w/fan (MBh)	761 15
Heating EAT (F)	60 00
Heating LAT (F)	95 69
Heating delta T (F)	35 69
Supply duct static pressure (in H2O)	2 00
Return duct static pressure (in H2O)	1 00
Component S P drop (in H2O)	1 34
Total static pressure (in H2O)	4 34
Supply motor BHP calculated (bhp)	25 19
Supply fan RPM calculated (rpm)	1135
Exhaust static pressure (in H2O)	1 00
Exhaust motor BHP calculated (bhp)	6 67
Exhaust fan RPM calculated (rpm)	689
System power (kW)	65 75
EER @ ARI (EER)	10 0
IPLV @ ARI (IPLV)	12 4
Minimum circuit ampacity (A)	138 68

Tags	RTU-1
Maximum overcurrent protection (A)	175 00
Minimum disconnect switch size (A)	148 00
Recommended dual element (A)	150 00
Compressor 1 count (Each)	4 00
Compressor 1 RLA (A)	18 20
Supply fan motor FLA (A)	37 50
Supply fan count (Each)	1 00
Condenser fan FLA (A)	7 20
Exhaust fan motor FLA (A)	9 80
Other FLA (A)	2 00
Evaporator face area (sq ft)	32 50
Evaporator fin spacing (Per Foot)	148
Evaporator rows (Each)	4 00
Condenser rows (Each)	3 00
Condenser fin spacing (Per Foot)	144
Min unit operating weight (lb)	6260 0
Max unit operating weight (lb)	9056 0
Fan motor heat (MBh)	72 43
Discharge duct - 63 Hz (dB)	96
Discharge duct - 125 Hz (dB)	94
Discharge duct - 250 Hz (dB)	88
Discharge duct - 500 Hz (dB)	87
Discharge duct - 1 kHz (dB)	84
Discharge duct - 2 kHz (dB)	81
Discharge duct - 4 kHz (dB)	78
Discharge duct - 8 kHz (dB)	75
Return duct - 63 Hz (dB)	87
Return duct - 125 Hz (dB)	88
Return duct - 250 Hz (dB)	81
Return duct - 500 Hz (dB)	77
Return duct - 1 kHz (dB)	75
Return duct - 2 kHz (dB)	73
Return duct - 4 kHz (dB)	68
Return duct - 8 kHz (dB)	65
Run acoustics	Yes
Exhaust fan - 63 Hz (dB)	78
Exhaust fan - 125 Hz (dB)	78
Exhaust fan - 250 Hz (dB)	76
Exhaust fan - 500 Hz (dB)	75
Exhaust fan - 1 kHz (dB)	72
Exhaust fan - 2 kHz (dB)	66
Exhaust fan - 4 kHz (dB)	63
Exhaust fan - 8 kHz (dB)	59

Unit Dimensions - Commercial Rooftop Air Conditioning Units (Midrange)
Item A1 Qty 1 Tag(s) RTU-1

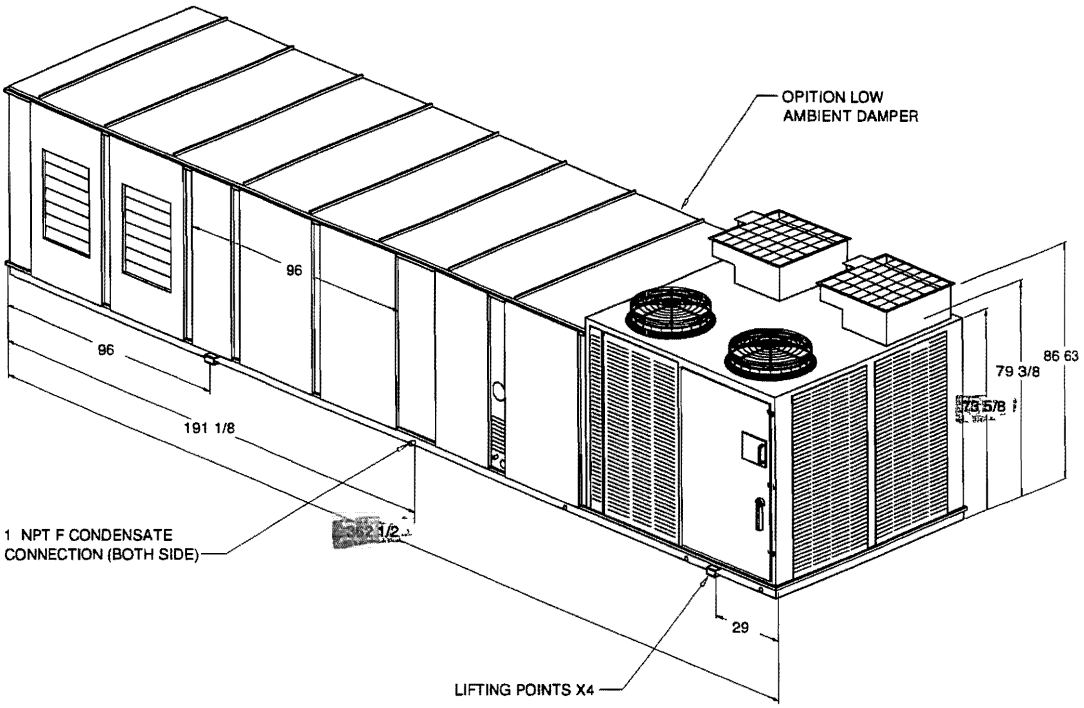

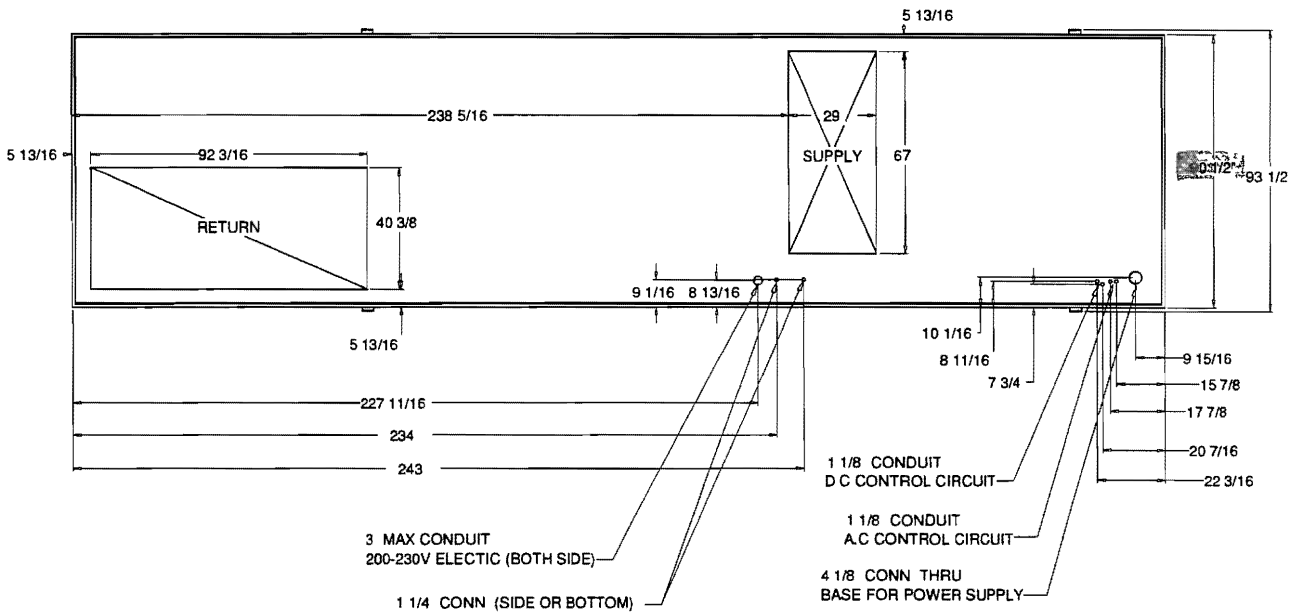

Unit Dimensions - Commercial Rooftop Air Conditioning Units (Midrange)
Item A1 Qty 1 Tag(s) RTU-1

TYPICAL ROOF CURB AND BASE PAN DETAIL

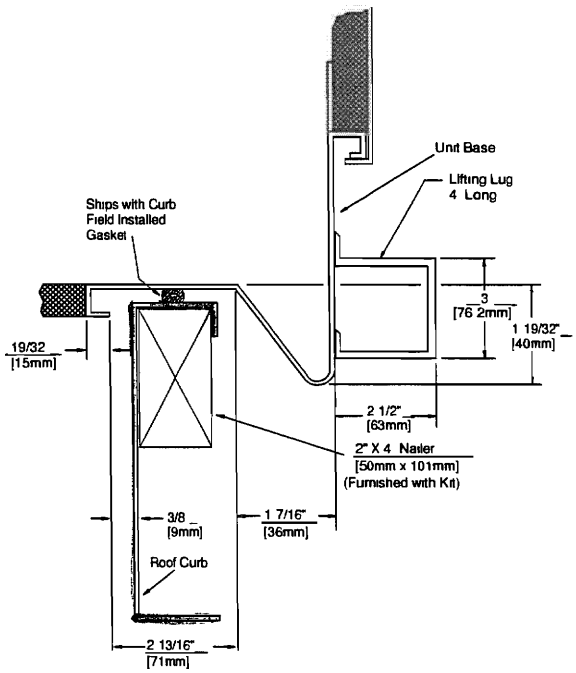

TYPICAL PEDESTAL AND BASE PAN DETAIL

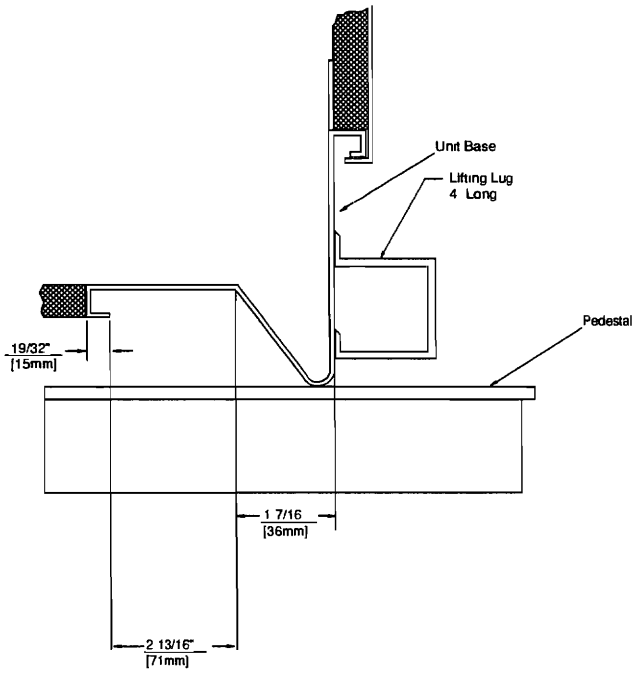

Unit Dimensions - Commercial Rooftop Air Conditioning Units (Midrange)
Item A1 Qty 1 Tag(s) RTU-1

NOT TO SCALE

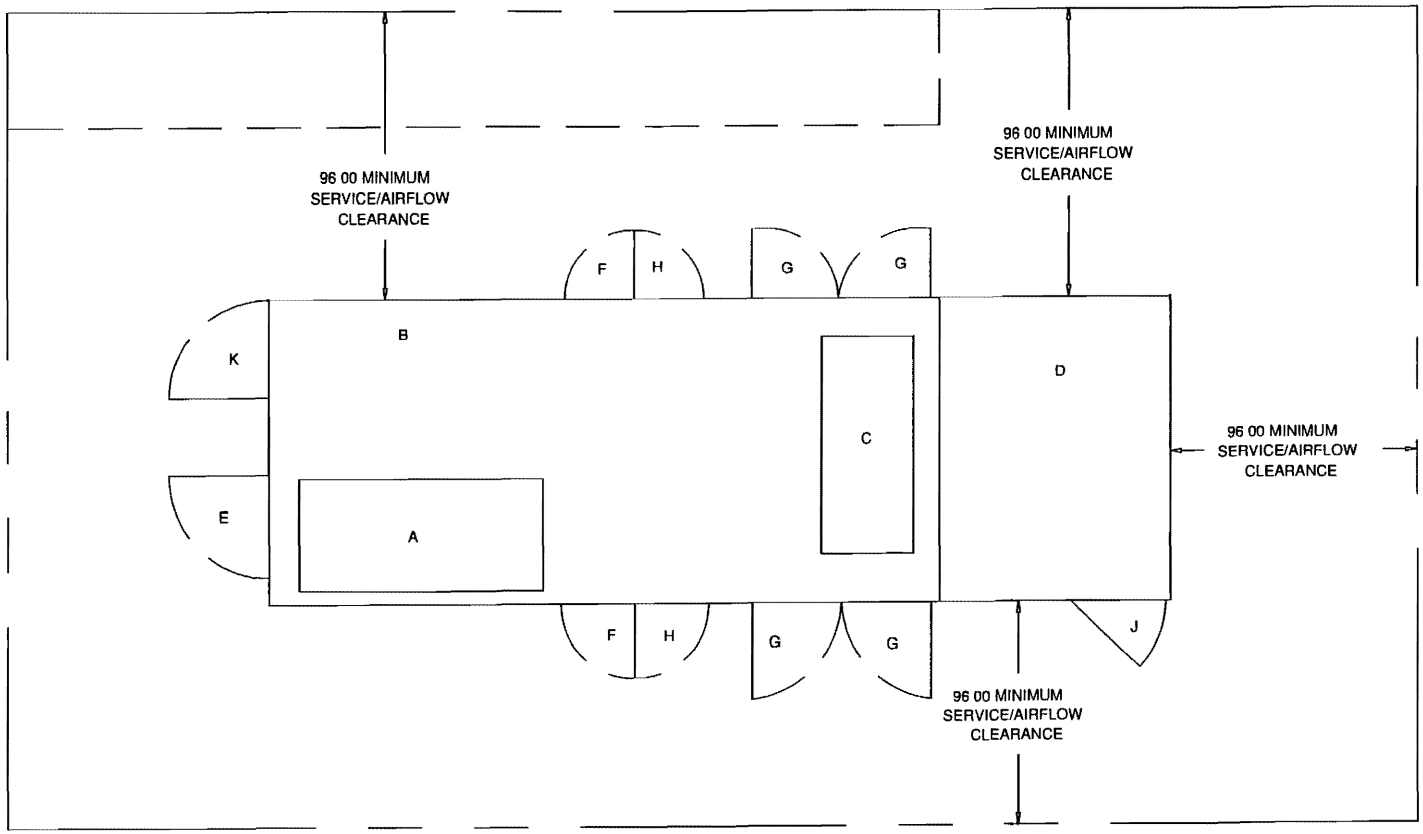

LEGEND

A = RETURN AIR OPENING
B = FRESH AIR INTAKE
C = SUPPLY AIR OPENING
D = CONDENSER SECTION
E = OPTIONAL 34 75 ACCESS DOOR (180 DEG SWING) EXHAUST
F = HINGED 34 75 FILTER ACCESS DOOR (180 DEG SWING)
G = HINGED 34 75 HEATER ACCESS DOOR (180 SWING) OPTIONAL
H = HINGED 34 75 SUPPLY FAN ACCESS DOOR (180 SWING)
J = HINGED 28 5 CONTROL PANEL DOOR (180 SWING)
K = VFD ACCESS PANEL

NOTES
1 PROVIDE UNRESTRICTED CLEARANCE ABOVE THE CONDENSER FANS
2 A MINIMUM CLEARANCE OF 28 5 IS REQUIRED TO OPEN THE HINGED CONTROL PANEL DOORS ON 20 THRU 75 TON UNITS
3 E THROUGH K ARE ACCESS ARES THEY MAY BE REMOVABLE ONLY PANELS OR HINGED DOOR DEPENDING ON UNIT OPTIONS SELECTED

0232

Weight, Clearance & Rigging Diagram - Commercial Rooftop Air Conditioning Units (Midrange)
Item A1 Qty 1 Tag(s) RTU-1

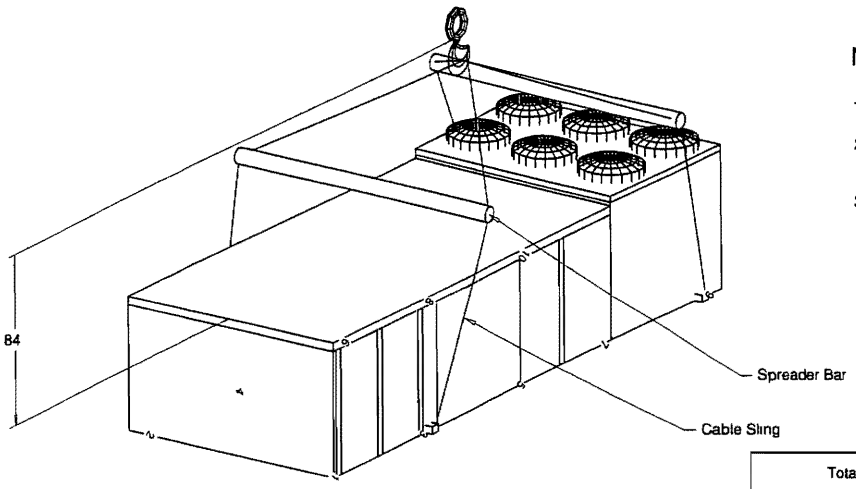

NOTES

1. The actual weight is stamped on the unit nameplate
2. The weight shown represent the typical unit operating weights for the unit selected
3. Design special weights are not included in the submittal

Total Weight
8280 0 lb
Weight Add for Double Wall

RIGGING

	POINT WEIGHTS lb									
	1	2	3	4	5	6	7	8	9	10
	560 0 lb		800 0 lb	820 0 lb	800 0 lb	1050 0 lb	980 0 lb	1000 0 lb	950 0 lb	780 0 lb
X / Y	4 / 4	4 / 87"	101 / 4	101 / 87"	187 / 4	187" / 87	274 / 4	274 / 87	338 / 4	338 / 87

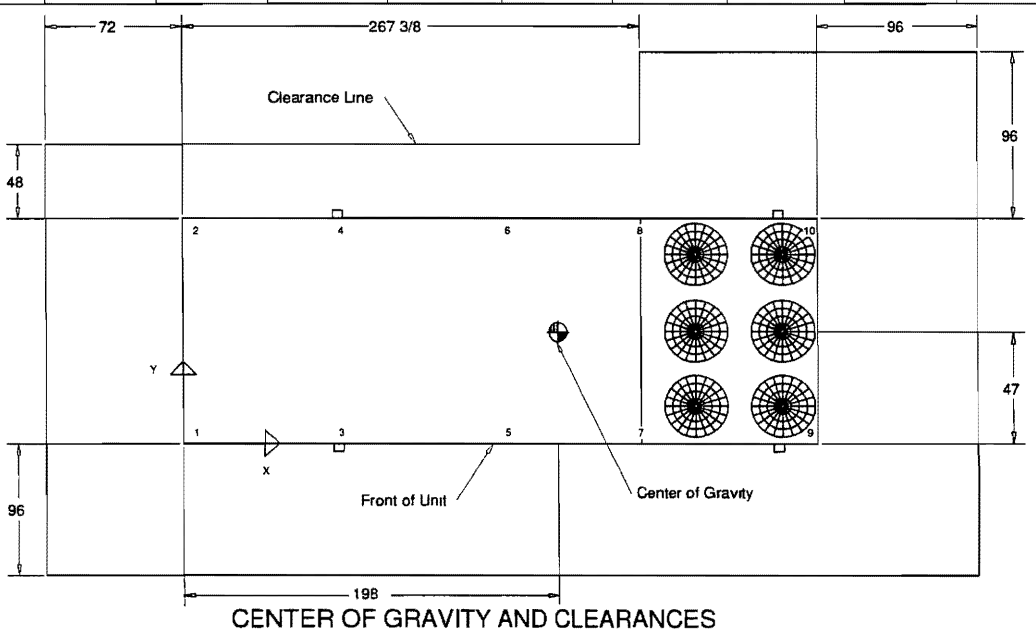

CENTER OF GRAVITY AND CLEARANCES

indoor AHU-1.pdf 0234

Voltage 460/3
1800 RPM
60 cycle/sec
RH drive
Inverter balance
TR1 Variable frequency drive w/ byp
Trane supplied VFD or starter

Performance Data - Indoor Central Station Air Handler Units

Tags	**AHU-2**	
Unit level selections		
Position		
Actual airflow (cfm)	4200	
Unit elevation (ft)	0 00	
Length (in)	188 000	
Rigging unit weight (lb)	3005 6	
Installed unit weight (lb)	3020 7	
Fan module		
Position	**#1**	**#7**
Fan airflow (cfm)	4200	4200
External static pressure (in H2O)	0 50	1 50
Total static pressure (in H2O)	0 71	2 90
Fan module pressure drop (in H2O)	0 50	1 50
Design temperature (F)	70 00	70 00
Minimum temperature (F)	10 00	10 00
Speed (rpm)	738	1961
Brake horsepower (hp)	1 353	3 519
Elevation (ft)	0 00	0 00
Width (in)	60 000	60 000
Height (in)	34 000	34 000
Weight (lb)	708 2	769 3
Fan discharge loss pressure drop (in H2O)	0 00	0 00
Access/turning module		
Position	**#5**	
Additional static pressure drop (in H2O)	0 00	
Module length (in)	15 500	
Module weight (lb)	176 3	
Module width (in)	60 000	
Module height (in)	34 000	
Coil module		
Position	**#4**	**#6**
Coil design airflow (cfm)	4200	4200
Total capacity (MBh)	151 00	129 00
Dry coil weight (lb)	59 9	137 7
Entering dry bulb (F)	55 00	80 00
Entering wet bulb (F)	-	64 00
Fluid temperature drop (F)	40 00	-
Sensible capacity (MBh)	-	117 74
Liquid temperature (F)	-	115 00
Fluid volume (gal)	1 82	6 21
Suction temperature (F)	-	44 00
Leaving dry bulb (F)	88 15	54 45
Leaving wet bulb (F)	-	53 58
Entering fluid temperature (F)	160 00	-
Leaving fluid temperature (F)	120 00	-
Standard fluid flow rate (gpm)	7 56	-
Fluid pressure drop (ft H2O)	0 70	-
Air pressure drop (in H2O)	0 12	0 50
Elevation (ft)	0 00	0 00

Tags	AHU-2	
Face velocity (ft/min)	448	435
Face area (sq ft)	9 38	9 64
Wet coil weight (lb)	75 0	-
Coil fouling factor (hr-sq ft-deg F/Btu)	0 00050	-
Fluid velocity (ft/sec)	0 93	-
Coil module pressure drop (in H2O)	0 12	0 50
Fluid type	Water	-
Module length (in)	11 000	15 500
Module weight (lb)	221 3	322 2
Module width (in)	60 000	60 000
Module height (in)	34 000	34 000
Low limit interlock wiring	No LLT wired to starter,vfd	No LLT wired to starter,vfd
Air mixing module		
Position	**#2**	**#3**
Filter condition	-	Mid-life
Bottom entry pressure drop (in H2O)	0 00	0 00
Back opening airflow (cfm)	4200	4200
Back entry pressure drop (in H2O)	0 00	0 21
Top opening airflow (cfm)	4200	4200
Top entry pressure drop (in H2O)	0 21	0 21
Front opening airflow (cfm)	4200	4200
Front entry pressure drop (in H2O)	0 00	0 00
Left side entry pressure drop (in H2O)	0 00	0 00
Right side entry pressure drop (in H2O)	0 00	0 00
Filter airflow (cfm)	4200	4200
Filter pressure drop (in H2O)	0 00	0 57
Total filter pressure drop (in H2O)	0 00	0 57
Module total pressure drop (in H2O)	0 21	0 78
Module length (in)	34 000	34 000
Module weight (lb)	400 8	422 5
Module width (in)	60 000	60 000
Module height (in)	34 000	34 000

As-Built - Indoor Central Station Air Handler Units
Item: A1 Qty 1 Tag(s) AHU-2

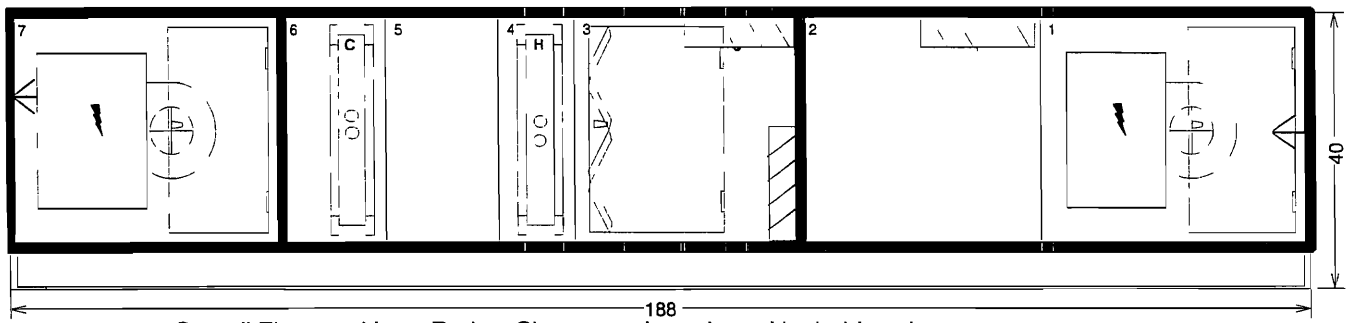

Overall Elevation View Right - Shipping splits indicated by bold outline - Measurements in inches

Pos #	Module	Length	Weight
1	Fan module	39	708 20
2	Air mixing module	34	400 80
3	Air mixing module	34	422 47
4	Coil module	11	221 30
5	Access/turning module	15 1/2	176 35
6	Coil module	15 1/2	322 25
7	Fan module	39	769 30
		Installed Unit Weight	3020 67 lbs

Overall unit height does include factory attached external support kit

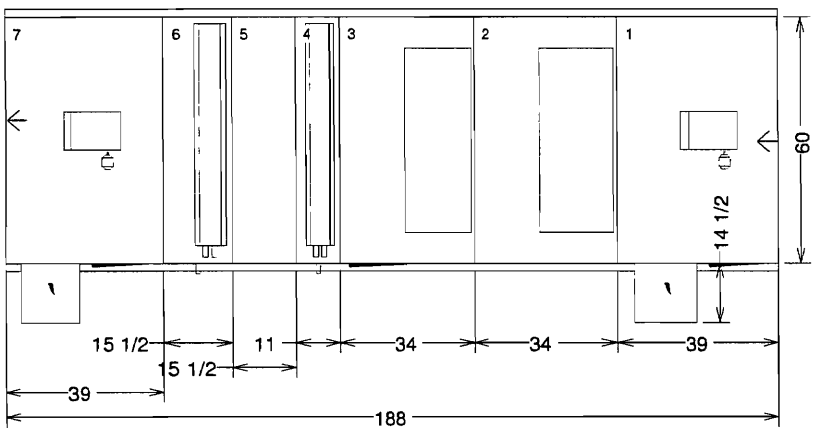

Overall Plan View Top Measurements in inches

As-Built - Indoor Central Station Air Handler Units
Item A1 Qty 1 Tag(s) AHU-2

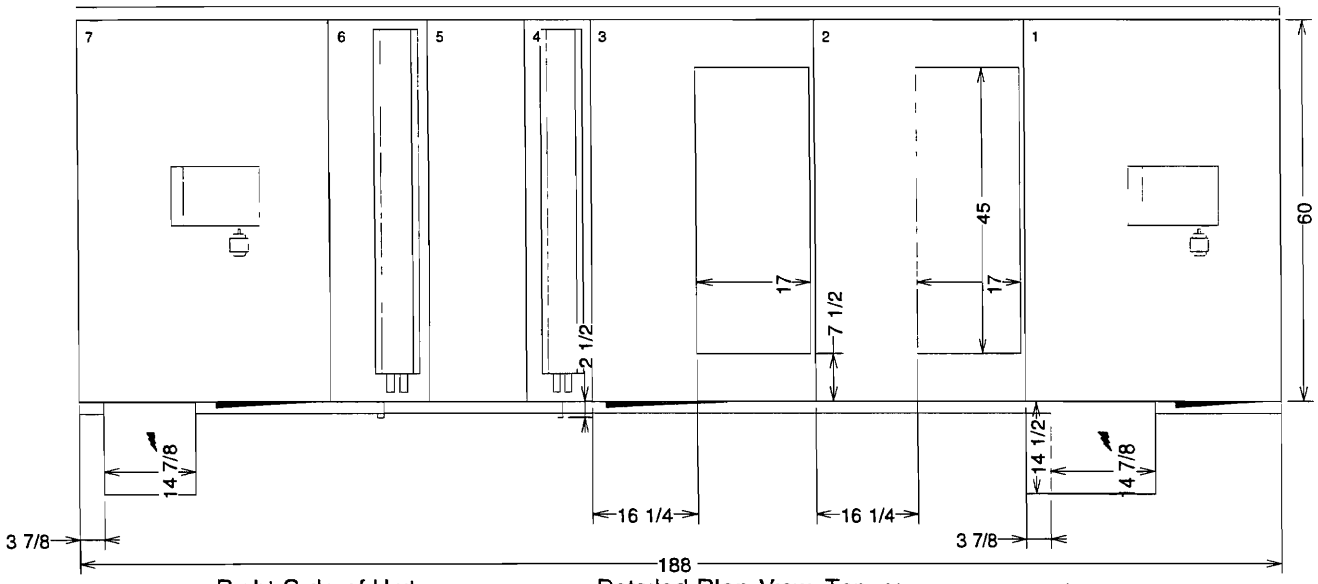

Right Side of Unit Detailed Plan View Top Measurements in inches

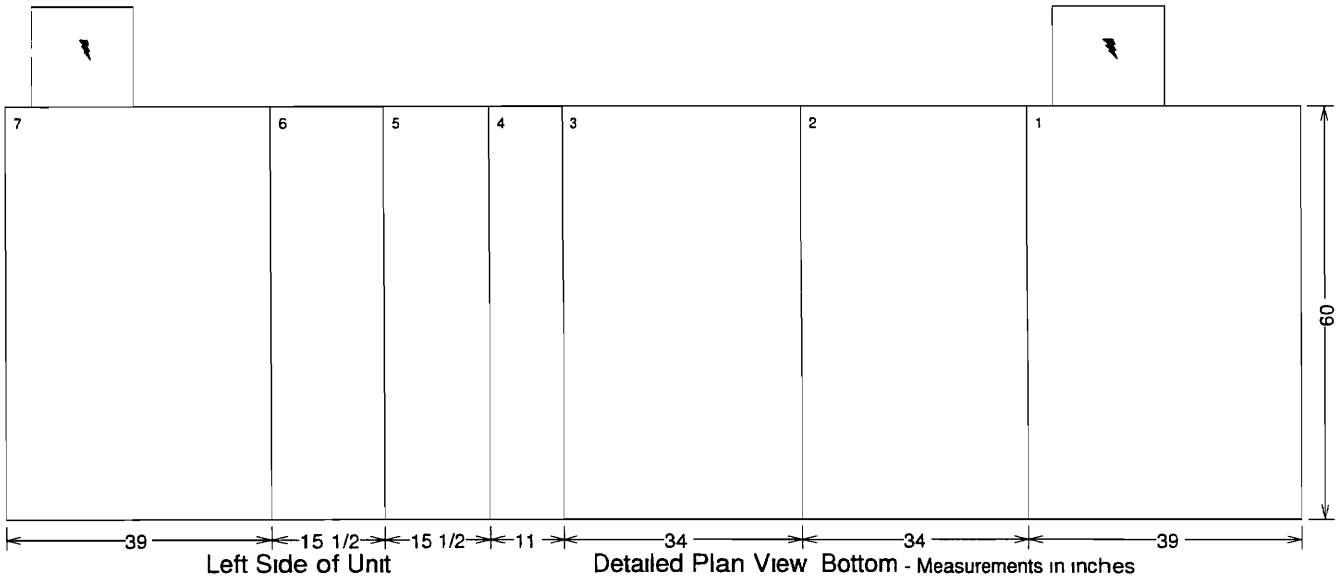

Left Side of Unit Detailed Plan View Bottom - Measurements in inches

As-Built - Indoor Central Station Air Handler Units
Item A1 Qty 1 Tag(s) AHU-2

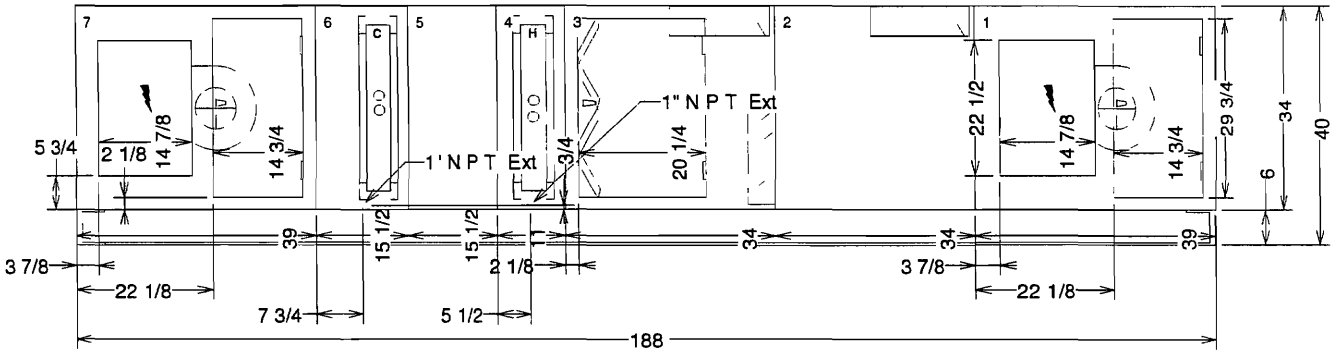

Detailed Elevation View Right - Measurements in inches

Overall unit height does include factory attached external support kit

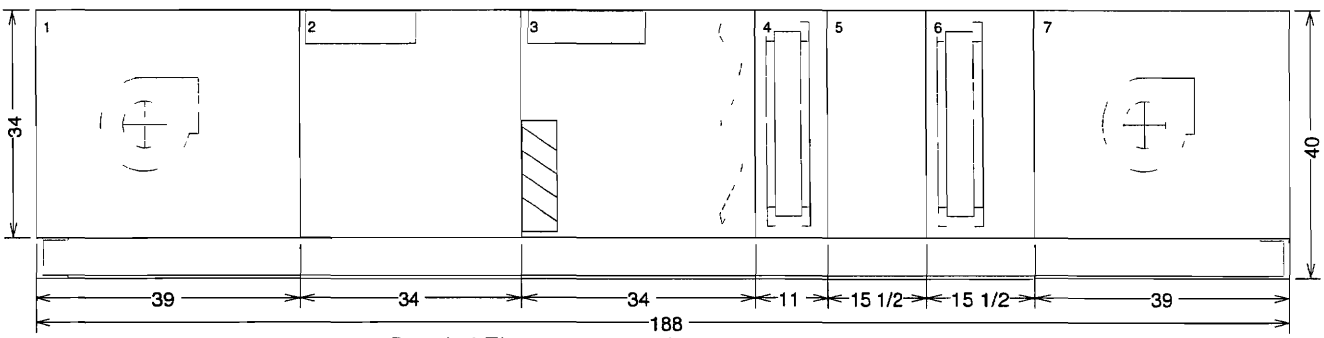

Detailed Elevation View Left - Measurements in inches

Gravity Beam Design

1.2DL+1.6LL

0239 NO MECH

RAM Steel v11 0
DataBase roof framing under units before units
Building Code IBC

02/07/08 15 19 54
Steel Code AISC LRFD

Floor Type: Roof **Beam Number = 3**

SPAN INFORMATION (ft): I-End (0.00,17.17) J-End (25.46,17.17)

Beam Size (User Selected) = W16X31 Fy = 50 0 ksi
Total Beam Length (ft) = 25 46
Cantilever on right (ft) = 8 42
Mp (kip-ft) = 225 00

POINT LOADS (kips):

Dist	DL	RedLL	Red%	NonRLL	StorLL	Red%	RoofLL	Red%
3 750	6 42	0 00	0 0	0 00	0 00	0 0	1 93	1 1
11 250	7 59	0 00	0 0	0 00	0 00	0 0	2 28	1 1
21 228	2 40	0 00	0 0	0 00	0 00	0 0	0 72	0 0
25 458	4 18	0 00	0 0	0 00	0 00	0 0	1 26	0 0

SHEAR (Ultimate): Max Vu (1.2DL+1.6LL) = 15.23 kips 0.90Vn = 118.06 kips

MOMENTS (Ultimate):

Span	Cond	LoadCombo	Mu kip-ft	@ ft	Lb ft	Cb	Phi	Phi*Mn kip-ft
Center	Max +	1 2DL+1 6LL	35 7	3 8	7 5	1 12	0 90	192 30
	Max -	1 2DL+1 6LL	-76 1	17 0	5 8	1 59	0 90	202 50
Right	Max -	1 2DL+1 6LL	-76 1	17 0	4 2	1 00	0 90	201 88
Controlling		1 2DL+1 6LL	-76 1	17 0	4 2	1 00	0 90	201 88

REACTIONS (kips):

	Left	Right
DL reaction	4 93	15 66
Max +LL reaction	2 26	4 69
Max -LL reaction	-0 80	0 00
Max +total reaction (factored)	9 53	26 29

DEFLECTIONS:

Center span:

Dead load (in)	at	7 24 ft	=	-0 046	L/D	=	4440
Live load (in)	at	7 24 ft	=	-0 050	L/D	=	4110
Net Total load (in)	at	7 24 ft	=	-0 096	L/D	=	2134

Right cantilever:

Dead load (in)	=	-0 229	L/D	=	881
Pos Live load (in)	=	-0 150	L/D	=	1346
Neg Live load (in)	=	0 080	L/D	=	2515
Pos Total load (in)	=	-0 379	L/D	=	533

Gravity Beam Design

0240

RAM Steel v11 0
DataBase roof framing under units before units
Building Code IBC

02/07/08 15 19 54
Steel Code AISC LRFD

Floor Type: Roof **Beam Number = 5**

SPAN INFORMATION (ft): I-End (0.00,34.33) J-End (25.46,34.33)

Beam Size (User Selected) = W16X31 Fy = 50 0 ksi
Total Beam Length (ft) = 25 46
Cantilever on right (ft) = 8 42
Mp (kip-ft) = 225 00

POINT LOADS (kips):

Dist	DL	RedLL	Red%	NonRLL	StorLL	Red%	RoofLL	Red%
3 750	6 62	0 00	0 0	0 00	0 00	0 0	1 99	1 7
11 250	7 83	0 00	0 0	0 00	0 00	0 0	2 35	1 7
21 228	2 40	0 00	0 0	0 00	0 00	0 0	0 72	0 0
25 458	4 35	0 00	0 0	0 00	0 00	0 0	1 31	0 0

SHEAR (Ultimate): Max Vu (1.2DL+1.6LL) = 15.68 kips 0.90Vn = 118.06 kips

MOMENTS (Ultimate):

Span	Cond	LoadCombo	Mu kip-ft	@ ft	Lb ft	Cb	Phi	Phi*Mn kip-ft
Center	Max +	1 2DL+1 6LL	36 8	3 8	7 5	1 12	0 90	192 42
	Max -	1 2DL+1 6LL	-78 5	17 0	5 8	1 59	0 90	202 50
Right	Max -	1 2DL+1 6LL	-78 5	17 0	4 2	1 00	0 90	201 88
Controlling		1 2DL+1 6LL	-78 5	17 0	4 2	1 00	0 90	201 88

REACTIONS (kips):

	Left	Right
DL reaction	5 09	16 11
Max +LL reaction	2 31	4 81
Max -LL reaction	-0 82	0 00
Max +total reaction (factored)	9 81	27 03

DEFLECTIONS:

Center span:

Dead load (in)	at	7 24 ft	=	-0 048	L/D	=	4304
Live load (in)	at	7 24 ft	=	-0 051	L/D	=	4011
Net Total load (in)	at	7 24 ft	=	-0 098	L/D	=	2076

Right cantilever:

Dead load (in)	=	-0 237	L/D	=	853
Pos Live load (in)	=	-0 155	L/D	=	1303
Neg Live load (in)	=	0 082	L/D	=	2454
Pos Total load (in)	=	-0 392	L/D	=	515

Gravity Beam Design

RAM Steel v11 0
DataBase roof framing under units before units
Building Code IBC

02/07/08 15 19 54
Steel Code AISC LRFD

Floor Type: Roof **Beam Number = 16**

SPAN INFORMATION (ft): I-End (25.46,0.00) J-End (25.46,17.17)

Beam Size (User Selected) = W14X22 Fy = 50 0 ksi
Total Beam Length (ft) = 17 17

COMPOSITE PROPERTIES (Not Shored):

		Left			Right
Concrete thickness (in)		3 25			3 25
Unit weight concrete (pcf)		115 00			115 00
f'c (ksi)		3 00			3 00
Decking Orientation		perpendicular			perpendicular
Decking type		VERCO W3 Formlok			VERCO W3 Formlok
beff (in)	=	31 75	Y bar(in)	=	13 16
Mnf (kip-ft)	=	286 35	Mn (kip-ft)	=	227 57
C (kips)	=	106 10	PNA (in)	=	11 46
Ieff (in4)	=	501 87	Itr (in4)	=	675 98
Stud length (in)	=	5 00	Stud diam (in)	=	0 75

Stud Capacity (kips) Qn = 13 3
# of studs Max = 17 Partial = 17 Actual = 17
Number of Stud Rows = 1 Percent of Full Composite Action = 40 32

LINE LOADS (k/ft):

Load	Dist	DL	CDL	LL	Red%	Type	CLL
1	0 000	0 280	0 225	0 084	0 0%	Roof	0 000
	17 166	0 280	0 225	0 084			0 000
2	0 000	0 033	0 027	0 010	0 0%	Roof	0 000
	17 166	0 033	0 027	0 010			0 000

SHEAR (Ultimate): Max Vu (1.2DL+1.6LL) = 4.52 kips 0.90Vn = 85.08 kips

MOMENTS (Ultimate):

Span	Cond	LoadCombo	Mu kip-ft	@ ft	Lb ft	Cb	Phi	Phi*Mn kip-ft
Center	PreCmp+	1 4DL	13 0	8 6	0 0	1 00	0 90	124 50
	Init DL	1 4DL	13 0	8 6	---	---		
	Max +	1 2DL+1 6LL	19 4	8 6	---	---	0 85	193 44
Controlling		1 4DL	13 0	8 6	0 0	1 00	0 90	124 50

REACTIONS (kips):

	Left	Right
Initial reaction	2 16	2 16
DL reaction	2 69	2 69
Max +LL reaction	0 81	0 81
Max +total reaction (factored)	4 52	4 52

DEFLECTIONS:

Initial load (in)	at	8 58 ft	=	-0 085	L/D	=	2415
Live load (in)	at	8 58 ft	=	-0 013	L/D	=	16294
Post Comp load (in)	at	8 58 ft	=	-0 021	L/D	=	9875

Net Total load (in)	at	8 58 ft	=	-0 106	L/D	=	1941

Gravity Beam Design

RAM Steel v11 0
DataBase roof framing under units before units
Building Code IBC

02/07/08 15 19 54
Steel Code AISC LRFD

Floor Type: Roof **Beam Number = 17**

SPAN INFORMATION (ft): I-End (25.46,17.17) J-End (25.46,34.33)

Beam Size (User Selected) = W14X22 Fy = 50 0 ksi
Total Beam Length (ft) = 17 17

COMPOSITE PROPERTIES (Not Shored):

		Left			Right
Concrete thickness (in)		3 25			3 25
Unit weight concrete (pcf)		115 00			115 00
f'c (ksi)		3 00			3 00
Decking Orientation		perpendicular			perpendicular
Decking type		VERCO W3 Formlok			VERCO W3 Formlok
beff (in)	=	31 38	Y bar(in)	=	13 13
Mnf (kip-ft)	=	285 14	Mn (kip-ft)	=	227 51
C (kips)	=	106 10	PNA (in)	=	11 46
Ieff (in4)	=	502 02	Itr (in4)	=	673 41
Stud length (in)	=	5 00	Stud diam (in)	=	0 75

Stud Capacity (kips) Qn = 13 3
# of studs Max = 17 Partial = 17 Actual = 17
Number of Stud Rows = 1 Percent of Full Composite Action = 40 79

LINE LOADS (k/ft):

Load	Dist	DL	CDL	LL	Red%	Type	CLL
1	0 000	0 141	0 113	0 042	0 0%	Roof	0 000
	17 166	0 141	0 113	0 042			0 000
2	0 000	0 033	0 027	0 010	0 0%	Roof	0 000
	17 166	0 033	0 027	0 010			0 000

SHEAR (Ultimate): Max Vu (1.2DL+1.6LL) = 2.51 kips 0.90Vn = 85.08 kips

MOMENTS (Ultimate):

Span	Cond	LoadCombo	Mu kip-ft	@ ft	Lb ft	Cb	Phi	Phi*Mn kip-ft
Center	PreCmp+	1 4DL	7 2	8 6	0 0	1 00	0 90	124 50
	Init DL	1 4DL	7 2	8 6	---	---		
	Max +	1 2DL+1 6LL	10 8	8 6	---	---	0 85	193 38
Controlling		1 4DL	7 2	8 6	0 0	1 00	0 90	124 50

REACTIONS (kips):

	Left	Right
Initial reaction	1 20	1 20
DL reaction	1 49	1 49
Max +LL reaction	0 45	0 45
Max +total reaction (factored)	2 51	2 51

DEFLECTIONS:

Initial load (in)	at	8 58 ft	=	-0 047	L/D =	4349
Live load (in)	at	8 58 ft	=	-0 007	L/D =	29346
Post Comp load (in)	at	8 58 ft	=	-0 012	L/D =	17786

Net Total load (in)	at	8 58 ft	=	-0 059	L/D	=	3494

Gravity Beam Design

RAM Steel v11 0
DataBase roof framing under units before units
Building Code IBC

02/07/08 15 19 54
Steel Code AISC LRFD

Floor Type: Roof **Beam Number = 18**

SPAN INFORMATION (ft): I-End (25.46,34.33) J-End (25.46,52.58)

Beam Size (User Selected) = W14X22 Fy = 50 0 ksi
Total Beam Length (ft) = 18 25

COMPOSITE PROPERTIES (Not Shored):

		Left			Right
Concrete thickness (in)		3 25			3 25
Unit weight concrete (pcf)		115 00			115 00
f'c (ksi)		3 00			3 00
Decking Orientation		perpendicular			perpendicular
Decking type		VERCO W3 Formlok			VERCO W3 Formlok
beff (in)	=	33 38	Y bar(in)	=	13 30
Mnf (kip-ft)	=	291 66	Mn (kip-ft)	=	235 45
C (kips)	=	119 36	PNA (in)	=	12 04
Ieff (in4)	=	519 48	Itr (in4)	=	686 86
Stud length (in)	=	5 00	Stud diam (in)	=	0 75

Stud Capacity (kips) Qn = 13 3
# of studs Max = 18 Partial = 18 Actual = 18
Number of Stud Rows = 1 Percent of Full Composite Action = 43 15

LINE LOADS (k/ft):

Load	Dist	DL	CDL	LL	Red%	Type	CLL
1	0 000	0 280	0 225	0 084	0 0%	Roof	0 000
	18 250	0 280	0 225	0 084			0 000
2	0 000	0 033	0 027	0 010	0 0%	Roof	0 000
	18 250	0 033	0 027	0 010			0 000

SHEAR (Ultimate): Max Vu (1.2DL+1.6LL) = 4.80 kips 0.90Vn = 85.08 kips

MOMENTS (Ultimate):

Span	Cond	LoadCombo	Mu kip-ft	@ ft	Lb ft	Cb	Phi	Phi*Mn kip-ft
Center	PreCmp+	1 4DL	14 7	9 1	0 0	1 00	0 90	124 50
	Init DL	1 4DL	14 7	9 1	---	---		
	Max +	1 2DL+1 6LL	21 9	9 1	---	---	0 85	200 14
Controlling		1 4DL	14 7	9 1	0 0	1 00	0 90	124 50

REACTIONS (kips):

	Left	Right
Initial reaction	2 30	2 30
DL reaction	2 86	2 86
Max +LL reaction	0 86	0 86
Max +total reaction (factored)	4 80	4 80

DEFLECTIONS:

Initial load (in)	at	9 13 ft	=	-0 109	L/D =	2010
Live load (in)	at	9 13 ft	=	-0 016	L/D =	14037
Post Comp load (in)	at	9 13 ft	=	-0 026	L/D =	8507

Net Total load (in)	at	9 13 ft	=	-0 135	L/D =	1626

Gravity Beam Design

w/ Mech

RAM Steel v11 0
DataBase roof framing under units
Building Code IBC

0247

02/07/08 15 01 21
Steel Code AISC LRFD

Floor Type: Roof **Beam Number = 3**

SPAN INFORMATION (ft): I-End (0.00,17.17) J-End (25.46,17.17)

Beam Size (User Selected) = W16X31 Fy = 50 0 ksi
Total Beam Length (ft) = 25 46
Cantilever on right (ft) = 8 42

COMPOSITE PROPERTIES (Not Shored):

		Left			**Right**
Concrete thickness (in)		3 25			3 25
Unit weight concrete (pcf)		115 00			115 00
f'c (ksi)		3 00			3 00
Decking Orientation		parallel			parallel
Decking type		VERCO W3 Formlok			VERCO W3 Formlok
beff (in)	=	51 13	Y bar(in)	=	15 28
Mnf (kip-ft)	=	465 65	Mn (kip-ft)	=	330 54
C (kips)	=	106 10	PNA (in)	=	11 81
Ieff (in4)	=	801 91	Itr (in4)	=	1228 13
Stud length (in)	=	5 00	Stud diam (in)	=	0 75

Stud Capacity (kips) Qn = 17 7
# of studs Max = 45 Partial = 29 Actual = 29
Number of Stud Rows = 1 Percent of Full Composite Action = 25 04

POINT LOADS (kips):

Dist	DL	CDL	RedLL	Red%	NonRLL	StorLL	Red%	RoofLL	Red%	CLL
3 750	10 71	5 17	0 00	0 0	0 00	0 00	0 0	1 93	1 1	0 00
11 250	11 88	6 10	0 00	0 0	0 00	0 00	0 0	2 28	1 1	0 00
21 228	3 69	1 93	0 00	0 0	0 00	0 00	0 0	0 72	0 0	0 00
25 458	2 78	1 20	0 00	0 0	0 00	0 00	0 0	0 45	0 0	0 00
25 458	2 69	2 16	0 00	0 0	0 00	0 00	0 0	0 81	0 0	0 00

SHEAR (Ultimate): Max Vu (1.2DL+1.6LL) = 20.90 kips 0.90Vn = 118.06 kips

MOMENTS (Ultimate):

Span	Cond	LoadCombo	Mu kip-ft	@ ft	Lb ft	Cb	Phi	Phi*Mn kip-ft
Center	PreCmp+	1 4DL	20 8	3 8	7 5	1 32	0 90	202 50
	PreCmp-	1 4DL	-51 0	17 0	5 8	1 87	0 90	202 50
	Init DL	1 4DL	-51 0	17 0	---	---		
	Max +	1 2DL+1 6LL	53 1	3 8	---	---	0 85	280 96
	Max -	1 2DL+1 6LL	-95 5	17 0	5 8	1 76	0 90	202 50
Right	PreCmp-	1 4DL	-51 0	17 0	4 2	1 00	0 90	201 88
	Max -	1 2DL+1 6LL	-95 5	17 0	4 2	1 00	0 90	201 88
Controlling		1 2DL+1 6LL	-95 5	17 0	4 2	1 00	0 90	201 88

REACTIONS (kips):

	Left	**Right**
Initial reaction	3 97	12 60
DL reaction	8 79	22 96
Max +LL reaction	2 26	4 69

	Left	Right
Max -LL reaction	-0 80	0 00
Max +total reaction (factored)	14 15	35 06

DEFLECTIONS:

Center span:

Initial load (in)	at	6 13 ft	=	-0 038	L/D	=	5402
Live load (in)	at	7 07 ft	=	-0 023	L/D	=	8859
Post Comp load (in)	at	7 07 ft	=	-0 054	L/D	=	3764
Net Total load (in)	at	7 07 ft	=	-0 092	L/D	=	2231

Right cantilever:

Init load (in)	=	-0 184	L/D	=	1095
Pos Live load (in)	=	-0 095	L/D	=	2124
Neg Live load (in)	=	0 038	L/D	=	5378
Pos Post Comp load (in)	=	-0 168	L/D	=	1206
Pos Total load (in)	=	-0 352	L/D	=	574

Gravity Beam Design

RAM Steel v11 0
DataBase roof framing under units
Building Code IBC

0249 02/07/08 15 01 21
Steel Code AISC LRFD

Floor Type: Roof **Beam Number = 5**

SPAN INFORMATION (ft): I-End (0.00,34.33) J-End (25.46,34.33)

Beam Size (User Selected) = W16X31 Fy = 50 0 ksi
Total Beam Length (ft) = 25 46
Cantilever on right (ft) = 8 42
Mp (kip-ft) = 225 00

POINT LOADS (kips):

Dist	DL	RedLL	Red%	NonRLL	StorLL	Red%	RoofLL	Red%
3 750	3 41	0 00	0 0	0 00	0 00	0 0	1 03	1 7
3 750	5 36	0 00	0 0	0 00	0 00	0 0	0 97	1 7
11 250	4 03	0 00	0 0	0 00	0 00	0 0	1 21	1 7
11 250	5 94	0 00	0 0	0 00	0 00	0 0	1 14	1 7
21 228	3 69	0 00	0 0	0 00	0 00	0 0	0 72	0 0
25 458	2 86	0 00	0 0	0 00	0 00	0 0	0 86	0 0
25 458	2 78	0 00	0 0	0 00	0 00	0 0	0 45	0 0

SHEAR (Ultimate): Max Vu (1.2DL+1.6LL) = 19.09 kips 0.90Vn = 118.06 kips

MOMENTS (Ultimate):

Span	Cond	LoadCombo	Mu kip-ft	@ ft	Lb ft	Cb	Phi	Phi*Mn kip-ft
Center	Max +	1 2DL+1 6LL	43 3	3 8	7 5	1 17	0 90	201 91
	Max -	1 2DL+1 6LL	-97 9	17 0	5 8	1 61	0 90	202 50
Right	Max -	1 2DL+1 6LL	-97 9	17 0	4 2	1 00	0 90	201 88
Controlling		1 2DL+1 6LL	-97 9	17 0	4 2	1 00	0 90	201 88

REACTIONS (kips):

	Left	**Right**
DL reaction	6 54	21 53
Max +LL reaction	2 31	4 81
Max -LL reaction	-0 82	0 00
Max +total reaction (factored)	11 55	33 53

DEFLECTIONS:

Center span:

Dead load (in)	at	6 99 ft	=	-0 056	L/D	=	3682
Live load (in)	at	6 99 ft	=	-0 050	L/D	=	4060
Net Total load (in)	at	6 99 ft	=	-0 106	L/D	=	1931

Right cantilever:

Dead load (in)	=	-0 333	L/D	=	607
Pos Live load (in)	=	-0 155	L/D	=	1303
Neg Live load (in)	=	0 082	L/D	=	2454
Pos Total load (in)	=	-0 488	L/D	=	414

Gravity Beam Design

RAM Steel v11 0
DataBase roof framing under units
Building Code IBC

6250 02/07/08 15 01 21
Steel Code AISC LRFD

Floor Type: Roof **Beam Number = 6**

SPAN INFORMATION (ft): I-End (3.75,0.00) J-End (3.75,17.17)

Beam Size (User Selected) = W14X22 Fy = 50 0 ksi
Total Beam Length (ft) = 17 17

COMPOSITE PROPERTIES (Not Shored):

					Left		**Right**
Concrete thickness (in)					3 25		3 25
Unit weight concrete (pcf)					115 00		115 00
f'c (ksi)					3 00		3 00
Decking Orientation					perpendicular		perpendicular
Decking type					VERCO W3 Formlok		VERCO W3 Formlok
beff (in)	=	48 25	Y bar(in)			=	14 31
Mnf (kip-ft)	=	318 59	Mn (kip-ft)			=	229 56
C (kips)	=	106 10	PNA (in)			=	11 46
Ieff (in4)	=	522 69	Itr (in4)			=	765 09
Stud length (in)	=	5 00	Stud diam (in)			=	0 75

Stud Capacity (kips) Qn = 13 3
# of studs Max = 17 Partial = 17 Actual = 17
Number of Stud Rows = 1 Percent of Full Composite Action = 32 69

LINE LOADS (k/ft):

Load	Dist	DL	CDL	LL	Red%	Type	CLL
1	0 000	0 250	0 000	0 000	0 0%	Red	0 000
	17 166	0 250	0 000	0 000			0 000
2	0 000	0 374	0 301	0 113	0 0%	Roof	0 000
	17 166	0 374	0 301	0 113			0 000

SHEAR (Ultimate): Max Vu (1.2DL+1.6LL) = 7.97 kips 0.90Vn = 85.08 kips

MOMENTS (Ultimate):

Span	Cond	LoadCombo	Mu kip-ft	@ ft	Lb ft	Cb	Phi	Phi*Mn kip-ft
Center	PreCmp+	1 4DL	15 5	8 6	0 0	1 00	0 90	124 50
	Init DL	1 4DL	15 5	8 6	---	---		
	Max +	1 2DL+1 6LL	34 2	8 6	---	---	0 85	195 12
Controlling		1 2DL+1 6LL	34 2	8 6	---	---	0 85	195 12

REACTIONS (kips):

	Left	**Right**
Initial reaction	2 58	2 58
DL reaction	5 36	5 36
Max +LL reaction	0 97	0 97
Max +total reaction (factored)	7 97	7 97

DEFLECTIONS:

Initial load (in)	at	8 58 ft	=	-0 102	L/D	=	2022
Live load (in)	at	8 58 ft	=	-0 015	L/D	=	14205
Post Comp load (in)	at	8 58 ft	=	-0 056	L/D	=	3668

Net Total load (in)	at	8 58 ft	=	-0 158	L/D	=	1303

Gravity Beam Design

RAM Steel v11 0
DataBase roof framing under units
Building Code IBC

0252
02/07/08 15 01 21
Steel Code AISC LRFD

Floor Type: Roof **Beam Number = 7**

SPAN INFORMATION (ft): I-End (3.75,17.17) J-End (3.75,34.33)

Beam Size (User Selected) = W14X22 Fy = 50 0 ksi
Total Beam Length (ft) = 17 17

COMPOSITE PROPERTIES (Not Shored):

		Left			Right
Concrete thickness (in)		3 25			3 25
Unit weight concrete (pcf)		115 00			115 00
f'c (ksi)		3 00			3.00
Decking Orientation		perpendicular			perpendicular
Decking type		VERCO W3 Formlok			VERCO W3 Formlok
beff (in)	=	48 25	Y bar(in)	=	14 31
Mnf (kip-ft)	=	318 59	Mn (kip-ft)	=	229.56
C (kips)	=	106 10	PNA (in)	=	11 46
Ieff (in4)	=	522 69	Itr (in4)	=	765 09
Stud length (in)	=	5 00	Stud diam (in)	=	0 75

Stud Capacity (kips) Qn = 13 3
# of studs Max = 17 Partial = 17 Actual = 17
Number of Stud Rows = 1 Percent of Full Composite Action = 32 69

LINE LOADS (k/ft):

Load	Dist	DL	CDL	LL	Red%	Type	CLL
1	0 000	0 250	0 000	0 000	0 0%	Red	0 000
	17 166	0 250	0 000	0 000			0 000
2	0 000	0 374	0 301	0 113	0 0%	Roof	0 000
	17 166	0 374	0 301	0 113			0 000

SHEAR (Ultimate): Max Vu (1.2DL+1.6LL) = 7.97 kips 0.90Vn = 85.08 kips

MOMENTS (Ultimate):

Span	Cond	LoadCombo	Mu	@	Lb	Cb	Phi	Phi*Mn
			kip-ft	ft	ft			kip-ft
Center	PreCmp+	1 4DL	15 5	8 6	0 0	1 00	0 90	124 50
	Init DL	1 4DL	15 5	8 6	---	---		
	Max +	1 2DL+1 6LL	34 2	8 6	---	---	0 85	195 12
Controlling		1 2DL+1 6LL	34 2	8 6	---	---	0 85	195 12

REACTIONS (kips):

	Left	Right
Initial reaction	2 58	2 58
DL reaction	5 36	5 36
Max +LL reaction	0 97	0 97
Max +total reaction (factored)	7 97	7 97

DEFLECTIONS:

Initial load (in)	at	8 58 ft	=	-0 102	L/D =	2022
Live load (in)	at	8 58 ft	=	-0 015	L/D =	14205
Post Comp load (in)	at	8.58 ft	=	-0 056	L/D =	3668

Net Total load (in)	at	8 58 ft	=	-0 158	L/D	=	1303

Gravity Beam Design

RAM Steel v11 0
DataBase roof framing under units
Building Code IBC

0254

02/07/08 15 01 21
Steel Code AISC LRFD

Floor Type: Roof **Beam Number = 8**

SPAN INFORMATION (ft): I-End (3.75,34.33) J-End (3.75,52.58)

Beam Size (User Selected) = W14X22 Fy = 50 0 ksi
Total Beam Length (ft) = 18 25

COMPOSITE PROPERTIES (Not Shored):

						Left	Right
Concrete thickness (in)						3 25	3 25
Unit weight concrete (pcf)						115 00	115 00
f'c (ksi)						3 00	3 00
Decking Orientation						perpendicular	perpendicular
Decking type						VERCO W3 Formlok	VERCO W3 Formlok
beff (in)	=	49 88	Y bar(in)	=	14 39		
Mnf (kip-ft)	=	319 75	Mn (kip-ft)	=	237 76		
C (kips)	=	119 36	PNA (in)	=	12 04		
Ieff (in4)	=	546 43	Itr (in4)	=	771 85		
Stud length (in)	=	5 00	Stud diam (in)	=	0 75		

Stud Capacity (kips) Qn = 13 3
# of studs Max = 18 Partial = 18 Actual = 18
Number of Stud Rows = 1 Percent of Full Composite Action = 36 78

LINE LOADS (k/ft):

Load	Dist	DL	CDL	LL	Red%	Type	CLL
1	0 000	0 374	0 301	0 113	0 0%	Roof	0 000
	18 250	0 374	0 301	0 113			0 000

SHEAR (Ultimate): Max Vu (1.2DL+1.6LL) = 5.74 kips 0.90Vn = 85.08 kips

MOMENTS (Ultimate):

Span	Cond	LoadCombo	Mu kip-ft	@ ft	Lb ft	Cb	Phi	Phi*Mn kip-ft
Center	PreCmp+	1 4DL	17 5	9 1	0 0	1 00	0 90	124 50
	Init DL	1 4DL	17 5	9 1	---	---		
	Max +	1 2DL+1 6LL	26 2	9 1	---	---	0 85	202 10
Controlling		1 4DL	17 5	9 1	0 0	1 00	0 90	124 50

REACTIONS (kips):

	Left	Right
Initial reaction	2 75	2 75
DL reaction	3 41	3 41
Max +LL reaction	1 03	1 03
Max +total reaction (factored)	5 74	5 74

DEFLECTIONS:

Initial load (in)	at	9 13 ft	=	-0 130	L/D =	1683
Live load (in)	at	9 13 ft	=	-0 018	L/D =	12359
Post Comp load (in)	at	9 13 ft	=	-0 029	L/D =	7490
Net Total load (in)	at	9 13 ft	=	-0 159	L/D =	1374

Gravity Beam Design

6255

RAM Steel v11 0
DataBase roof framing under units
Building Code IBC

02/07/08 15 01 21
Steel Code AISC LRFD

Floor Type: Roof **Beam Number = 11**

SPAN INFORMATION (ft): I-End (11.25,34.33) J-End (11.25,52.58)

Beam Size (User Selected) = W14X22 Fy = 50 0 ksi
Total Beam Length (ft) = 18 25

COMPOSITE PROPERTIES (Not Shored):

		Left			Right
Concrete thickness (in)		3 25			3 25
Unit weight concrete (pcf)		115 00			115 00
f'c (ksi)		3 00			3 00
Decking Orientation		perpendicular			perpendicular
Decking type		VERCO W3 Formlok			VERCO W3 Formlok
beff (in)	=	54 75	Y bar(in)	=	14 63
Mnf (kip-ft)	=	322 82	Mn (kip-ft)	=	238 18
C (kips)	=	119 36	PNA (in)	=	12 04
Ieff (in4)	=	557 79	Itr (in4)	=	790 60
Stud length (in)	=	5 00	Stud diam (in)	=	0 75

Stud Capacity (kips) Qn = 13 3
# of studs Max = 18 Partial = 18 Actual = 18
Number of Stud Rows = 1 Percent of Full Composite Action = 36 78

LINE LOADS (k/ft):

Load	Dist	DL	CDL	LL	Red%	Type	CLL
1	0 000	0 442	0 356	0 133	0 0%	Roof	0 000
	18 250	0 442	0 356	0 133			0 000

SHEAR (Ultimate): Max Vu (1.2DL+1.6LL) = 6.78 kips 0.90Vn = 85.08 kips

MOMENTS (Ultimate):

Span	Cond	LoadCombo	Mu kip-ft	@ ft	Lb ft	Cb	Phi	Phi*Mn kip-ft
Center	PreCmp+	1 4DL	20 7	9 1	0 0	1 00	0 90	124 50
	Init DL	1 4DL	20 7	9 1	---	---		
	Max +	1 2DL+1 6LL	30 9	9 1	---	---	0 85	202 45
Controlling		1 4DL	20 7	9 1	0 0	1 00	0 90	124 50

REACTIONS (kips):

	Left	Right
Initial reaction	3 24	3 24
DL reaction	4 03	4 03
Max +LL reaction	1 21	1 21
Max +total reaction (factored)	6 78	6 78

DEFLECTIONS:

Initial load (in)	at	9 13 ft	=	-0 154	L/D	=	1424
Live load (in)	at	9 13 ft	=	-0 021	L/D	=	10678
Post Comp load (in)	at	9 13 ft	=	-0 034	L/D	=	6472
Net Total load (in)	at	9 13 ft	=	-0 188	L/D	=	1167

Gravity Beam Design

RAM Steel v11 0
DataBase roof framing under units
Building Code IBC

0256
02/07/08 15 01 21
Steel Code AISC LRFD

Floor Type: Roof **Beam Number = 9**

SPAN INFORMATION (ft): I-End (11.25,0.00) J-End (11.25,17.17)

Beam Size (User Selected) = W14X22 Fy = 50 0 ksi
Total Beam Length (ft) = 17 17

COMPOSITE PROPERTIES (Not Shored):

		Left			Right
Concrete thickness (in)		3 25			3 25
Unit weight concrete (pcf)		115 00			115 00
f'c (ksi)		3 00			3 00
Decking Orientation		perpendicular			perpendicular
Decking type		VERCO W3 Formlok			VERCO W3 Formlok
beff (in)	=	51 50	Y bar(in)	=	14 48
Mnf (kip-ft)	=	320 84	Mn (kip-ft)	=	229 80
C (kips)	=	106 10	PNA (in)	=	11 46
Ieff (in4)	=	530 27	Itr (in4)	=	778 35
Stud length (in)	=	5 00	Stud diam (in)	=	0 75

Stud Capacity (kips) Qn = 13 3
# of studs Max = 17 Partial = 17 Actual = 17
Number of Stud Rows = 1 Percent of Full Composite Action = 32 69

LINE LOADS (k/ft):

Load	Dist	DL	CDL	LL	Red%	Type	CLL
1	0 000	0 250	0 000	0 000	0 0%	Red	0 000
	17 166	0 250	0 000	0 000			0 000
2	0 000	0 442	0 356	0 133	0 0%	Roof	0 000
	17 166	0 442	0 356	0 133			0 000

SHEAR (Ultimate): Max Vu (1.2DL+1.6LL) = 8.95 kips 0.90Vn = 85.08 kips

MOMENTS (Ultimate):

Span	Cond	LoadCombo	Mu kip-ft	@ ft	Lb ft	Cb	Phi	Phi*Mn kip-ft
Center	PreCmp+	1 4DL	18 3	8 6	0 0	1 00	0 90	124 50
	Init DL	1 4DL	18 3	8 6	---	---		
	Max +	1 2DL+1 6LL	38 4	8 6	---	---	0 85	195 33
Controlling		1 2DL+1 6LL	38 4	8 6	---	---	0 85	195 33

REACTIONS (kips):

	Left	Right
Initial reaction	3 05	3 05
DL reaction	5 94	5 94
Max +LL reaction	1 14	1 14
Max +total reaction (factored)	8 95	8 95

DEFLECTIONS:

Initial load (in)	at	8 58 ft	=	-0 120	L/D =	1711
Live load (in)	at	8 58 ft	=	-0 017	L/D =	12197
Post Comp load (in)	at	8 58 ft	=	-0 060	L/D =	3454

Net Total load (in)	at	8 58 ft	=	-0 180	L/D	=	1144

Gravity Beam Design

RAM Steel v11 0
DataBase roof framing under units
Building Code IBC

6258
02/07/08 15 01 21
Steel Code AISC LRFD

Floor Type: Roof **Beam Number = 10**

SPAN INFORMATION (ft): I-End (11.25,17.17) J-End (11.25,34.33)

Beam Size (User Selected) = W14X22 Fy = 50 0 ksi
Total Beam Length (ft) = 17 17

COMPOSITE PROPERTIES (Not Shored):

		Left			Right
Concrete thickness (in)		3 25			3 25
Unit weight concrete (pcf)		115 00			115 00
f'c (ksi)		3 00			3 00
Decking Orientation		perpendicular			perpendicular
Decking type		VERCO W3 Formlok			VERCO W3 Formlok
beff (in)	=	51 50	Y bar(in)	=	14 48
Mnf (kip-ft)	=	320 84	Mn (kip-ft)	=	229 80
C (kips)	=	106 10	PNA (in)	=	11 46
Ieff (in4)	=	530 27	Itr (in4)	=	778 35
Stud length (in)	=	5 00	Stud diam (in)	=	0 75

Stud Capacity (kips) Qn = 13 3
# of studs Max = 17 Partial = 17 Actual = 17
Number of Stud Rows = 1 Percent of Full Composite Action = 32 69

LINE LOADS (k/ft):

Load	Dist	DL	CDL	LL	Red%	Type	CLL
1	0 000	0 250	0 000	0 000	0 0%	Red	0 000
	17 166	0 250	0 000	0 000			0 000
2	0 000	0 442	0 356	0 133	0 0%	Roof	0 000
	17 166	0 442	0 356	0 133			0 000

SHEAR (Ultimate): Max Vu (1.2DL+1.6LL) = 8.95 kips 0.90Vn = 85.08 kips

MOMENTS (Ultimate):

Span	Cond	LoadCombo	Mu kip-ft	@ ft	Lb ft	Cb	Phi	Phi*Mn kip-ft
Center	PreCmp+	1 4DL	18 3	8 6	0 0	1 00	0 90	124 50
	Init DL	1 4DL	18 3	8 6	---	---		
	Max +	1 2DL+1 6LL	38 4	8 6	---	---	0 85	195 33
Controlling		1 2DL+1 6LL	38 4	8 6	---	---	0 85	195 33

REACTIONS (kips):

	Left	Right
Initial reaction	3 05	3 05
DL reaction	5 94	5 94
Max +LL reaction	1 14	1 14
Max +total reaction (factored)	8 95	8 95

DEFLECTIONS:

Initial load (in)	at	8 58 ft	=	-0 120	L/D	=	1711
Live load (in)	at	8 58 ft	=	-0 017	L/D	=	12197
Post Comp load (in)	at	8 58 ft	=	-0 060	L/D	=	3454

Net Total load (in)	at	8 58 ft	=	-0 180	L/D =	1144

Gravity Beam Design

0260

RAM Steel v11 0
DataBase roof framing under units
Building Code IBC

02/07/08 15 01 21
Steel Code AISC LRFD

Floor Type: Roof **Beam Number = 12**

SPAN INFORMATION (ft): I-End (17.04,0.00) J-End (17.04,17.17)

Beam Size (Optimum) = W10X12 Fy = 50 0 ksi
Total Beam Length (ft) = 17 17

COMPOSITE PROPERTIES (Not Shored):

						Left	**Right**
Concrete thickness (in)						3 25	3 25
Unit weight concrete (pcf)						115 00	115 00
f'c (ksi)						3 00	3 00
Decking Orientation						perpendicular	perpendicular
Decking type						VERCO W3 Formlok	VERCO W3 Formlok
beff (in)	=	51 50	Y bar(in)	=	12 43		
Mnf (kip-ft)	=	155 04	Mn (kip-ft)	=	123 97		
C (kips)	=	106 10	PNA (in)	=	9 69		
Ieff (in4)	=	259 00	Itr (in4)	=	318 84		
Stud length (in)	=	5 00	Stud diam (in)	=	0 75		

Stud Capacity (kips) Qn = 13 3
# of studs Max = 17 Partial = 17 Actual = 17
Number of Stud Rows = 1 Percent of Full Composite Action = 59 94

LINE LOADS (k/ft):

Load	Dist	DL	CDL	LL	Red%	Type	CLL
1	0 000	0 472	0 380	0 142	0 0%	Roof	0 000
	17 166	0 472	0 380	0 142			0 000

SHEAR (Ultimate): Max Vu (1.2DL+1.6LL) = 6.82 kips 0.90Vn = 50.63 kips

MOMENTS (Ultimate):

Span	Cond	LoadCombo	Mu kip-ft	@ ft	Lb ft	Cb	Phi	Phi*Mn kip-ft
Center	PreCmp+	1 4DL	19 6	8 6	0 0	1 00	0 90	46 94
	Init DL	1 4DL	19 6	8 6	---	---		
	Max +	1 2DL+1 6LL	29 3	8 6	---	---	0 85	105 38
Controlling		1 4DL	19 6	8 6	0 0	1 00	0 90	46 94

REACTIONS (kips):

	Left	**Right**
Initial reaction	3 26	3 26
DL reaction	4 05	4 05
Max +LL reaction	1 22	1 22
Max +total reaction (factored)	6 82	6 82

DEFLECTIONS:

Initial load (in)	at	8 58 ft	=	-0 476	L/D =	433
Live load (in)	at	8 58 ft	=	-0 037	L/D =	5573
Post Comp load (in)	at	8 58 ft	=	-0 061	L/D =	3378
Net Total load (in)	at	8 58 ft	=	-0 537	L/D =	384

Gravity Beam Design

RAM Steel v11 0
DataBase roof framing under units
Building Code IBC

0261

02/07/08 15 01 21
Steel Code AISC LRFD

Floor Type: Roof **Beam Number = 13**

SPAN INFORMATION (ft): I-End (17.04,17.17) J-End (17.04,34.33)

Beam Size (User Selected) = W14X22 Fy = 50 0 ksi
Total Beam Length (ft) = 17 17

COMPOSITE PROPERTIES (Not Shored):

	Left	Right
Concrete thickness (in)	3 25	3 25
Unit weight concrete (pcf)	115 00	115 00
f'c (ksi)	3 00	3 00
Decking Orientation	perpendicular	perpendicular
Decking type	VERCO W3 Formlok	VERCO W3 Formlok

beff (in)	=	50 87	Y bar(in)	=	14 45
Mnf (kip-ft)	=	320 42	Mn (kip-ft)	=	229 75
C (kips)	=	106 10	PNA (in)	=	11 46
Ieff (in4)	=	528 85	Itr (in4)	=	775 86
Stud length (in)	=	5 00	Stud diam (in)	=	0 75

Stud Capacity (kips) Qn = 13 3
# of studs Max = 17 Partial = 17 Actual = 17
Number of Stud Rows = 1 Percent of Full Composite Action = 32 69

LINE LOADS (k/ft):

Load	Dist	DL	CDL	LL	Red%	Type	CLL
1	0 000	0.332	0 267	0 100	0 0%	Roof	0 000
	17 166	0.332	0 267	0 100			0 000

SHEAR (Ultimate): Max Vu (1.2DL+1.6LL) = 4.79 kips 0.90Vn = 85.08 kips

MOMENTS (Ultimate):

Span	Cond	LoadCombo	Mu kip-ft	@ ft	Lb ft	Cb	Phi	Phi*Mn kip-ft
Center	PreCmp+	1 4DL	13 8	8 6	0 0	1 00	0 90	124 50
	Init DL	1 4DL	13 8	8 6	---	---		
	Max +	1 2DL+1 6LL	20 5	8 6	---	---	0 85	195 29
Controlling		1 4DL	13 8	8 6	0 0	1 00	0 90	124 50

REACTIONS (kips):

	Left	Right
Initial reaction	2 29	2 29
DL reaction	2 85	2 85
Max +LL reaction	0 86	0 86
Max +total reaction (factored)	4 79	4 79

DEFLECTIONS:

Initial load (in)	at	8 58 ft	=	-0 090	L/D	=	2279
Live load (in)	at	8 58 ft	=	-0 013	L/D	=	16204
Post Comp load (in)	at	8 58 ft	=	-0 021	L/D	=	9820
Net Total load (in)	at	8 58 ft	=	-0 111	L/D	=	1850

Gravity Beam Design

0262

RAM Steel v11 0
DataBase roof framing under units
Building Code IBC

02/07/08 15 01 21
Steel Code AISC LRFD

Floor Type: Roof **Beam Number = 14**

SPAN INFORMATION (ft): I-End (17.04,34.33) J-End (17.04,52.58)

Beam Size (User Selected) = W14X22 Fy = 50 0 ksi
Total Beam Length (ft) = 18 25

COMPOSITE PROPERTIES (Not Shored):

			Left		**Right**
Concrete thickness (in)			3 25		3 25
Unit weight concrete (pcf)			115 00		115 00
f'c (ksi)			3 00		3 00
Decking Orientation			perpendicular		perpendicular
Decking type			VERCO W3 Formlok		VERCO W3 Formlok
beff (in)	=	54 75	Y bar(in)	=	14 63
Mnf (kip-ft)	=	322 82	Mn (kip-ft)	=	238 18
C (kips)	=	119 36	PNA (in)	=	12 04
Ieff (in4)	=	557 79	Itr (in4)	=	790 60
Stud length (in)	=	5 00	Stud diam (in)	=	0 75

Stud Capacity (kips) Qn = 13 3
# of studs Max = 18 Partial = 18 Actual = 18
Number of Stud Rows = 1 Percent of Full Composite Action = 36 78

LINE LOADS (k/ft):

Load	Dist	DL	CDL	LL	Red%	Type	CLL
1	0 000	0 472	0 380	0 142	0 0%	Roof	0 000
	18 250	0 472	0 380	0 142			0 000

SHEAR (Ultimate): Max Vu (1.2DL+1.6LL) = 7.25 kips 0.90Vn = 85.08 kips

MOMENTS (Ultimate):

Span	Cond	LoadCombo	Mu	@	Lb	Cb	Phi	Phi*Mn
			kip-ft	ft	ft			kip-ft
Center	PreCmp+	1 4DL	22 2	9 1	0 0	1 00	0 90	124 50
	Init DL	1 4DL	22 2	9 1	---	---		
	Max +	1 2DL+1 6LL	33 1	9 1	---	---	0 85	202 45
Controlling		1 4DL	22 2	9 1	0 0	1 00	0 90	124 50

REACTIONS (kips):

	Left	**Right**
Initial reaction	3 47	3 47
DL reaction	4 31	4 31
Max +LL reaction	1 30	1 30
Max +total reaction (factored)	7 25	7 25

DEFLECTIONS:

Initial load (in)	at	9 13 ft	=	-0 164	L/D =	1332
Live load (in)	at	9 13 ft	=	-0 022	L/D =	9989
Post Comp load (in)	at	9 13 ft	=	-0 036	L/D =	6054
Net Total load (in)	at	9 13 ft	=	-0 201	L/D =	1092

Gravity Beam Design

RAM Steel v11 0
DataBase roof framing under units
Building Code IBC

02/07/08 15 01 21
Steel Code AISC LRFD

Floor Type: Roof **Beam Number = 15**

SPAN INFORMATION (ft): I-End (21.23,17.17) J-End (21.23,34.33)

Beam Size (User Selected) = W14X22 Fy = 50 0 ksi
Total Beam Length (ft) = 17 17

COMPOSITE PROPERTIES (Not Shored):

	Left	Right
Concrete thickness (in)	3 25	3 25
Unit weight concrete (pcf)	115 00	115 00
f'c (ksi)	3 00	3 00
Decking Orientation	perpendicular	perpendicular
Decking type	VERCO W3 Formlok	VERCO W3 Formlok

beff (in)	=	50 50	Y bar(in)	=	14 43
Mnf (kip-ft)	=	320 17	Mn (kip-ft)	=	229 72
C (kips)	=	106 10	PNA (in)	=	11 46
Ieff (in4)	=	528 00	Itr (in4)	=	774 38
Stud length (in)	=	5 00	Stud diam (in)	=	0 75

Stud Capacity (kips) Qn = 13 3
# of studs Max = 17 Partial = 17 Actual = 17
Number of Stud Rows = 1 Percent of Full Composite Action = 32 69

LINE LOADS (k/ft):

Load	Dist	DL	CDL	LL	Red%	Type	CLL
1	0 000	0 150	0 000	0 000	0 0%	Red	0 000
	17 166	0 150	0 000	0 000			0 000
2	0 000	0 280	0 225	0 084	0 0%	Roof	0 000
	17 166	0 280	0 225	0 084			0 000

SHEAR (Ultimate): Max Vu (1.2DL+1.6LL) = 5.58 kips 0.90Vn = 85.08 kips

MOMENTS (Ultimate):

Span	Cond	LoadCombo	Mu kip-ft	@ ft	Lb ft	Cb	Phi	Phi*Mn kip-ft
Center	PreCmp+	1 4DL	11 6	8 6	0 0	1 00	0 90	124 50
	Init DL	1 4DL	11 6	8 6	---	---		
	Max +	1 2DL+1 6LL	24 0	8 6	---	---	0 85	195 27
Controlling		1 2DL+1 6LL	24 0	8 6	---	---	0 85	195 27

REACTIONS (kips):

	Left	Right
Initial reaction	1 93	1 93
DL reaction	3 69	3 69
Max +LL reaction	0 72	0 72
Max +total reaction (factored)	5 58	5 58

DEFLECTIONS:

Initial load (in)	at	8 58 ft	=	-0 076	L/D	=	2702
Live load (in)	at	8.58 ft	=	-0 011	L/D	=	19179
Post Comp load (in)	at	8 58 ft	=	-0 037	L/D	=	5588

Net Total load (in)	at	8 58 ft	=	-0 113	L/D =	1821

Gravity Beam Design

RAM Steel v11 0
DataBase roof framing under units
Building Code IBC

0265

02/07/08 15 01 21
Steel Code AISC LRFD

Floor Type: Roof **Beam Number = 16**

SPAN INFORMATION (ft): I-End (25.46,0.00) J-End (25.46,17.17)

Beam Size (User Selected) = W14X22 Fy = 50 0 ksi
Total Beam Length (ft) = 17 17

COMPOSITE PROPERTIES (Not Shored):

		Left			Right
Concrete thickness (in)		3 25			3 25
Unit weight concrete (pcf)		115 00			115 00
f'c (ksi)		3 00			3 00
Decking Orientation		perpendicular			perpendicular
Decking type		VERCO W3 Formlok			VERCO W3 Formlok
beff (in)	=	31 75	Y bar(in)	=	13 16
Mnf (kip-ft)	=	286 35	Mn (kip-ft)	=	227 57
C (kips)	=	106 10	PNA (in)	=	11 46
Ieff (in4)	=	501 87	Itr (in4)	=	675 98
Stud length (in)	=	5 00	Stud diam (in)	=	0 75

Stud Capacity (kips) Qn = 13 3
# of studs Max = 17 Partial = 17 Actual = 17
Number of Stud Rows = 1 Percent of Full Composite Action = 40 32

LINE LOADS (k/ft):

Load	Dist	DL	CDL	LL	Red%	Type	CLL
1	0 000	0 280	0 225	0 084	0 0%	Roof	0 000
	17 166	0 280	0 225	0 084			0 000
2	0 000	0 033	0 027	0 010	0 0%	Roof	0 000
	17 166	0 033	0 027	0 010			0 000

SHEAR (Ultimate): Max Vu (1.2DL+1.6LL) = 4.52 kips 0.90Vn = 85.08 kips

MOMENTS (Ultimate):

Span	Cond	LoadCombo	Mu kip-ft	@ ft	Lb ft	Cb	Phi	Phi*Mn kip-ft
Center	PreCmp+	1 4DL	13 0	8 6	0 0	1 00	0 90	124 50
	Init DL	1 4DL	13 0	8 6	---	---		
	Max +	1 2DL+1 6LL	19 4	8 6	---	---	0 85	193 44
Controlling		1 4DL	13 0	8 6	0 0	1 00	0 90	124 50

REACTIONS (kips):

	Left	Right
Initial reaction	2 16	2 16
DL reaction	2 69	2 69
Max +LL reaction	0 81	0 81
Max +total reaction (factored)	4 52	4 52

DEFLECTIONS:

Initial load (in)	at	8 58 ft	=	-0 085	L/D	=	2415
Live load (in)	at	8 58 ft	=	-0 013	L/D	=	16294
Post Comp load (in)	at	8 58 ft	=	-0 021	L/D	=	9875

Net Total load (in)	at	8 58 ft	=	-0 106	L/D	=	1941

Gravity Beam Design

RAM Steel v11 0
DataBase roof framing under units
Building Code IBC

02/07/08 15 01 21
Steel Code AISC LRFD

Floor Type: Roof **Beam Number = 17**

SPAN INFORMATION (ft): I-End (25.46,17.17) J-End (25.46,34.33)

Beam Size (User Selected) = W14X22 Fy = 50 0 ksi
Total Beam Length (ft) = 17 17

COMPOSITE PROPERTIES (Not Shored):

		Left			Right
Concrete thickness (in)		3 25			3 25
Unit weight concrete (pcf)		115 00			115 00
f'c (ksi)		3 00			3 00
Decking Orientation		perpendicular			perpendicular
Decking type		VERCO W3 Formlok			VERCO W3 Formlok
beff (in)	=	31 38	Y bar(in)	=	13 13
Mnf (kip-ft)	=	285 14	Mn (kip-ft)	=	227 51
C (kips)	=	106 10	PNA (in)	=	11 46
Ieff (in4)	=	502 02	Itr (in4)	=	673 41
Stud length (in)	=	5 00	Stud diam (in)	=	0 75

Stud Capacity (kips) Qn = 13 3
# of studs Max = 17 Partial = 17 Actual = 17
Number of Stud Rows = 1 Percent of Full Composite Action = 40 79

LINE LOADS (k/ft):

Load	Dist	DL	CDL	LL	Red%	Type	CLL
1	0 000	0 150	0 000	0 000	0 0%	Red	0 000
	17 166	0 150	0 000	0 000			0 000
2	0 000	0 141	0 113	0 042	0 0%	Roof	0 000
	17 166	0 141	0 113	0 042			0 000
3	0 000	0 033	0 027	0 010	0 0%	Roof	0 000
	17 166	0 033	0 027	0 010			0 000

SHEAR (Ultimate): Max Vu (1.2DL+1.6LL) = 4.05 kips 0.90Vn = 85.08 kips

MOMENTS (Ultimate):

Span	Cond	LoadCombo	Mu kip-ft	@ ft	Lb ft	Cb	Phi	Phi*Mn kip-ft
Center	PreCmp+	1 4DL	7 2	8 6	0 0	1 00	0 90	124 50
	Init DL	1 4DL	7 2	8 6	---	---		
	Max +	1 2DL+1 6LL	17 4	8 6	---	---	0 85	193 38
Controlling		1 2DL+1 6LL	17 4	8 6	---	---	0 85	193 38

REACTIONS (kips):

	Left	Right
Initial reaction	1 20	1 20
DL reaction	2 78	2 78
Max +LL reaction	0 45	0 45
Max +total reaction (factored)	4 05	4 05

DEFLECTIONS:

Initial load (in) at 8 58 ft = -0 047 L/D = 4349

Live load (in)	at	8 58 ft	=	-0 007	L/D	=	29346
Post Comp load (in)	at	8 58 ft	=	-0 032	L/D	=	6495
Net Total load (in)	at	8 58 ft	=	-0 079	L/D	=	2605

Gravity Beam Design

RAM Steel v11 0
DataBase roof framing under units
Building Code IBC

02/07/08 15 01 21
Steel Code AISC LRFD

Floor Type: Roof **Beam Number = 18**

SPAN INFORMATION (ft): I-End (25.46,34.33) J-End (25.46,52.58)

Beam Size (User Selected) = W14X22 Fy = 50 0 ksi
Total Beam Length (ft) = 18 25

COMPOSITE PROPERTIES (Not Shored):

		Left			Right
Concrete thickness (in)		3 25			3 25
Unit weight concrete (pcf)		115 00			115 00
f'c (ksi)		3 00			3 00
Decking Orientation		perpendicular			perpendicular
Decking type		VERCO W3 Formlok			VERCO W3 Formlok
beff (in)	=	33 38	Y bar(in)	=	13 30
Mnf (kip-ft)	=	291 66	Mn (kip-ft)	=	235 45
C (kips)	=	119 36	PNA (in)	=	12 04
Ieff (in4)	=	519 48	Itr (in4)	=	686 86
Stud length (in)	=	5 00	Stud diam (in)	=	0 75

Stud Capacity (kips) Qn = 13 3
# of studs Max = 18 Partial = 18 Actual = 18
Number of Stud Rows = 1 Percent of Full Composite Action = 43 15

LINE LOADS (k/ft):

Load	Dist	DL	CDL	LL	Red%	Type	CLL
1	0 000	0 280	0 225	0 084	0 0%	Roof	0 000
	18 250	0 280	0 225	0 084			0 000
2	0 000	0 033	0 027	0 010	0 0%	Roof	0 000
	18 250	0 033	0 027	0 010			0 000

SHEAR (Ultimate): Max Vu (1.2DL+1.6LL) = 4.80 kips 0.90Vn = 85.08 kips

MOMENTS (Ultimate):

Span	Cond	LoadCombo	Mu kip-ft	@ ft	Lb ft	Cb	Phi	Phi*Mn kip-ft
Center	PreCmp+	1 4DL	14 7	9 1	0 0	1 00	0 90	124 50
	Init DL	1 4DL	14 7	9 1	---	---		
	Max +	1 2DL+1 6LL	21 9	9 1	---	---	0 85	200 14
Controlling		1 4DL	14 7	9 1	0 0	1 00	0 90	124 50

REACTIONS (kips).

	Left	Right
Initial reaction	2 30	2 30
DL reaction	2 86	2 86
Max +LL reaction	0 86	0 86
Max +total reaction (factored)	4 80	4 80

DEFLECTIONS:

Initial load (in)	at	9 13 ft	=	-0 109	L/D	=	2010
Live load (in)	at	9 13 ft	=	-0 016	L/D	=	14037
Post Comp load (in)	at	9 13 ft	=	-0 026	L/D	=	8507

Net Total load (in)	at	9 13 ft	=	-0 135	L/D	= 1626

Gravity Beam Design

1.2D 1.6S
w/ Mech
1271

RAM Steel v11 0
DataBase roof framing under units
Building Code IBC

02/07/08 15 00 05
Steel Code AISC LRFD

Floor Type: Roof **Beam Number = 3**

SPAN INFORMATION (ft): I-End (0.00,17.17) J-End (25.46,17.17)

Beam Size (User Selected) = W16X31 Fy = 50 0 ksi
Total Beam Length (ft) = 25 46
Cantilever on right (ft) = 8 42

COMPOSITE PROPERTIES (Not Shored):

		Left			Right
Concrete thickness (in)		3 25			3 25
Unit weight concrete (pcf)		115 00			115 00
f'c (ksi)		3 00			3 00
Decking Orientation		parallel			parallel
Decking type		VERCO W3 Formlok			VERCO W3 Formlok
beff (in)	=	51 13	Y bar(in)	=	15 28
Mnf (kip-ft)	=	465 65	Mn (kip-ft)	=	330 54
C (kips)	=	106 10	PNA (in)	=	11 81
Ieff (in4)	=	801 91	Itr (in4)	=	1228 13
Stud length (in)	=	5 00	Stud diam (in)	=	0 75

Stud Capacity (kips) Qn = 17 7
# of studs Max = 45 Partial = 28 Actual = 28
Number of Stud Rows = 1 Percent of Full Composite Action = 25 04

POINT LOADS (kips):

Dist	DL	CDL	RedLL	Red%	NonRLL	StorLL	Red%	RoofLL	Red%	CLL
3 750	10 71	5 17	0 00	0 0	0 00	0 00	0 0	3 73	Snow	0 00
11 250	5 94	3 05	0 00	0 0	0 00	0 00	0 0	1 49	Snow	0 00
11 250	5 94	3 05	0 00	0 0	0 00	0 00	0 0	1 53	Snow	0 00
21 228	3 69	1 93	0 00	0 0	0 00	0 00	0 0	0 90	Snow	0 00
25 458	2 78	1 20	0 00	0 0	0 00	0 00	0 0	0 56	Snow	0 00
25 458	2 69	2 16	0 00	0 0	0 00	0 00	0 0	1 04	Snow	0 00

SHEAR (Ultimate): Max Vu (1.2DL+1.6LL) = 22.69 kips 0.90Vn = 118.06 kips

MOMENTS (Ultimate):

Span	Cond	LoadCombo	Mu kip-ft	@ ft	Lb ft	Cb	Phi	Phi*Mn kip-ft
Center	PreCmp+	1 4DL	20 8	3 8	7 5	1 32	0 90	202 50
	PreCmp-	1 4DL	-51 0	17 0	5 8	1 87	0 90	202 50
	Init DL	1 4DL	-51 0	17 0	---	---		
	Max +	1 2DL+1 6LL	63 1	3 8	---	---	0 85	280 96
	Max -	1 2DL+1 6LL	-101 4	17 0	5 8	1 71	0 90	202 50
Right	PreCmp-	1 4DL	-51 0	17 0	4 2	1 00	0 90	201 88
	Max -	1 2DL+1 6LL	-101 4	17 0	4 2	1 00	0 90	201 88
Controlling		1 2DL+1 6LL	-101 4	17 0	4 2	1 00	0 90	201 88

REACTIONS (kips):

	Left	Right
Initial reaction	3 97	12 60
DL reaction	8 79	22 96

	Left	Right
Max +LL reaction	3 93	6 34
Max -LL reaction	-1 01	0 00
Max +total reaction (factored)	16 83	37 69

DEFLECTIONS:

Center span:

Initial load (in)	at	5 96 ft	=	-0 038	L/D	=	5413
Live load (in)	at	7 24 ft	=	-0 037	L/D	=	5561
Post Comp load (in)	at	7 24 ft	=	-0 068	L/D	=	3004
Net Total load (in)	at	7 24 ft	=	-0 105	L/D	=	1945

Right cantilever:

Init load (in)	=	-0 184	L/D	=	1095
Pos Live load (in)	=	-0 121	L/D	=	1670
Neg Live load (in)	=	0 058	L/D	=	3502
Pos Post Comp load (in)	=	-0 193	L/D	=	1045
Pos Total load (in)	=	-0 378	L/D	=	535

Gravity Beam Design

RAM Steel v11 0
DataBase roof framing under units
Building Code IBC

0273
02/07/08 15 00 05
Steel Code AISC LRFD

Floor Type: Roof **Beam Number = 5**

SPAN INFORMATION (ft): I-End (0.00,34.33) J-End (25.46,34.33)

Beam Size (User Selected) = W16X31 Fy = 50 0 ksi
Total Beam Length (ft) = 25 46
Cantilever on right (ft) = 8 42

COMPOSITE PROPERTIES (Not Shored):

		Left			Right
Concrete thickness (in)		3 25			3 25
Unit weight concrete (pcf)		115 00			115 00
f'c (ksi)		3 00			3 00
Decking Orientation		parallel			parallel
Decking type		VERCO W3 Formlok			VERCO W3 Formlok
beff (in)	=	51 13	Y bar(in)	=	15 28
Mnf (kip-ft)	=	465 65	Mn (kip-ft)	=	330 54
C (kips)	=	106 10	PNA (in)	=	11 81
Ieff (in4)	=	801 91	Itr (in4)	=	1228 13
Stud length (in)	=	5 00	Stud diam (in)	=	0 75

Stud Capacity (kips) Qn = 17 7
# of studs Max = 45 Partial = 28 Actual = 28
Number of Stud Rows = 1 Percent of Full Composite Action = 25 03

POINT LOADS (kips):

Dist	DL	CDL	RedLL	Red%	NonRLL	StorLL	Red%	RoofLL	Red%	CLL
3 750	3 41	2 75	0 00	0 0	0 00	0 00	0 0	1 98	Snow	0 00
3 750	5 36	2 58	0 00	0 0	0 00	0 00	0 0	1 86	Snow	0 00
11 250	4 03	3 24	0 00	0 0	0 00	0 00	0 0	1 62	Snow	0 00
11 250	5 94	3 05	0 00	0 0	0 00	0 00	0 0	1 49	Snow	0 00
21 228	3 69	1 93	0 00	0 0	0 00	0 00	0 0	0 90	Snow	0 00
25 458	2 86	2 30	0 00	0 0	0 00	0 00	0 0	1 11	Snow	0 00
25 458	2 78	1 20	0 00	0 0	0 00	0 00	0 0	0 56	Snow	0 00

SHEAR (Ultimate): Max Vu (1.2DL+1.6LL) = 20.96 kips 0.90Vn = 118.06 kips

MOMENTS (Ultimate):

Span	Cond	LoadCombo	Mu kip-ft	@ ft	Lb ft	Cb	Phi	Phi*Mn kip-ft
Center	PreCmp+	1 4DL	21 5	3 8	7 5	1 32	0 90	202 50
	PreCmp-	1 4DL	-52 6	17 0	5 8	1 87	0 90	202 50
	Init DL	1 4DL	-52 6	17 0	---	---		
	Max +	1 2DL+1 6LL	53 8	3 8	---	---	0 85	280 96
	Max -	1 2DL+1 6LL	-104 0	17 0	5 8	1 57	0 90	202 50
Right	PreCmp-	1 4DL	-52 6	17 0	4 2	1 00	0 90	201 88
	Max -	1 2DL+1 6LL	-104 0	17 0	4 2	1 00	0 90	201 88
Controlling		1 2DL+1 6LL	-104 0	17 0	4 2	1 00	0 90	201 88

REACTIONS (kips):

	Left	Right
Initial reaction	4 09	12 96
DL reaction	6 54	21 53
Max +LL reaction	4 05	6 52
Max -LL reaction	-1 05	0 00
Max +total reaction (factored)	14 33	36 26

DEFLECTIONS:

Center span:

Initial load (in)	at	6 90 ft	=	-0 039	L/D	=	5282
Live load (in)	at	6 90 ft	=	-0 037	L/D	=	5475
Post Comp load (in)	at	6 90 ft	=	-0 045	L/D	=	4512
Net Total load (in)	at	6 90 ft	=	-0 084	L/D	=	2433

Right cantilever:

Init load (in)	=	-0 191	L/D	=	1060
Pos Live load (in)	=	-0 125	L/D	=	1619
Neg Live load (in)	=	0 059	L/D	=	3397
Pos Post Comp load (in)	=	-0 236	L/D	=	855
Pos Total load (in)	=	-0 427	L/D	=	473

Gravity Beam Design

RAM Steel v11 0
DataBase roof framing under units
Building Code IBC

0275

02/07/08 15 00 05
Steel Code AISC LRFD

Floor Type: Roof **Beam Number = 6**

SPAN INFORMATION (ft): I-End (3.75,0.00) J-End (3.75,17.17)

Beam Size (User Selected) = W14X22 Fy = 50 0 ksi
Total Beam Length (ft) = 17 17

COMPOSITE PROPERTIES (Not Shored):

		Left			Right
Concrete thickness (in)		3 25			3 25
Unit weight concrete (pcf)		115 00			115 00
f'c (ksi)		3 00			3 00
Decking Orientation		perpendicular			perpendicular
Decking type		VERCO W3 Formlok			VERCO W3 Formlok
beff (in)	=	48 25	Y bar(in)	=	14.31
Mnf (kip-ft)	=	318 59	Mn (kip-ft)	=	229 56
C (kips)	=	106 10	PNA (in)	=	11 46
Ieff (in4)	=	522 69	Itr (in4)	=	765 09
Stud length (in)	=	5 00	Stud diam (in)	=	0 75

Stud Capacity (kips) Qn = 13 3
# of studs Max = 17 Partial = 17 Actual = 17
Number of Stud Rows = 1 Percent of Full Composite Action = 32 66

LINE LOADS (k/ft):

Load	Dist	DL	CDL	LL	Red%	Type	CLL
1	0 000	0 250	0 000	0 000	0 0%	Red	0 000
	17 166	0 250	0 000	0 000			0 000
2	0 000	0 374	0 301	0 000	---	Snow	0 000
	17 166	0 374	0 301	0 000			0 000
3	0 000	0 000	0 000	0 199	---	Snow	0 000
	17 166	0 000	0 000	0 199			0 000
4	0 000	0 000	0 000	0 035	---	Snow	0 000
	5 760	0 000	0 000	0 018			0 000
5	5 760	0 000	0 000	0 018	---	Snow	0 000
	17 166	0 000	0 000	0 018			0 000

SHEAR (Ultimate): Max Vu (1.2DL+1.6LL) = 9.48 kips 0.90Vn = 85.08 kips

MOMENTS (Ultimate):

Span	Cond	LoadCombo	Mu kip-ft	@ ft	Lb ft	Cb	Phi	Phi*Mn kip-ft
Center	PreCmp+	1 4DL	15.5	8 6	0 0	1 00	0 90	124 50
	Init DL	1 4DL	15 5	8 6	---	---		
	Max +	1 2DL+1 6LL	40 4	8 6	---	---	0 85	195 12
Controlling		1 2DL+1 6LL	40 4	8 6	---	---	0 85	195 12

REACTIONS (kips):

	Left	Right
Initial reaction	2 58	2 58
DL reaction	5 36	5.36
Max +LL reaction	1 90	1 87

	Left	Right
Max +total reaction (factored)	9 48	9 41

DEFLECTIONS:

Initial load (in)	at	8 58 ft	=	-0 102	L/D	=	2022
Live load (in)	at	8 58 ft	=	-0 028	L/D	=	7324
Post Comp load (in)	at	8 58 ft	=	-0 070	L/D	=	2952
Net Total load (in)	at	8 58 ft	=	-0 172	L/D	=	1200

Gravity Beam Design

RAM Steel v11 0
DataBase roof framing under units
Building Code IBC

0277

02/07/08 15 00 05
Steel Code AISC LRFD

Floor Type: Roof **Beam Number = 7**

SPAN INFORMATION (ft): I-End (3.75,17.17) J-End (3.75,34.33)

Beam Size (User Selected) = W14X22 Fy = 50 0 ksi
Total Beam Length (ft) = 17 17

COMPOSITE PROPERTIES (Not Shored):

		Left			**Right**
Concrete thickness (in)		3 25			3 25
Unit weight concrete (pcf)		115 00			115 00
f'c (ksi)		3 00			3 00
Decking Orientation		perpendicular			perpendicular
Decking type		VERCO W3 Formlok			VERCO W3 Formlok
beff (in)	=	48 25	Y bar(in)	=	14 31
Mnf (kip-ft)	=	318 59	Mn (kip-ft)	=	229 56
C (kips)	=	106 10	PNA (in)	=	11 46
Ieff (in4)	=	522 69	Itr (in4)	=	765 09
Stud length (in)	=	5 00	Stud diam (in)	=	0 75

Stud Capacity (kips) Qn = 13 3
# of studs Max = 17 Partial = 17 Actual = 17
Number of Stud Rows = 1 Percent of Full Composite Action = 32 69

LINE LOADS (k/ft):

Load	Dist	DL	CDL	LL	Red%	Type	CLL
1	0 000	0 250	0 000	0 000	0 0%	Red	0 000
	17 166	0 250	0 000	0 000			0 000
2	0 000	0 374	0 301	0 000	---	Snow	0 000
	17 166	0 374	0 301	0 000			0 000
3	0 000	0 000	0 000	0 199	---	Snow	0 000
	17 166	0 000	0 000	0 199			0 000
4	0 000	0 000	0 000	0 018	---	Snow	0 000
	17 166	0 000	0 000	0 018			0 000

SHEAR (Ultimate): Max Vu (1.2DL+1.6LL) = 9.40 kips 0.90Vn = 85.08 kips

MOMENTS (Ultimate):

Span	Cond	LoadCombo	Mu kip-ft	@ ft	Lb ft	Cb	Phi	Phi*Mn kip-ft
Center	PreCmp+	1 4DL	15 5	8 6	0 0	1 00	0 90	124 50
	Init DL	1 4DL	15 5	8 6	---	---		
	Max +	1 2DL+1 6LL	40 4	8 6	---	---	0 85	195 12
Controlling		1 2DL+1 6LL	40 4	8 6	---	---	0 85	195 12

REACTIONS (kips):

	Left	**Right**
Initial reaction	2 58	2 58
DL reaction	5 36	5 36
Max +LL reaction	1 86	1 86
Max +total reaction (factored)	9 40	9 40

DEFLECTIONS:

Initial load (in)	at	8 58 ft	=	-0 102	L/D =	2022
Live load (in)	at	8 58 ft	=	-0 028	L/D =	7375
Post Comp load (in)	at	8 58 ft	=	-0 070	L/D =	2960
Net Total load (in)	at	8 58 ft	=	-0 171	L/D =	1201

Gravity Beam Design

RAM Steel v11 0
DataBase roof framing under units
Building Code IBC

6279

02/07/08 15 00 05
Steel Code AISC LRFD

Floor Type: Roof **Beam Number = 8**

SPAN INFORMATION (ft): I-End (3.75,34.33) J-End (3.75,52.58)

Beam Size (User Selected) = W14X22 Fy = 50 0 ksi
Total Beam Length (ft) = 18 25

COMPOSITE PROPERTIES (Not Shored):

		Left			**Right**
Concrete thickness (in)		3 25			3 25
Unit weight concrete (pcf)		115 00			115 00
f'c (ksi)		3 00			3 00
Decking Orientation		perpendicular			perpendicular
Decking type		VERCO W3 Formlok			VERCO W3 Formlok
beff (in)	=	49 88	Y bar(in)	=	14 39
Mnf (kip-ft)	=	319 75	Mn (kip-ft)	=	229 68
C (kips)	=	106 10	PNA (in)	=	11 46
Ieff (in4)	=	526 56	Itr (in4)	=	771 85
Stud length (in)	=	5 00	Stud diam (in)	=	0 75

Stud Capacity (kips) Qn = 13 3
# of studs Max = 18 Partial = 18 Actual = 18
Number of Stud Rows = 1 Percent of Full Composite Action = 32 70

LINE LOADS (k/ft):

Load	Dist	DL	CDL	LL	Red%	Type	CLL
1	0 000	0 374	0 301	0 000	---	Snow	0 000
	18 250	0 374	0 301	0 000			0 000
2	0 000	0 000	0 000	0 199	---	Snow	0 000
	18 250	0 000	0 000	0 199			0 000
3	0 000	0 000	0 000	0 018	---	Snow	0 000
	12 490	0 000	0 000	0 018			0 000
4	12 490	0 000	0 000	0 018	---	Snow	0 000
	18 250	0 000	0 000	0 035			0 000

SHEAR (Ultimate): Max Vu (1.2DL+1.6LL) = 7.33 kips 0.90Vn = 85.08 kips

MOMENTS (Ultimate):

Span	Cond	LoadCombo	Mu kip-ft	@ ft	Lb ft	Cb	Phi	Phi*Mn kip-ft
Center	PreCmp+	1 4DL	17 5	9 1	0 0	1 00	0 90	124 50
	Init DL	1 4DL	17 5	9 1	---	---		
	Max +	1 2DL+1 6LL	33 2	9 1	---	---	0 85	195 23
Controlling		1 2DL+1 6LL	33 2	9 1	---	---	0 85	195 23

REACTIONS (kips):

	Left	**Right**
Initial reaction	2 75	2 75
DL reaction	3 41	3 41
Max +LL reaction	1 98	2 02
Max +total reaction (factored)	7 27	7 33

DEFLECTIONS:

Initial load (in)	at	9 13 ft	=	-0 130	L/D	=	1683
Live load (in)	at	9 13 ft	=	-0 036	L/D	=	6145
Post Comp load (in)	at	9 13 ft	=	-0 048	L/D	=	4602
Net Total load (in)	at	9 13 ft	=	-0 178	L/D	=	1232

Gravity Beam Design

RAM Steel v11 0
DataBase roof framing under units
Building Code IBC

0281

02/07/08 15 00 05
Steel Code AISC LRFD

Floor Type: Roof **Beam Number = 9**

SPAN INFORMATION (ft): I-End (11.25,0.00) J-End (11.25,17.17)

Beam Size (User Selected) = W14X22 Fy = 50 0 ksi
Total Beam Length (ft) = 17 17

COMPOSITE PROPERTIES (Not Shored):

		Left			**Right**
Concrete thickness (in)		3 25			3 25
Unit weight concrete (pcf)		115 00			115 00
f'c (ksi)		3 00			3 00
Decking Orientation		perpendicular			perpendicular
Decking type		VERCO W3 Formlok			VERCO W3 Formlok
beff (in)	=	51 50	Y bar(in)	=	14 48
Mnf (kip-ft)	=	320 84	Mn (kip-ft)	=	229 80
C (kips)	=	106 10	PNA (in)	=	11 46
Ieff (in4)	=	530 27	Itr (in4)	=	778 35
Stud length (in)	=	5 00	Stud diam (in)	=	0 75

Stud Capacity (kips) Qn = 13 3
# of studs Max = 17 Partial = 17 Actual = 17
Number of Stud Rows = 1 Percent of Full Composite Action = 32 24

LINE LOADS (k/ft):

Load	Dist	DL	CDL	LL	Red%	Type	CLL
1	0 000	0 250	0 000	0 000	0 0%	Red	0 000
	17 166	0 250	0 000	0 000			0 000
2	0 000	0 442	0 356	0 000	---	Snow	0 000
	17 166	0 442	0 356	0 000			0 000
3	0 000	0 000	0 000	0 272	---	Snow	0 000
	5 760	0 000	0 000	0 136			0 000
4	0 000	0 000	0 000	0 037	---	Snow	0 000
	17 166	0 000	0 000	0 037			0 000
5	5 760	0 000	0 000	0 136	---	Snow	0 000
	17 166	0 000	0 000	0 136			0 000

SHEAR (Ultimate): Max Vu (1.2DL+1.6LL) = 10.07 kips 0.90Vn = 85.08 kips

MOMENTS (Ultimate):

Span	Cond	LoadCombo	Mu kip-ft	@ ft	Lb ft	Cb	Phi	Phi*Mn kip-ft
Center	PreCmp+	1 4DL	18 3	8 6	0 0	1 00	0 90	124 50
	Init DL	1 4DL	18 3	8 6	---	---		
	Max +	1 2DL+1 6LL	41 4	8 5	---	---	0 85	195 33
Controlling		1 2DL+1 6LL	41 4	8 5	---	---	0 85	195 33

REACTIONS (kips):

	Left	**Right**
Initial reaction	3 05	3 05
DL reaction	5 94	5 94
Max +LL reaction	1 84	1 53

	Left	Right
Max +total reaction (factored)	10 07	9 58

DEFLECTIONS:

Initial load (in)	at	8 58 ft	=	-0 120	L/D	=	1711
Live load (in)	at	8 58 ft	=	-0 024	L/D	=	8754
Post Comp load (in)	at	8 58 ft	=	-0 066	L/D	=	3108
Net Total load (in)	at	8 58 ft	=	-0 187	L/D	=	1104

Gravity Beam Design

RAM Steel v11 0
DataBase roof framing under units
Building Code IBC

0283

02/07/08 15 00 05
Steel Code AISC LRFD

Floor Type. Roof **Beam Number = 10**

SPAN INFORMATION (ft): I-End (11.25,17.17) J-End (11.25,34.33)

Beam Size (User Selected) = W14X22 Fy = 50 0 ksi
Total Beam Length (ft) = 17 17

COMPOSITE PROPERTIES (Not Shored):

						Left	**Right**
Concrete thickness (in)						3 25	3 25
Unit weight concrete (pcf)						115 00	115 00
f'c (ksi)						3 00	3 00
Decking Orientation						perpendicular	perpendicular
Decking type						VERCO W3 Formlok	VERCO W3 Formlok
beff (in)	=	51 50	Y bar(in)	=	14 48		
Mnf (kip-ft)	=	320 84	Mn (kip-ft)	=	229 80		
C (kips)	=	106 10	PNA (in)	=	11 46		
Ieff (in4)	=	530 27	Itr (in4)	=	778 35		
Stud length (in)	=	5 00	Stud diam (in)	=	0 75		

Stud Capacity (kips) Qn = 13 3
# of studs Max = 17 Partial = 17 Actual = 17
Number of Stud Rows = 1 Percent of Full Composite Action = 32 69

LINE LOADS (k/ft):

Load	Dist	DL	CDL	LL	Red%	Type	CLL
1	0 000	0 250	0 000	0 000	0 0%	Red	0 000
	17 166	0 250	0 000	0 000			0 000
2	0 000	0 442	0 356	0 000	---	Snow	0 000
	17 166	0 442	0 356	0 000			0 000
3	0 000	0 000	0 000	0 136	---	Snow	0 000
	17 166	0 000	0 000	0 136			0 000
4	0 000	0 000	0 000	0 037	---	Snow	0 000
	17 166	0 000	0 000	0 037			0 000

SHEAR (Ultimate): Max Vu (1.2DL+1.6LL) = 9.51 kips 0.90Vn = 85.08 kips

MOMENTS (Ultimate):

Span	Cond	LoadCombo	Mu kip-ft	@ ft	Lb ft	Cb	Phi	Phi*Mn kip-ft
Center	PreCmp+	1 4DL	18 3	8 6	0 0	1 00	0 90	124 50
	Init DL	1 4DL	18 3	8 6	---	---		
	Max +	1 2DL+1 6LL	40 8	8 6	---	---	0 85	195 33
Controlling		1 2DL+1 6LL	40 8	8 6	---	---	0 85	195 33

REACTIONS (kips)

	Left	**Right**
Initial reaction	3 05	3 05
DL reaction	5 94	5 94
Max +LL reaction	1 49	1 49
Max +total reaction (factored)	9 51	9 51

DEFLECTIONS:

Initial load (in)	at	8 58 ft	=	-0 120	L/D	=	1711
Live load (in)	at	8 58 ft	=	-0 022	L/D	=	9344
Post Comp load (in)	at	8 58 ft	=	-0 065	L/D	=	3179
Net Total load (in)	at	8 58 ft	=	-0 185	L/D	=	1112

Gravity Beam Design

RAM Steel v11 0
DataBase roof framing under units
Building Code IBC

6285

02/07/08 15 00 05
Steel Code AISC LRFD

Floor Type: Roof **Beam Number = 11**

SPAN INFORMATION (ft): I-End (11.25,34.33) J-End (11.25,52.58)

Beam Size (User Selected) = W14X22 Fy = 50 0 ksi
Total Beam Length (ft) = 18 25

COMPOSITE PROPERTIES (Not Shored):

						Left	**Right**
Concrete thickness (in)						3 25	3 25
Unit weight concrete (pcf)						115 00	115 00
f'c (ksi)						3 00	3 00
Decking Orientation						perpendicular	perpendicular
Decking type						VERCO W3 Formlok	VERCO W3 Formlok
beff (in)	=	54 75	Y bar(in)	=	14 63		
Mnf (kip-ft)	=	322 82	Mn (kip-ft)	=	230 01		
C (kips)	=	106 10	PNA (in)	=	11 46		
Ieff (in4)	=	537 28	Itr (in4)	=	790 60		
Stud length (in)	=	5 00	Stud diam (in)	=	0 75		

Stud Capacity (kips) Qn = 13 3
# of studs Max = 18 Partial = 18 Actual = 18
Number of Stud Rows = 1 Percent of Full Composite Action = 32 70

LINE LOADS (k/ft):

Load	Dist	DL	CDL	LL	Red%	Type	CLL
1	0 000	0 442	0 356	0 000	---	Snow	0 000
	18 250	0 442	0 356	0 000			0 000
2	0 000	0 000	0 000	0 136	---	Snow	0 000
	12 490	0 000	0 000	0 136			0 000
3	0 000	0 000	0 000	0 037	---	Snow	0 000
	18 250	0 000	0 000	0 037			0 000
4	12 490	0 000	0 000	0 136	---	Snow	0 000
	18 250	0 000	0 000	0 272			0 000

SHEAR (Ultimate): Max Vu (1.2DL+1.6LL) = 7.93 kips 0.90Vn = 85.08 kips

MOMENTS (Ultimate):

Span	Cond	LoadCombo	Mu kip-ft	@ ft	Lb ft	Cb	Phi	Phi*Mn kip-ft
Center	PreCmp+	1 4DL	20 7	9 1	0 0	1 00	0 90	124 50
	Init DL	1 4DL	20 7	9 1	---	---		
	Max +	1 2DL+1 6LL	34 2	9 2	---	---	0 85	195 51
Controlling		1 2DL+1 6LL	34 2	9 2	---	---	0 85	195 51

REACTIONS (kips).

	Left	**Right**
Initial reaction	3 24	3 24
DL reaction	4 03	4 03
Max +LL reaction	1 62	1 93
Max +total reaction (factored)	7 44	7 93

DEFLECTIONS:

Initial load (in)	at	9 13 ft	=	-0 154	L/D	=	1424
Live load (in)	at	9 13 ft	=	-0 029	L/D	=	7434
Post Comp load (in)	at	9 13 ft	=	-0 043	L/D	=	5058
Net Total load (in)	at	9 13 ft	=	-0 197	L/D	=	1111

Gravity Beam Design

RAM Steel v11 0
DataBase roof framing under units
Building Code IBC

0287
02/07/08 15 00 05
Steel Code AISC LRFD

Floor Type: Roof **Beam Number = 12**

SPAN INFORMATION (ft): I-End (17.04,0.00) J-End (17.04,17.17)

Beam Size (Optimum) = W10X12 Fy = 50 0 ksi
Total Beam Length (ft) = 17 17

COMPOSITE PROPERTIES (Not Shored):

		Left			Right
Concrete thickness (in)		3 25			3 25
Unit weight concrete (pcf)		115 00			115 00
f'c (ksi)		3 00			3 00
Decking Orientation		perpendicular			perpendicular
Decking type		VERCO W3 Formlok			VERCO W3 Formlok
beff (in)	=	51 50	Y bar(in)	=	12 43
Mnf (kip-ft)	=	155 04	Mn (kip-ft)	=	123 97
C (kips)	=	106 10	PNA (in)	=	9 69
Ieff (in4)	=	259 00	Itr (in4)	=	318 84
Stud length (in)	=	5 00	Stud diam (in)	=	0 75

Stud Capacity (kips) Qn = 13 3
# of studs Max = 17 Partial = 17 Actual = 17
Number of Stud Rows = 1 Percent of Full Composite Action = 58 49

LINE LOADS (k/ft):

Load	Dist	DL	CDL	LL	Red%	Type	CLL
1	0 000	0 472	0 380	0 000	---	Snow	0 000
	17 166	0 472	0 380	0 000			0 000
2	0 000	0 000	0 000	0 355	---	Snow	0 000
	5 760	0 000	0 000	0 178			0 000
3	5 760	0 000	0 000	0 178	---	Snow	0 000
	17 166	0 000	0 000	0 178			0 000

SHEAR (Ultimate): Max Vu (1.2DL+1.6LL) = 8.03 kips 0.90Vn = 50.63 kips

MOMENTS (Ultimate):

Span	Cond	LoadCombo	Mu kip-ft	@ ft	Lb ft	Cb	Phi	Phi*Mn kip-ft
Center	PreCmp+	1 4DL	19 6	8 6	0 0	1 00	0 90	46 94
	Init DL	1 4DL	19 6	8 6	---	---		
	Max +	1 2DL+1 6LL	32 1	8 5	---	---	0 85	105 38
Controlling		1 4DL	19 6	8 6	0 0	1 00	0 90	46 94

REACTIONS (kips):

	Left	Right
Initial reaction	3 26	3 26
DL reaction	4 05	4 05
Max +LL reaction	1 98	1 58
Max +total reaction (factored)	8 03	7 40

DEFLECTIONS:

Initial load (in) at 8 58 ft = -0 476 L/D = 433

Live load (in)	at	8 58 ft	=	-0 050	L/D =	4106
Post Comp load (in)	at	8 58 ft	=	-0 074	L/D =	2776
Net Total load (in)	at	8 58 ft	=	-0 550	L/D =	374

Gravity Beam Design

0289

RAM Steel v11 0
DataBase roof framing under units
Building Code IBC

02/07/08 15 00 05
Steel Code AISC LRFD

Floor Type: Roof **Beam Number = 13**

SPAN INFORMATION (ft): I-End (17.04,17.17) J-End (17.04,34.33)

Beam Size (User Selected) = W14X22 Fy = 50 0 ksi
Total Beam Length (ft) = 17 17

COMPOSITE PROPERTIES (Not Shored):

		Left			Right
Concrete thickness (in)		3 25			3 25
Unit weight concrete (pcf)		115 00			115 00
f'c (ksi)		3 00			3 00
Decking Orientation		perpendicular			perpendicular
Decking type		VERCO W3 Formlok			VERCO W3 Formlok
beff (in)	=	50 87	Y bar(in)	=	14 45
Mnf (kip-ft)	=	320 42	Mn (kip-ft)	=	229 75
C (kips)	=	106 10	PNA (in)	=	11 46
Ieff (in4)	=	528 85	Itr (in4)	=	775 86
Stud length (in)	=	5 00	Stud diam (in)	=	0 75

Stud Capacity (kips) Qn = 13 3
# of studs Max = 17 Partial = 17 Actual = 17
Number of Stud Rows = 1 Percent of Full Composite Action = 32 69

LINE LOADS (k/ft):

Load	Dist	DL	CDL	LL	Red%	Type	CLL
1	0 000	0 332	0 267	0 000	---	Snow	0 000
	17 166	0 332	0 267	0 000			0 000
2	0 000	0 000	0 000	0 125	---	Snow	0 000
	17 166	0 000	0 000	0 125			0 000

SHEAR (Ultimate): Max Vu (1.2DL+1.6LL) = 5.13 kips 0.90Vn = 85.08 kips

MOMENTS (Ultimate):

Span	Cond	LoadCombo	Mu kip-ft	@ ft	Lb ft	Cb	Phi	Phi*Mn kip-ft
Center	PreCmp+	1 4DL	13 8	8 6	0 0	1 00	0 90	124 50
	Init DL	1 4DL	13 8	8 6	---	---		
	Max +	1 2DL+1 6LL	22 0	8 6	---	---	0 85	195 29
Controlling		1 2DL+1 6LL	22 0	8 6	---	---	0 85	195 29

REACTIONS (kips):

	Left	Right
Initial reaction	2 29	2 29
DL reaction	2 85	2 85
Max +LL reaction	1 07	1 07
Max +total reaction (factored)	5 13	5 13

DEFLECTIONS:

Initial load (in)	at	8 58 ft	=	-0 090	L/D	=	2279
Live load (in)	at	8 58 ft	=	-0 016	L/D	=	12963
Post Comp load (in)	at	8 58 ft	=	-0 024	L/D	=	8528

Net Total load (in)	at	8 58 ft	=	-0 115	L/D	=	1799

Gravity Beam Design

6291

RAM Steel v11 0
DataBase roof framing under units
Building Code IBC

02/07/08 15 00 05
Steel Code AISC LRFD

Floor Type: Roof **Beam Number = 14**

SPAN INFORMATION (ft): I-End (17.04,34.33) J-End (17.04,52.58)

Beam Size (User Selected) = W14X22 Fy = 50 0 ksi
Total Beam Length (ft) = 18 25

COMPOSITE PROPERTIES (Not Shored):

		Left			Right
Concrete thickness (in)		3 25			3 25
Unit weight concrete (pcf)		115 00			115 00
f'c (ksi)		3 00			3 00
Decking Orientation		perpendicular			perpendicular
Decking type		VERCO W3 Formlok			VERCO W3 Formlok
beff (in)	=	54 75	Y bar(in)	=	14 63
Mnf (kip-ft)	=	322 82	Mn (kip-ft)	=	230 01
C (kips)	=	106 10	PNA (in)	=	11 46
Ieff (in4)	=	537 28	Itr (in4)	=	790 60
Stud length (in)	=	5 00	Stud diam (in)	=	0 75

Stud Capacity (kips) Qn = 13 3
# of studs Max = 18 Partial = 18 Actual = 18
Number of Stud Rows = 1 Percent of Full Composite Action = 32 70

LINE LOADS (k/ft):

Load	Dist	DL	CDL	LL	Red%	Type	CLL
1	0 000	0 472	0 380	0 000	---	Snow	0 000
	18 250	0 472	0 380	0 000			0 000
2	0 000	0 000	0 000	0 178	---	Snow	0 000
	12 490	0 000	0 000	0 178			0 000
3	12 490	0 000	0 000	0 178	---	Snow	0 000
	18 250	0 000	0 000	0 355			0 000

SHEAR (Ultimate): Max Vu (1.2DL+1.6LL) = 8.50 kips 0.90Vn = 85.08 kips

MOMENTS (Ultimate):

Span	Cond	LoadCombo	Mu kip-ft	@ ft	Lb ft	Cb	Phi	Phi*Mn kip-ft
Center	PreCmp+	1 4DL	22 2	9 1	0 0	1 00	0 90	124 50
	Init DL	1 4DL	22 2	9 1	---	---		
	Max +	1 2DL+1 6LL	36 2	9 2	---	---	0 85	195 51
Controlling		1 2DL+1 6LL	36 2	9 2	---	---	0 85	195 51

REACTIONS (kips).

	Left	Right
Initial reaction	3 47	3 47
DL reaction	4 31	4 31
Max +LL reaction	1 67	2 08
Max +total reaction (factored)	7 85	8 50

DEFLECTIONS:

Initial load (in) at 9 13 ft = -0 164 L/D = 1332

Live load (in)	at	9 13 ft	=	-0 031	L/D	=	7151
Post Comp load (in)	at	9 13 ft	=	-0 045	L/D	=	4822
Net Total load (in)	at	9 13 ft	=	-0 210	L/D	=	1044

Gravity Beam Design

RAM Steel v11 0
DataBase roof framing under units
Building Code IBC

0293

02/07/08 15 00 05
Steel Code AISC LRFD

Floor Type: Roof **Beam Number = 15**

SPAN INFORMATION (ft): I-End (21.23,17.17) J-End (21.23,34.33)

Beam Size (User Selected) = W14X22 Fy = 50 0 ksi
Total Beam Length (ft) = 17 17

COMPOSITE PROPERTIES (Not Shored):

		Left			**Right**
Concrete thickness (in)		3 25			3 25
Unit weight concrete (pcf)		115 00			115 00
f'c (ksi)		3 00			3 00
Decking Orientation		perpendicular			perpendicular
Decking type		VERCO W3 Formlok			VERCO W3 Formlok
beff (in)	=	50 50	Y bar(in)	=	14 43
Mnf (kip-ft)	=	320 17	Mn (kip-ft)	=	229 72
C (kips)	=	106 10	PNA (in)	=	11 46
Ieff (in4)	=	528 00	Itr (in4)	=	774 38
Stud length (in)	=	5 00	Stud diam (in)	=	0 75

Stud Capacity (kips) Qn = 13 3
# of studs Max = 17 Partial = 17 Actual = 17
Number of Stud Rows = 1 Percent of Full Composite Action = 32 69

LINE LOADS (k/ft):

Load	Dist	DL	CDL	LL	Red%	Type	CLL
1	0 000	0 150	0 000	0 000	0 0%	Red	0 000
	17 166	0 150	0 000	0 000			0 000
2	0 000	0 280	0 225	0 000	---	Snow	0 000
	17 166	0 280	0 225	0 000			0 000
3	0 000	0 000	0 000	0 105	---	Snow	0 000
	17 166	0 000	0 000	0 105			0 000

SHEAR (Ultimate): Max Vu (1.2DL+1.6LL) = 5.87 kips 0.90Vn = 85.08 kips

MOMENTS (Ultimate):

Span	Cond	LoadCombo	Mu kip-ft	@ ft	Lb ft	Cb	Phi	Phi*Mn kip-ft
Center	PreCmp+	1 4DL	11 6	8 6	0 0	1 00	0 90	124 50
	Init DL	1 4DL	11 6	8 6	---	---		
	Max +	1 2DL+1 6LL	25 2	8 6	---	---	0 85	195 27
Controlling		1 2DL+1 6LL	25 2	8 6	---	---	0 85	195 27

REACTIONS (kips):

	Left	**Right**
Initial reaction	1 93	1 93
DL reaction	3 69	3 69
Max +LL reaction	0 90	0 90
Max +total reaction (factored)	5 87	5 87

DEFLECTIONS:

Initial load (in) at 8 58 ft = -0 076 L/D = 2702

Live load (in)	at	8 58 ft	=	-0 013	L/D	=	15343
Post Comp load (in)	at	8 58 ft	=	-0 040	L/D	=	5209
Net Total load (in)	at	8 58 ft	=	-0 116	L/D	=	1779

Gravity Beam Design

RAM Steel v11 0
DataBase roof framing under units
Building Code IBC

02/07/08 15 00 05
Steel Code AISC LRFD

Floor Type: Roof **Beam Number = 16**

SPAN INFORMATION (ft): I-End (25.46,0.00) J-End (25.46,17.17)

Beam Size (User Selected) = W14X22 Fy = 50 0 ksi
Total Beam Length (ft) = 17 17

COMPOSITE PROPERTIES (Not Shored):

						Left	**Right**
Concrete thickness (in)						3 25	3 25
Unit weight concrete (pcf)						115 00	115 00
f'c (ksi)						3 00	3 00
Decking Orientation						perpendicular	perpendicular
Decking type						VERCO W3 Formlok	VERCO W3 Formlok
beff (in)	=	31 75	Y bar(in)	=	13 16		
Mnf (kip-ft)	=	286 35	Mn (kip-ft)	=	227 57		
C (kips)	=	106 10	PNA (in)	=	11 46		
Ieff (in4)	=	501 87	Itr (in4)	=	675 98		
Stud length (in)	=	5 00	Stud diam (in)	=	0 75		

Stud Capacity (kips) Qn = 13 3
# of studs Max = 17 Partial = 17 Actual = 17
Number of Stud Rows = 1 Percent of Full Composite Action = 39 45

LINE LOADS (k/ft):

Load	Dist	DL	CDL	LL	Red%	Type	CLL
1	0 000	0 280	0 225	0 000	---	Snow	0 000
	17 166	0 280	0 225	0 000			0 000
2	0 000	0 000	0 000	0 210	---	Snow	0 000
	5 760	0 000	0 000	0 105			0 000
3	5 760	0 000	0 000	0 105	---	Snow	0 000
	17 166	0 000	0 000	0 105			0 000
4	0 000	0 033	0 027	0 000	---	Snow	0 000
	17 166	0 033	0 027	0 000			0 000
5	0 000	0 000	0 000	0 013	---	Snow	0 000
	17 166	0 000	0 000	0 013			0 000

SHEAR (Ultimate): Max Vu (1.2DL+1.6LL) = 5.27 kips 0.90Vn = 85.08 kips

MOMENTS (Ultimate):

Span	Cond	LoadCombo	Mu kip-ft	@ ft	Lb ft	Cb	Phi	Phi*Mn kip-ft
Center	PreCmp+	1 4DL	13 0	8 6	0 0	1 00	0 90	124 50
	Init DL	1 4DL	13 0	8 6	---	---		
	Max +	1 2DL+1 6LL	21 2	8 5	---	---	0 85	193 44
Controlling		1 2DL+1 6LL	21 2	8 5	---	---	0 85	193 44

REACTIONS (kips):

	Left	**Right**
Initial reaction	2 16	2 16
DL reaction	2 69	2 69
Max +LL reaction	1 28	1 04

	Left	Right
Max +total reaction (factored)	5 27	4 90

DEFLECTIONS:

Initial load (in)	at	8 58 ft	=	-0 085	L/D	=	2415
Live load (in)	at	8 58 ft	=	-0 017	L/D	=	12106
Post Comp load (in)	at	8 58 ft	=	-0 025	L/D	=	8163
Net Total load (in)	at	8 58 ft	=	-0 111	L/D	=	1864

Gravity Beam Design

RAM Steel v11 0
DataBase roof framing under units
Building Code IBC

02/07/08 15 00 0
Steel Code AISC LRFI

Floor Type: Roof **Beam Number = 17**

SPAN INFORMATION (ft): I-End (25.46,17.17) J-End (25.46,34.33)

Beam Size (User Selected) = W14X22 Fy = 50 0 ksi
Total Beam Length (ft) = 17 17

COMPOSITE PROPERTIES (Not Shored):

		Left			Right
Concrete thickness (in)		3 25			3 25
Unit weight concrete (pcf)		115 00			115 00
f'c (ksi)		3 00			3 00
Decking Orientation		perpendicular			perpendicular
Decking type		VERCO W3 Formlok			VERCO W3 Formlok
beff (in)	=	31 38	Y bar(in)	=	13 13
Mnf (kip-ft)	=	285 14	Mn (kip-ft)	=	227 51
C (kips)	=	106 10	PNA (in)	=	11 46
Ieff (in4)	=	502 02	Itr (in4)	=	673 41
Stud length (in)	=	5 00	Stud diam (in)	=	0 75

Stud Capacity (kips) Qn = 13 3
# of studs Max = 17 Partial = 17 Actual = 17
Number of Stud Rows = 1 Percent of Full Composite Action = 40 79

LINE LOADS (k/ft):

Load	Dist	DL	CDL	LL	Red%	Type	CLL
1	0 000	0 150	0 000	0 000	0 0%	Red	0 000
	17 166	0 150	0 000	0 000			0 000
2	0 000	0 141	0 113	0 000	---	Snow	0 000
	17 166	0 141	0 113	0 000			0 000
3	0 000	0 000	0 000	0 053	---	Snow	0 000
	17 166	0 000	0 000	0 053			0 000
4	0 000	0 033	0 027	0 000	---	Snow	0 000
	17 166	0 033	0 027	0 000			0 000
5	0 000	0 000	0 000	0 013	---	Snow	0 000
	17 166	0 000	0 000	0 013			0 000

SHEAR (Ultimate): Max Vu (1.2DL+1.6LL) = 4.23 kips 0.90Vn = 85.08 kips

MOMENTS (Ultimate):

Span	Cond	LoadCombo	Mu kip-ft	@ ft	Lb ft	Cb	Phi	Phi*Mn kip-ft
Center	PreCmp+	1 4DL	7 2	8 6	0 0	1 00	0 90	124 50
	Init DL	1 4DL	7 2	8 6	---	---		
	Max +	1 2DL+1 6LL	18 2	8 6	---	---	0 85	193 38
Controlling		1 2DL+1 6LL	18 2	8 6	---	---	0 85	193 38

REACTIONS (kips):

	Left	Right
Initial reaction	1 20	1 20
DL reaction	2 78	2 78
Max +LL reaction	0 56	0 56

	Left	Right
Max +total reaction (factored)	4 23	4 23

DEFLECTIONS:

Initial load (in)	at	8 58 ft	=	-0 047	L/D	=	4349
Live load (in)	at	8 58 ft	=	-0 009	L/D	=	23477
Post Comp load (in)	at	8 58 ft	=	-0 033	L/D	=	6155
Net Total load (in)	at	8 58 ft	=	-0 081	L/D	=	2548

Gravity Beam Design

RAM Steel v11 0
DataBase roof framing under units
Building Code IBC

02/07/08 15 00 0
Steel Code AISC LRFD

Floor Type: Roof **Beam Number = 18**

SPAN INFORMATION (ft): I-End (25.46,34.33) J-End (25.46,52.58)

Beam Size (User Selected) = W14X22 Fy = 50 0 ksi
Total Beam Length (ft) = 18 25

COMPOSITE PROPERTIES (Not Shored):

		Left			Right
Concrete thickness (in)		3 25			3 25
Unit weight concrete (pcf)		115 00			115 00
f'c (ksi)		3 00			3 00
Decking Orientation		perpendicular			perpendicular
Decking type		VERCO W3 Formlok			VERCO W3 Formlok
beff (in)	=	33 38	Y bar(in)	=	13 30
Mnf (kip-ft)	=	291 66	Mn (kip-ft)	=	227 86
C (kips)	=	106 10	PNA (in)	=	11 46
Ieff (in4)	=	501 15	Itr (in4)	=	686 86
Stud length (in)	=	5 00	Stud diam (in)	=	0 75

Stud Capacity (kips) Qn = 13 3
# of studs Max = 18 Partial = 18 Actual = 18
Number of Stud Rows = 1 Percent of Full Composite Action = 38 36

LINE LOADS (k/ft):

Load	Dist	DL	CDL	LL	Red%	Type	CLL
1	0 000	0 280	0 225	0 000	---	Snow	0 000
	18 250	0 280	0 225	0 000			0 000
2	0 000	0 000	0 000	0 105	---	Snow	0 000
	12 490	0 000	0 000	0 105			0 000
3	12 490	0 000	0 000	0 105	---	Snow	0 000
	18 250	0 000	0 000	0 210			0 000
4	0 000	0 033	0 027	0 000	---	Snow	0 000
	18 250	0 033	0 027	0 000			0 000
5	0 000	0 000	0 000	0 013	---	Snow	0 000
	18 250	0 000	0 000	0 013			0 000

SHEAR (Ultimate): Max Vu (1.2DL+1.6LL) = 5.58 kips 0.90Vn = 85.08 kips

MOMENTS (Ultimate):

Span	Cond	LoadCombo	Mu kip-ft	@ ft	Lb ft	Cb	Phi	Phi*Mn kip-ft
Center	PreCmp+	1 4DL	14 7	9 1	0 0	1 00	0 90	124 50
	Init DL	1 4DL	14 7	9 1	---	---		
	Max +	1.2DL+1 6LL	24 0	9 2	---	---	0 85	193 68
Controlling		1.2DL+1 6LL	24 0	9 2	---	---	0 85	193 68

REACTIONS (kips):

	Left	Right
Initial reaction	2 30	2 30
DL reaction	2 86	2 86
Max +LL reaction	1 11	1 35

	Left	Right
Max +total reaction (factored)	5 20	5 58

DEFLECTIONS:

Initial load (in)	at	9 13 ft	=	-0 109	L/D	=	2010
Live load (in)	at	9 13 ft	=	-0 022	L/D	=	10141
Post Comp load (in)	at	9 13 ft	=	-0 032	L/D	=	6821
Net Total load (in)	at	9 13 ft	=	-0 141	L/D	=	1553

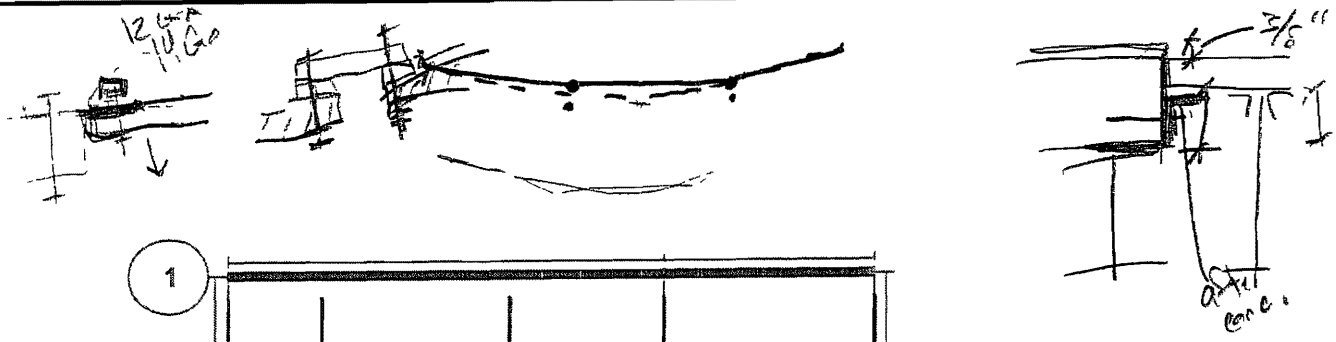

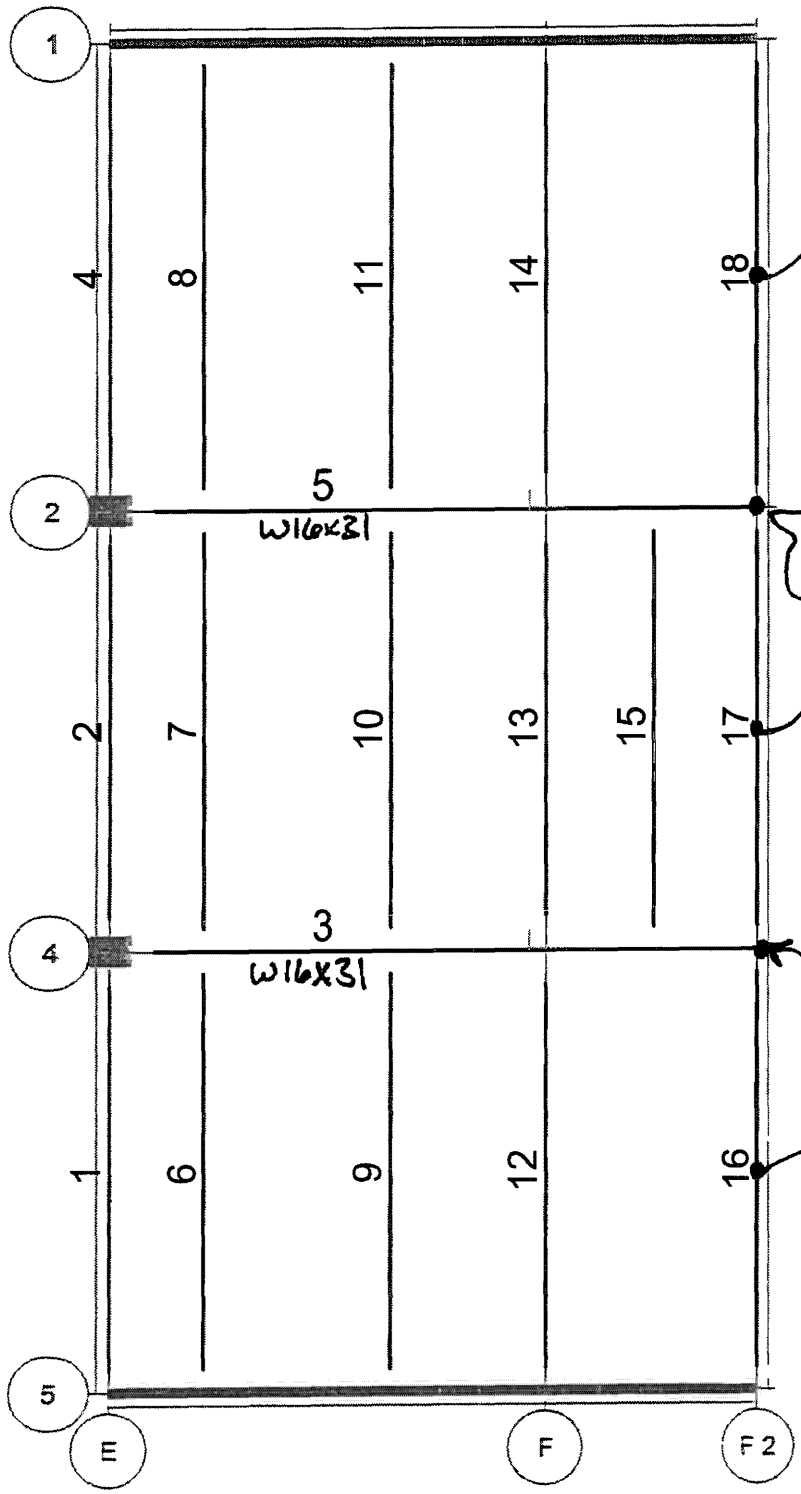

$\Delta = -0.14$ w/o mech
$\Delta = -0.14$ w/mech
$\Delta = -0.14$ w/mech + snow

$\Delta = -0.39$ - No mech
$\Delta = -0.49$ - w/ mech
$\Delta = -0.43$ - w/mech + snow

$\Delta = -0.06$ - w/o mech
$\Delta = -0.08$ - w/mech
$\Delta = -0.08$ - w/mech + snow
→ smaller b/c of extra lbs.

$\Delta = -0.38$ - no MECH
$\Delta = -0.35$ - w/ Mech
$\Delta = -0.38$ - w/Mech + Snow

$\Delta = -0.106$ - no Mech
$\Delta = -0.106$ - w/Mech
$\Delta = -0.111$ - w/Mech + Snow

$$\left.\begin{aligned} \Delta_{max\,@18} &= -0.43 - \frac{0.14}{2} = 0.5'' \\ \Delta_{max\,@16} &= -0.38 - \frac{0.111}{2} = 0.44'' \end{aligned}\right\} \text{TOTAL } \Delta$$

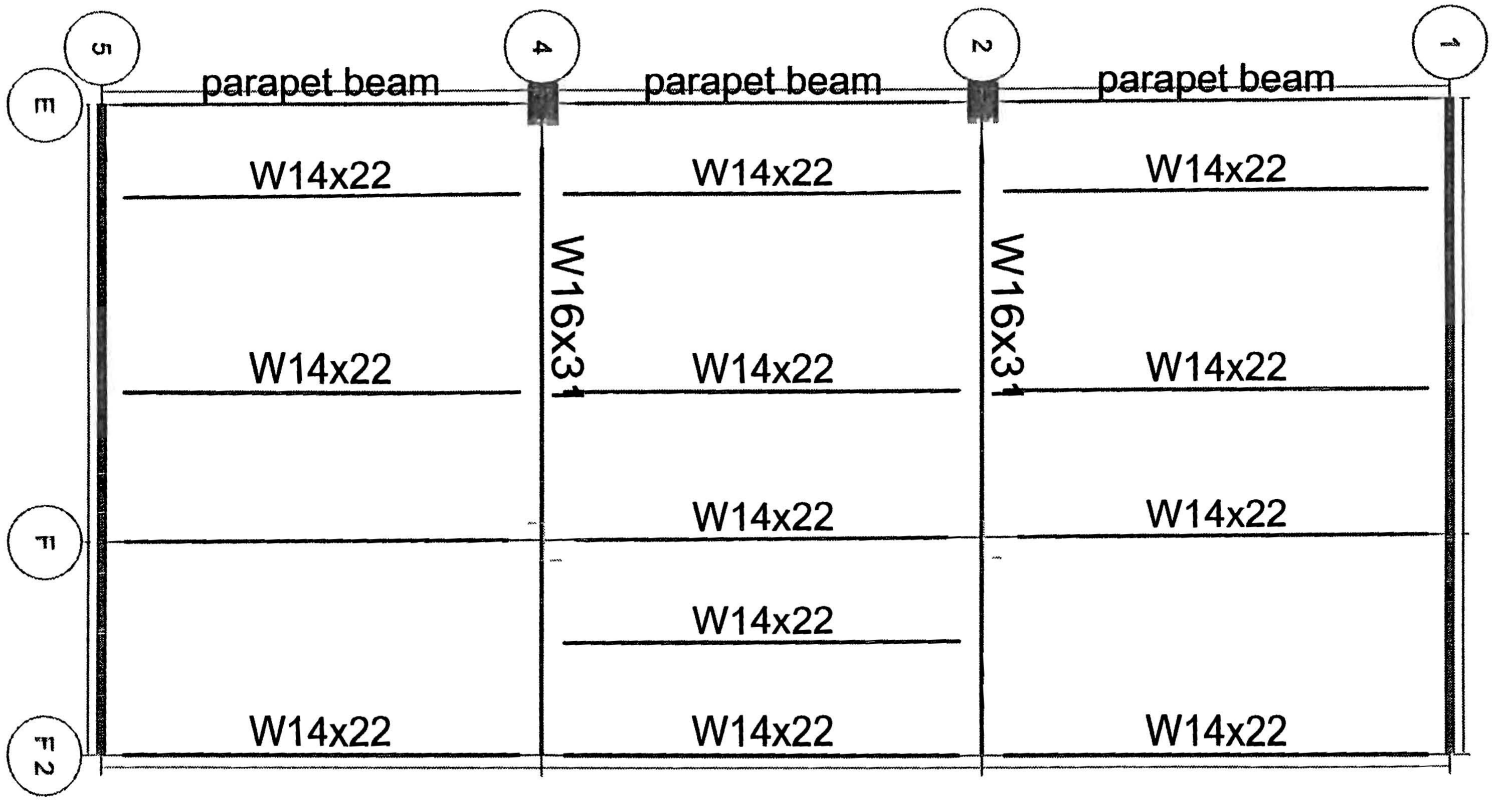

...ing under units before units 02/07/08 15 19 54 6302

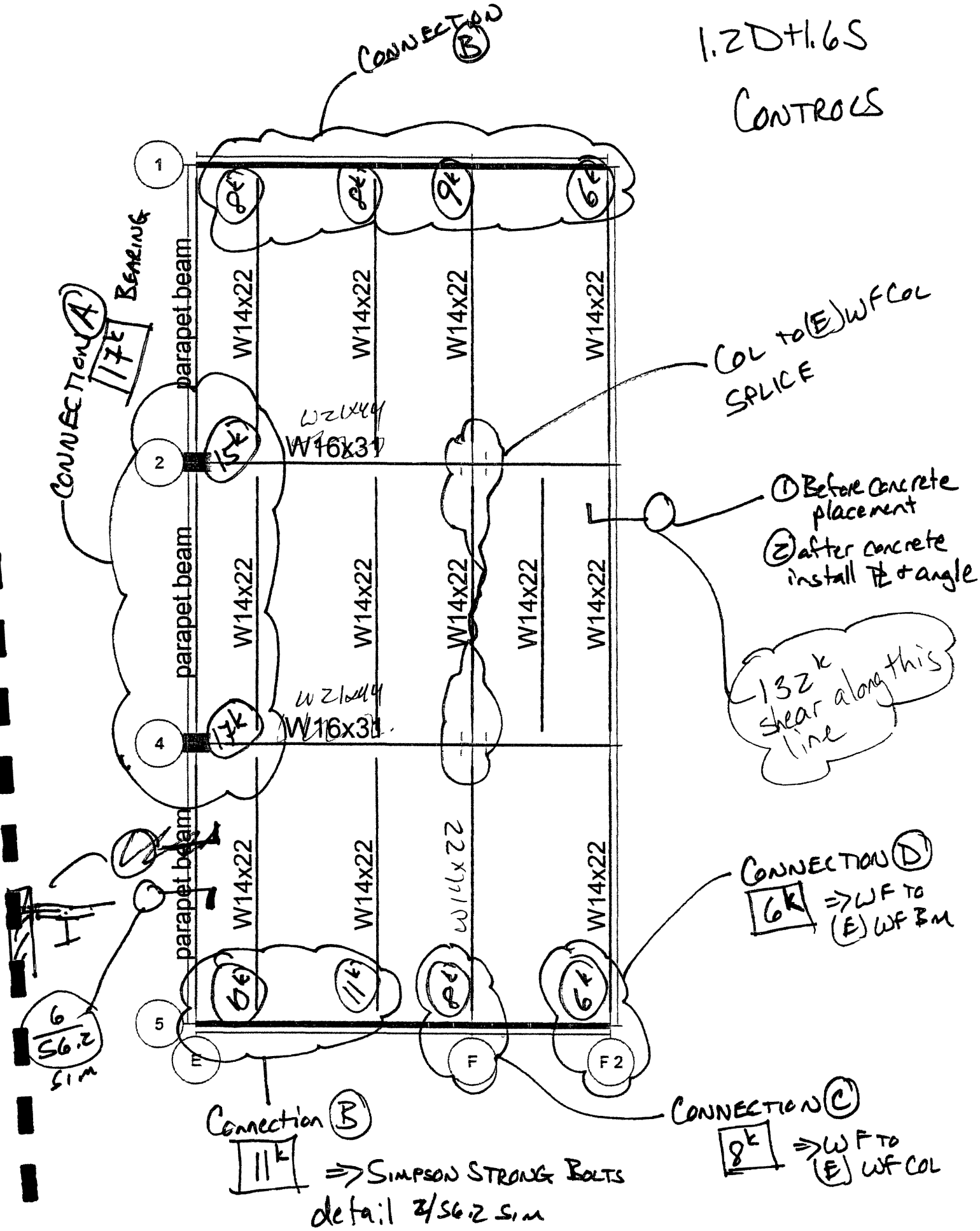
1.2D+1.6S
CONTROLS
CONNECTION (B)
CONNECTION (A)
BEARING
17k
parapet beam
W14x22
W16x31
W21x44
15k
17k
COL to (E) WF COL
SPLICE
(1) Before concrete placement
(2) after concrete install PL + angle
132k shear along this line
CONNECTION (D)
6k
=> WF TO (E) WF BM
6
S6.2
SIM
Connection (B)
11k
=> SIMPSON STRONG BOLTS
detail 2/S6.2 SIM
CONNECTION (C)
8k
=> WF TO (E) WF COL
1
2
4
5
E
F
F2

LOAD COMBINATIONS

1 40DL + 0 00LL
1.20DL + 1 60LL

STEEL BEAM REACTION SUMMARY:

Floor Type: Roof

Beam No.	Beam Size	Supports X	(ft) Y	— Unfactored(kips) — DL	+LL	-LL	— Factored (kips) — +TOTAL	-TOTAL
3	W16X31	0 00	17 17	8 8	3 9	-1 0	16 8	0 0
		17 04	17 17	23 0	6 3	0 0	37 7	0 0
5	W16X31	0 00	34 33	6 5	4 1	-1 0	14 3	0 0
		17 04	34 33	21 5	6 5	0 0	36 3	0 0
6	W14X22	3 75	0 00	5 4	1 9	0 0	9 5	0 0
		3 75	17 17	5 4	1 9	0 0	9 4	0 0
7	W14X22	3 75	17 17	5 4	1 9	0 0	9 4	0 0
		3 75	34 33	5 4	1 9	0 0	9 4	0 0
8	W14X22	3 75	34 33	3 4	2 0	0 0	7 3	0 0
		3 75	52 58	3 4	2 0	0 0	7 3	0 0
9	W14X22	11 25	0 00	5 9	1 8	0 0	10 1	0 0
		11 25	17 17	5 9	1 5	0 0	9 6	0 0
10	W14X22	11 25	17 17	5 9	1 5	0 0	9 5	0 0
		11 25	34 33	5 9	1 5	0 0	9 5	0 0
11	W14X22	11 25	34 33	4 0	1 6	0 0	7 4	0 0
		11 25	52 58	4 0	1 9	0 0	7 9	0 0
12	W10X12	17 04	0 00	4 1	2 0	0 0	8 0	0 0
		17 04	17 17	4 1	1 6	0 0	7 4	0 0
13	W14X22	17 04	17 17	2 8	1 1	0 0	5 1	0 0
		17 04	34 33	2 8	1 1	0 0	5 1	0 0
14	W14X22	17 04	34 33	4 3	1 7	0 0	7 9	0 0
		17 04	52 58	4 3	2 1	0 0	8 5	0 0
15	W14X22	21 23	17 17	3 7	0 9	0 0	5 9	0 0
		21 23	34 33	3 7	0 9	0 0	5 9	0 0

Reaction Summary

RAM Steel v11 0
DataBase roof framing under units
Building Code IBC

02/07/08 16 29 53
Steel Code AISC LRFD

No.	Size	X	Y	DL	+LL	-LL	+TOTAL	-TOTAL
16	W14X22	25 46	0 00	2 7	1 3	0 0	5 3	0 0
		25 46	17 17	2 7	1 0	0 0	4 9	0 0
17	W14X22	25 46	17 17	2 8	0 6	0 0	4 2	0 0
		25 46	34 33	2 8	0 6	0 0	4 2	0 0
18	W14X22	25 46	34 33	2 9	1 1	0 0	5 2	0 0
		25 46	52 58	2 9	1 3	0 0	5 6	0 0

Subject.	Job Number	Date
Job	By	Section
	Checked By	Page of

transfer 132^k over 52'

$$\frac{132}{52} = 2.54 \text{ k/f}$$

what size ℄?

$$0.6 F_y A_v \times 0.75 = 2.54 k$$

36"

$A_v > 0.15$

$L = 12''$

$t > 0.013''$

//any size ok

THRU BOLT IN 2½" c.c.

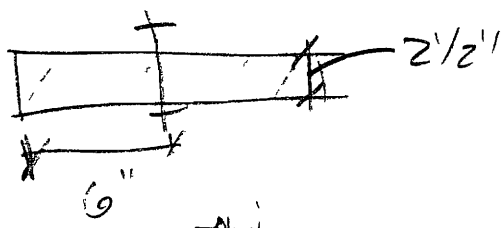

D6.1 $V_{sa} = n A_{se} f_{uta}$ 50ksi any bolt ok use ¾"

D6.2

Subject:	Job Number:	Date
Job	By	Section
	Checked By	Page of

D6.2

$$V_{cb} = \frac{A_{vc}}{A_{vco}} \psi_{c,V}^{1.0} \psi_{c,V}^{1.0} V_b \times 2$$

spacing between anchors

$A_{vc} = 2.5'' \times 6'' = 15 in^2$

$A_{vco} = 4.5(12)^2 = 648 in^2$

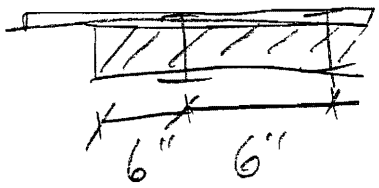

$V_b = 7\left(\frac{l_e}{d_o}\right)^{0.1} \sqrt{d_o} \sqrt{f'_c} (c_{a1})^{1.5}$

$c_{a1} = 6''$

$f'_c = 1200$

$d_o = 3/4''$

$l_e = 2.5$

$V_b = 3.93^k$

$V_{cb} = 2.18$

$\phi 0.75 V_{cb} = 1.23$

N.G => grout solid to not have this failure.

Degenkolb

Subject.	Job Number	Date	
Job	By	Section	
	Checked By	Page	of

CONNECTION (B) 11k

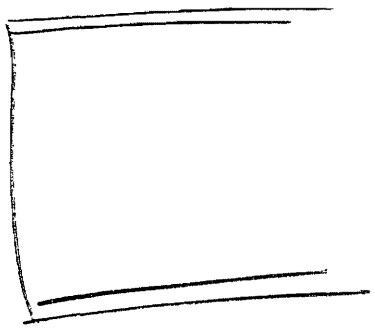

USE 2/S6.2 // OK for 20k ⇒ OK for 11k

Section E: Miscellaneous Calculations

Degenkolb

Subject: SKYLIGHT FRAMING	Job Number	Date	
Job	By JBE	Section	
	Checked By	Page	of

SKYLIGHTS

ROOF LOADING

DL
LL
SL

DL

2" CONC OVER 8"x5½" DEEP JOIST

$\frac{2}{12} \times 150 = 25$ psf

$\frac{\frac{8''}{12} \times \frac{5\frac{1}{2}''}{12} \times 150}{2.1' \text{ o.c.}} = 22$ psf

ROOFING = 5 psf

TOTAL DL ON JOISTS = 52 psf

LL

20 psf

TOTAL LL ON ROOF = 20 psf

Degenkolb

Subject: Skylight		Job Number	Date
Job		By JBE	Section
		Checked By	Page 2 of

SL

$p_f = 0.7 C_e C_t I p_g$

$p_g = 25$ psf, $C_e = 0.9$, $C_t = 1.0$, $I = 1.2$

$\Rightarrow S = 0.7(0.9)(1.2)(25) = 19$ psf < 25 psf

$\Rightarrow \underline{\underline{S = 25 \text{ psf}}}$

Drift

$\gamma = 0.13(25) + 14 = 17.25$ pcf

$h_b = \frac{25}{17.25} = 1.45'$

Leeward: $l_u = 90' < 25' \rightarrow$ use $25'$

$h_d = 0.43(90)^{1/3}(25)^{1/4} - 1.5 = 3.19'$

Windward: $l_u = 88$

$h_d = \frac{3}{4}[0.43(88)^{1/3}(35)^{1/4} - 1.5] = 1.99'$

$h_d < h_c$ (6.3) $\Rightarrow w = 4h_d = 12.76'$

$p_d = h_d \gamma = 3.19(17.25) = 55$ psf

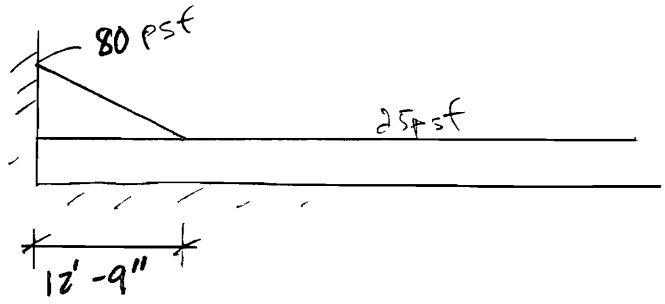

SKYLIGHT (A)

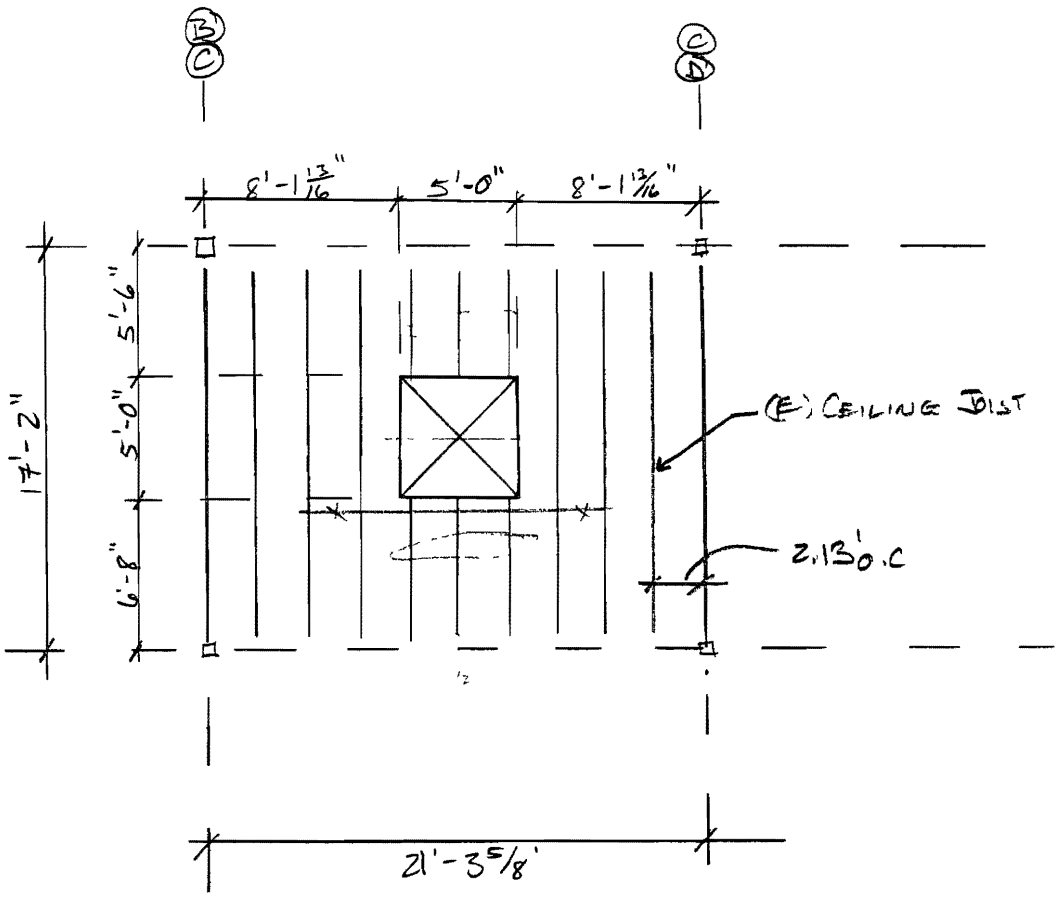

DL = 52 psf
LL_r = 20 psf
SL = 25 psf

1.4D = 72.8 psf
~~1.2D + 0.5S~~
1.2D + 1.6S = 102.4 psf

CAPACITY OF (1)(E) JOIST

RJ4 =>

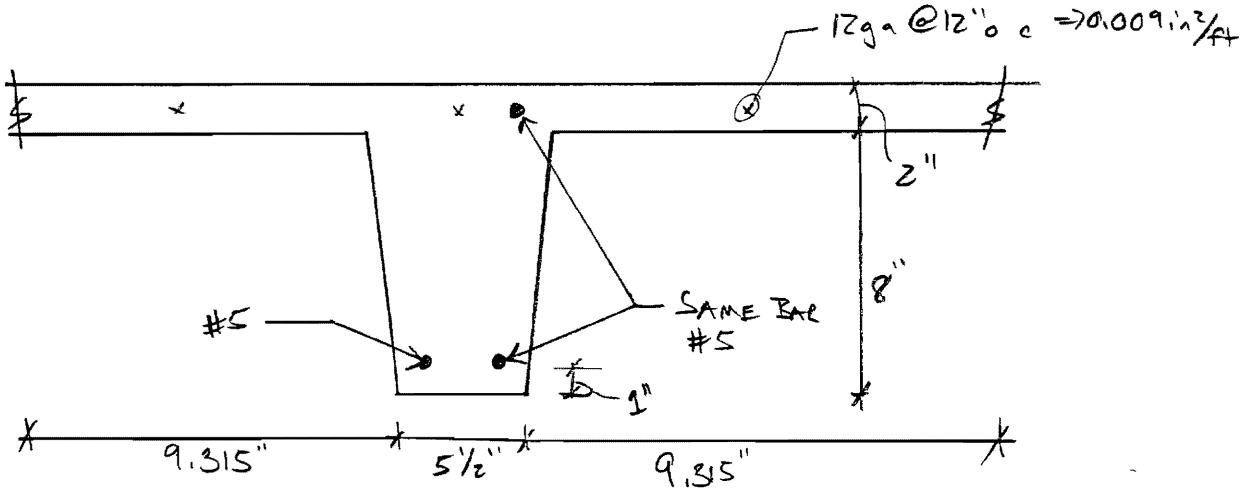

$f'_c = 1200$ psi
$f_y = 50$ ksi } LOWER BOUND FROM MAT. TESTING

$\boxed{M_n^+}$

$b_{eff} = \frac{17'}{4} = 4.25' > 24.13''$

$= 8t = 24'' > 9.315''$

$= 9.315''$

$a = \frac{A_s f_y}{0.85 f'_c b}$ $\quad A_s = 2(0.31) = 0.62 \text{ in}^2$, $b = 24.13''$

$a = 1.26 < 2''$ // OK $\quad d = 10 - 1 - \frac{1}{2} = 8.5''$

$\phi M_n^+ = 0.9 A_s f_y (d - \frac{a}{2}) = 0.9(0.62)(50)(8.5 - \frac{1.26}{2}) = 220^{k''}$

$\boxed{\phi M_n^+ = 18.3^{k'}}$

$\boxed{M_n^-}$

$b_{eff} = 24.13''$ ← from M_n^+

$b_{eff} = \frac{17'2''}{10} = 20.6''$ ← From D6 6 ← CONTROLS

$a = \frac{A_s f_y}{0.85 f'_c b}$ $\quad A_s = 0.31 + 0.009\left(\frac{20.6}{12}\right) = 0.325 \text{ in}^2$

$b = 5.5''$

$a = 2.9''$ $\quad d = 10 - 1 - \frac{1}{2} = 8.5''$

$\phi M_n^- = 0.9 A_s f_y (d - a/2) = 0.9(0.325)(50)(8.5 - \frac{2.9}{2})$
$= 103 k''$

$\phi M_n^- = 8.6 k'$

DEVELOP TOP BAR FOR NEG MOMENT? HOLE DIM OF TOP BAR = 25 2'
℄ TO ℄ DIM OF SPAN = 17'2''
$\Delta = 8'$ ⇒ 4' EA SIDE.

$l_d = \left(\frac{f_y \psi_t \psi_e \lambda}{25\sqrt{f'_c}}\right) d_b = \left(\frac{50}{25\sqrt{1200}}\right) 0.625 = 36'' < 48''$ // OK
BARS CAN BE DEVELOPED

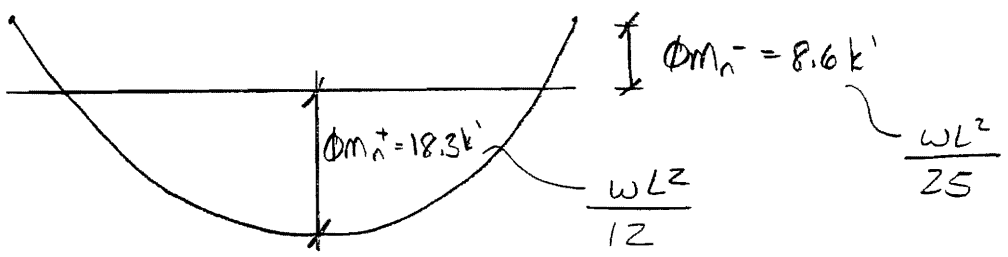

TOTAL STATIC MOMENT $= \frac{w_u l^2}{8}$

$l_n = 17'2'' - 14'' = 16'$

$\frac{w_u (16')^2}{8} \le \phi M_n^+ + \phi M_n^- = 18.3 + 8.6 = 26.9 k'$

$w_u \le 0.84 klf$ ⇒ 394 psf vs 102 psf ⇒
prob OK TO TAKE LDS.

6/

0315

RISA MODEL W/ SPRINGS ON EA. END
TO SIMULATE M_n^+ + M_n^- CAPACITIES REACHED
SIMULTANEOUSLY

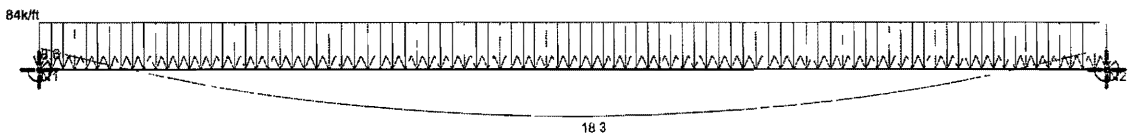

Loads BLC 1 all
Results for LC 1 all
Member Bending Moments (k ft)

Degenkolb Engineers		January 28, 2008
Degenkolb Engineers		10 21 AM
		joist boundary conditions r2d

Subject: Skylight		Job Number	Date
Job		By JBE	Section
		Checked By	Page 7 of

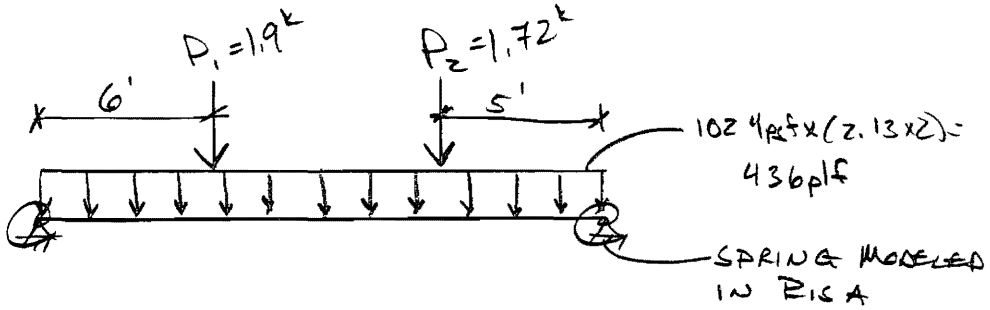

P_1 & P_2 FROM RE-DIRECTING LOAD FROM 3 JOISTS

$P_1 = 1.5(2.13) \times \left(\frac{6.67}{2} + 2.5\right) \times 102.4\,psf = 1.9^k$

$P_2 = 1.5(2.13) \times \left(\frac{5.5}{2} + 2.5\right) \times 102.4\,psf = 1.72^k$

$M_u^+ = 16.4^{k'} < 18.3\ k'$ // OK FOR EVEN 1 JOIST

$M_u^- = 7.6\ k' < 8.6\ k'$ // OK FOR EVEN 1 JOIST

SEE RISA RESULTS ATTACHED

8/

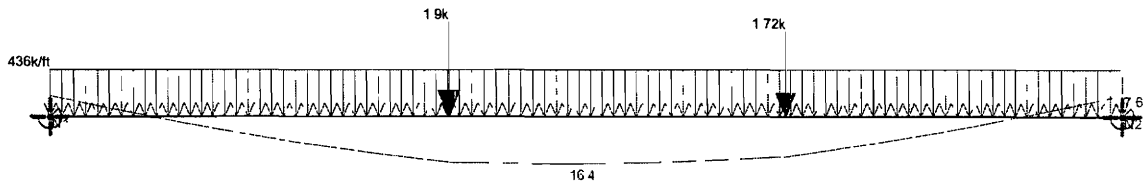

Loads BLC 1 all
Results for LC 1 all
Member Bending Moments (k ft)

Degenkolb Engineers		January 28, 2008
Degenkolb Engineers		10 29 AM
		joist A r2d

SKYLIGHT (B)

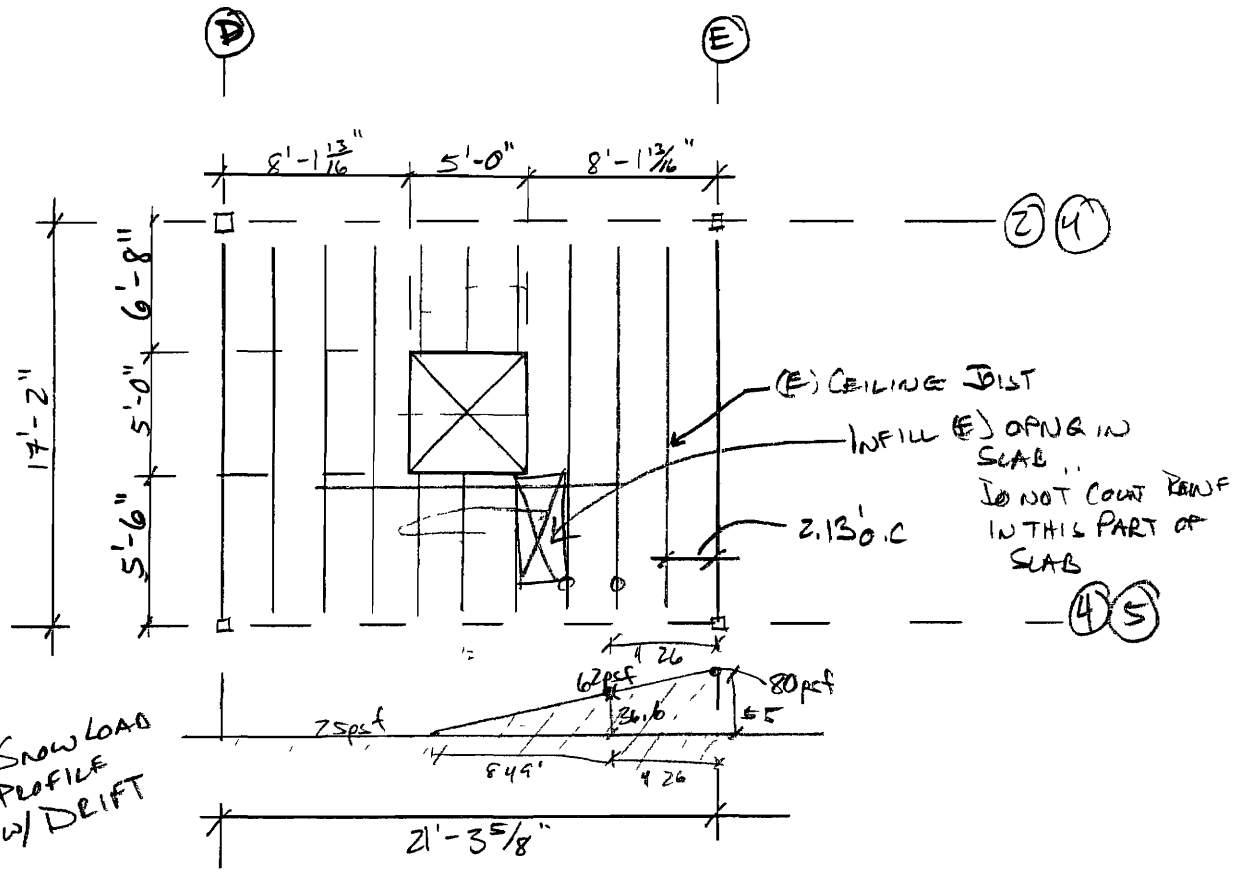

SNOW LOAD PROFILE w/ DRIFT

DL = 52psf
LL_r = 20psf
SL = 62psf on RT

1.4D = 72.8psf

~~1.2D + 0.5S~~

1.2D + 1.6S = **162psf**

CAPACITY OF (E) JOIST

RJ4 ⇒ SAME AS SKYLIGHT (A)

$$\boxed{\phi M_n^+ = 18.3k'}$$

ϕM_n^- ⇒ RE-CALCULATE BASED ON LESS A_s B/C OF (E) OPNG

$b_{eff} = \frac{20.6''}{2} = 10.6''$

$a = \frac{A_s f_y}{0.85 f'_c b}$

$a = 2.83''$

$A_s = 0.31 + 0.009\left(\frac{10.6}{12}\right) = 0.318''^2$
$b = 5.5''$
$d = 8.5''$
$f_y = 50ksi$
$f'_c = 1200psi$

$\phi M_n^- = 0.9 A_s f_y (d - a/2) = 101.4k''$

$$\boxed{\phi M_n = 8.45k'}$$

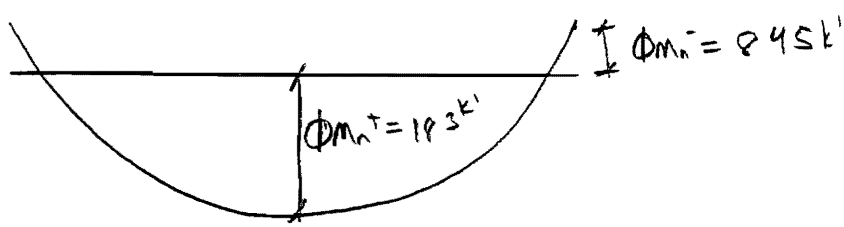

$\frac{w_u (16)^2}{8} \leq 18.3 + 8.45 = 26.75k'$

$w_u \leq 0.84 k/f$ ⇒ CLOSE TO SKYLIGHT (A) MODEL
∴ USE SAME MODEL

Degenkolb

Subject: Sk / l [illegible]		Job Number	Date
Job		By TJE	Section
		Checked By	Page 11 of

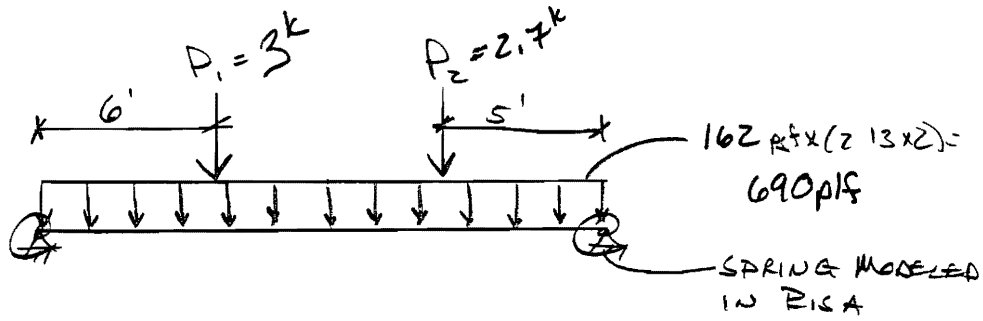

P_1 + P_2 FROM RE-DIRECTING LOS FROM 3 JOISTS

$P_1 = 1.5(2.13) \times \left(\frac{6.67}{2} + 2.5\right) \times 162 \text{ psf} = 3^k$

$P_2 = 1.5(2.13) \times \left(\frac{5.5}{2} + 2.5\right) \times 162 \text{ psf} = 2.7^k$

$M_u^+ = 26k' < 2 \cdot 18.3 = 36.6k'$ // OK FOR 2 JOISTS

$M_u^- = 12k' < 8.6 \times 2 = 17.2k'$ // OK FOR 2 JOISTS

SEE RISA RESULTS ATTACHED

12/

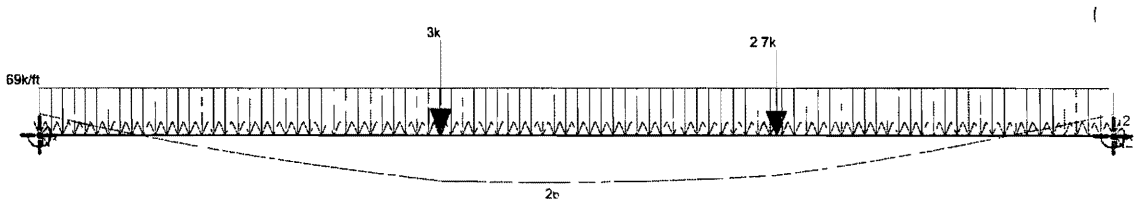

Loads BLC 1 all
Results for LC 1 all
Member Bending Moments (k ft)

Degenkolb Engineers		January 28, 2008
Degenkolb Engineers		11 17 AM
		joist B r2d

Degenkolb

Subject: Skylight		Job Number	Date
Job		By JBE	Section
		Checked By	Page 13 of

SKYLIGHT (C)

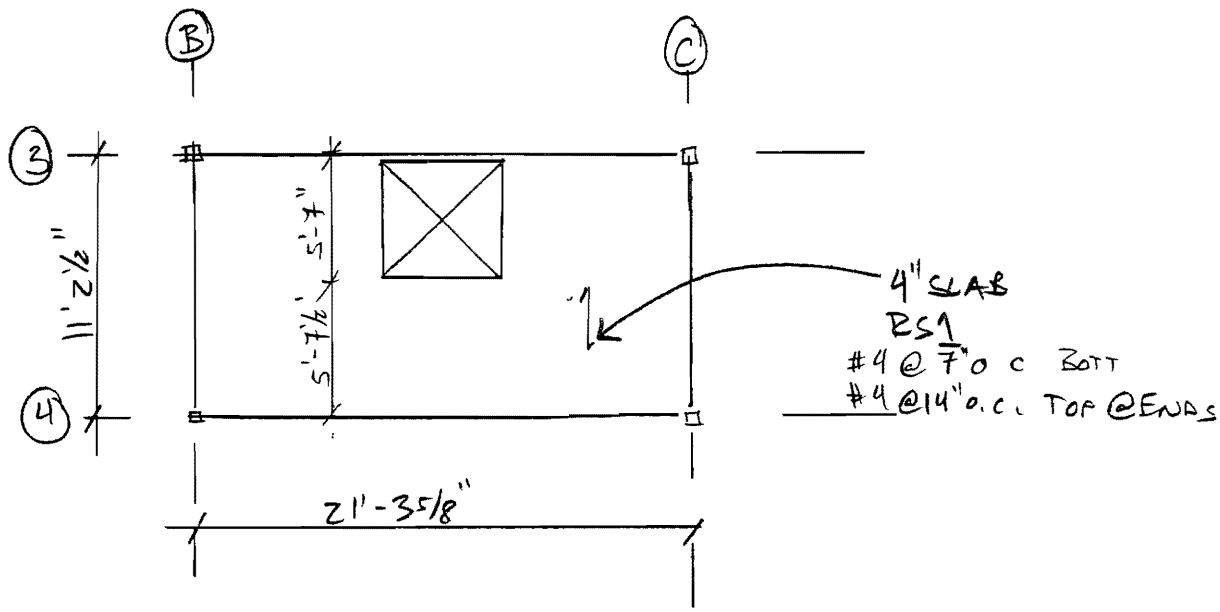

LOAD ⇒ $\frac{4''}{12} \times 150\,pcf = 50\,psf$

ROOFING = 5 psf

$\boxed{DL = 55\,psf}$

$\boxed{SL = 25\,psf}$

$1.2D + 1.6S = \underline{106\,psf}$

CAPACITY OF (E) SLAB

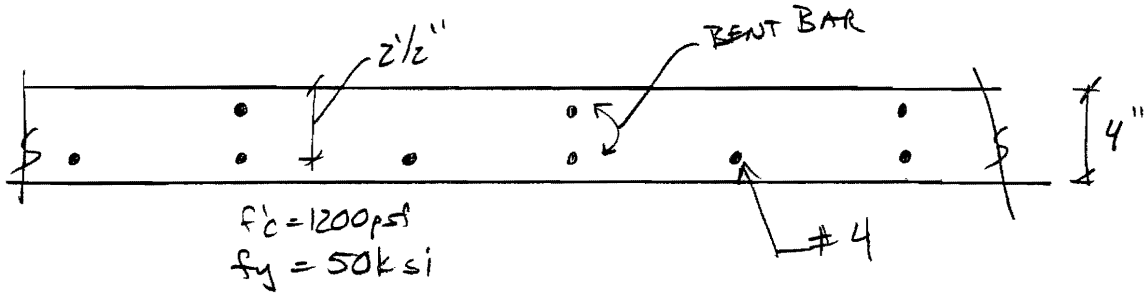

ϕM_n^+

$a = \frac{A_s f_y}{0.85 f'_c b}$

$a = 1.4''$

$A_s = 0.2 \times \frac{12}{7} = 0.343 \text{ in}^2$

$b = 12''$

$d = 2.5''$

$\phi M_n^+ = 0.9(A_s)(f_y)(d - a/2) = 27 \text{ k}''$

$\phi M_n^+ = 2.3 \text{ k}'$

ϕM_n^-

$a = \frac{A_s f_y}{0.85 f'_c b}$

$a = 0.69''$

$A_s = 0.2 \times \frac{12}{14} = 0.17 \text{ in}^2$

$b = 12''$

$d = 2.5''$

$\phi M_n^- = 0.9 A_s f_y (d - a/2) = 16.5 \text{ k}''$

$\phi M_n^- = 1.4 \text{ k}'$

$l_{dh} = \frac{0.2 F_y}{\sqrt{f'_c}} d_b = 18''$

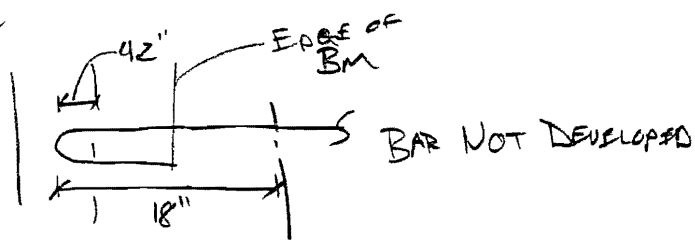

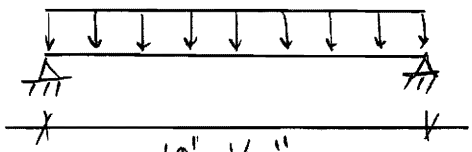

$10'-1/2''$
$= 10.04'$

$$\phi M_n^+ = 2.3k' \geq \frac{w_u \ell^2}{8}$$

$$w_u \leq 183 \text{ plf}$$

LOOK @ ADD'L LOADING FROM SKYLIGHT

$$P = \left(\frac{5.04'}{2} + \frac{5}{2}\right) \times \left(\frac{5}{2}\right) \times 106 = 1.33^k$$

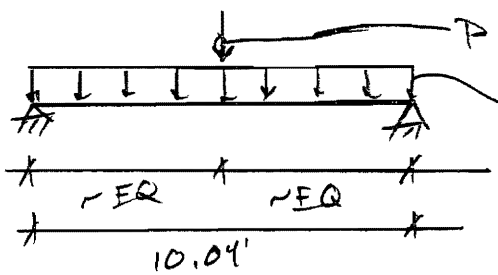

TRY 4' TRIB WIDTH
$w_u = 4(106 psf) = 424 plf$

$$M_u = \frac{PL}{4} + \frac{w_u L^2}{8} = \frac{1.33(10)}{4} + \frac{0.424(10)^2}{8} = 8.625 k'$$

$$\phi M_n = 4' \times 2.3k' = 9.2^k$$

DCR = 0.94 // OK

* ENGAGE AT LEAST 4' TRIB WIDTH OF SLAB FOR (E) SLAB TO WORK

Degenkolb

Subject. Skylight		Job Number	Date
Job		By JBE	Section
		Checked By	Page 16 of

OK TO CUT TO FACE OF (E) BM?

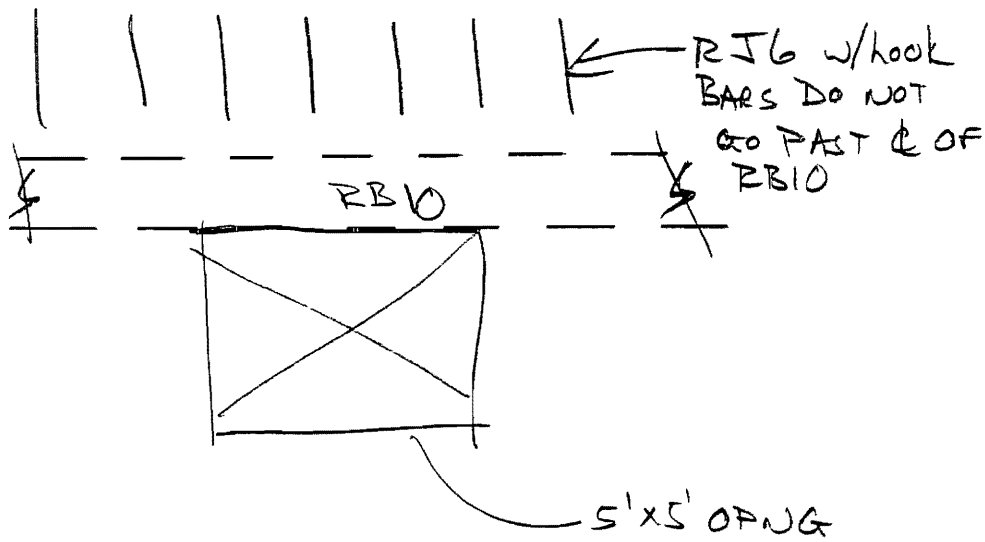

DESIGN (2) SCHEMES

1) FOR SKYLIGHTS (A) & (B)
2) FOR SKYLIGHT (C)

SCHEME (1)

$P_{max} = 3^k$ FROM SKYLIGHT (B)

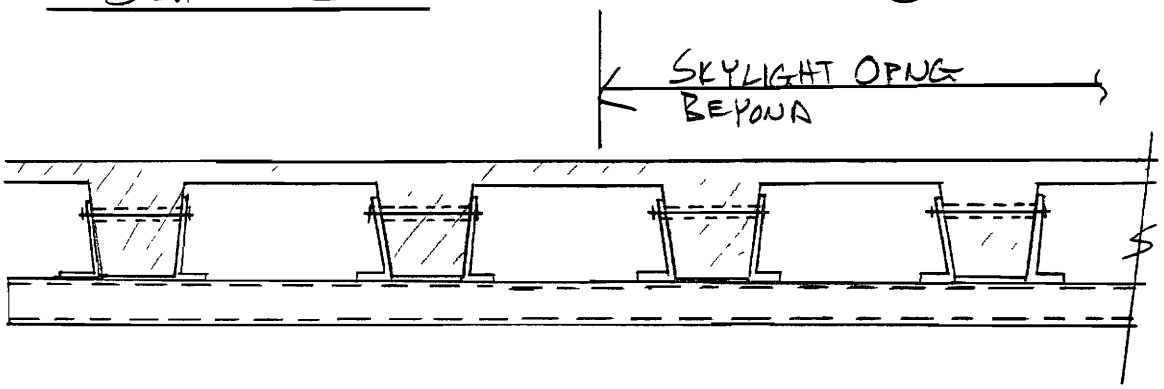

DESIGN CONNECTION FOR 3^k

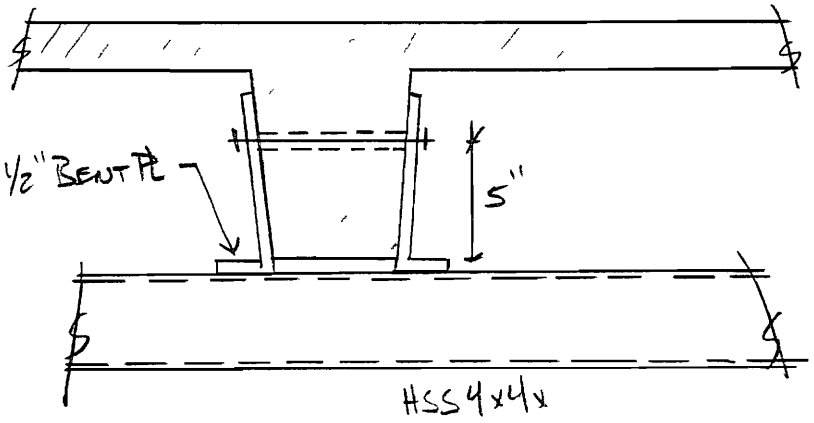

APPENDIX D FOR THRU BOLTS ½"Ø

D6.1

$V_{sa} = n A_{se} f_{uta}$ $A_{se} = 0.196$, $f_{uta} = 58\,ksi$, $n = 2$

$V_{sa} = 22.7^k$

$0.75\,\phi\,V_{sa} = 10.2^k > 3^k$ // OK ($\phi = 0.6$)

D6.2 CONCRETE BREAKOUT

$V_{cbg} = \frac{A_{Vc}}{A_{Vco}} \psi_{c,V} \psi_{ed,V} \psi_{h,V} V_b$ ($\psi_{c,V} = 1.0$, $\psi_{ed,V} = 1.0$, $\psi_{h,V} = 1.2$, $c_{a1} = 5'$)

$A_{Vc} = (3.5'' + 6'')(5.5'') = 115.5\,in^2$

$A_{Vco} = 4.5(5)^2 = 112.5\,in^2$

$V_b = 7\left(\frac{l_e}{d_o}\right)^{0.2} \sqrt{d_o}\,\sqrt{f'_c}\,(c_{a1})^{1.5}$

$= 7\left(\frac{5.5}{0.5}\right)^{0.2} \sqrt{0.5}\,\sqrt{1200}\,(5)^{1.5}$

$= 3.1^k$

$V_{cbg} = 3.82^k$

$0.75\,\phi\,V_{cbg} = 2.15^k < 3.0^k$ ($\phi = 0.75$) => LOOK AT ACTUAL LOAD TO ANCHOR GROUP

D6.3 CONCRETE PRYOUT STRENGTH

$V_{cpg} = k_{cp} N_{cbg}$

$k_{cp} = 2.0$

$N_{cbg} = \frac{A_{Nc}}{A_{Nco}} \cancel{\psi_{ec,N}}^{1.0} \cancel{\psi_{ed,N}}^{\phi_{tension}=1.0} \cancel{\psi_{c,N}}^{1.0} \cancel{\psi_{cp,N}}^{1.0} N_b$

$A_{Nc} = (3 \cdot 5.5 + 6)(5+5) = 225 in^2$

$A_{Nco} = 9(5.5)^2 \; 272 in^2$

$N_b = 17\sqrt{f'c}\, h_{ef}^{1.5} = 17\sqrt{1200}(5.5)^{1.5}$

$= 7.6^k$

$N_{cbg} = 6.3^k$

$V_{cpg} = 12.6^k$

$0.75 \underset{0.75}{\phi} V_{cpg} = 7.1^k > 3.0^k$ // OK

LOOK @ ACTUAL LOAD TO EA. JOIST

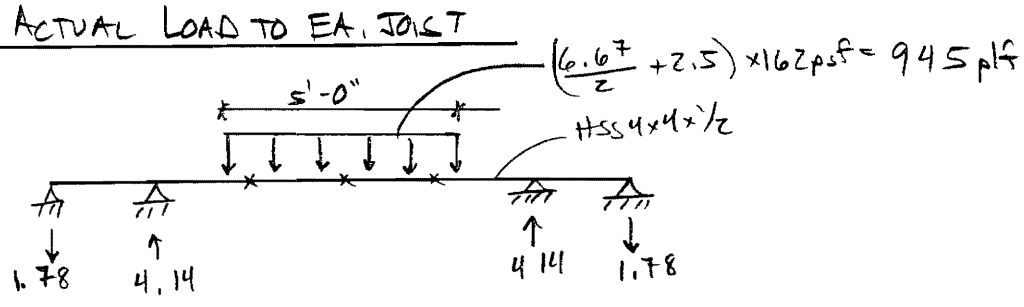

N/G => LOAD UP (2) JOISTS EQUALLY

Degenkolb

Subject: Skylight		Job Number	Date
Job		By JRE	Section
		Checked By	Page 20 of

HSS 4x4x1/2

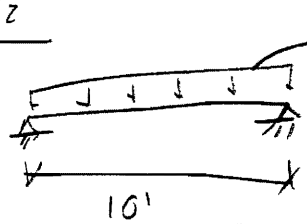

$M_u = \frac{wl^2}{8} = 11.8^{k'} = 142^{k''} < \phi F_y S$

46ksi

$S > 3.4 \text{ in}$

HSS 4x4x1/2 $S = 5.97$ //OK

CONN. FROM HSS TO HSS

LOADING really only over 5'

$\frac{5'}{2} \times 945 \text{ plf} = 2.36^k$

WELD HSS TO HSS w/ 1/4" weld

$1.4 \times 4 = 5.6^k/\text{in}$

weld 10" ea side

$DCR = \frac{2.36}{5.6 \times 10} = 0.04$ //OK

Subject	skylight	Job Number	Date
Job		By JBE	Section
		Checked By	Page 21 of

BENT PL LOADING

EA, PL

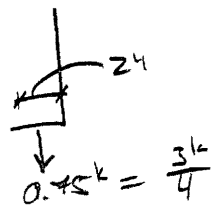

Weld to HSS

5/16 => 1.4 x 5 x 2" x 2 = 28k //OK

PL Bending

$M = 750^{\#} \times 1" = 0.75k" < 0.9 F_y S$ (36 ksi)

$S > 0.023$

$\frac{bd^2}{6} = \frac{6(0.5)^2}{6} = 0.25$ //OK

Degenkolb

Subject. Skylight		Job Number	Date
Job		By JBE	Section
		Checked By	Page 22 of

SCHEME (2) FOR SKYLIGHT (C)

*WE DECIDED TO GO AHEAD + FRAME AROUND THE (N) OPNG B/C WE DID NOT WANT TO RELY ON TRYING TO GET THE DIVERTED LOAD TO BE A TL LOAD FOR A 4'-0" TRIB SLAB TO SPACE

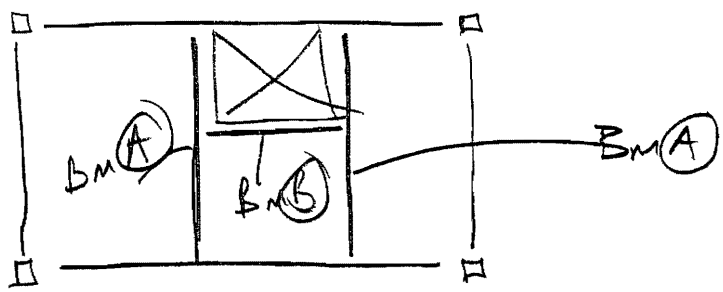

BM (A)

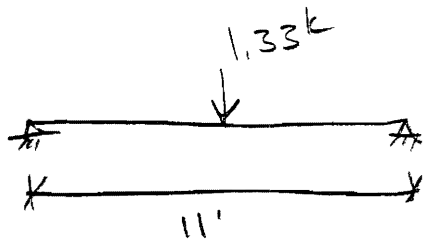

$M_u = \frac{PL}{4} = 3.66k' = 44k''$

$M_u < \phi F_y S$

50ksi WF
or 36ksi C

TRY WF BMS

W8x15 → $S > 1.0$

CHANNEL

C6x8.2 → $S > 1.35$

6332
5'-0" 7"
8'-1 13/16"
5'-6"
5'-0"
8'-1 13/16"
5'-6"
5'-0"
8'-1 13/16"
5'-0"
8'-1 13/16"
6'-8"

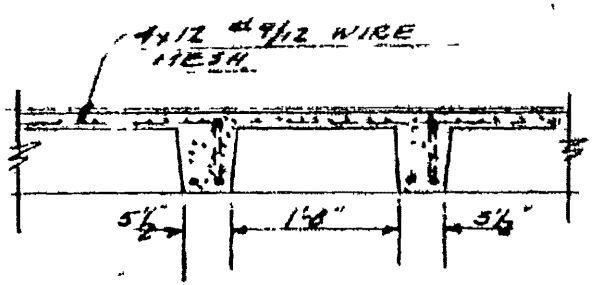

TYPICAL JOIST DETAIL

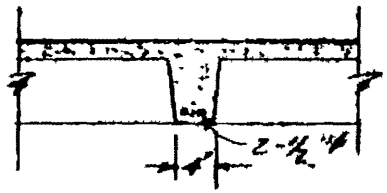

JOIST HEADER DETAIL

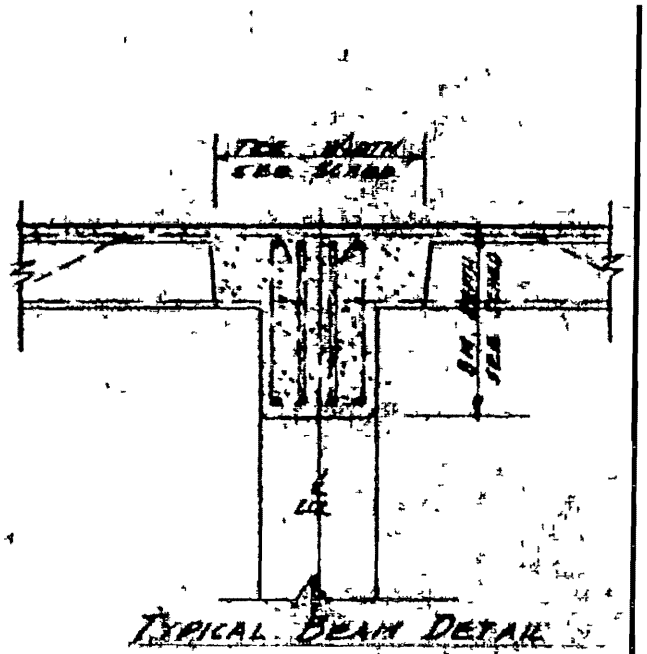

TYPICAL BEAM DETAIL

8" 1'-3" 13"

ROOF JOIST SCHEDULE

JOIST MARK	REINFORCING STEEL EACH JOIST											
	No	SIZE	LGTH	MK	HOOK	13"			13"		HOOK	d
RJ1	1	5/8φ	19-8	ST								
	1	5/8φ	24-8	531	7	1-6	1-3	13-7	1-3	6-6	—	7½
RJ2	1	5/8φ	19-8	ST								
	1	3/4φ	21-8	631	8	1-6	1-3	14-10	1-3	1-6	8	7½
RJ3	1	5/8φ	19-8	ST								
	1	3/4φ	24-9	632	8	1-6	1-3	13-7	1-3	6-6	—	7½
RJ4	1	5/8φ	17-0	ST								
	1	5/8φ	25-6	532	—	7-2	1-3	8-8	1-3	7-2	—	7½
RJ5	1	5/8φ	17-7	ST								
	1	3/4φ	22-7	633	—	6-6	1-3	11-5	1-3	1-6	8	7½
RJ6	1	5/8φ	23-4	ST								
	1	3/4φ	24-2	634	8	2-6	1-3	16-4	1-3	1-6	8	9½
RJ7	1	5/8φ	16-0	ST								
	1	5/8φ	21-5	533	—	6-0	1-3	10-10	1-3	1-6	7	7½

RJ# 12.6' vs. 8.58

4x12 #9/12 wire mesh

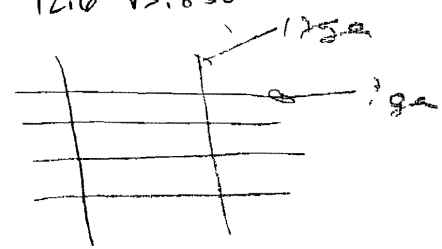

6334

MATERIAL PROPERTIES
WELDED WIRE FABRIC

Design Aid 11.2 9 Common stock styles of welded wire fabric

Style Designation		Steel Area sq in per ft		Approx Weight
Former Designation (By Steel Wire Gage)	Current Designation (By W-Number)	Longit	Trans	lb per 100 sq ft
6x6-10x10	6x6 W1 4xW1 4	029	029	21
4x12-8x12**	4x12-W2 1xW0 9	062	009	25
6x6-8x8	6x6-W2 1xW2 1	041	041	30
4x4 10x10	4x4 W1 4xW1 4	043	043	31
4x12-7x11**	4x12-W2 5xW1 1	074	011	31
6x6-6x6*	6x6-W2 9xW2 9	058	058	42
4x4-8x8	4x4 W2 1xW2 1	062	062	44
6x6-4x4*	6x6 W4 0xW4 0	080	080	58
4x4-6x6	4x4 W2 9xW2 9	087	087	62
6x6 2x2*	6x6 W5 5xW5 5***	110	110	80
4x4-4x4*	4x4 W4 0xW4 0	120	120	85
4x4-3x3*	4x4 W4 7xW4 7	141	141	102
4x4-2x2*	4x4 W5 5xW5 5***	165	165	119

* Commonly available in 8 ft x 12 ft or 8 ft x 15 ft sheets

** These items may be carried in sheets by various manufacturers in certain parts of the U S and Canada

*** Exact W Number size for 2 gage is 5 4

	d (in)	A
12	0.1046	.0096
9	0.1495	0.0176 in²

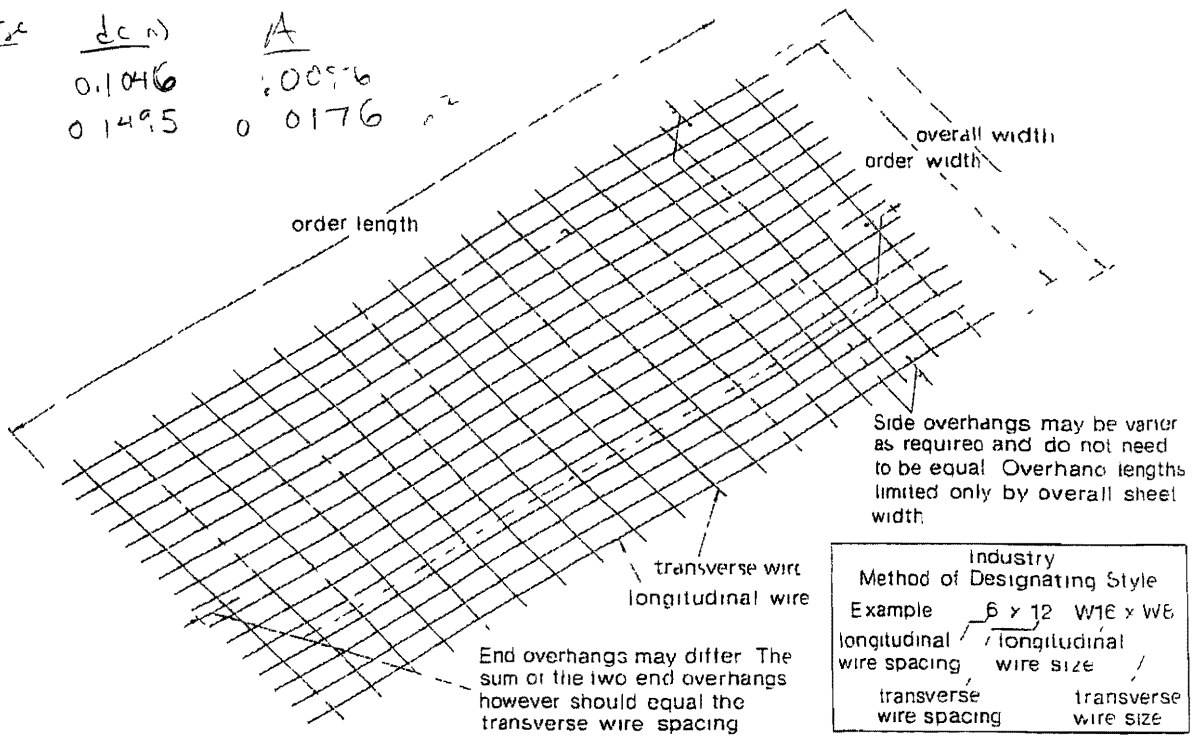

ROOF BEAM SCHEDULE

BEAM			REINFORCING STEEL EACH BEAM												STIRRUPS EACH END & SPACING FROM FACE OF SUPPORT
MK	SIZE	TOP	No	SIZE	LGTH	MK	Hook								
RB1	14/24	25	2	1"φ	21-4	ST			IN	BOT					2-3/8"φ 5'-1" AT 4-12-22
			2	1"φ	20-1	831	—	7-6	2-4	12-10	2-4	2-0	13	20	
			2	3/4"φ	23-6	ST			IN	TOP					
RB2	14/24	25	2	1"φ	21-4	ST			IN	BOT					2-3/8"φ 5'-1" AT 6-18
			2	1"φ	29-1	831	—	7-6	2-4	12-10	2-4	2-0	13	20	
			2	3/4"φ	32-6	ST			IN	TOP					
RB3	14/24	25	2	3/4"φ	21-2	ST			IN	BOT					2-3/8"φ 5'-1" AT 6-18
			2	7/8"φ	28-10	731	—	8-8	2-4	13-10	2-4	8-8	—	20	
			2	5/8"φ	25-4	ST			IN	TOP					
RB4	14/28	25	2	1"φ	24-6	ST			IN	BOT					3-3/8"φ 5'-4" AT 4-12-22
			2	1"φ	32-3	832	13	2-0	3-10	14-6	2-10	8-0	—	24	
			2	3/4"φ	25-6	ST			IN	TOP					
			2	7/8"φ	16-10	ST			IN	BOT					
RB5	14/25	19½	2	1"φ	21-4	833	13	1-6	4-8	6-10	4-8	1-6	13	40	—
RB6	14/25	—	1	27 7/8" φ	+ 2 PL 3/8 x 18 PL										1/2"φ 8'-11" 12" CTS EACH END
			2	3/4"φ	28-10	ST			IN	BOT					
RB7	14/25	—	1	27 7/8" φ	+ 2 PL 5/16 x 18 PL										NO
			2	3/4"φ	28-10	ST			IN	BOT					
RB8	12/14	14½	2	3/4"φ	9-4"	ST			IN	BOT					—
			—	—	—	—									
RB9	8/27	—	2	3/4"φ	17-2	ST			ST	IN	BOT				—
			2	5/8"φ	19-6	ST			ST	IN	TOP				
RB10	14/24	20	2	3/4"φ	21-4	ST									—
			2	7/8"φ	25-0	732	10	2-0	2-4	14-8	2-4	2-0	10	20	
			2	3/4"φ	12-10	ST			IN	BOT					
RB11	14/19	—	2	7/8"φ	15-6	733	10	1-6	1-8	7-6	1-8	1-6	10	19	3-1/2"φ 4'-6" AT 3-10-22
			2	5/8"φ	12-10	ST			IN	TOP					
RB12	14/18	—	2	3/4"φ	12-10	ST			IN	BOT					
			2	7/8"φ	15-6	733	10	1-6	1-8	7-6	1-8	1-6	10	18	1-1/2"φ 4'-5" AT 3-10-22
			2	5/8"φ	12-10	ST			IN	TOP					
RB13	19/12	—	2	3/4"φ	11-2	ST			IN	BOT					—
			—	—	—	—									
RB1	14/26	—	2	1"φ	23-10	ST			IN	BOT					2-7/8"φ 5'-5" AT 6-18
			2	1"φ	34-10	834	13	3-6	2-7	12-6	2-7	3-6	13	22	
			2	3/4"φ	26-10	ST			IN	TOP					
RB14	12/14	—	2	1"φ	22-3	ST			IN	BOT					5-1/2"φ 3'-7" AT 5-12-19 22-40
			2	1"φ	25-3	835	13	2-6	1-5	15-3	1-5	2-6	13	12	
			2	3/4"φ	22-3	ST			IN	TOP					

Degenkolb

Subject. Partition Support		Job Number A7437007	Date
Job Fire Station 1		By DAL	Section
		Checked By	Page of

BM supports for partitions

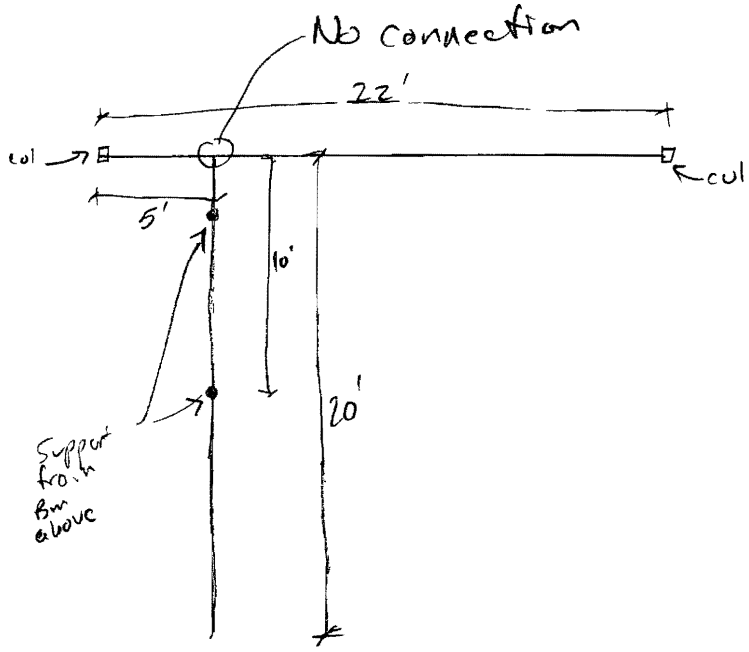

Weight on Bms

$w_u = 1.4(12'(7psf)) = 118plf + 60plf$ for Bm

$w_u = 188plf = 0.016\ k/in$

Degenkolb

Subject: Partition Support		Job Number A 7437001	Date
Job FS1		By DAC	Section
		Checked By	Page of

Consider 24' span Bm

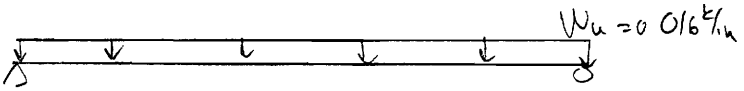

$\Delta_{max} = 1/4''$

$\Delta = \frac{5wl^4}{384EI}$ Solve for req'd I

E = 29000 ksi l = 264 in

$I_{req} \approx 140 \text{ in}^4$

Use HSS 8x8x5/8 $I = 146 \text{ in}^4$

$M_u = \frac{wl^2}{8} = 139 \text{ k in}$

$\phi M_n = 0.9(46)(44.7) = 1850^{k''}$

$b/t = 10.8 < 1.12\sqrt{\frac{29000}{46}} = 28$ ok

Degenkolb

Subject: Support for Indoor AHU	Job Number A7437007	Date 3/3/08	
Job Fire Station 1	By DAL	Section	
	Checked By	Page	of

Total Weight = 3020#

Weight equally distributed along 188" = 15'8"

$w = \frac{193\ plf}{2} = 96\ plf$ per side

Assume Worst location for unit

↳ tributary length of unit to each Bm = $15'8" - \frac{10'5'}{2} = 10'5'$

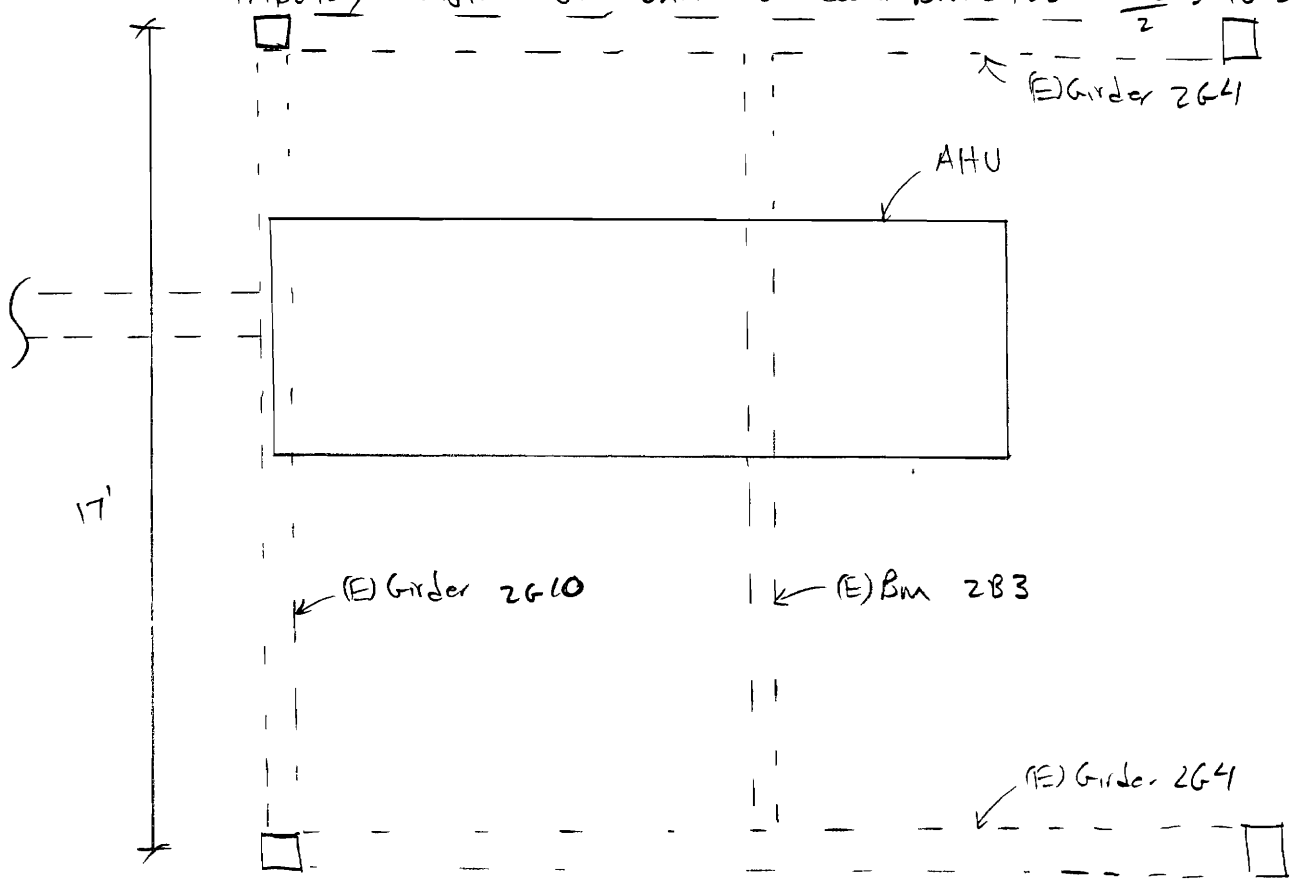

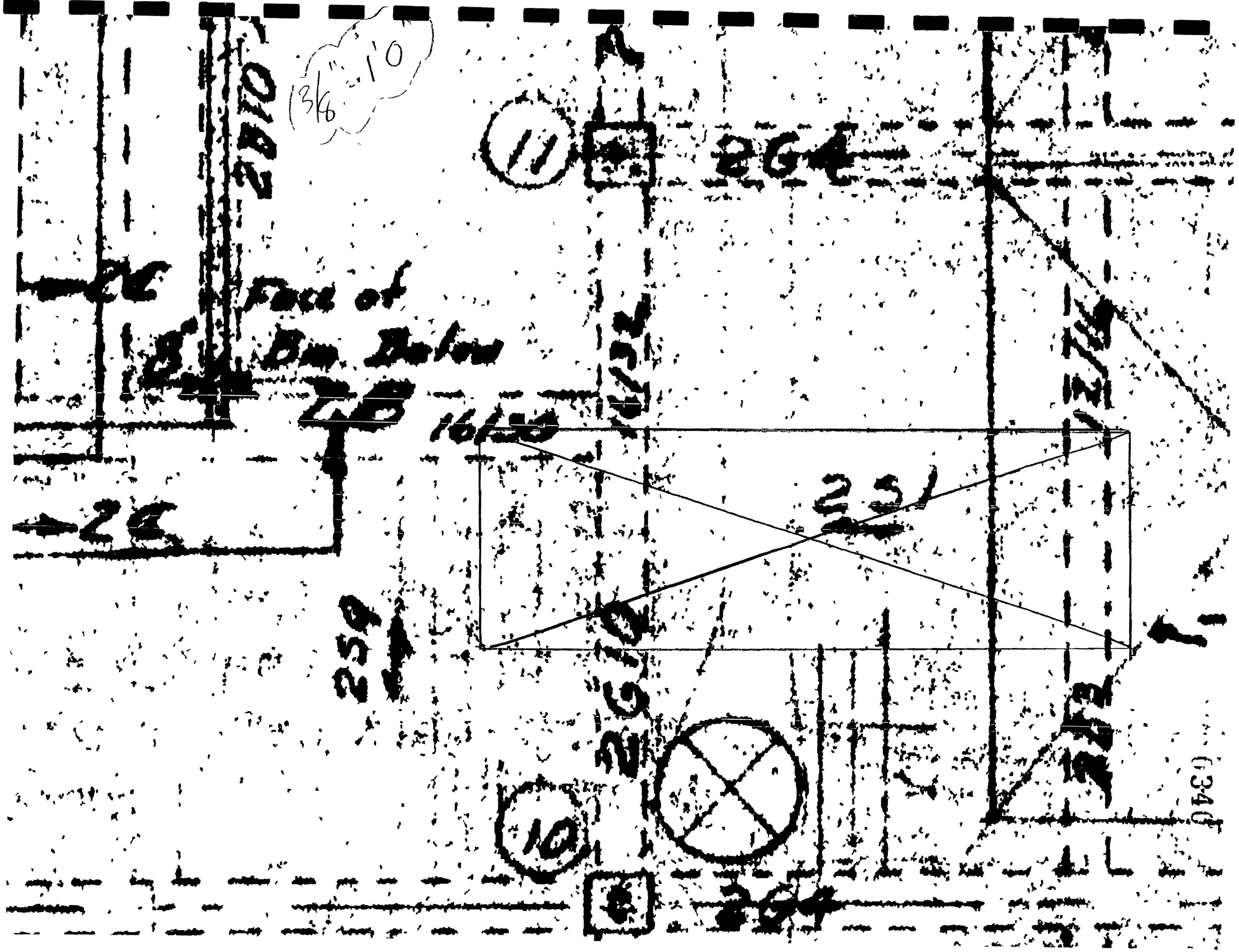

Face of
Bm. Below
11
264
231
259
10

Degenkolb

Subject: Support for Indoor AHU	Job Number A7437007	Date 3/3/08	
Job Fire Station 1	By DAL	Section	
	Checked By	Page	of

Check Shear in 2B3

DL from AHU

$P_u = (10.5')\left(\frac{193\,plf}{2}\right)(1.2) = 1215^{\#}$

LL

$w = (60psf)\left(\frac{21.25'}{2}\right)(1.6) = 1020\ plf$

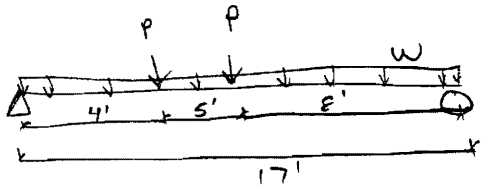

$V_u = \frac{(1020)(17')}{2} + 1215^{\#}\left(\frac{13}{17}\right) + 1215\left(\frac{8}{17}\right) = 10.2^k$ @ end

$V_u = 10.2^k - 1.02^k/ft\left(\frac{20}{12}\right) = 8.5^k$ @ last stirup

$\phi V_c = 2\sqrt{1200}(12)(14)(.075) = 8.7^k > 8.5^k$ @ last stirup ok

$\phi V_c + \phi V_s = 8.7^k + .075(.020 \times 2)(50)\left(\frac{14}{14}\right) = 23.7^k > 10.2^k$ ok

Degenkolb

Subject. INFILL (E) SLIDE-POLES		Job Number	Date
Job		By JBE	Section
		Checked By	Page / of

INFILL (E) SLAB @ SLIDE POLES 2ND FLOOR

SLAB TYPES TO INFILL

TYPE	t	BARS
2S1	4"	#4 STD @14" o.c. #4 BENT @14" o.c.
2S3	4"	#4 STD @16" o.c. #4 BENT @16" o.c.
2S4	4"	#4 STD @14" o.c. #4 BENT @14" o.c.
2S8	5"	

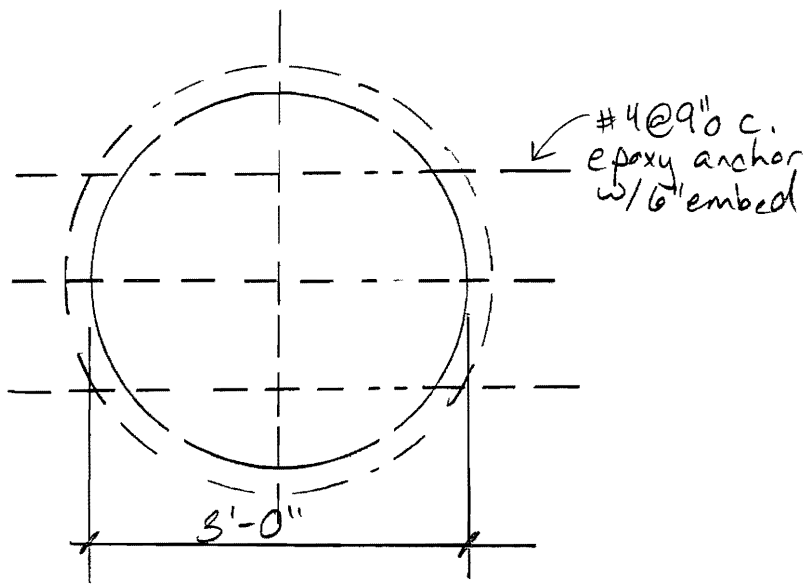

Degenkolb

Subject:		Job Number	Date
Job		By JBT	Section
		Checked By	Page 2 of

$1.2D + 1.6L = 1.2\left(\frac{4}{12}\right)(150) + 1.6(100)$
$= 220\,psf$

INFILL 3'-0" OPNG

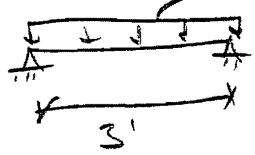

$9'' \times 220\,psf = 165\,plf$

$M_u = \frac{wL^2}{8} = 0.186\,k'$

$M_u = 2.23\,k''$

Assume $A_s f_y = 4^k$
$\Rightarrow$ ASD value for
#4 dowel w/6" embed

$f'_c = 4000$
$b = 9''$
$d = 2''$

$a = \frac{A_s f_y}{0.85 f'_c b} = 0.13''$

$\phi M_n = 0.9 A_s f_y (d - a/2) = 6.96\,k''$

DCR = 0.32 // OK

Degenkolb

Subject: PEDESTRIAN BRIDGE	Job Number	Date	
Job	By JBE	Section	
	Checked By	Page	of

PEDESTRIAN BRIDGE

LOADS

OVER MAIN AREA

$\boxed{LL = 100\ psf}$

DL=

Conc over Mtl Deck

$\frac{(3+\frac{3}{2})}{12} \times 150 = 56\ psf$

Mtl Deck = 3 psf

PRECAST PAVERS

~4" thick = 50 psf

assume 150pcf

1" mortar bed = 8.3 psf

~100 pcf

DL = 117 psf

USE $\boxed{120\ psf = DL}$

DL OF WALL

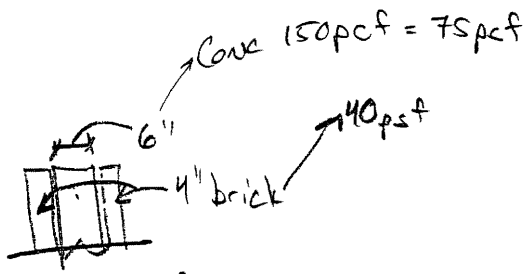

WALL WT = 75 + 2(40) = 155 psf

4' TALL = 620 plf

Degenkolb

Subject.		Job Number	Date
Job		By JBE	Section
		Checked By	Page 2 of

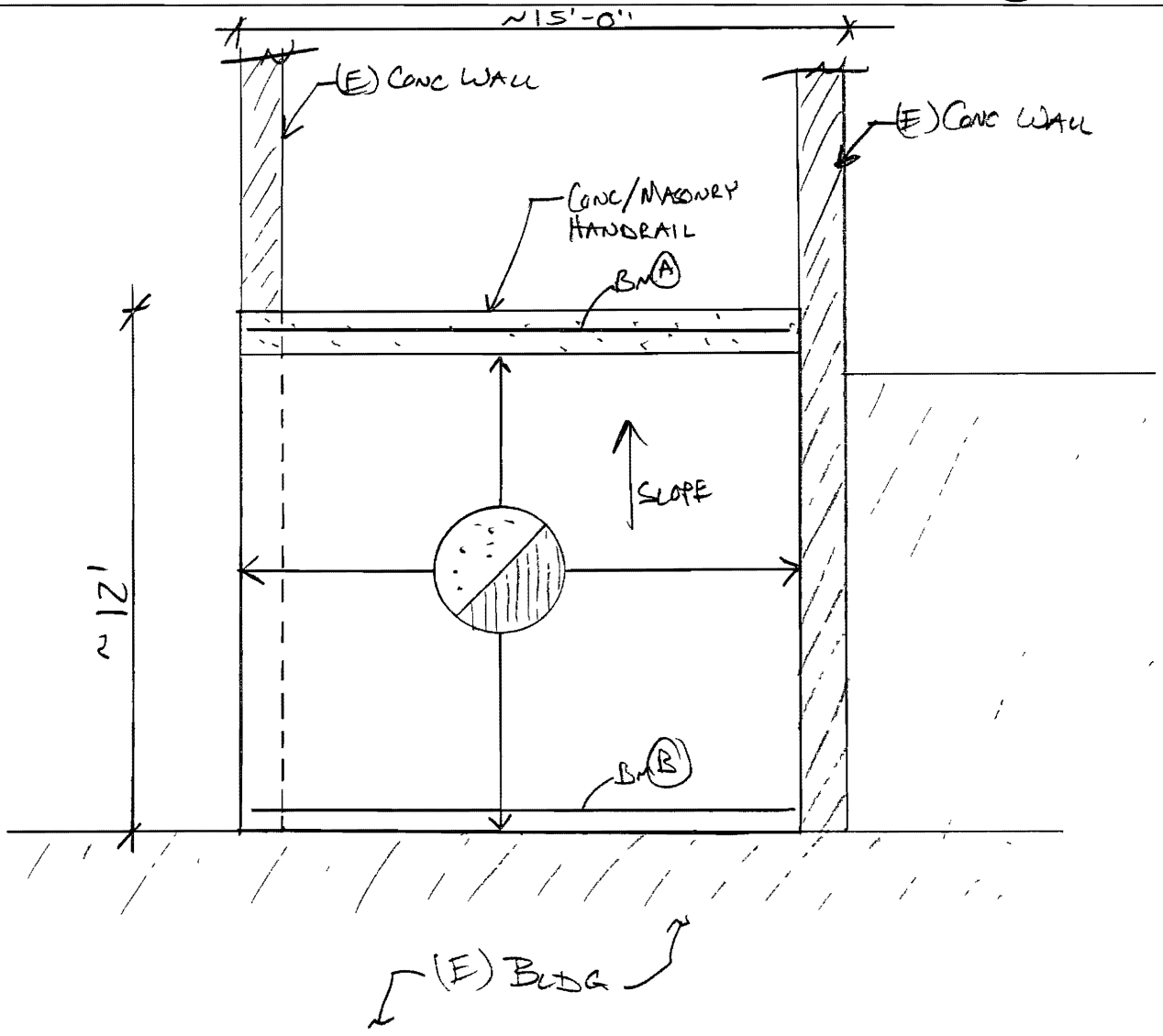

Degenkolb

Subject	Job Number	Date
Job	By JBE	Section
	Checked By	Page 3 of

DECK

SPAN = 12'

NO SHORING

120 + 100 = 220 psf

Const. superimposed load

1-SPAN

USE NWC

W/3 w/ 3" NWC FILL

16 GA

NO SHORING @ 12'

ALL LOAD = 232 psf > 220 psf // OK

Degenkolb

Subject.	Job Number	Date
Job	By JBE	Section
	Checked By	Page 4 of

BEAMS

BEAM A

$w_{wall} = 1.2(620) = 744$ plf
$= 1.4(620) = 868$ plf

$w_{deck} = [1.2(120) + 1.6(100)] \times 6' = 1824$ plf
$= 1.4(120)6' = 1008$ plf

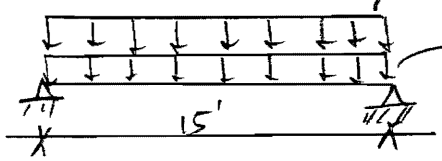

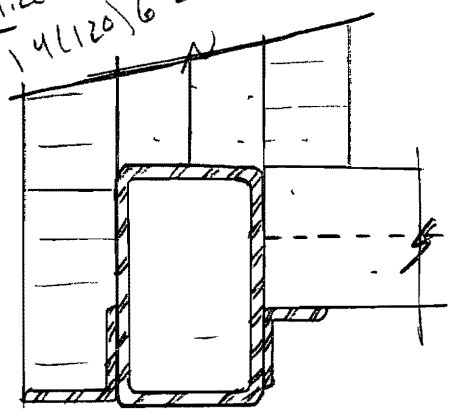

1.2D + 1.6L CONTROLS = 2568 plf

$M_u = \frac{wL^2}{8} = 72$ k' = 867 k''

USE HSS 10 x 8 x 5/8 w/ $\phi M_n = 215$ k'
DCR = 0.33

HSS 10 x 6 x 1/2 w/ $\phi M_n = 148$ k' ← OK
DCR = 0.49

Δ

DL ONLY ⇒ 620 + 120 x 6 = 1340 plf

$\Delta = \frac{5wl^4}{384EI}$ $w = 1.34$ klf $= 0.112$ k/in
$l = 15' \times 12 = 180''$
$E = 29000$ ksi
$I = 171$ in^4

$\Delta = 0.309 = \frac{L}{583} < \frac{L}{360}$ // OK $\frac{L}{360} = 1/2''$

DL+LL ⇒ 1340 + 100 x 6 = 1940

$\Delta = 0.45''$ // OK

Degenkolb

Subject:		Job Number	Date
Job		By JBE	Section
		Checked By	Page 5 of

BEAM B

from RM (A)

$w_{deck} = 1824$ plf

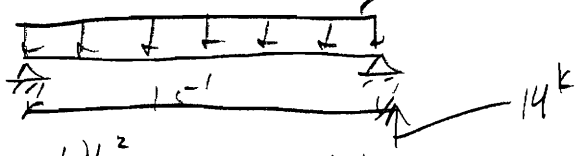

$M_u = \frac{wL^2}{8} = 51.3$ k'

TRY SHALLOWER SECTION

HSS 8 x 6 x 1/2 $\phi M_n = 105$

DCR = 0.49 // OK

Subject:		Job Number	Date
Job		By TBE	Section
		Checked By	Page 6 of

DESIGN CONNECTION @ NORTH END

LOAD BM (A) REACTION

$V_u = \frac{2.568^{k/ft} \times 15'}{2} = 19.26^k$ for HSS10

$V_u = 14^k$ for HSS8

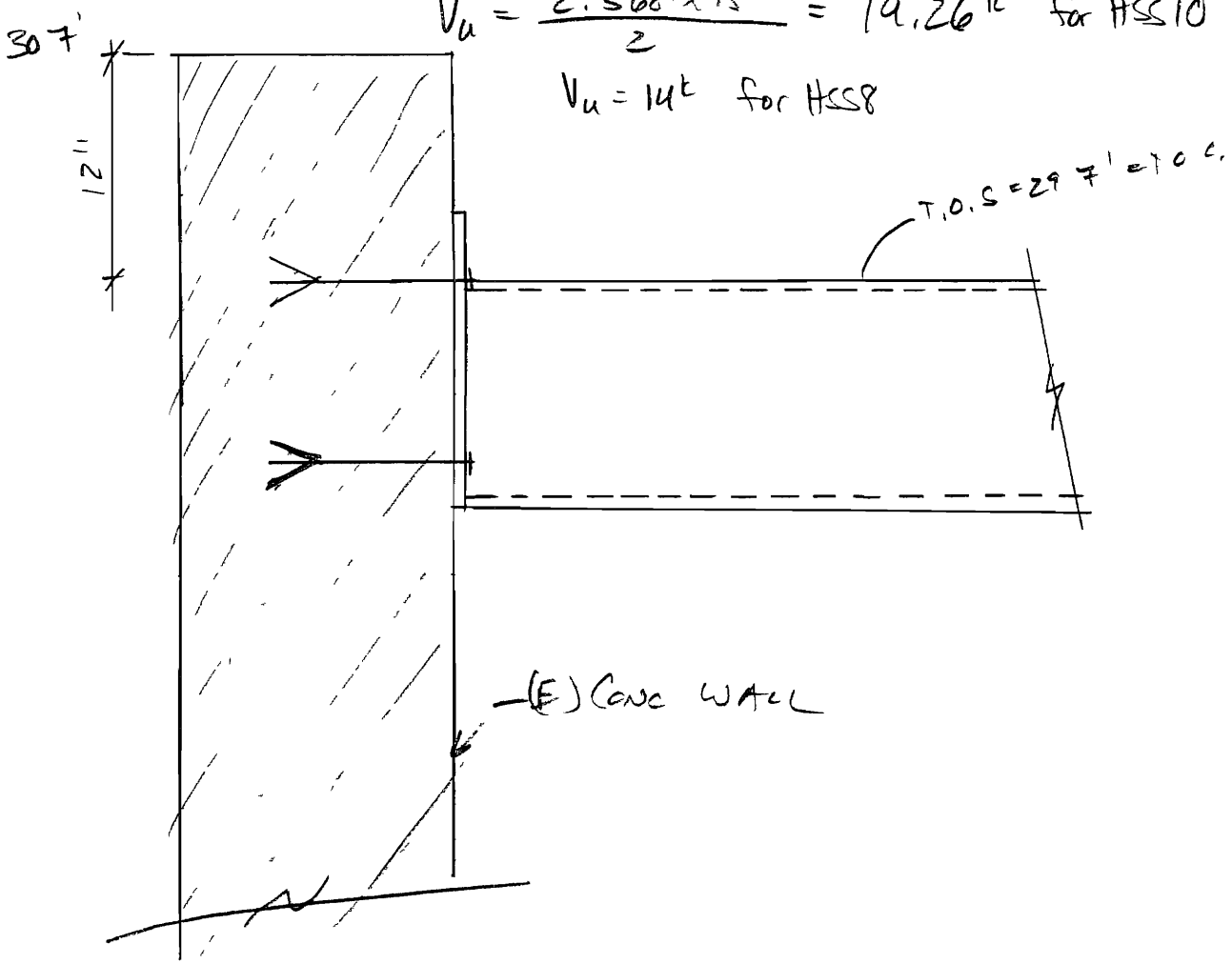

Degenkolb

Subject		Job Number	Date
Job		By JBE	Section
		Checked By	Page 7 of

ELEVATION OF BOLT PATTERN

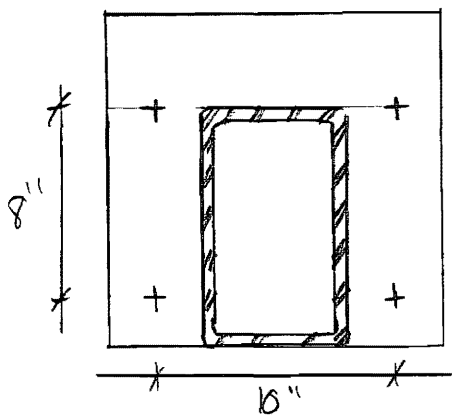

for HSS 10

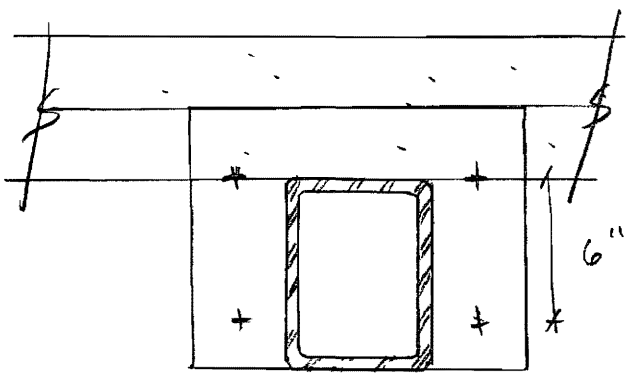

for HSS 8

CHECK CONNECTION USING APP D for HSS10

USE: SIMPSON STRONG BOLT

MAX EMBED = $\frac{12''}{1.5}$ = 8"

TRY 3/4" Ø w/ 7 1/2" embed

$h_{ef} = 6.75''$

SHEAR

D6.1 $\phi V_s = 0.6(19.3) = 11.58$

$11.58^k \times 4 = 46^k \times 0.75 = 35^k > 19.26^k$ // OK

D6.2 N/A B/C edge distance so large

D6.3 $k_{cp} = 2.0$

$\phi = 0.7$

$V_{cpg} = k_{cp} N_{cbg}$

$N_{cbg} = \frac{A_{Nc}}{A_{Nco}} \psi_{ec,N}^{1.0} \psi_{ed,N}^{1.0} \psi_{c,N}^{1.0} \psi_{cp,N}^{1.0} N_b$

$A_{Nc} = (10 + 3(6.75))(8 + 3(6.75)) = 854.6 in^2$

$A_{Nco} = 9(6.75)^2 = 410 in^2$

$N_b = k_c \sqrt{f'_c} h_{ef}^{1.5}$

$= 17\sqrt{1200}(6.75)^{1.5} = 10.3^k$

$N_{cbg} = 21.5^k$

$V_{cpg} = 43^k$

$0.75 \phi V_{cpg} = 22.5^k > 19.26^k$ // OK

0.7

SPACING for HSS8 OK BY INSP. for $V_u = 14^k$

Subject:		Job Number	Date
Job		By JBE	Section
		Checked By	Page 9 of

DESIGN CONNECTION @ SOUTH END

HSS TO BEAR & SLIDE ON PL EMBEDDED INTO (E) CONC. WALL.

BEARING

$\phi(0.85 f'_c A_1)$ $A_1 = 12'' \times 6'' = 72 in^2$

$f'_c = 1200 psi$

$\phi = 0.65$

$0.65(0.85)(1200)(72) = 47^k > 20^k$ // OK

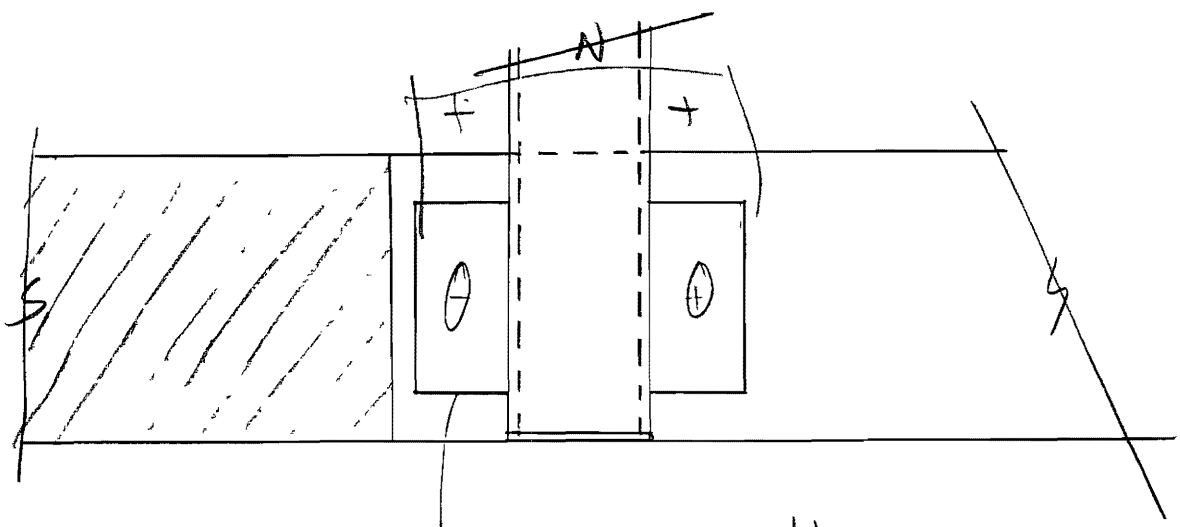

Use SS PL w/ teflon btwn
w/ SS hole in top PL
connect top PL to angles w/ bolts
connect angles to HSS w/ welds

LOOK @ LATERAL LOADS ON HANDRAIL

HANDRAIL WT = 155 psf vert.

$$F_p = \frac{0.4\, a_p S_{ps} W_p}{\frac{R_p}{I_p}} \left(1 + 2\frac{z}{h}\right)$$

z = h for bridge

$S_{DS} = 0.73^{10} \rightarrow 1.09$ ← CA

$W_p = 155$ psf

$a_p = 2.5$

$R_p = 2.5$

$I = 1.5$

$F_p = 1.314\, W_p = 204$ psf

$\times 4' = 815$ plf

LOAD ON HANDRAIL

200# conc LOAD } → SEISMIC CONTROLS
50 plf

FOR MOMENT => 50 plf × h = 815 plf × $\frac{h}{2}$

seism c still controls

WIND

→ SEISMIC CONTROLS BY INSP

Subject	Job Number	Date
Job	By JBE	Section
	Checked By	Page 11 of

CHECK BENDING IN WALL

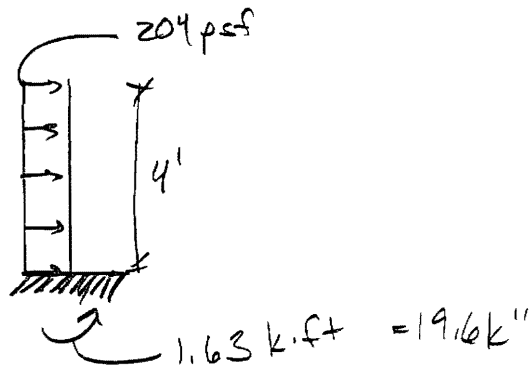

6" WIDE CONC. WALL
try #5 @ 12" o.c.

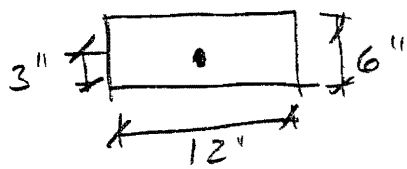

$A_s = 0.31 \text{ in}^2$
$f_y = 60$ ksi
$f'_c = 4$ ksi
$b = 12''$
$d = 3''$

$a = \frac{A_s f_y}{0.85 f'_c b} = 0.46''$

$\phi M_n = 0.9 A_s f_y (d - a/2)$
$= 46.4$ k''

DCR = 0.42 // OK

Subject:		Job Number	Date
Job		By JBE	Section
		Checked By	Page 12 of

LOOK @ TORSIONAL OT @ ends of bm

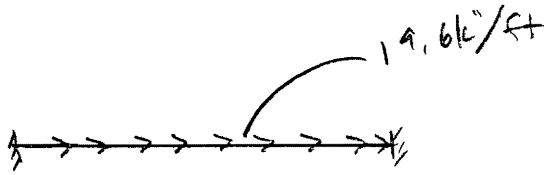

$19.6\ k''/ft \times 15'/2 = 147\ k''$

w/ 10" spacing in BOLTS

$T = 14.7^k$ TOO HIGH

TRY TAKING TORSION OUT IN CONC OVER MTL DECK

19.6 k" w/ 3" moment arm

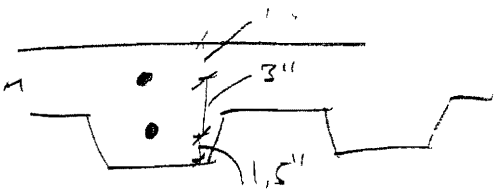

$= 6.5^k$ Per bar
Tension

#4 bar ⇒ 0 2 x 60 = 12^k
extend 4' min.

last 1' taken out by end conn.

$\frac{1' \times 19.6\ k''}{10''} = 1.95^k$ ⇒ OK BY INSP.

w/ SIMPSON STRONG BOLT Centered in 12" CONC WALL.

Subject:		Job Number	Date
Job		By JBE	Section
		Checked By	Page 13 of

LEDGER Angle for Brick

40psf × 4' = 160plf

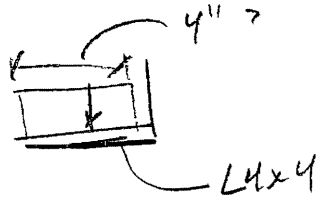

$M = 160^{\#} \times 25'' = 0.4\ k''$ $< 0.9 F_y S$ ($F_y = 36$)

$S > 0.012\ in^3$

$S = \frac{bd^2}{6}$ ($b = 12''$)

$d > 0.078'$ / 10K for

L4x4x5/16

Degenkolb

Subject:		Job Number	Date
Job		By JBT	Section
		Checked By	Page of

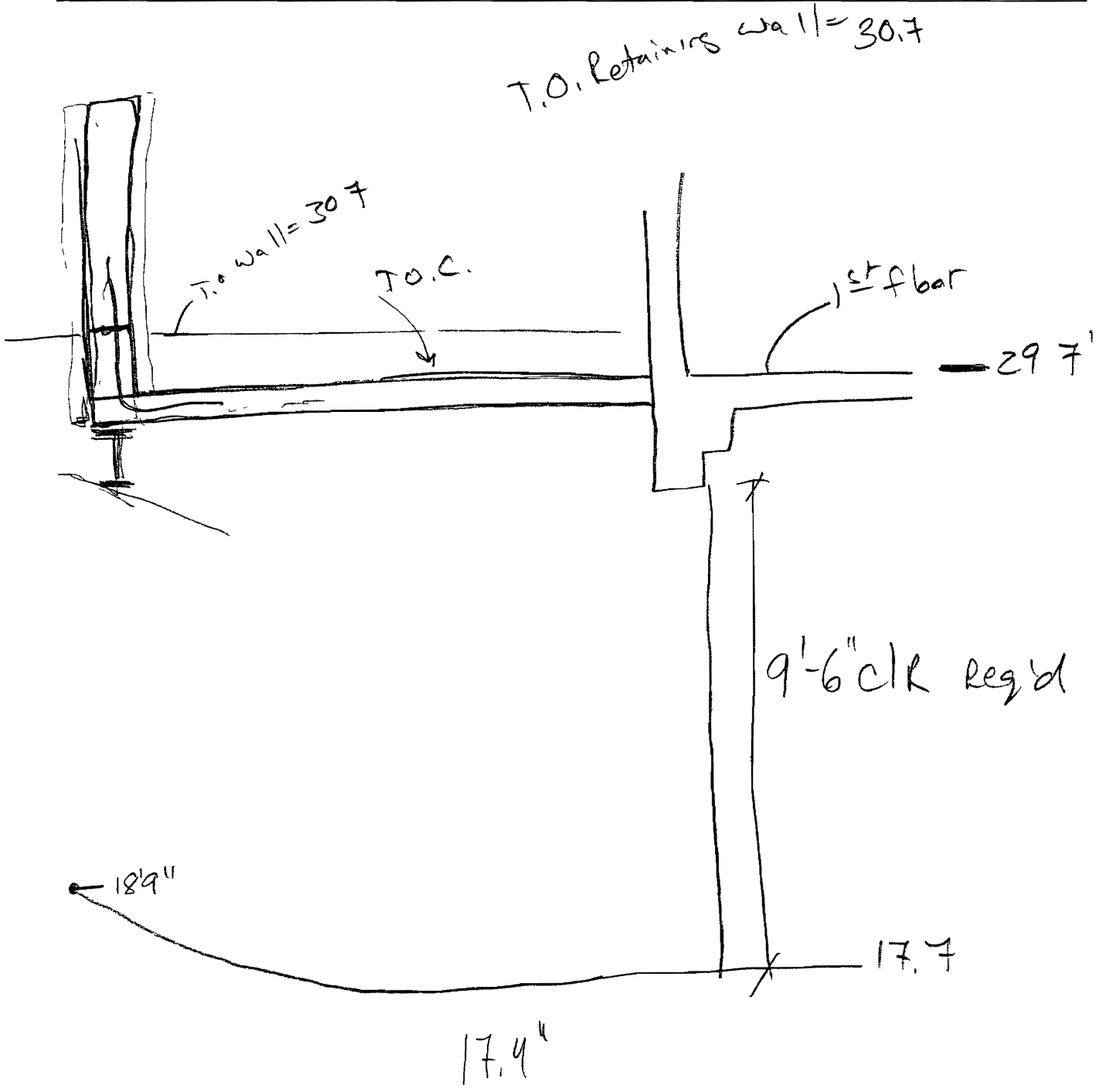

Subject: (N) SLIDE-POLE OPNGS		Job Number	Date
Job		By TBE	Section
		Checked By	Page 1 of

(N) SLIDE-POLE OPNGS — 2ND FLOOR

SLAB TYPES:

	t	BARS
2S3 (@8" o.c.)	4"	#4
2S4	4"	#4
2S1 (@7" o.c.)	4"	

OPNG (A)

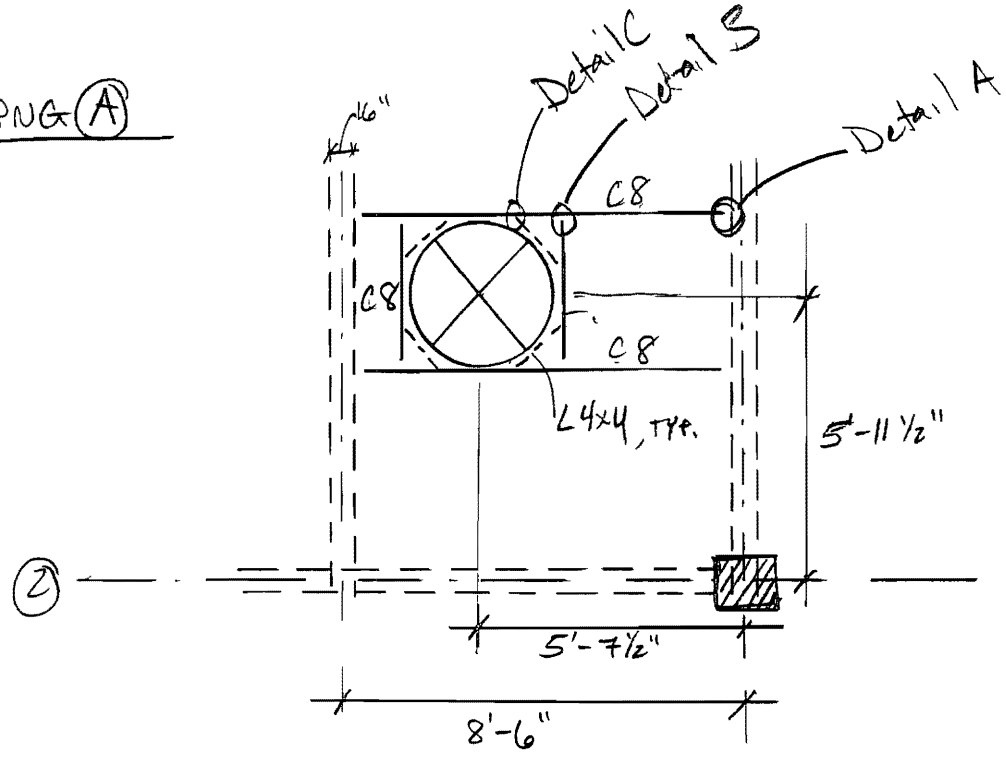

NOTES: If I try to redirect the load and not put any (N) steel in, to do this I will have to use thru-bolts in a plan like this ⇒ 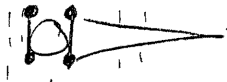 thru bolts.

I don't think thru bolts are an option B/C this is on the 2nd floor ⇒ // go w/ channels.

Degenkolb

Subject.	Job Number	Date
Job	By JBE	Section
	Checked By	Page 2 of

DESIGN BM

$1.2D + 1.6L = 1.2\left(\frac{4}{12}\right)(\cancel{100}) + 1.6(100)$
$= 220\,psf$

$220\,psf \times 3'$ TRIB $= 660\,plf$
↳ CONC

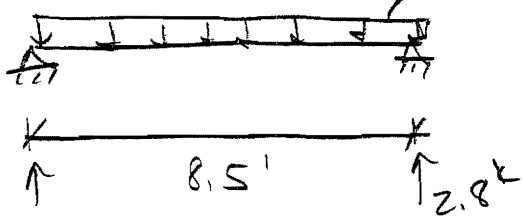

$M_u = \frac{wL^2}{8} = 6\,k' = 71.5\,k''$

$w/C \Rightarrow F_y = 36\,ksi$

$M_u < \phi F_y S$
$\phi = 0.9$

$S \geq 2.2$

USE C8x11.5 w/ $S = 8.14$ DCR = 0.27

[illegible]

$M_u = 120\,k''$ $S \geq 3.[illegible]$ DCR = 0.45

DESIGN CONN @ END FOR 2.8k

- APPENDIX D

[illegible]
+ b width 2'
[illegible]

Subject	Job Number	Date
Job	By JBE	Section
	Checked By	Page 3 of

D6.1 Steel strength => ok by insp.

D6.2 Concrete breakout strength

$$V_{cb} = \frac{A_{vc}}{A_{vco}} \psi_{ed,v}^{1.0} \psi_{c,v}^{1.0} \psi_{cc,v}^{1.0\ cons.} V_b$$

$c_{a_1} = 6''$ → to top Bolt

$A_{vc} = [4+4+3(6'')] \times 9' = 234 \text{ in}^2$

$A_{vco} = 4.5(6)^2 = 162 \text{ in}^2$

$$V_b = 7\left(\frac{l_e}{d_o}\right)^{0.2} \sqrt{d_o}\sqrt{f'_c}\,(c_{a_1})^{1.5}$$

$l_e = 5\frac{1}{2}''$

$d_o = 5/8$

$f'_c = 1200$

$V_b = 4.35^k$

$V_{cb} = 6.28$

$\phi\ 0.75\ V_{cb} = 3.5^k > 2.8^k$ // OK

ϕ → 0.75

D6.3 Concrete pg out => ϕ control by insp.

Subject:		Job Number	Date
Job		By JBE	Section
		Checked By	Page 4 of

Bm Depths for Channel to (E) conc. bm detail

=> Same detail @ skylight roof

Pole (A) 16"
16"

Pole (B) 16"
17"

Pole (C) 16"
24"

Skylight (E) 24"
24"

Design Detail for 16" min

16" - 4" slab = 12" clear

Degenkolb

Subject		Job Number	Date
Job		By TBE	Section
		Checked By	Page 1 of

check Brns for Poles (B) + (C)

(B) → span = 10' // ok by insp.
(C) span = 10.65' // ok by insp.

DCR's so low

connection ok TOO B/C very cos. on the loading.

Degenkolb

Subject. 3rd floor Tower Infill		Job Number	Date
Job		By JBE	Section
		Checked By	Page of

3rd Floor Tower Infill

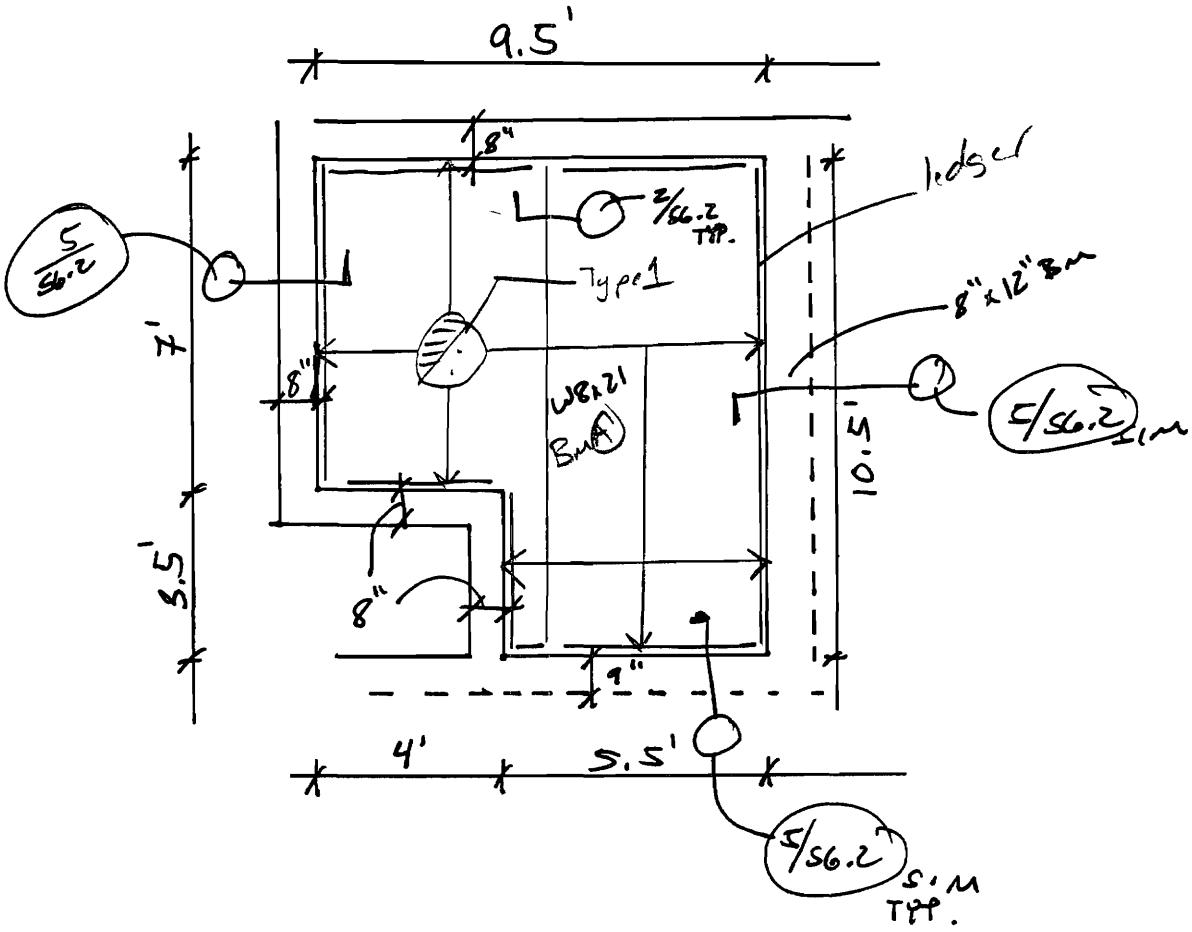

Subject	Job Number	Date
Job	By JBE	Section
	Checked By	Page of

DESIGN BM Ⓐ

DL = 60psf
LL = 100psf } From 2nd floor .4 fill

1.2D + 1.6L = 232 psf

TRIB WIDTH = $\frac{21.5}{2}$ = 9.75'

w_u = 1102 plf

$M_u = \frac{wl^2}{8}$ $l = 10.5'$

M_u = 15 k' = 182 k"

$\phi M_n > M_u$

$(0.9) F_y S > M_u$ NO LTB

$S > 4.04 \text{ in}^3$

USE W8x21

w/s = 18.2

DCR = 0.22 //0K

Reaction @ end

V = 5.8k

USE Detail 2/S6.2 Designed to take 30k //0K

Subject		Job Number	Date
Job		By TBE	Section
		Checked By	Page of

Ledger angle

Trib width = $\frac{9.5}{4}$ = 2.375'

232psf × 2.375'

w_u = 551plf ⇒ Designed for 1276plf

use detail 5/S6.2

Degenkolb

Subject: Infill 3rd Flr	Job Number: A7437007	Date 2/26/08	
Job Fire Station 1	By DAL	Section	
	Checked By	Page	of

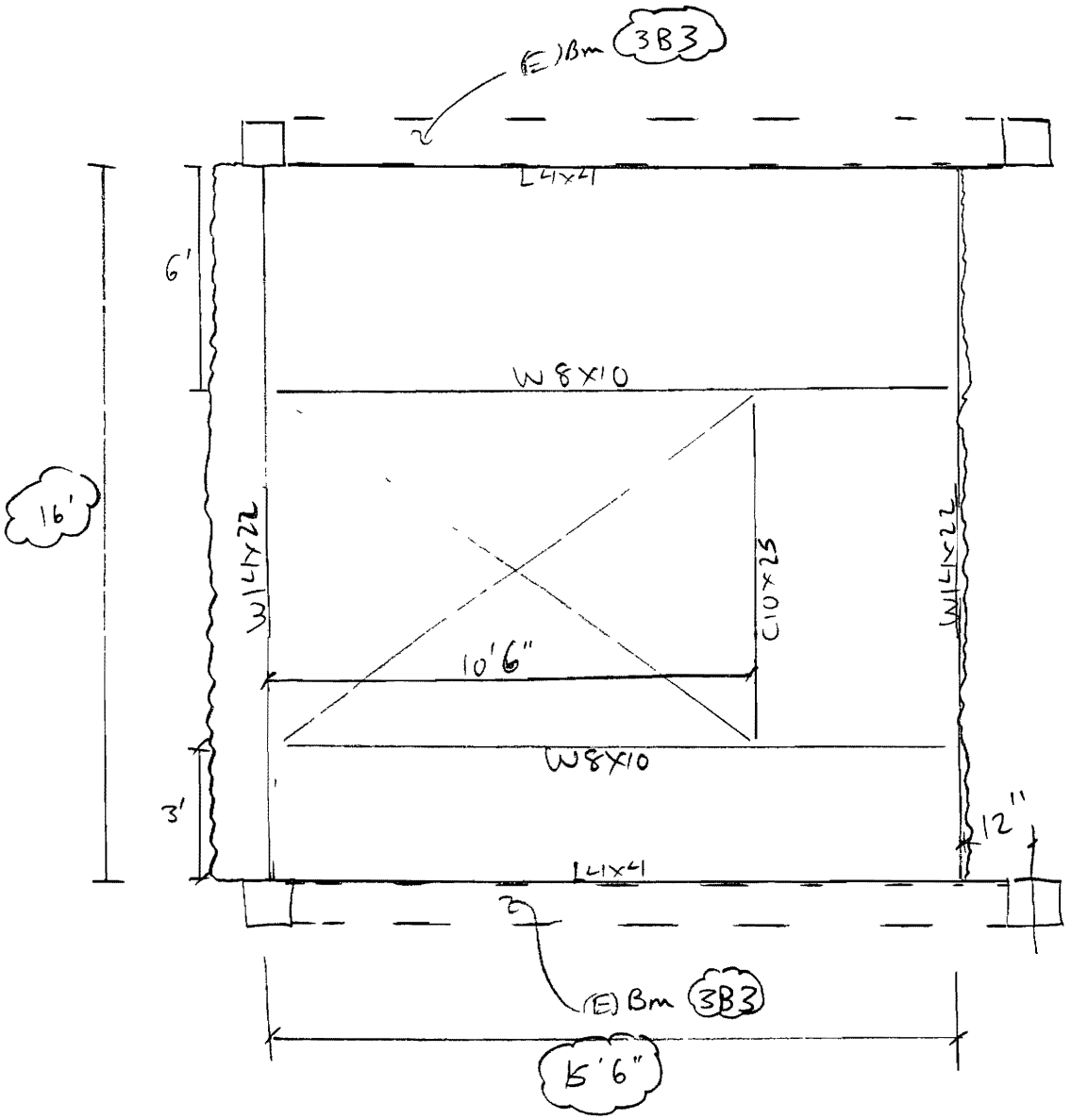

Subject. Infill 3rd Flr		Job Number A7013T007	Date 2/26/02
Job FS1		By DAL	Section
		Checked By	Page of

(N) SH Bms (N/S Bms)

DL 45 psf Conc
15 psf Misc Mech
15 psf LL Const

LL 100 psf

trib width on Bm = 3' on left
3.5' on right for 5'6" of length

length of Bm = 15'6"
Ram Sbeam
Use W8x10 w/ 3/4"Ø Studs @ 12" o.c

Licensed to Degenkolb Engineers
Job Fire Station 1 Steel Code LRFD

SPAN INFORMATION ~~2nd~~ 3rd Floor Infill Stl Beams
Beam Size (User Selected) = W8X10 Fy = 50 0 ksi
Total Beam Length (ft) = 15 50

COMPOSITE PROPERTIES (Not Shored)	Left	Right
Concrete thickness (in)	3 25	3 25
Unit weight concrete (pcf)	110 00	110 00
f'c (ksi)	4 00	4 00
Decking Orientation	perpendicular	perpendicular
Decking type	VERCO W3 Formlok	VERCO W3 Formlok
Distance to Adjacent (ft)	Edge 11 00	Beam 11 00

beff (in) = 46 50 Y bar(in) = 10 88
Mnf (kip-ft) = 119 97 Mn (kip-ft) = 116 47
C (kips) = 140 17 e (in) = 9 75
Ieff (in**4) = 212 73 Itr (in**4) = 217 75
Stud length (in) = 5 00 Stud diameter (in) = 0 75
Stud Capacity (kips) Qn = 21 2
# of studs Max = 15 Partial = 6 Actual = 15
Number of Stud Rows = 1, Percent of Full Composite Action = 94 71

LOADS Self Weight = 0 010 k/ft
Line Loads (k/ft)

Dist1	Dist2	DL1	DL2	Pre DL1	Pre DL2	LL1	LL2
0 00	15 50	0 180	0 180	0 180	0 180	0 300	0 300
10 50	15 50	0 210	0 210	0 210	0 210	0 350	0 350

SHEAR (Ultimate) Max Vu 1 2DL+1 6LL (kips) = 8 89 0 90Vn = 36 22 ok

MOMENTS

Span	Cond	LoadCase	Mu kip-ft	@ ft	Lb ft	Cb	Phi	Phi*Mn kip-ft
Center	Pre DL	1 4DL	9 9	8 7	---	---	0 90	32 95
Center	Max +	1 2DL+1 6LL	26 6	8 7	---	---	0 85	99 00
Controlling		1 4DL	9 9	8 7	---	---	0 90	32 95

REACTIONS (Unfactored) (kips)	Left	Right
Initial reaction	1 64	2 35
DL reaction	1 64	2 35
Max + LL reaction	2 61	3 79
Max + total reaction	4 25	6 15

DEFLECTIONS

Initial load (in)	at 7 91 ft =	-0 348	L/D =	535
Live load (in)	at 7 91 ft =	-0 080	L/D =	2315
Post Comp load (in)	at 7 91 ft =	-0 080	L/D =	2315
Total load (in)	at 7 91 ft =	-0 428	L/D =	435 ok

Subject. Infill 3rd Flr		Job Number A7437007	Date 2/26/08
Job FS1		By DAL	Section
		Checked By	Page of

(N) STL Bms (E/W Bms)

DL 60psf

$P_u = (60psf)[(3')(8') + (3.5')(5.5')] = 2.6^k$

LL 100psf

$P_u = 26\left(\frac{100}{60}\right) = 43^k$

Ram Sbeam Analysis

Use ~~W 10X12~~ W 14X22 w/ 3/4" ø studs @ 12" o.c.

$V_u = 12^k$

Use Detail Similar to 2/S6.2 but w/ Throughbolts

ok by Inspection

Licensed to Degenkolb Engineers
Job Fire Station 1 Steel Code LRFD

6370

SPAN INFORMATION 3rd Floor Infill Stl Beams
Beam Size (User Selected) = W10X12 Fy = 50 0 ksi
Total Beam Length (ft) = 16 00

COMPOSITE PROPERTIES (Not Shored)	Left	Right
Concrete thickness (in)	3 25	3 25
Unit weight concrete (pcf)	110 00	110 00
f'c (ksi)	4 00	4 00
Decking Orientation	perpendicular	perpendicular
Decking type	VERCO W3 Formlok	VERCO W3 Formlok
Distance to Adjacent (ft)	Edge 11 00	Beam 11 00

beff (in)	=	48 00	Y bar(in)	=	12 44
Mnf (kip-ft)	=	156 98	Mn (kip-ft)	=	134 72
C (kips)	=	127 33	e (in)	=	10 79
Ieff (in**4)	=	278 98	Itr (in**4)	=	319 29
Stud length (in)	=	5 00	Stud diameter (in)	=	0 75

Stud Capacity (kips) Qn = 21 2
# of studs Max = 16 Partial = 6 Actual = 16
Number of Stud Rows = 1, Percent of Full Composite Action = 71 94

LOADS Self Weight = 0 012 k/ft
Point Loads (kips)

Dist	DL	Pre DL	LL	Flange Bracing Top	Bottom
3 00	2 60	2 60	4 30	Yes	Yes
10 00	2 60	2 60	4 30	Yes	Yes

SHEAR (Ultimate) Max Vu 1 2DL+1 6LL (kips) = 11 99 0 90Vn = 50 63 OK

MOMENTS

Span	Cond	LoadCase	Mu kip-ft	@ ft	Lb ft	Cb	Phi	Phi*Mn kip-ft
Center	Pre DL	1 4DL	18 3	10 0	---	---	0 90	46 99
Center	Max +	1 2DL+1 6LL	49 2	10 0	---	---	0 85	114 51
Controlling		1 2DL+1 6LL	49 2	10 0	---	---	0 85	114 51

REACTIONS (Unfactored) (kips)	Left	Right
Initial reaction	3 18	2 21
DL reaction	3 18	2 21
Max + LL reaction	5 11	3 49
Max + total reaction	8 29	5 70

DEFLECTIONS

Initial load (in)	at	8 00 ft =	-0 368	L/D =	522
Live load (in)	at	8 00 ft =	-0 114	L/D =	1689
Post Comp load (in)	at	8 00 ft =	-0 114	L/D =	1689
Total load (in)	at	8 00 ft =	-0 481	L/D =	399 OK

Subject: 3rd Flr Infill	Job Number A7437007	Date 2/26/08	
Job FSI	By DAL	Section	
	Checked By	Page	of

Check connection of W14 North of Grid (C)

$w_u = [12(60psf) + 12(100psf)](\frac{12'}{2}) = 14\ klf$

$V_u = 16^k$

Capacity of Detail 2/S6.2 . $\phi V_n = 22^k > V_u$ ok

Degenkolb

DEGENKOLB ENGINEERS

San Francisco
235 Montgomery Street Suite 500
San Francisco California 94104-2908
415 392 6952 *phone*
415 981 3157 *fax*

Los Angeles
300 South Grand Avenue Suite 1115
Los Angeles, California 90071-3121
213 596 5000 *phone*
213 596 5960 *fax*

Portland
707 SW Washington Street, Suite 600
Portland, Oregon 97205
503 223 9932 *phone*
503 242 1780 *fax*

Oakland
300 Frank H Ogawa Plaza, Suite 450
Oakland, California 94612-2047
510 272 9040 *phone*
510 272 9526 *fax*

San Diego
225 Broadway, Suite 1325
San Diego California 92101
619 515 0299 *phone*
619 515 0298 *fax*

Seattle
600 University Street, Suite 720
Seattle, Washington 98101
206 262 9240 *phone*
206 262 9346 *fax*

www degenkolb com