CITY OF PORTLAND, OREGON - BUREAU OF DEVELOPMENT SERVICES

1900 SW Fourth Avenue, Suite 5000 • Portland, Oregon 97201 • www.portlandonline.com/bds • Fax 503-823-7425

2

Facility Permit Plan Intake Form

FOR INTAKE, STAFF USE ONLY

Date Received 10/3/13

Building Registration # 13-126282-FC

Fixed Bid

Bin # B-2

Building Permit # 13-213139-FA

Mechanical #

Plumbing Permit #

Electrical Permit #

Building/Mechanical JOE 1

Electrical DAVE 3

Plumbing

Fire JERRY

Planning EMILY 2

BES

PDOT

Structural

Other

APPLICANT: Complete all sections below that apply to the project. Please print legibly.

Print Name Mike Coyle Sign Name

Street Address Faster Permits, 14334 NW Eagleridge Ln.

City Portland State OR Zip Code 97229

Day Phone 503.680.5497 FAX email mike@fasterpermits.com

Plans / permits available for pick up at 1900 SW 4th Avenue, 2nd floor between 8:00 am to 5:00 pm

Contact Name for plan/permit pick up Rob Humphrey

Day Phone 503.320.5030 email mike@fasterpermits.com

Project Building Name / # T6

Project Address or Location 7915 N. Marine Drive

Project Name and Description CDC Access Control Fence

Install new chain link security fence with access gates at the CDC warehouse.

Total Project Value $150,000 Project Reference #/Billing ID # EAN13D001 101821

Building Contractor Brockamp & Jaeger Inc. CCB # 30

MechanicalContractor CCB #

Electrical Contractor CCB# License #

Plumbing Contractor CCB# License #

13-213139-FA

☒ **Building Permit**

No. of Stories 1

Const. Type II-B

[Y] [N] Alarms Required

[Y] [N] Smoke Det. Req'd

[Y] [N] Sprinklers Req'd

[Y] [N] Struct. Eng / Calcs Submitted

☐ **Electrical Permit**

Please provide a completed standard electrical permit application form. You may mail or deliver it to 1900 SW 4th Avenue, Portland, Oregon 97201 or FAX to 503-823-7425

☐ **Plumbing Permit**

Number of Fixtures

Back Flow Devices

Water Service (# of Feet)

Medical Gas

Other

City of Portland
REVIEWED FOR CODE COMPLIANCE
OCT 14 2013
13-213139-FA
Permit Number

☐ **Mechanical Permit**

Mechanical Valuation

Description

Port of Portland

THE PORT OF PORTLAND COMMISSION
JIM CARTER - PRESIDENT
PAUL A . ROSENBAUM - VICE PRESIDENT
PETER BRAGDON - TREASURER
DIANA DAGGETT - SECRETARY
TOM TSURUTA
LINDA M. PEARCE
BRUCE HOLTE
TOM CHAMBERLAIN
ROBERT L. LEVY

BILL WYATT, EXECUTIVE DIRECTOR
TOM PETERSON, CHIEF ENGINEER
VINCE GRANATO, CHIEF OPERATING OFFICER

SHEET NO.	DESCRIPTION
1 (GI-1)	AERIAL & VICINITY MAP
2 (C-1)	FENCING PLAN
3 (C-2)	FENCE AND GATE DETAILS
4 (C-3)	TURNSTILE DETAILS
5 (E-1)	ELECTRICAL AND COMMUNICATIONS PLAN
6 (E-2)	ELECTRICAL DETAILS 1
7 (E-3)	ELECTRICAL DETAILS 2
8 (E-4)	ELECTRICAL DETAILS 3
9 (E-5)	ELECTRICAL DETAILS 4
10 (E-6)	ELECTRICAL DETAILS 5
11 (E-7)	COMMUNICATIONS DETAILS

City of Portland
REVIEWED FOR CODE COMPLIANCE
OCT 14 2013
13-213139-FA
Permit Number

13-213139-FA

TERMINAL 6

FUEL ISLAND AND CDC ACCESS CONTROLS

CONSTRUCTION SET

JUNE 2013

DESIGN NO. 2013D001 PROJECT MANAGER

PROJECT NO. 101821 DRAWING NO. T6 2013-1

T6 - FUEL ISLAND AND CDC ACCESS CONTROLS

VICINITY MAP
N.T.S.

NOTES:

1. A SMALL STAGING AREA WILL BE PROVIDED NEAR THE SOUTHERN PROJECT AREA.
2. HORIZONTAL DATUM IS BASED ON PORT OF PORTLAND LOCAL PROJECTION PER PORT OF PORTLAND DRAWING RG 2011-3024.
3. VERTICAL DATUM IS NAVD88.

LEGEND:

- BRASS CAP
- STAINLESS STEEL ROD IN MONUMENT BOX

SURVEY CONTROL

STATION	NORTHING	EASTING	ELEVATION	DESCRIPTION
35	79988.78	75570.87	29.34	5/8" IR W/POP YPC INSCRIBED "PORT OF PORTLAND"
36	80702.63	74711.76	30.82	4" BRASS CAP DLC CORNER

T6 AERIAL
SCALE: 1"=250'
1
GI-1

NO.	DATE	BY	REVISIONS	CK'D	APP'VD
1	8/8/13	NRH	AS BID		JO

PORT OF PORTLAND
PORTLAND, OREGON

2013D001 — DESIGN NUMBER
101821 — PROJECT NUMBER

REGISTERED PROFESSIONAL ENGINEER 52,278 OREGON JANUARY 10, 2008 JACK R. OSTLUND JR.
EXP: 12/31/14

DESIGNED BY: T. CONDON
DRAWN BY: M. KHAL
CHECKED BY: J. OSTLUND
DATE: JUN 2013
SCALE: 1"=250'

TERMINAL 6

FUEL ISLAND AND CDC ACCESS CONTROLS
AERIAL AND VICINITY MAP

SUBMITTED BY: JAY OSTLUND — PROJECT ENGINEER
TYPE: CD
DRAWING NO.: T6 2013-1 1/11 (GI-1)

PRINTED: 8/8/2013 1:18:18 PM HAIDN r:\marine\t6\2013\0001\as bids\t6 fuel islands_cdc entrance\dwg\gi and civil\gi sheet aerial pop loc.dwg

REDUCED 50%

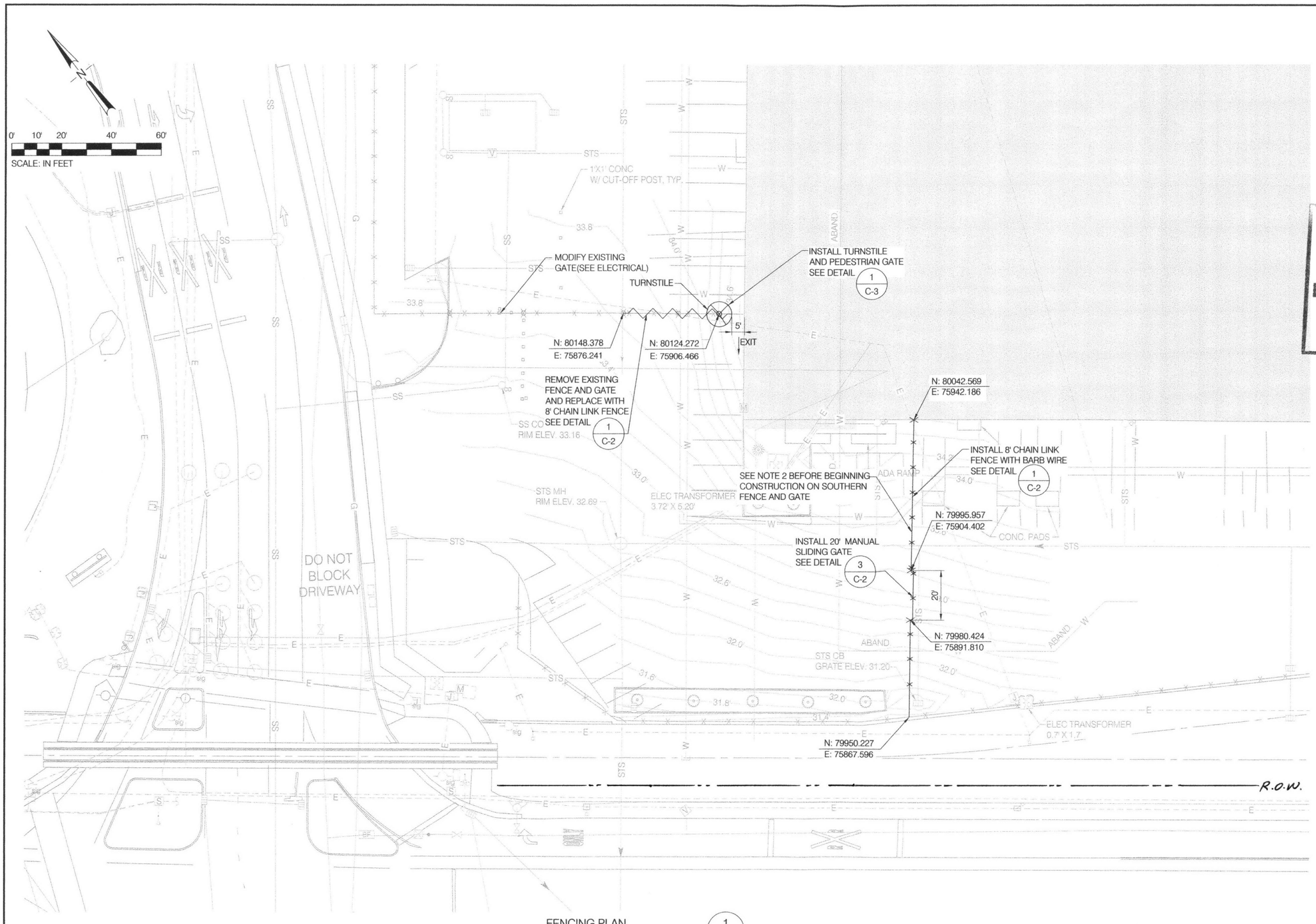

City of Portland
Bureau of
Development Services
By SJS Date 10/11/13
Approved by
Planning and Zoning Review

NOTES:

1. WORK HOURS MAY BE RESTRICTED DEPENDING ON SHIPPING VESSEL ACTIVITY.
2. WORK ON THE SOUTHERN FENCE AND GATE SHALL BE PERFORMED AFTER OCTOBER 1, 2013.

FENCING PLAN 1 / C-1
SCALE: 1" = 20'

NO.	DATE	BY	REVISIONS	CK'D	APPV'D
1	8/8/13	NRH	AS BID		JO

PORT OF PORTLAND
PORTLAND, OREGON

2013D001 DESIGN NUMBER
101821 PROJECT NUMBER

REGISTERED PROFESSIONAL ENGINEER 52,278 OREGON JANUARY 10, 2006 JACK R. OSTLUND JR.
EXP: 12/31/14

DESIGNED BY J. OSTLUND
DRAWN BY M. KHAL
CHECKED BY J. OSTLUND
DATE JUN 2013
SCALE 1"= 20'

TERMINAL 6

FUEL ISLAND AND CDC ACCESS CONTROLS
FENCING PLAN

SUBMITTED BY JAY OSTLUND
PROJECT ENGINEER

TYPE CD | DRAWING NO. T6 2013-1 2/11 (C-1)

PRINTED: 8/8/2013 1:20:40 PM HAIDN r:\marine\t6\2013\0001\as bids\t6 fuel islands_cdc entrance\dwg\gi and civil\civil fence drawing.dwg

DRAWING SCALE IS REDUCED 50% WHEN SHEET SIZE IS 11" x 17".

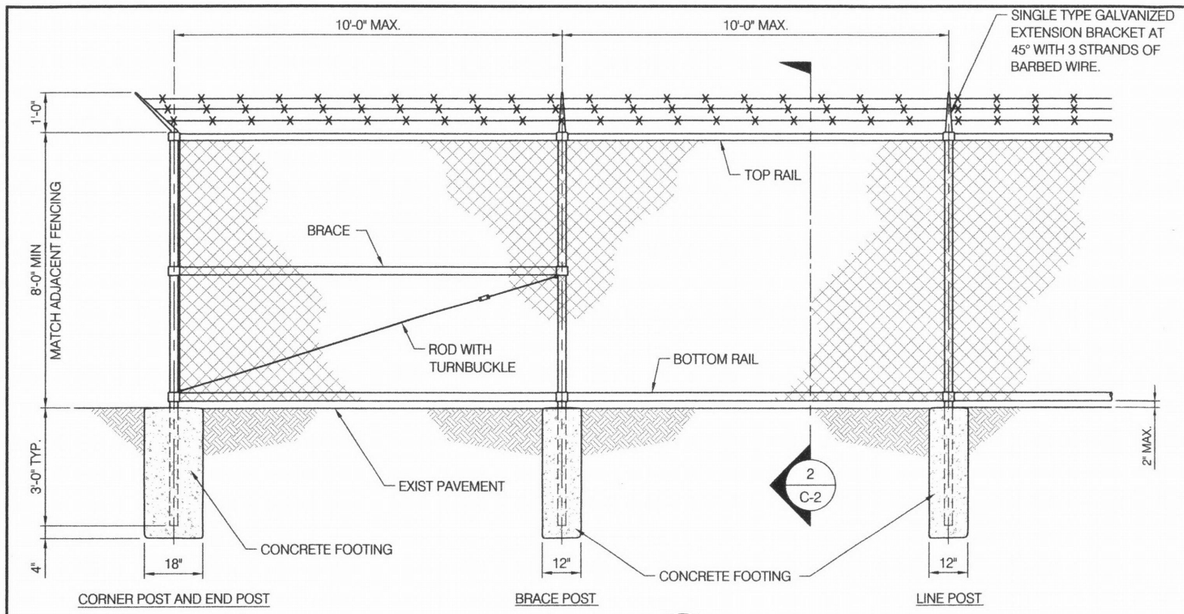

SECURITY FENCE DETAIL 1 / C-2
SCALE: NTS

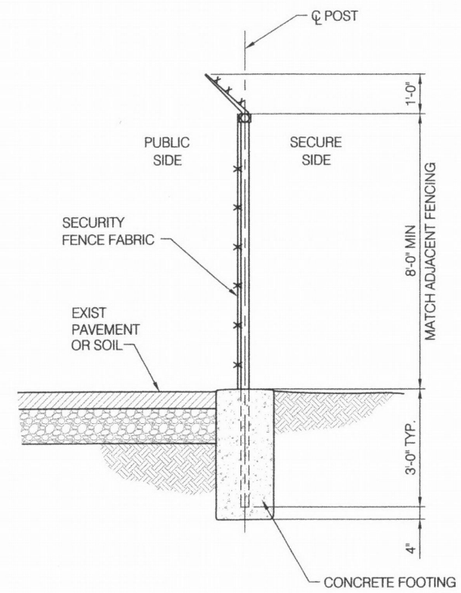

SECURITY FENCE SECTION 2 / C-2
SCALE: NTS

City of Portland
Bureau of
Development Services
By SNS Date 10/11/13
Approved by
Planning and Zoning Review

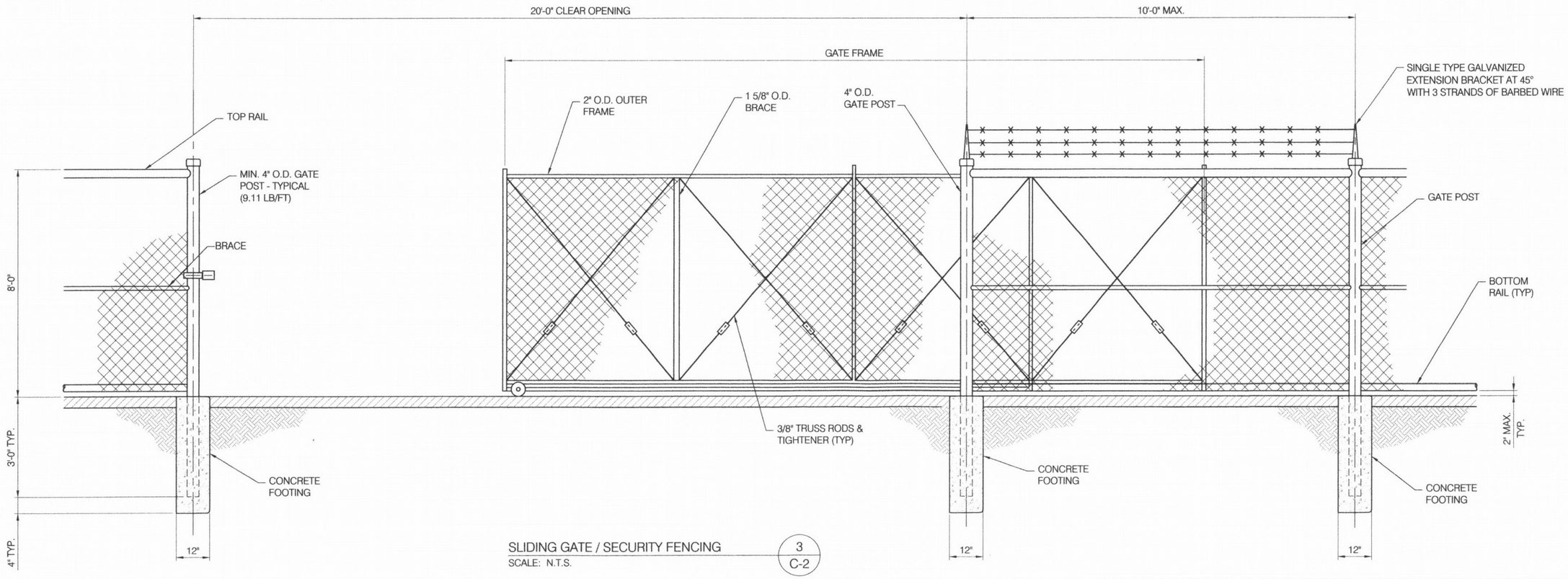

SLIDING GATE / SECURITY FENCING 3 / C-2
SCALE: N.T.S.

NO.	DATE	BY	REVISIONS	CK'D	APP'VD
1	8/8/13	NRH	AS BID		JO

PORT OF PORTLAND
PORTLAND, OREGON

2013D001 — DESIGN NUMBER
101821 — PROJECT NUMBER

REGISTERED PROFESSIONAL ENGINEER 52,278 OREGON JANUARY 10, 2006 JACK R. OSTLUND JR.
EXP: 12/31/14

DESIGNED BY	J. OSTLUND
DRAWN BY	M. KHAL
CHECKED BY	J. OSTLUND
DATE	JUN 2013
SCALE	N.T.S.

TERMINAL 6

FUEL ISLAND AND CDC ACCESS CONTROLS
FENCE AND GATE DETAILS

SUBMITTED BY: JAY OSTLUND — PROJECT ENGINEER
TYPE: CD
DRAWING NO.: T6 2013-1 3/11 (C-2)

PRINTED: 8/8/2013 1:36:23 PM HAIDN r:\marine\t6\2013\0001\as bids\t6 fuel islands_cdc entrance\dwg\gi and civil\civil fence drawing.dwg

DRAWING SCALE IS REDUCED 50% WHEN SHEET SIZE IS 11" x 17".

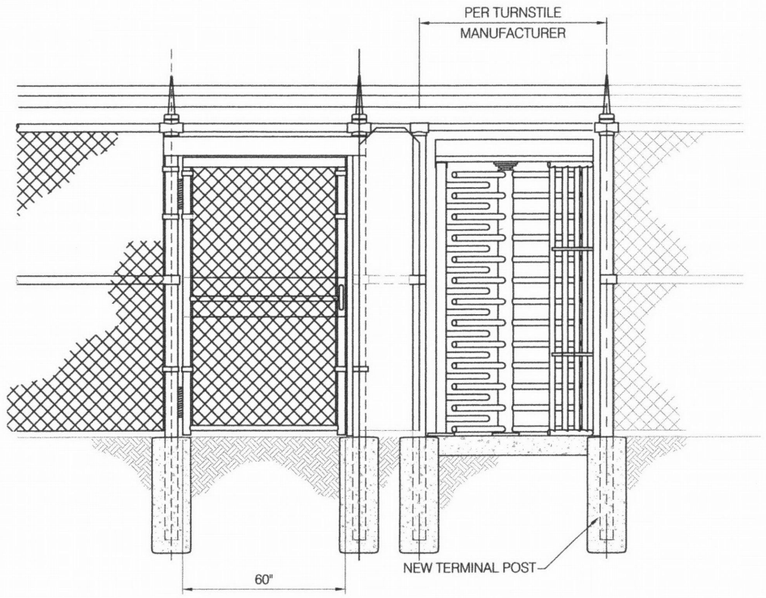

TURNSTILE
INSTALLATION DETAIL (1 / C-3)
SCALE: NTS

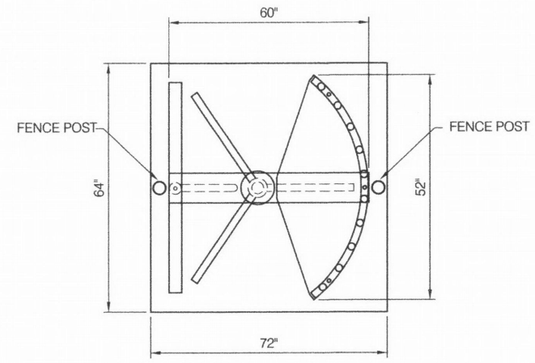

PLAN VIEW

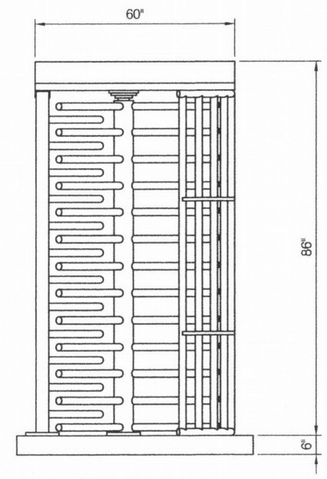

ELEVATION

NOTES:

1. DIMENSIONS MATCH TURNSTYLE GATE AS MANUFACTURED BY "TOMSED CORP." MODEL THT-100ECP
2. MATERIAL TO HAVE PRE-COAT OF HOT DIPPED GALVANIZING FOLLOWED BY A BLACK COLOR, POWDER COATED FINISH
3. MINIMUM PAD SIZE TO BE 72" x 64" x 6" THICK AND MUST BE LEVEL WITHIN 1/4"
4. INSTALL PER MANUFACTURER'S RECOMMENDATIONS. SEE (1 / C-3)
5. TURNSTILE TO BE "FAIL-SECURE" TO ALLOW EXIT

TURNSTILE DETAIL (2 / C-3)
SCALE: NTS

NO.	DATE	BY	REVISIONS	CK'D	APPV'D
1	8/8/13	NRH	AS BID		JO

PORT OF PORTLAND
PORTLAND, OREGON

2013D001 — DESIGN NUMBER
101821 — PROJECT NUMBER

REGISTERED PROFESSIONAL ENGINEER 52,278 OREGON JANUARY 10, 2006 JACK R. OSTLUND JR.
EXP: 12/31/14

DESIGNED BY: J. OSTLUND
DRAWN BY: M. KHAL
CHECKED BY: J. OSTLUND
DATE: JUN 2013
SCALE: N.T.S.

TERMINAL 6

FUEL ISLAND AND CDC ACCESS CONTROLS
TURNSTILE DETAILS

SUBMITTED BY: JAY OSTLUND — PROJECT ENGINEER
TYPE: CD
DRAWING NO.: T6 2013-1 4/11 (C-3)

PRINTED: 8/8/2013 1:35:36 PM HAIDN r:\marine\t6\2013\0001\as bids\t6 fuel islands_cdc entrance\dwg\gi and civil\civil fence drawing.dwg

DRAWING SCALE IS REDUCED 50% WHEN SHEET SIZE IS 11" x 17".

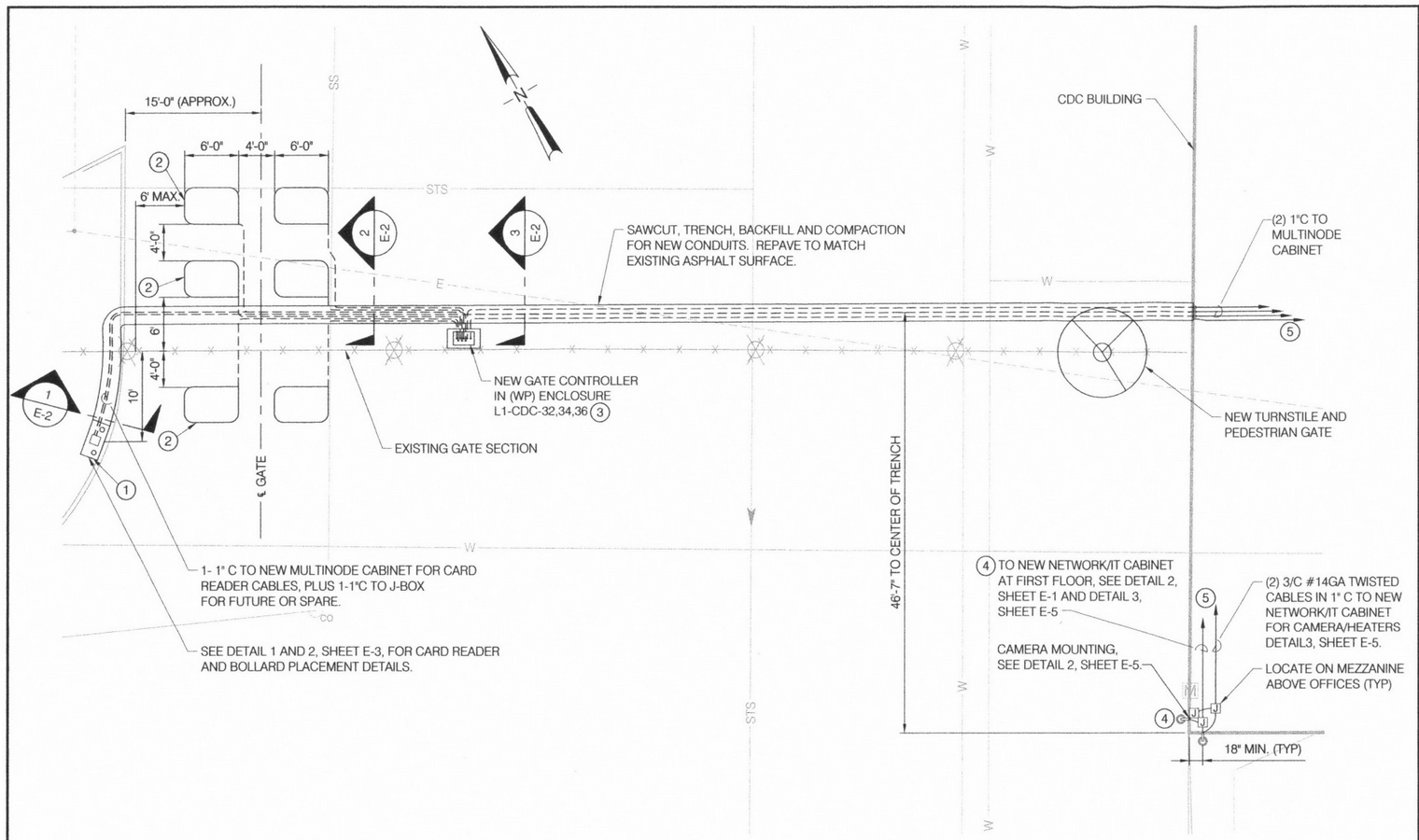

ELECTRICAL LAYOUT PLAN (1 / E-1)
SCALE: 1/8" = 1'-0"

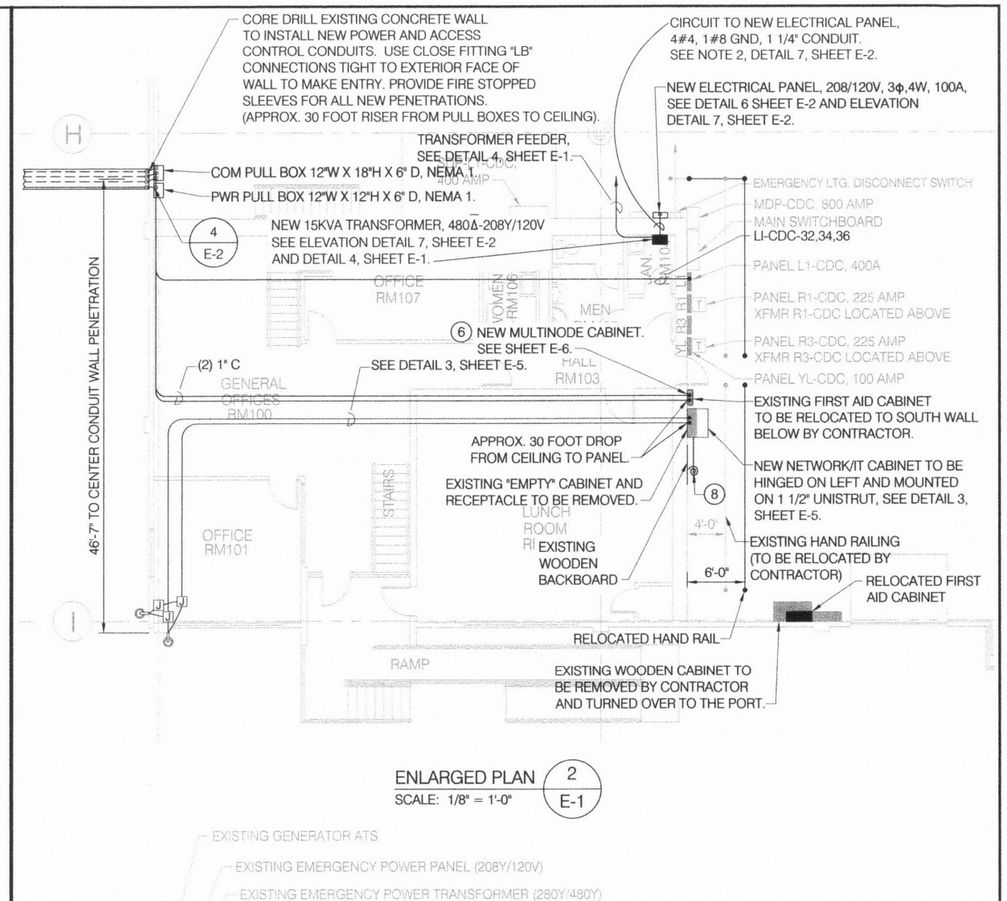

ENLARGED PLAN (2 / E-1)
SCALE: 1/8" = 1'-0"

MEZZANINE (4 / E-1)
SCALE: N.T.S.

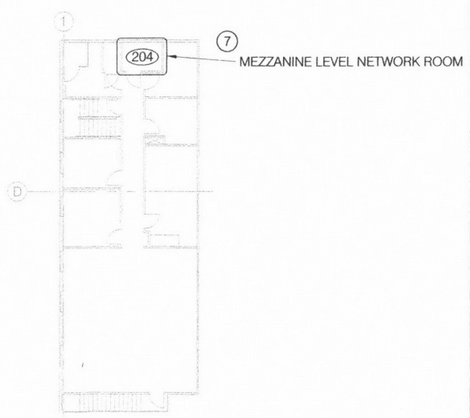

SECOND FLOOR NORTH (3 / E-1)
SCALE: N.T.S.

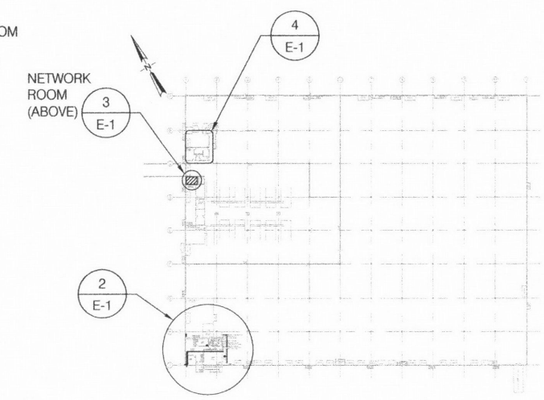

CDC-KEY PLAN
SCALE : N.T.S.

KEY NOTES:

1. INSTALL CARD READER/COMMUNICATION STAND. SEE DETAIL 1, SHEET E-3. ROUTE 1" CONDUIT FROM CARD READER STANDS TO MULTINODE CONTROLLER LOCATED AT FIRST FLOOR LEVEL IN CDC BUILDING. SEE DETAIL 2, SHEET E-1. AND DETAIL 1 , SHEET E-4.
2. INSTALL FOUR SAFETY LOOPS AND TWO EXIT LOOPS IN LOCATIONS SHOWN. SEE DETAIL 1 AND 2, SHEET E-4. ROUTE LOOP LEADERS TO GATE OPERATOR CONTROLLER. PROVIDE 6 LOOP DETECTORS WITH GATE OPERATOR AND CONNECT AS DIRECTED BY THE MANUFACTURER.
3. PULL NEW 3#10, 1 #10 GND THROUGH NEW 1" CONDUIT AND CONNECT TO EXISTING BRANCH PANEL L1. CONFIRM VOLTAGE IS COMPATIBLE WITH CONTROLLER.
4. INSTALL CAMERAS ON EXTERIOR WALL AS SHOWN IN DETAIL 2, SHEET E-5. INSTALL CONDUIT FROM JUNCTION BOX TO NEW NETWORK/IT CABINET AS SHOWN. ROUTE CABLE AND CONNECT AS SHOWN ON DETAIL 3, SHEET E-5.
5. PROVIDE PULL BOXES IN CONDUIT RUNS AS REQUIRED BY CODE, AND/OR AS NEEDED TO COMPLETE THE INSTALLATION OF NEW CABLES AND CONDUCTORS.
6. INSTALL NEW NETWORK/IT CABINET AND MULTINODE CONTROLLER AS SHOWN ON DETAIL 2, THIS SHEET. INSTALLATION SHALL BE IN ACCORDANCE WITH SPECIFICATIONS.
7. INSTALL NEW FIBER CABLE TO EXISTING COMMUNICATIONS RACK AND MAKE ALL TERMINATIONS IN ACCORDANCE WITH SPECIFICATIONS.
8. EXTEND CONDUIT TO NEW NETWORK/IT CABINET. INSTALL NEW FIBER CABLE IN EXISTING CONDUIT TO NETWORK ROOM 204 LOCATED ON THE MEZZANINE LEVEL (APPROX. 300 FOOT RUN). SEE DETAIL 3, SHEET E-1 AND DETAIL 2 SHEET E-7.

NO.	DATE	BY	REVISIONS	CK'D	APPV'D
1	8/8/13	NRH	AS BID		JO

PORT OF PORTLAND
PORTLAND, OREGON

2013D001 — DESIGN NUMBER
101821 — PROJECT NUMBER

REGISTERED PROFESSIONAL ENGINEER 59,667 OREGON MARCH 9, 1993 DAVID H. POWELL
EXP: 12/31/14

DESIGNED BY: L. KENTNER
DRAWN BY: N. HAID
CHECKED BY: D. POWELL
DATE: JUN 2013
SCALE: AS SHOWN

TERMINAL 6

FUEL ISLAND AND CDC ACCESS CONTROLS
ELECTRICAL AND COMMUNICATIONS PLAN

SUBMITTED BY: JAY OSTLUND, PROJECT ENGINEER
TYPE: CD
DRAWING NO.: T6 2013-1 5/11 (E-1)

DRAWING SCALE IS REDUCED 50% WHEN SHEET SIZE IS 11" x 17".

PRINTED: 8/8/2013 1:34:15 PM HAIDN r:\marine\t6\2013\0001\as bids\t6 fuel islands_cdc entrance\dwg\electrical and communication\elec plan.dwg

GRAPHIC SCALE - FOR REFERENCE ONLY

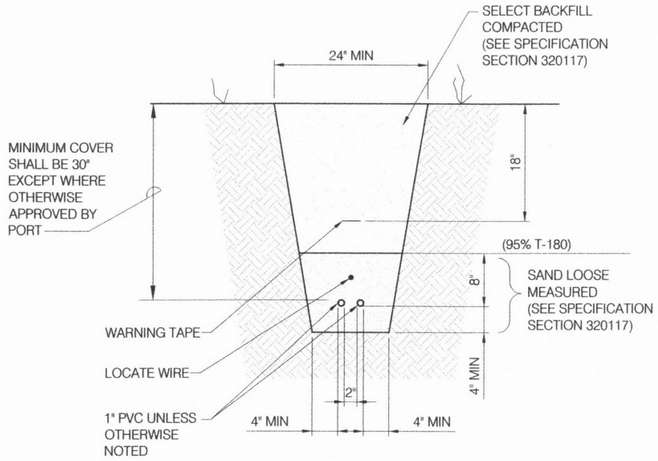

NON-PAVEMENT DIRECT BURIED CONDUITS (1 / E-2)
SCALE: N.T.S.

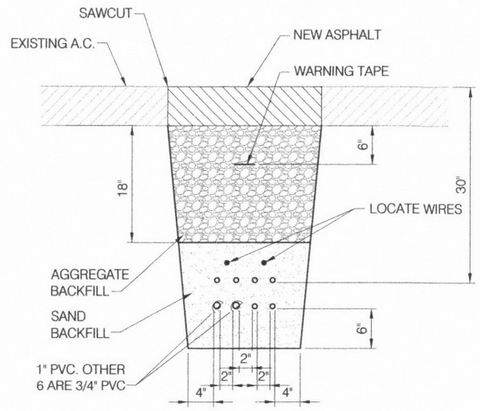

DIRECT BURIED CONDUITS IN PAVEMENT (2 / E-2)
SCALE: N.T.S.

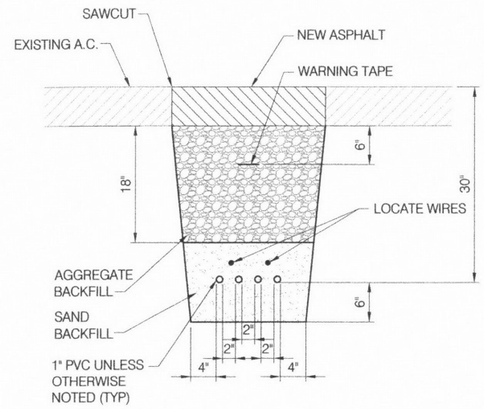

DIRECT BURIED CONDUITS IN PAVEMENT (3 / E-2)
SCALE: N.T.S.

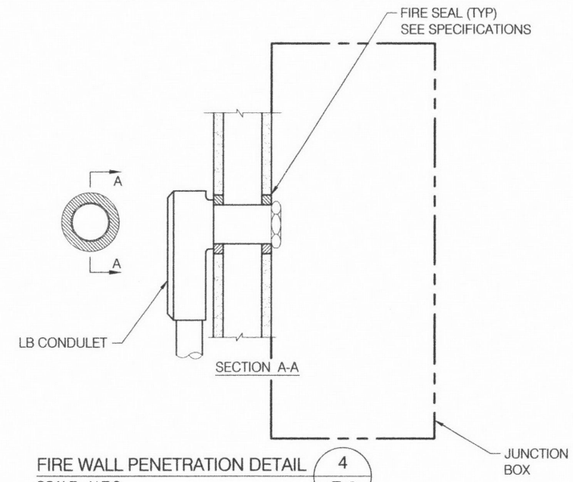

FIRE WALL PENETRATION DETAIL (4 / E-2)
SCALE: N.T.S.

PANEL DESIGNATION: L1
LOCATION (RM): T6 JFW/CDC, BLDG ADDRESS #7515

[X] MIo
[ ] MB
[ ] 3W
[X] 4W

MANUFACTURER:
SC RATING:
MAIN BREAKER: NONE
MAIN BUS RATING: 400 A
VOLTAGE: 480Y/277V
FED FROM: XFMR T6-521 (SEE DWG T6 1998-500 SHT 40)

C	PH	LOAD	P	A	VA	C	PH	LOAD	P	A	VA
1	A	L OFFICE	1	20	1500	2	A	L BATTERY AREA	1	20	2400
3	B	L OFFICE, LUNCH RM	1	20	3400	4	B	CONTROL CKT 3/4 HP FAN	1	20	500
5	C	SPACE	1	20	1000	6	C	WALL HEATER	1	20	3000
7	A	SPACE	1	20	1000	8	A	WALL HEATER	1	20	3000
9	B	L WAREHOUSE	1	20	3000	10	B	L WAREHOUSE	1	20	3000
11	C	L WAREHOUSE	1	20	3000	12	C	L WAREHOUSE	1	20	3000
13	A	L WAREHOUSE - NIGHT	1	20	3000	14	A	L WAREHOUSE	1	20	3000
15	B	L WAREHOUSE	1	20	3000	16	B	L WAREHOUSE	1	20	3000
17	C	L WAREHOUSE	1	20	3000	18	C	L WAREHOUSE	1	20	3000
19	A	L WAREHOUSE	1	20	3000	20	A	L WAREHOUSE	1	20	3000
21	B	L WAREHOUSE	1	20	3000	22	B	L WAREHOUSE	1	20	3000
23	C	L WAREHOUSE	1	20	3000	24	C	L WAREHOUSE	1	20	3000
25	A	L WAREHOUSE	1	20	3000	26	A	PANEL "YL"	3	70	8000
27	B	PANEL "R1"	3	65	12500	28	B	(YARD LIGHTING)	—	70	8000
29	C	—	—	65	12500	30	C	—	—	70	8000
31	A	—	—	65	12500	32	A	*GATE OPERATOR (NEW) **	3	15	583
33	B	*PANEL "R3"	2	100	21000	34	B	—	—	15	583
35	C	(BREAKER MOVED, WAS 32,34)	—	100	21000	36	C	—	—	15	583
37	A	NA				38	A	NA			
39	B	NA				40	B	NA			
41	C	NA				42	C	NA			

CONNECTED LOAD SUMMARY

	TOTAL (VA)	TOTAL (A)	PANEL CAPACITY (A)
Ph A - 43983 VA			
Ph B - 63983 VA	172049	206.9	400
Ph C - 64083 VA			

NOTES:
FROM DWG T6-1975-504 SHT 12
UNVERIFIED
* NEW CIRCUIT CONNECTION
** PROVIDE NEW 15A/3P CIRCUIT BREAKER

EXISTING PANEL SCHEDULE L1 (5 / E-2)
SCALE: N.T.S.

PANEL DESIGNATION: E2P1T6-CDC-EL3
LOCATION (RM): JFW/CDC, BLDG ADDRESS #7515

[ ] MIo
[X] MB
[ ] 3W
[X] 4W

MANUFACTURER:
SC RATING:
MAIN BREAKER: 60A
MAIN BUS RATING: 100A
VOLTAGE: 208Y/120V
FED FROM:

C	PH	LOAD	P	A	VA	C	PH	LOAD	P	A	VA
1	A	SPARE	1	20		2	A	NETWORK CABINET UPS	1	20	1000
3	B	SPARE	1	20		4	B	NETWORK CABINET RECEPT.	1	20	180
5	C	SPARE	1	20		6	C	MULTINODE CABINET POWER	1	20	180
7	A	SPACE				8	A	SPACE			
9	B	SPACE				10	B	SPACE			
11	C	SPACE				12	C	SPACE			
13	A	SPACE				14	A	SPACE			
15	B	SPACE				16	B	SPACE			
17	C	SPACE				18	C	SPACE			
19	A	NA				20	A	NA			
21	B	NA				22	B	NA			
23	C	NA				24	C	NA			
25	A	NA				26	A	NA			
27	B	NA				28	B	NA			
29	C	NA				30	C	NA			
31	A	NA				32	A	NA			
33	B	NA				34	B	NA			
35	C	NA				36	C	NA			
37	A	NA				38	A	NA			
39	B	NA				40	B	NA			
41	C	NA				42	C	NA			

CONNECTED LOAD SUMMARY

	TOTAL (VA)	TOTAL (A)	PANEL CAPACITY (A)
Ph A - 1000 VA			
Ph B - 180 VA	1360	11.3	80
Ph C - 180 VA			

NOTES:

NEW PANEL SCHEDULE E2 (6 / E-2)
SCALE: N.T.S.

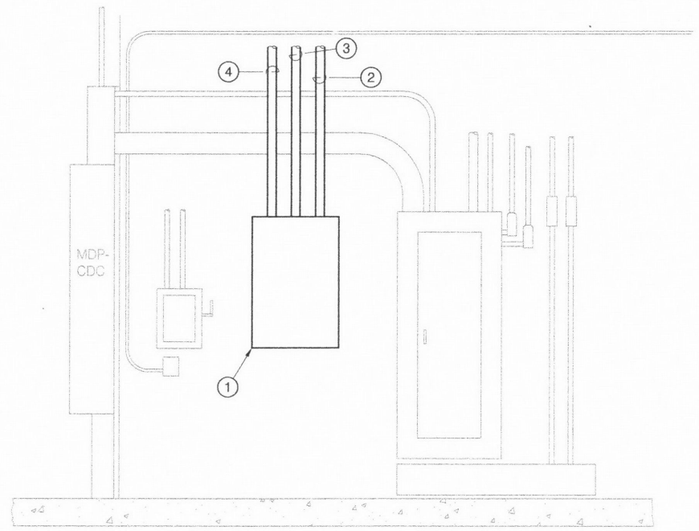

KEY NOTES:

1. NEW PANELBOARD, 208Y/120V, SEE SHEET E-2, DETAIL 6.
2. TO NEW TRANSFORMER (15KVA), 480Δ-208Y/120V TO BE INSTALLED ON MEZZANINE ABOVE, TRANSFORMER TO BE FED FROM EXISTING 480V EMERGENCY ELECTRICAL PANEL. SEE SHEET E-1, DETAIL 4.
3. NEW 3/4" CONDUIT WITH (2) 120V, 20A CIRCUITS TO NEW NETWORK/IT CABINET.
4. NEW 3/4" CONDUIT WITH (1) 120V, 20A CIRCUIT TO NEW MULTINODE CABIINET.

ELEVATION (7 / E-2)
SCALE: N.T.S.

NO.	DATE	BY	REVISIONS	CK'D	APPV'D
1	8/8/13	NRH	AS BID		JO

PORT OF PORTLAND
PORTLAND, OREGON

2013D001 — DESIGN NUMBER
101821 — PROJECT NUMBER

REGISTERED PROFESSIONAL ENGINEER 59,667 OREGON MARCH 9, 1993 DAVID H. POWELL
EXP: 12/31/14

DESIGNED BY: L. KENTNER
DRAWN BY: N. HAID
CHECKED BY: D. POWELL
DATE: JUN 2013
SCALE: AS SHOWN

TERMINAL 6

FUEL ISLAND AND CDC ACCESS CONTROLS
ELECTRICAL DETAILS 1

SUBMITTED BY: JAY OSTLUND — PROJECT ENGINEER
TYPE: CD
DRAWING NO.: T6 2013-1 6/11 (E-2)

PRINTED: 8/8/2013 1:23:57 PM HAIDN r:\marine\t6\2013\0001\as bids\t6 fuel islands_cdc entrance\dwg\electrical and communication\elec details 1.dwg

DRAWING SCALE IS REDUCED 50% WHEN SHEET SIZE IS 11" x 17".

GRAPHIC SCALE - FOR REFERENCE ONLY

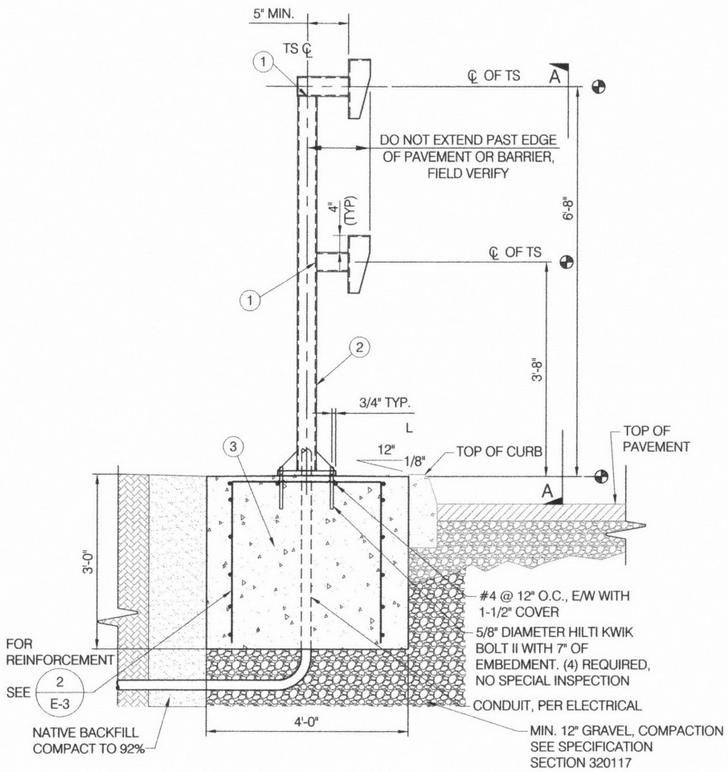

DOUBLE CARD READER MOUNTING DETAIL 1 / E-3

SCALE: N.T.S.

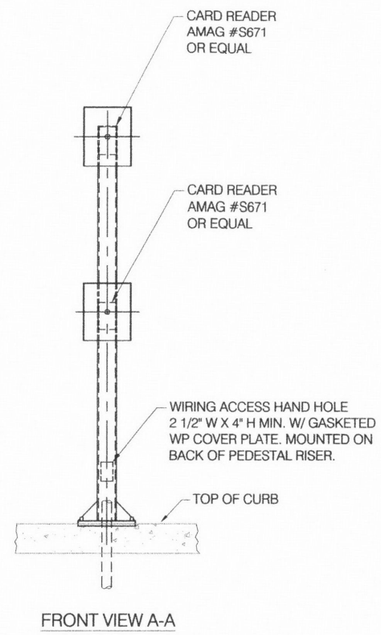

FRONT VIEW A-A

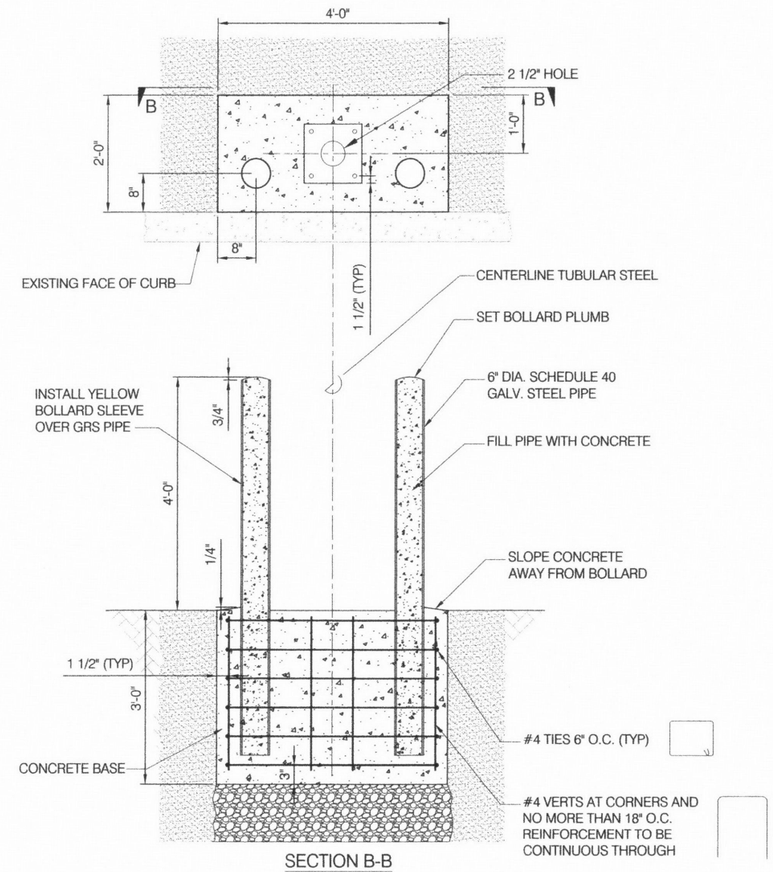

SECTION B-B

BOLLARD PLACEMENT DETAIL 2 / E-3

SCALE: N.T.S.

KEY NOTES:

1. PROVIDE 1" DIAMETER HOLE MAX AND PROTECTIVE GROMMET FOR PULLING CONDUCTORS. COORDINATE WITH ELECTRICAL.
2. CONTRACTOR TO PROVIDE AND INSTALL VIKING VE-GNP-2 GOOSENECK AND VE-5X10 PNL BACKBOX.
3. POUR FOUNDATION MONOLITHIC WITH BOLLARDS. SEE DETAIL 2, SHEET E-3.

NO.	DATE	BY	REVISIONS	CK'D	APP'VD
1	8/8/13	NRH	AS BID		JO

PORT OF PORTLAND
PORTLAND, OREGON

2013D001 — DESIGN NUMBER
101821 — PROJECT NUMBER

REGISTERED PROFESSIONAL ENGINEER 59,667 OREGON MARCH 9, 1999 DAVID H. POWELL
EXP: 12/31/14

DESIGNED BY	L. KENTNER
DRAWN BY	N. HAID
CHECKED BY	D. POWELL
DATE	JUN 2013
SCALE	AS SHOWN

TERMINAL 6

FUEL ISLAND AND CDC ACCESS CONTROLS
ELECTRICAL DETAILS 2

SUBMITTED BY: JAY OSTLUND, PROJECT ENGINEER

TYPE: CD | DRAWING NO.: T6 2013-1 | 7/11 | (E-3)

DRAWING SCALE IS REDUCED 50% WHEN SHEET SIZE IS 11" x 17".

PRINTED: 8/8/2013 1:24:31 PM HAIDN r:\marine\t6\2013\0001\as bids\t6 fuel islands_cdc entrance\dwg\electrical and communication\elec details 2.dwg

GRAPHIC SCALE - FOR REFERENCE ONLY

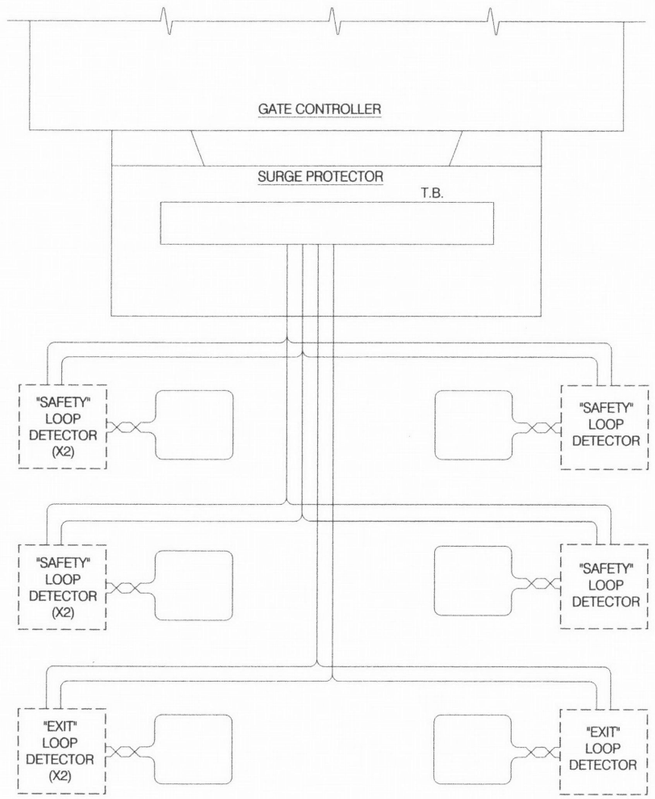

GATE OPERATOR INTERCONNECTION DIAGRAM

SCALE: N.T.S.

1 / E-4

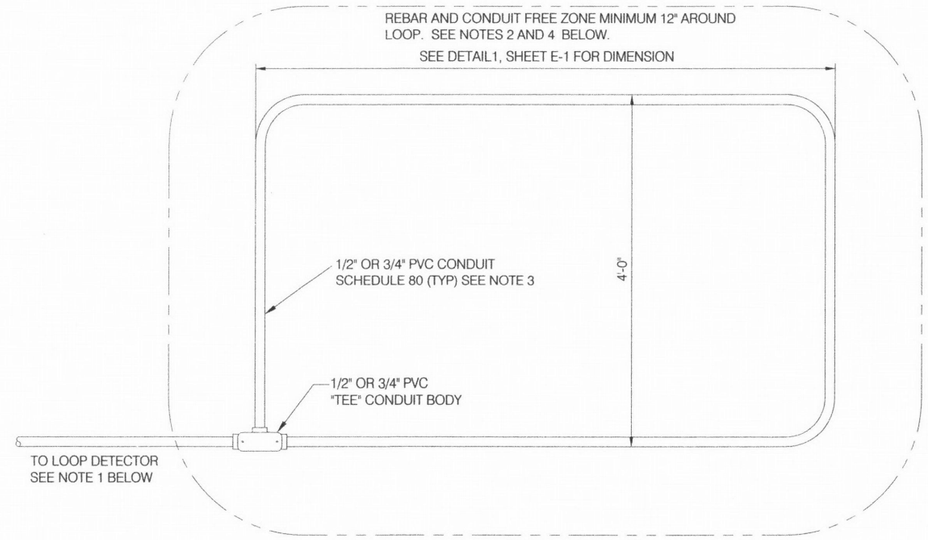

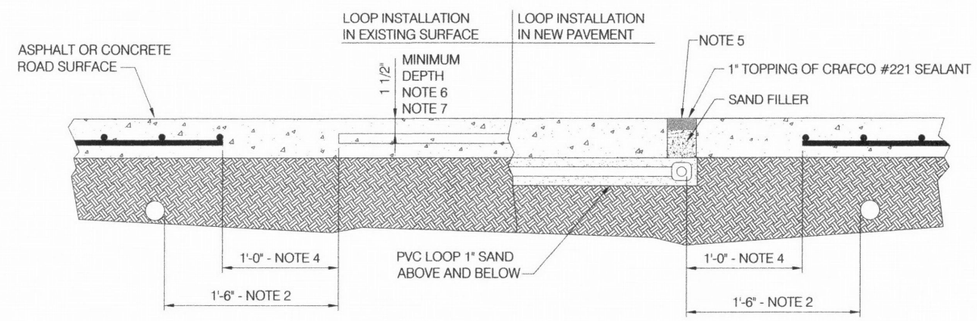

NOTES:

1. PROVIDE 35' OF LOOP LEAD. TWIST AT 12 TURNS PER FOOT. TAPE EVERY 4' BEFORE RELAXING TWIST. DO NOT INSTALL WIRES FOR OTHER SYSTEMS IN LOOP LEAD CONDUITS.
2. CONTROL AND POWER CONDUITS ARE TO BE RUN NO CLOSER THAN 18" TO THE DETECTOR LOOPS.
3. INSTALL 3 TURNS OF #14 XHHW WIRE IN LOOP.
4. DO NOT INSTALL REBAR OR OTHER CONDUCTIVE METAL INSIDE OR WITHIN 1'-0" OF THE LOOP. WIRE MESH MAY BE INSTALLED UNDER THE LOOP FOR STRUCTURAL SUPPORT.

NOTES (CONTINUED):

5. PROVIDE BLOCK OUT ABOVE THE "TEE" FOR ACCESS INTO THE CONDUIT BODY. INSTALL 6" DIA. PVC PIPE SECTION OVER "TEE" OPENING, FILL WITH SAND AND TOP FINAL 1" OF OPENING WITH CRAFCO #221 SEALANT.
6. ROADWAY CUTS SHALL BE STRAIGHT WITH SMOOTH VERTICAL SIDES AND SMOOTH BOTTOM. DO NOT CUT COMPLETELY THROUGH PAVEMENT. REMOVE ALL DEBRIS FROM THE SLOT PRIOR TO INSTALLING CONDUIT. INSTALL CONDUIT A MINIMUM OF 1" BELOW SURFACE TO TOP OF CONDUIT.
7. AFTER ACCEPTANCE OF LOOP INSTALLATION, FILL SLOTS WITH EPOXY GROUT FLUSH WITH PAVEMENT SURFACE. PROTECT EPOXY UNTIL FULL STRENGTH HAS BEEN REACHED.

TYPICAL DETECTOR LOOP INSTALLATION - SECTION

SCALE: N.T.S.

2 / E-4

NO.	DATE	BY	REVISIONS	APPVD	CK'D
1	8/8/13	NRH	AS BID	JO	

PORT OF PORTLAND
PORTLAND, OREGON

2013D001 — DESIGN NUMBER
101821 — PROJECT NUMBER

REGISTERED PROFESSIONAL ENGINEER 59,667 OREGON MARCH 9, 1999 DAVID H. POWELL
EXP: 12/31/14

DESIGNED BY	L. KENTNER
DRAWN BY	N. HAID
CHECKED BY	D. POWELL
DATE	JUN 2013
SCALE	AS SHOWN

TERMINAL 6

FUEL ISLAND AND CDC ACCESS CONTROLS
ELECTRICAL DETAILS 3

SUBMITTED BY: JAY OSTLUND, PROJECT ENGINEER

TYPE: CD | DRAWING NO.: T6 2013-1 | 8/11 | (E-4)

PRINTED: 8/8/2013 1:25:23 PM HAIDN r:\marine\t6\2013\0001\as bids\t6 fuel islands_cdc entrance\dwg\electrical and communication\elec details 3 and 4.dwg

DRAWING SCALE IS **REDUCED 50%** WHEN SHEET SIZE IS 11" x 17".

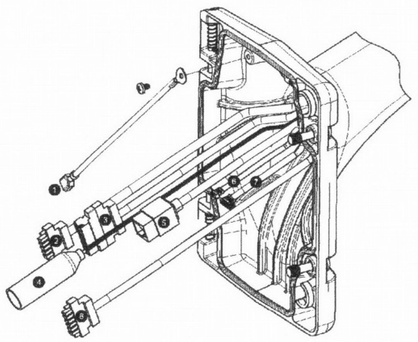

	CABLE		CABLE
1	GROUNDING STRAP (BLACK)	5	UTP VIDEO/ETHERNET (BLUE) (ETHERNET FOR VG5 700 SERIES ONLY)
2	24 VAC POWER (RED)	6	ALARM OUTPUTS (WHITE)
3	RELAY CONTACTS (YELLOW)	7	ALARM INPUTS (GRAY)
4	COAX VIDEO (BLACK)	8	SERIAL COMMUNICATIONS (GREEN)

NOTES:

1. THIS DRAWING REPRESENTS THE POINT TO POINT CONNECTIONS FOR THE CCTV EQUIPMENT SPECIFIED HEREIN ONLY.

PTZ-CAMERA (1/E-5)
SCALE: N.T.S.

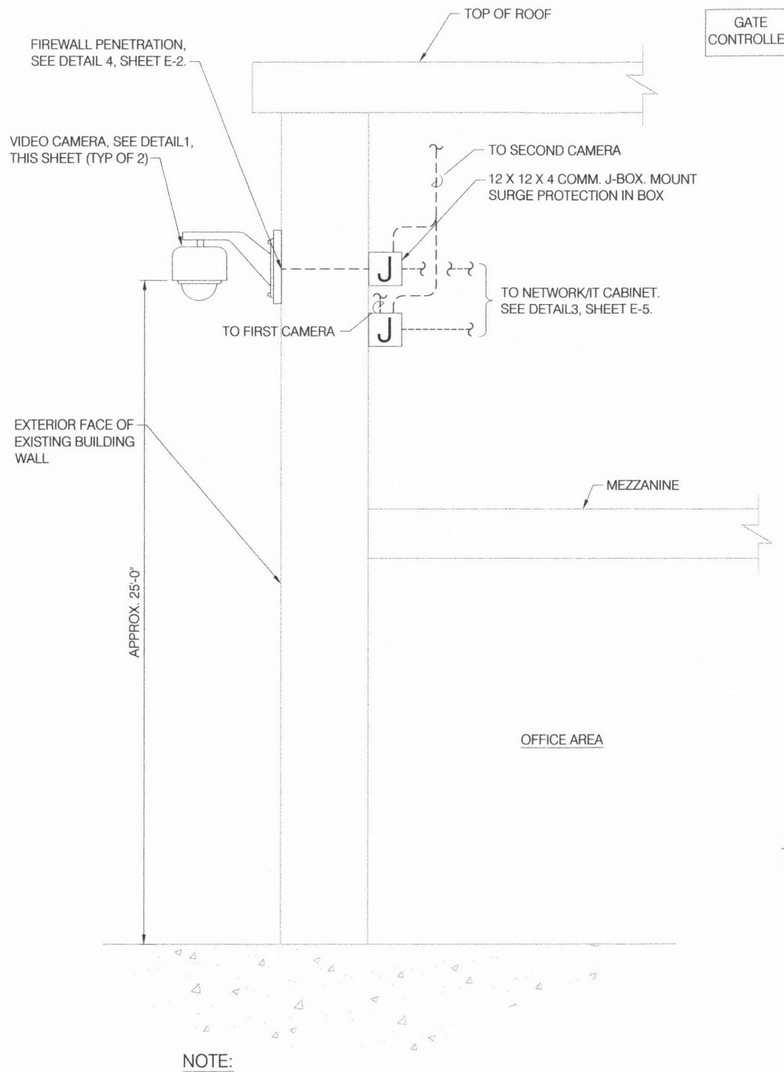

NOTE:

1. ELEVATION SHOWN FOR MOUNTING OF ONE CAMERA. SECOND CAMERA MOUNTING TO BE SIMILAR. SEE LAYOUT PLAN, DETAIL 1, SHEET E-1.

ELEVATION - CAMERA MOUNTING ON EXTERIOR WALL SURFACE (2/E-5)
SCALE: N.T.S.

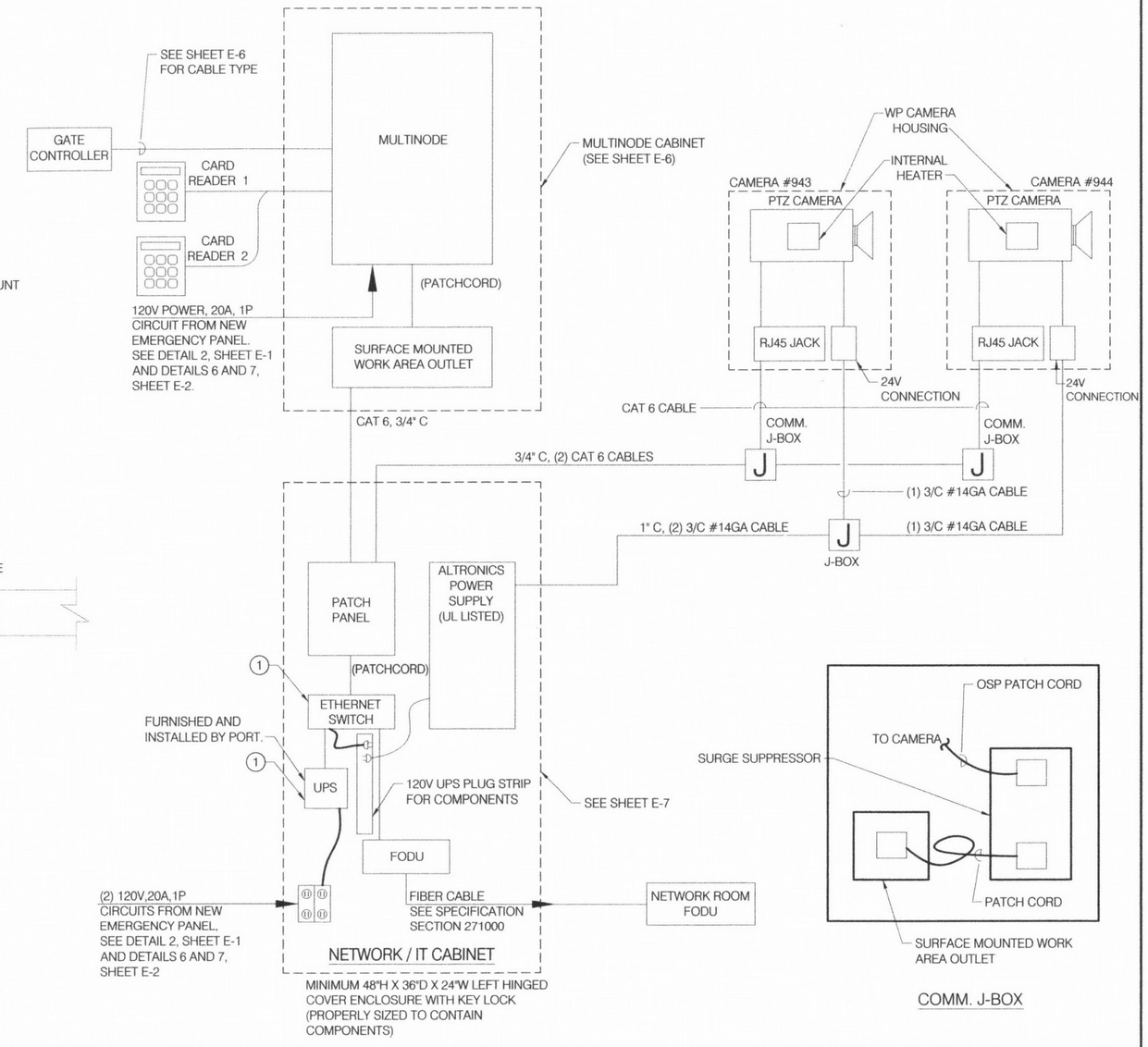

COMM. J-BOX

KEY NOTE:

(1) EQUIPMENT FURNISHED AND INSTALLED BY THE PORT.

ACCESS CONTROL AND CCTV CONNECTION DIAGRAM (3/E-5)
SCALE: N.T.S.

NO.	DATE	BY	REVISIONS	APPVD	CKD
1	8/8/13	NRH	AS BID	JD	

PORT OF PORTLAND
PORTLAND, OREGON

2013D001 (DESIGN NUMBER) | 101821 (PROJECT NUMBER)

REGISTERED PROFESSIONAL ENGINEER 59,667 OREGON MARCH 9, 1989 DAVID H. POWELL
EXP: 12/31/14

DESIGNED BY	L. KENTNER
DRAWN BY	N. HAID
CHECKED BY	D. POWELL
DATE	JUN 2013
SCALE	AS SHOWN

TERMINAL 6

FUEL ISLAND AND CDC ACCESS CONTROLS
ELECTRICAL DETAILS 4

SUBMITTED BY: JAY OSTLUND (PROJECT ENGINEER)
TYPE: CD | DRAWING NO.: T6 2013-1 | 9/11 | (E-5)

PRINTED: 8/8/2013 1:42:58 PM HAIDN r:\marine\t6\2013\0001\t6 fuel islands_cdc entrance\dwg\electrical and communication\elec details 3 and 4.dwg

DRAWING SCALE IS REDUCED 50% WHEN SHEET SIZE IS 11" x 17".

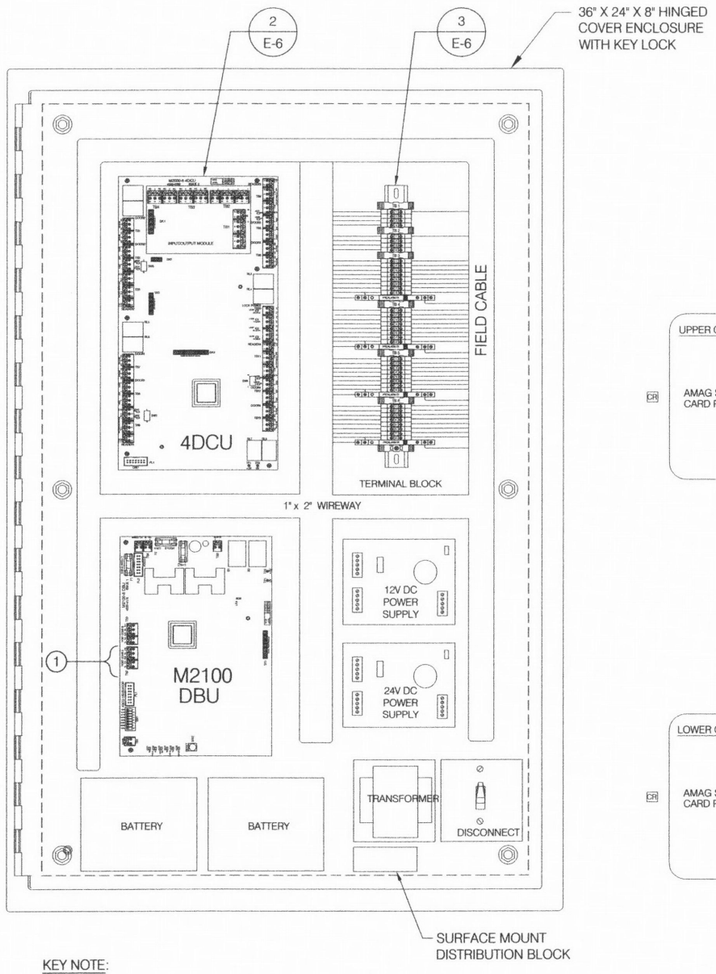

KEY NOTE:

(1) PROVIDE NIC CARD

MULTI-NODE ENCLOSURE LAYOUT — 1 / E-6

SCALE: N.T.S.

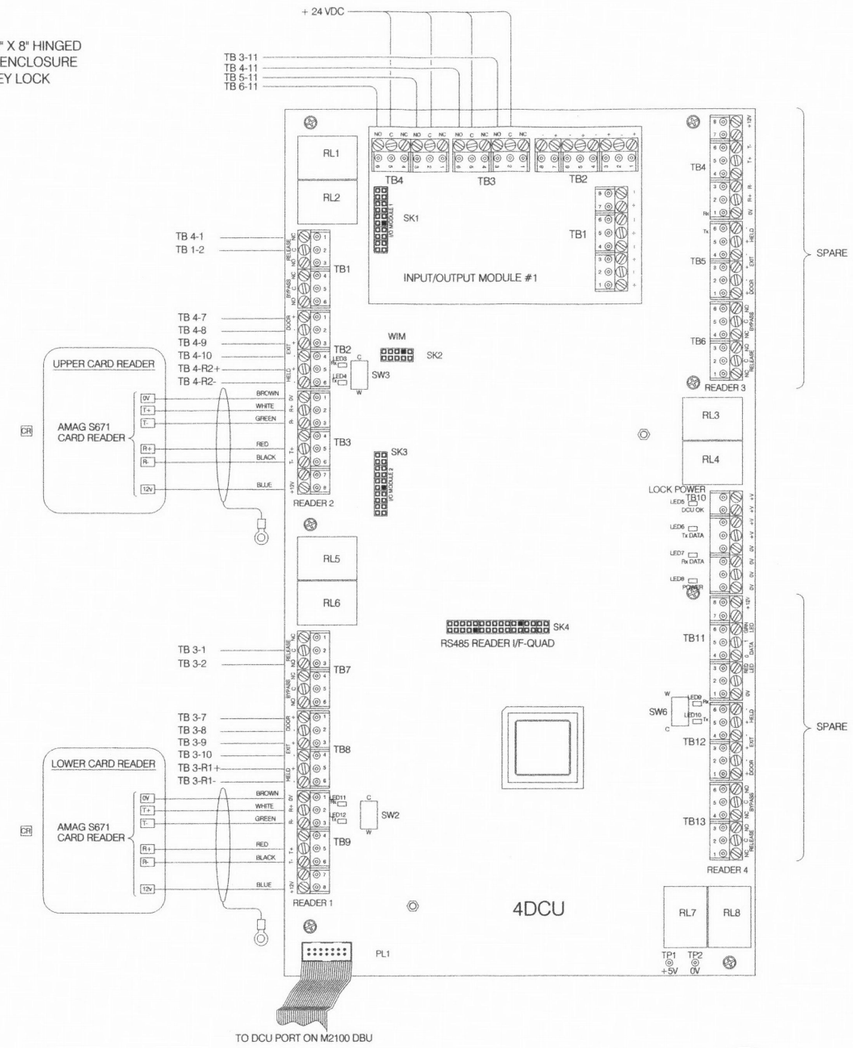

MULTI-NODE CONTROLLER WIRING DIAGRAM — 2 / E-6

SCALE: N.T.S.

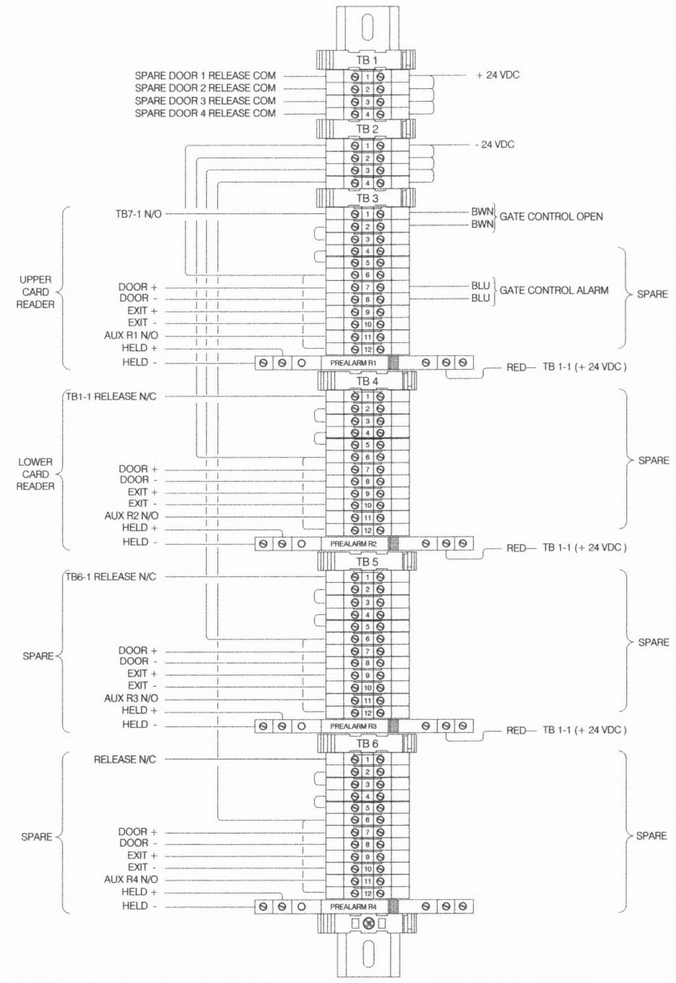

LEGEND	
S - SINGLE DOOR	C - CARD READER
EM - ELECTRO MAGNETIC LOCK	P - PUSH BUTTON
ES - ELECTRIC STRIKE	H - PANIC HARDWARE
E - EMERGENCY PULL STATION	B - CHIME
M - MOTION SENSOR	

MULTI-NODE TERMINAL BLOCK — 3 / E-6

SCALE: N.T.S.

WIRE AND CABLE SCHEDULE

DEVICE	FROM	TO	CABLE TYPE	COLOR	NOTE
CARD READER 1	MULTI-NODE	CARD READER	4 PAIR 23 AWG SHIELDED	MOHAWK VERSALAN CAT 6 CM	READER DATA (EXTERIOR & UNDERGROUND)
CARD READER 2	MULTI-NODE	CARD READER	4 PAIR 23 AWG SHIELDED	MOHAWK VERSALAN CAT 6 CM	READER DATA (EXTERIOR & UNDERGROUND)
MULTI-NODE DATA (INTERIOR)	MULTI-NODE	NETWORK ROOM	(2) CAT 6 CABLES	GREEN	NETWORK COMMUNICATION
GATE CONTROLLER	MULTI-NODE	GATE CONTROLLER	(2) #14 XHHW	BROWN	NETWORK COM (EXTERIOR & UNDERGROUND)
GATE CONTROLLER	MULTI-NODE	GATE CONTROLLER	(2) #14 XHHW	BLUE	(EXTERIOR & UNDERGROUND)

NO.	DATE	BY	REVISIONS	CKD	APPV'D
1	8/8/13	NRH	AS BID		JO

PORT OF PORTLAND
PORTLAND, OREGON

2013D001 — DESIGN NUMBER
101821 — PROJECT NUMBER

REGISTERED PROFESSIONAL ENGINEER 59,667 OREGON MARCH 9, 1999 DAVID H. POWELL
EXP: 12/31/14

DESIGNED BY	L. KENTNER
DRAWN BY	N. HAID
CHECKED BY	D. POWELL
DATE	JUN 2013
SCALE	AS SHOWN

TERMINAL 6

FUEL ISLAND AND CDC ACCESS CONTROLS
ELECTRICAL DETAILS 5

SUBMITTED BY: JAY OSTLUND — PROJECT ENGINEER

TYPE: CD | DRAWING NO.: T6 2013-1 10/11 (E-6)

PRINTED: 8/8/2013 1:26:18 PM HAIDN r:\marine\t6\2013\0001\as bids\t6 fuel islands_cdc entrance\dwg\electrical and communication\elec details 5.dwg

DRAWING SCALE IS **REDUCED 50%** WHEN SHEET SIZE IS 11" x 17".

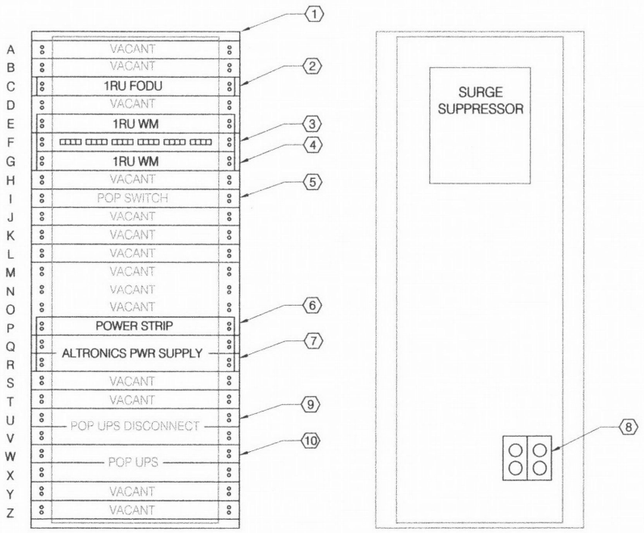

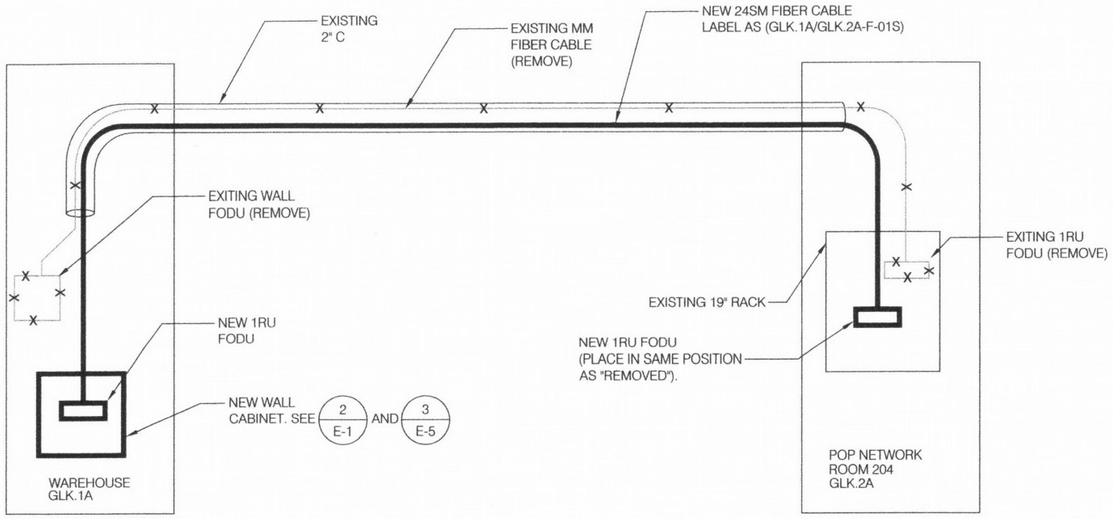

FIBER OPTIC ONE-LINE (2 / E-7)
SCALE: N.T.S.

EQUIPMENT SCHEDULE		
NO.	DESCRIPTION	MFR/PART NUMBER
1	48" WALL CABINET	HUBBEL QUADCAB
2	1RU FODU	CORNING CCH01
3	CAT 6 24 PORT PATCH PANEL	KRONE, 6653-1-677-24
4	1 RU WIRE MGR	SIEMON, 143-5 (TYP.)
5	POP SWITCH	OFOI
6	1 RU HORIZONTAL PWR STRIP	APC
7	POWER SUPPLY	ALTRONICS
8	SURFACE MOUNT FOURPLEX RECEPTACLE	-
9	POP UPS DISCONNECT	OFOI
10	POP UPS	OFOI

WALL CABINET ELEVATION DETAIL (1 / E-7)
SCALE: N.T.S.

WIRE TERMINATION SCHEDULE					
FROM	TO	CABLE ID	RACK NO.	PATCH PANEL NO.	PATCH PANEL PORT NO.
CAMERA 943	WALL CABINET	GLK.1A-A1F01	1	F	01
CAMERA 944	WALL CABINET	GLK.1A-A1F02	1	F	02
MULTINODE	WALL CABINET	GLK.1A-A1F03	1	F	03

WIRE SCHEDULE (3 / E-7)
SCALE: N.T.S.

NO.	DATE	BY	REVISIONS	CK'D	APP'VD
1	8/8/13	NRH	AS BID		JO

PORT OF PORTLAND
PORTLAND, OREGON

2013D001 (DESIGN NUMBER) | 101821 (PROJECT NUMBER)

REGISTERED PROFESSIONAL ENGINEER 59,667 OREGON MARCH 9, 1989 DAVID H. POWELL
EXP: 12/31/14

DESIGNED BY: L. ANDERSON
DRAWN BY: N. HAID
CHECKED BY: D. POWELL
DATE: JUN 2013
SCALE: AS SHOWN

TERMINAL 6

FUEL ISLAND AND CDC ACESS CONTROLS
COMMUNICATIONS DETAILS

SUBMITTED BY: JAY OSTLUND (PROJECT ENGINEER)
TYPE: CD | DRAWING NO.: T6 2013-1 11/11 (E-7)

PRINTED: 8/8/2013 1:26:54 PM HAIDN r:\marine\t6\2013\0001\as bids\t6 fuel islands_cdc entrance\dwg\electrical and communication\comm details 1.dwg

DRAWING SCALE IS REDUCED 50% WHEN SHEET SIZE IS 11" x 17".