GEODESIGN INC

December 5, 2012

Cardno
5415 SW Westgate Drive, Suite 100
Portland, OR 97221

Attention: Mr. Tony Roos

Report of Geotechnical Engineering Services
Ultrablock Retaining Wall Design
Hoffman Construction Campus
8027 NE Killingsworth Street
Portland, Oregon
GeoDesign Project: WRG-104-03

12-156523 REV 02 DR

INTRODUCTION

GeoDesign, Inc. is pleased to submit our Ultrablock retaining wall design report for the Hoffman Construction Campus. GeoDesign previously prepared a letter report[1] discussing field infiltration test results for planned stormwater infiltration basins. Our services included subsurface explorations near the planned wall locations which indicated that the underlying subsurface conditions at the site generally consist of layers of medium dense gravel and medium stiff silt fill.

We understand that three gravity retaining walls will be constructed to support site cuts for the future stormwater basins. Attachment A presents project drawings provided by Cardno that show the planned wall locations and typical cross sections. Our wall design is based on these drawings. The retaining system will be gravity walls consisting of Ultrablock concrete blocks. This report provides a summary of GeoDesign's retaining wall design recommendations for the selected system and can be used to prepare construction drawings. Typical Ultrablock sections and details, which are based on the results of our analyses, are presented in Attachment B along with construction notes. Calculations and results from our analyses are presented in Attachment C.

[1] GeoDesign, Inc., *Report of Geotechnical Engineering Services; Infiltration Testing; Hoffman Construction Campus; 8027 NE Killingsworth; Portland, Oregon,* dated November 2, 2012. GeoDesign project: WRG-104-02

PURPOSE AND SCOPE

The purpose of our services was to provide geotechnical design recommendations for the selected retaining wall system. Our services did not include production of construction drawings. The specific scope of our services is summarized as follows:

- Reviewed and evaluated existing subsurface information and soil parameters.
- Recommended design criteria for the selected retaining walls, including soil strength parameters used to estimate lateral earth pressures, bearing capacity, backfill, compaction, and drainage.
- Evaluated typical sections for the retaining walls to be constructed. Analysis determined the optimum wall geometry and an evaluation of external and internal stability.
- Provided this report, including a calculation package, to be submitted for permit review.

DISCUSSION

WALL GEOMETRY

Our design is based on the wall alignments and sections presented in sheets C3.0, C6.1, and C6.2 of the project drawings prepared by Cardno. The wall heights are expected to range from approximately 2.5 to 7.5 feet. A 3 horizontal to 1 vertical (H:V) slope will be constructed at the toe of the walls and will be approximately 4 to 5 feet long. The backslope will be essentially flat. Our design includes a wall batter of 1H:8V and a minimum toe embedment of 6 inches. The attached typical wall sections (Figure B-1) provide details on recommended wall geometry for varying wall heights. Construction drawings can be prepared based on these sections. As shown, the bottom block will need to be turned perpendicular to the wall alignment to provide a deeper wall base for walls that are 3 blocks high. The contractor should consult Ultrablock technical staff during construction to assist with block arrangement. Blocks should be arranged so that the entire wall interlocks and acts as a whole and not in independent sections.

MATERIAL PARAMETERS

The soil parameters presented in Table 1 were assigned for our analyses. Walls are planned to be cut walls, so the retained soil should consist of undisturbed on-site soil. If caving occurs during wall excavation and backfill is required behind the walls, it should be compacted in accordance with the "Fill Materials" section of this report. If compacted properly, soil strength parameters for backfill material will be equal to or greater than those shown in Table 1.

Table 1. Soil Parameters for Wall Design

Soil Type	Friction Angle (degrees)	Cohesion (psf)	Unit Weight (pcf)
Retained Soil – On-Site Silt and Gravel	33	0	120
Foundation Soil – On-Site Silt and Gravel	33	0	120

pcf: pounds per cubic foot
psf: pounds per square foot

LOADING CONDITIONS

A surcharge pressure of 200 psf was included in design to account for traffic located within the influence zone of the walls. We have not applied hydrostatic pressures in our design because specific drainage details have been included in design. Our design includes pseudo-static horizontal pressures on the walls resulting from seismic activity. The seismic pressures were determined using the Mononabe-Okabe method and a pseudo-static ground acceleration value of 0.29g. The vertical component of seismic acceleration was assumed to be zero.

ANALYSIS METHODS

The computer program UltraWall was used to design the gravity block walls and check for internal wall stability. Analyses were performed on selected wall sections using the soil parameters in Table 1. Local stability results indicated a minimum factor of safety of 1.5 for overturning and 1.13 for sliding under seismic loads and 2.0 for overturning and 1.5 for sliding under static conditions. Global slope stability was analyzed for the tallest (and most critical) wall section using the computer program SLOPEW. Global stability results indicated a minimum factor of safety of 1.13 under seismic conditions and 1.5 under static conditions. A calculation package is provided in Attachment C showing the results of our analyses. SLOPEW output for the global stability is provided in the form of a cross section view with the minimum factor of safety shown.

FILL MATERIALS

All fill material should meet the specifications provided in the most recent edition of the Oregon Standard Specifications for Construction (OSSC) and have a maximum particle size of 4 inches, unless otherwise specified. Fill materials should be approved by GeoDesign before construction begins.

Structural Fill

All fill material placed for wall backfill, within the drainage zone, and for a leveling pad for the blocks should consist of angular crushed rock that meets the specifications provided in OSSC 00510.12 (Granular Wall Backfill). The material should be well-graded between coarse and fine sizes, have a minimum of two fractured faces, and have less than 5 percent finer than the U.S. Standard No. 200 Sieve. If general backfill material fill is required for the walls, it should meet the specifications provided in OSSC 00330 (Earthwork) and be free of organic matter or construction debris. The on-site material will be very difficult to compact during periods of wet weather, or when it is more than 3 percent above optimum moisture content. All fill material should be compacted to a minimum of 95 percent of the maximum dry density, as determined by American Society for Testing and Materials (ASTM) D 1557. However, fill located within a horizontal distance of 3 feet from a retaining wall should only be compacted to approximately 90 percent of the maximum dry density, as determined by ASTM D 1557. Backfill placed within 3 feet of the wall should be compacted in lifts less than 6-inches-thick using hand-operated tamping equipment (such as jumping jack or vibratory plate compactors).

CONSTRUCTION CONSIDERATIONS

The following considerations will have an impact on wall construction and performance:

- A fence is planned along the top of the walls. Figure B-2 shows details for fence/rail post installation.
- A drainpipe should be installed behind the wall as shown in the typical wall section drawings. The drainpipe should be embedded in the drainage zone gravel and routed to a suitable discharge point. As shown in the typical sections, the drainage zone should extend at least 12 inches from the back of the wall and consist of clean, free draining imported material as described in the "Fill Materials" section of this report.
- Ultrablock technical staff should be on site at the start of wall construction to assist with block arrangement at the bottom of the walls.

OBSERVATION OF CONSTRUCTION

Satisfactory retaining wall performance depends to a large degree on quality of construction. Sufficient observation of the contractor's activities is a key part of determining that the work is completed in accordance with the construction drawings and specifications. Recognition of changed conditions often requires experience; therefore, qualified personnel should visit the site with sufficient frequency to detect if subsurface conditions or structural fill quality change significantly from those anticipated.

We recommend that GeoDesign be retained to observe wall construction activities, including stripping, foundation preparation, performing laboratory compaction and field moisture-density tests, confirming the quality of structural fill and verifying proper block placement.

LIMITATIONS

We have prepared this report for use by Hoffman Construction, Cardno, and the design and construction teams for the proposed project. If grading plans or wall locations are changed, we should be contacted to review our design and construction drawings. Substitution of wall materials or changed geometry will not be acceptable unless accompanied by a design package stamped by a professional engineer registered in the state of Oregon.

The scope of our services does not include services related to construction safety precautions, and our recommendations are not intended to direct the contractor's methods, techniques, sequences, or procedures, except as specifically described in our report for consideration in design.

Within the limitations of scope, schedule, and budget, our services have been executed in accordance with generally accepted practices in this area at the time the report was prepared. No warranty, express or implied, should be understood.

♦ ♦ ♦

We appreciate the opportunity to be of continued service to you. Please call if you have questions concerning this report or if we can provide additional services.

Sincerely,

GeoDesign, Inc.

Scott P. McDevitt, P.E., G.E.
Project Engineer

Jeffery D. Tucker, P.E., G.E.
Principal Engineer

REGISTERED PROFESSIONAL ENGINEER
63094
OREGON
July 11, 2000
SCOTT P McDEVITT
EXPIRES: 12/31/12

SPM:JDT:amd
Attachments
One copy submitted (via email only)
Document ID: WRG-104-03-120512-geolr.docx
© 2012 GeoDesign, Inc. All rights reserved.

ATTACHMENT A

APPLICABLE PROJECT PLANS

Sheets C3.0, C6.1, and C6.2 were prepared by Cardno and are provided in this attachment.

ABBREVIATION LEGEND

BW – BOTTOM OF WALL ELEVATION AT FINISH GRADE
TW – TOP OF WALL ELEVATION
R – TOP OF STRUCTURE ELEVATION
S – PROPOSED TOP OF PAVEMENT ELEVATION

EROSION CONTROL NOTES

1. INSTALL INLET PROTECTION. SEE INLET PROTECTION DETAIL ON SHEET CX.X.
2. INSTALL SEDIMENT FENCE. SEE SEDIMENT FENCE DETAIL ON SHEET CX.X.

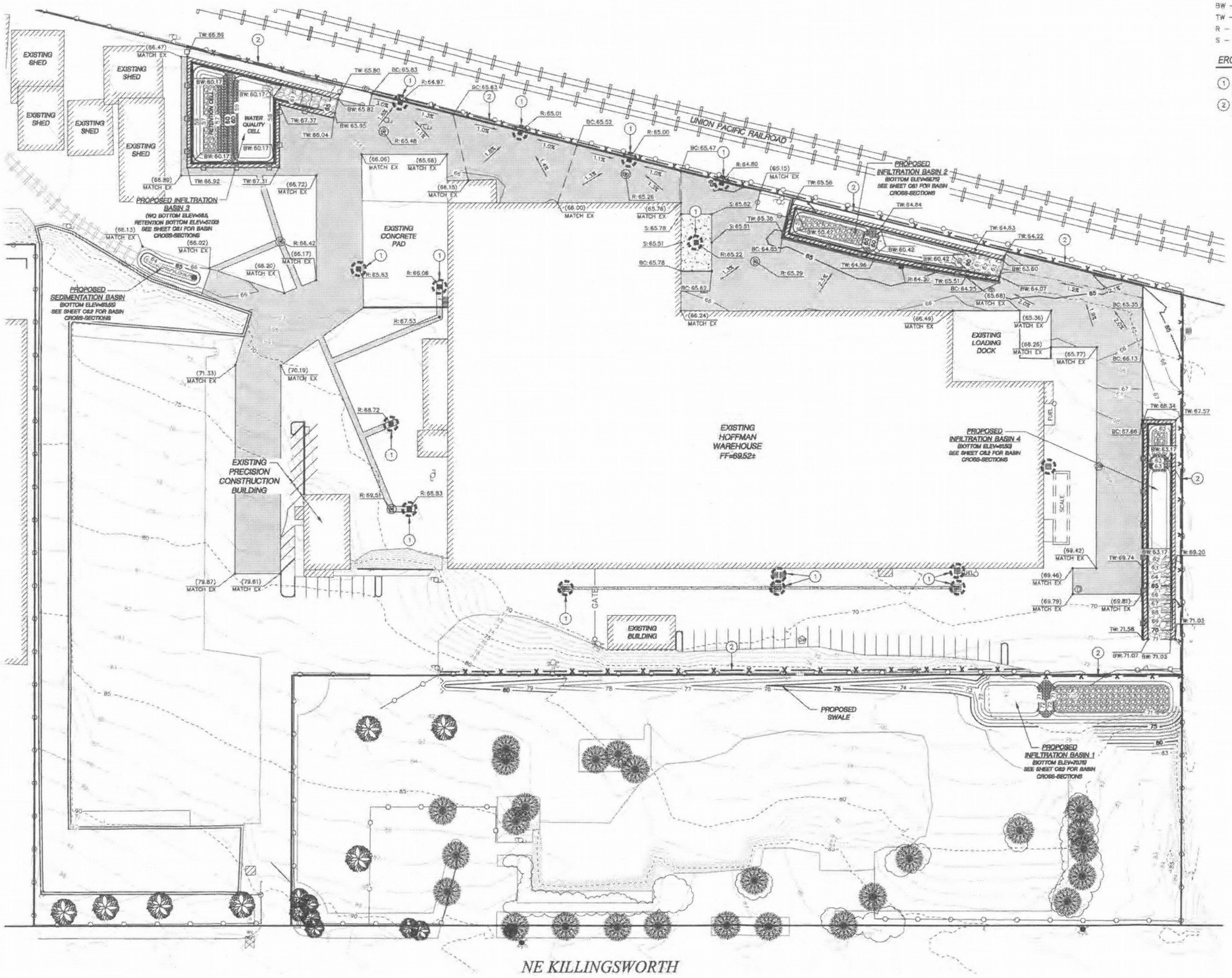

SCALE: 1"=40'
40 20 0 40

90% PLAN SET

Cardno WRG
PORTLAND
5415 SW WESTGATE DR, STE 100, PORTLAND, OR 97221
TEL: (503) 419-2500 FAX: (503) 419-2600
www.cardnowrg.com
PLANNERS • ENGINEERS • LANDSCAPE ARCHITECTS • SURVEYORS

GRADING PLAN
HOFFMAN YARD UIC REMEDIATION
HOFFMAN CONSTRUCTION
PORTLAND, OREGON

#	DATE	DESCRIPTION	BY

REGISTERED PROFESSIONAL ENGINEER
OREGON
CHRIS A. NEGELSPACH
EXPIRES: 12/31/12

DATE	11/09/2012
DRAWN	BCH
DESIGNED	BCH
CHECKED	CAN
PROJECT #	210950101

SHEET TITLE
GRADING PLAN

SHEET NUMBER
C3.0

LAND USE #

ABBREVIATION LEGEND

BW – BOTTOM OF WALL ELEVATION AT FINISH GRADE
TW – TOP OF WALL ELEVATION

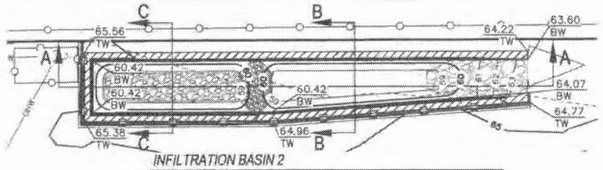

INFILTRATION BASIN 2

SCALE: 1"=30'

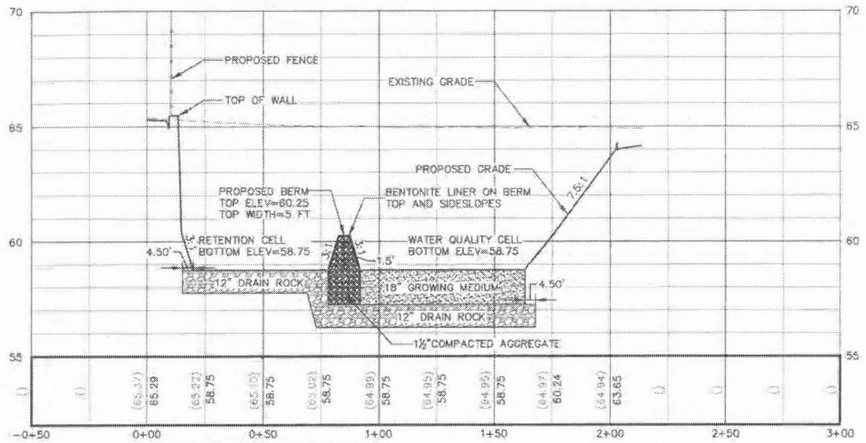

INFILTRATION BASIN 2 - SECTION A-A

SCALE: 1"=30' – HORZ
1"=3' – VERT

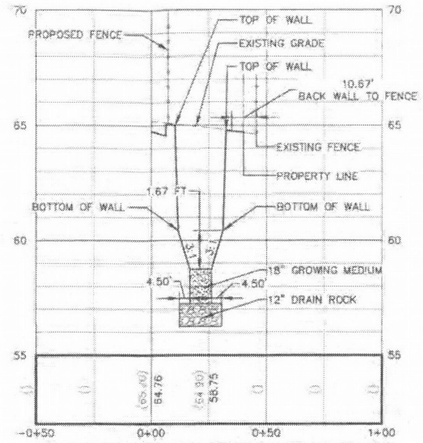

INFILTRATION BASIN 2 - SECTION B-B (WATER QUALITY CELL)

SCALE: 1"=30' – HORZ
1"=3' – VERT

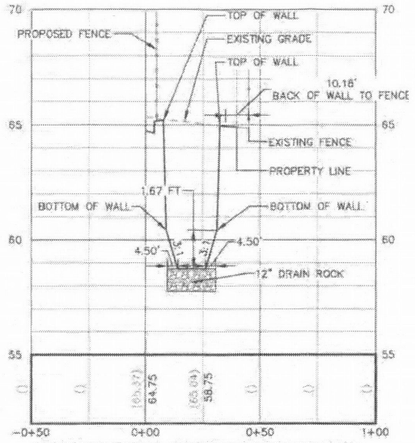

INFILTRATION BASIN 2 - SECTION C-C (RETENTION CELL)

SCALE: 1"=30' – HORZ
1"=3' – VERT

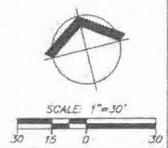

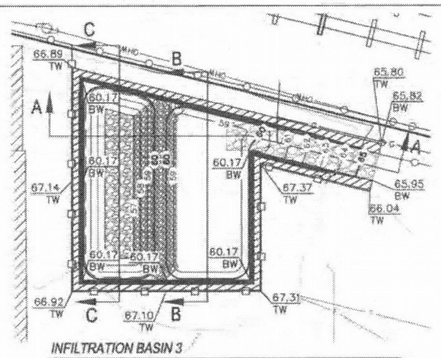

INFILTRATION BASIN 3

SCALE: 1"=30'

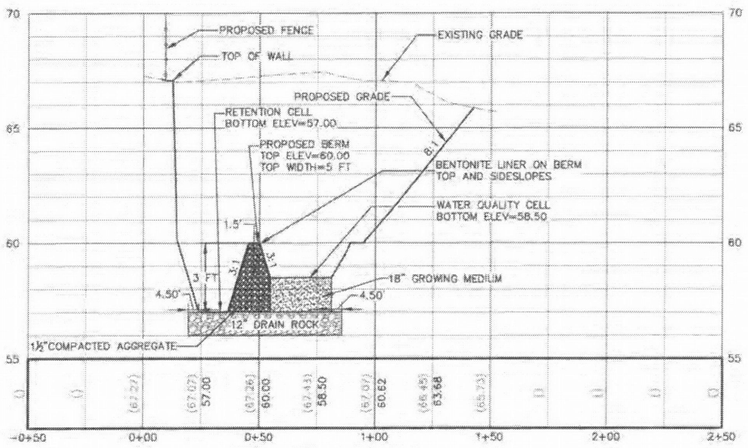

INFILTRATION BASIN 3 - SECTION A-A

SCALE: 1"=30' – HORZ
1"=3' – VERT

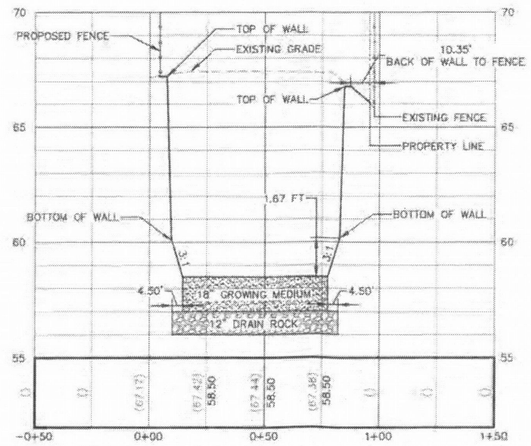

INFILTRATION BASIN 3 - SECTION B-B (WATER QUALITY CELL)

SCALE: 1"=30' – HORZ
1"=3' – VERT

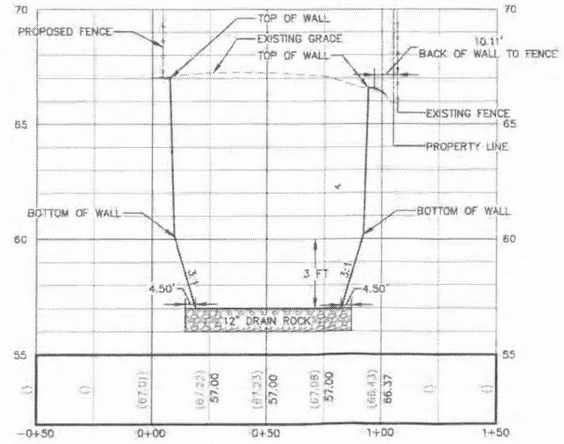

INFILTRATION BASIN 3 - SECTION C-C (RETENTION CELL)

SCALE: 1"=30' – HORZ
1"=3' – VERT

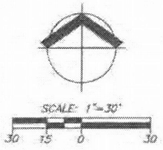

90% PLAN SET

Cardno WRG
PORTLAND
5415 SW WESTGATE DR, STE 100, PORTLAND, OR 97221
TEL (503) 419-2500 FAX (503) 419-2600
WWW.CARDNOWRG.COM
PLANNERS • ENGINEERS • LANDSCAPE ARCHITECTS • SURVEYORS

INFILTRATION BASIN 2 AND 3 CROSS-SECTIONS
HOFFMAN YARD UIC REMEDIATION

HOFFMAN CONSTRUCTION
PORTLAND, OREGON

NO.	DATE	DESCRIPTION	BY

REGISTERED PROFESSIONAL ENGINEER
OREGON
CHRIS A. NEGELSPACH
EXPIRES: 12/31/12

DATE	11/09/2012
DRAWN	BCH
DESIGNED	BCH
CHECKED	CAN
PROJECT #	210550105

SHEET TITLE
BASIN 2 & BASIN 3

SHEET NUMBER
C6.1

LAND USE #

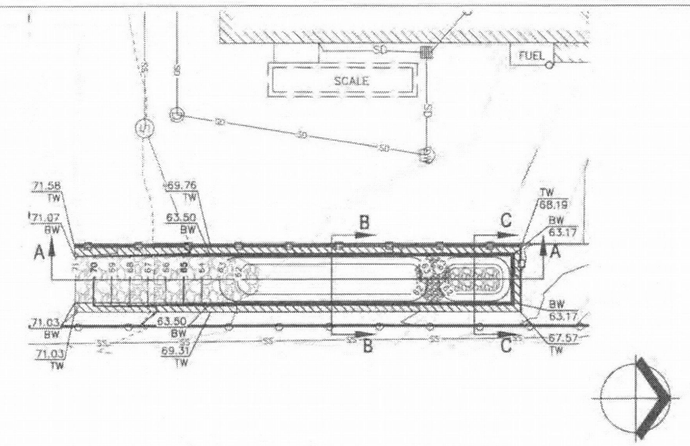

INFILTRATION BASIN 4

SCALE: 1"=30'

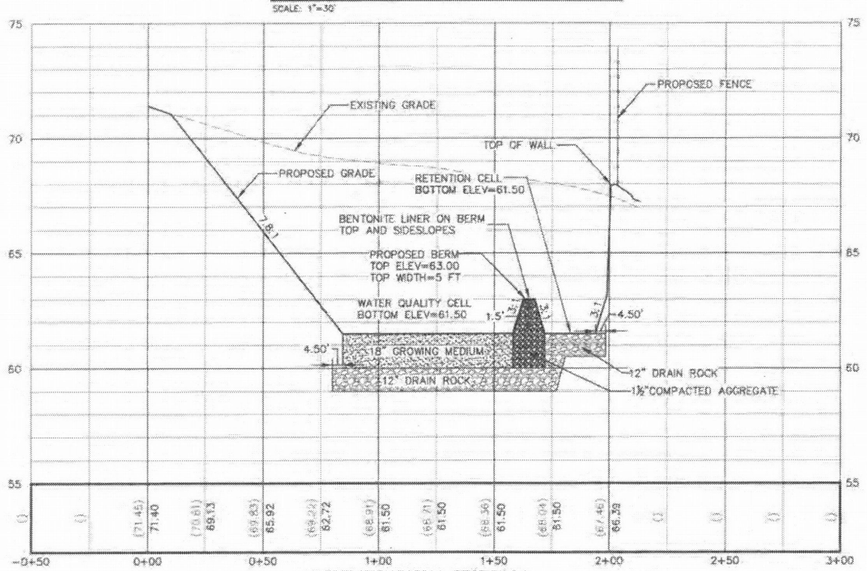

INFILTRATION BASIN 4 - SECTION A-A

SCALE: 1"=30' – HORZ
1"=3' – VERT

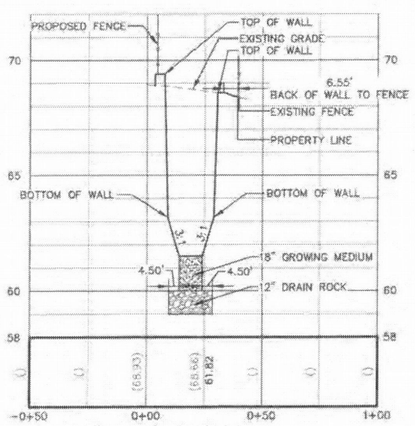

INFILTRATION BASIN 4 - SECTION B-B

SCALE: 1"=30' – HORZ
1"=3' – VERT

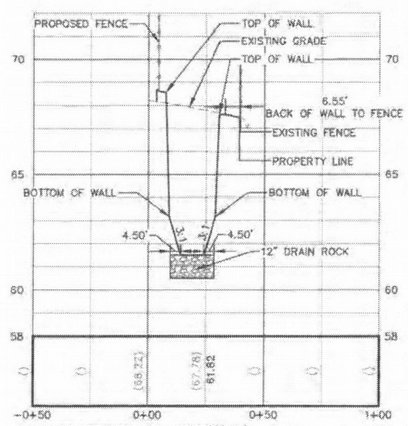

INFILTRATION BASIN 4 - SECTION C-C

SCALE: 1"=30' – HORZ
1"=3' – VERT

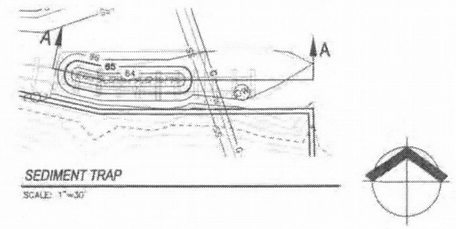

SEDIMENT TRAP

SCALE: 1"=30'

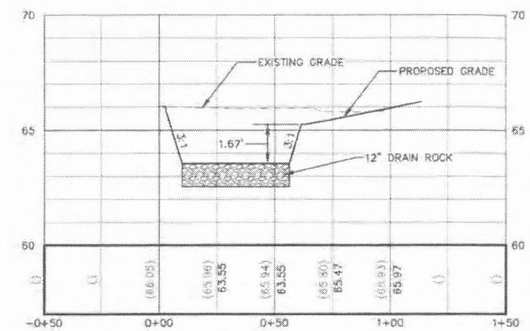

SEDIMENT TRAP - SECTION A-A

SCALE: 1"=30' – HORZ
1"=3' – VERT

ABBREVIATION LEGEND

BW – BOTTOM OF WALL ELEVATION AT FINISH GRADE
TW – TOP OF WALL ELEVATION

SCALE: 1"=30'
30 15 0 30

90% PLAN SET

Cardno WRG
PORTLAND
5415 SW WESTGATE DR, STE 100, PORTLAND, OR 97221
TEL (503) 419-2500 FAX (503) 419-2600
www.cardnowrg.com
PLANNERS • ENGINEERS • LANDSCAPE ARCHITECTS • SURVEYORS

INFILTRATION BASIN 4 & SED TRAP CROSS-SECTIONS
HOFFMAN YARD UIC REMEDIATION
HOFFMAN CONSTRUCTION
PORTLAND, OREGON

NO	DATE	DESCRIPTION	BY

REGISTERED PROFESSIONAL ENGINEER
OREGON
CHRIS A. NEGELSPACH
EXPIRES 12/31/12

DATE	11/02/2012
DRAWN	BCH
DESIGNED	BCH
CHECKED	CAN
PROJECT #	2100551010

SHEET TITLE
BASIN 4 & SED TRAP

SHEET NUMBER
C6.2

LAND USE #

ATTACHMENT B

TYPICAL WALL SECTIONS, DETAILS, AND CONSTRUCTION NOTES

This attachment provides typical wall sections that are based on the results of our analyses. It also includes typical details prepared by Ultrablock and Construction Notes. These documents can be used to prepare project drawings for the walls, or used by the contractor as a guide for wall construction.

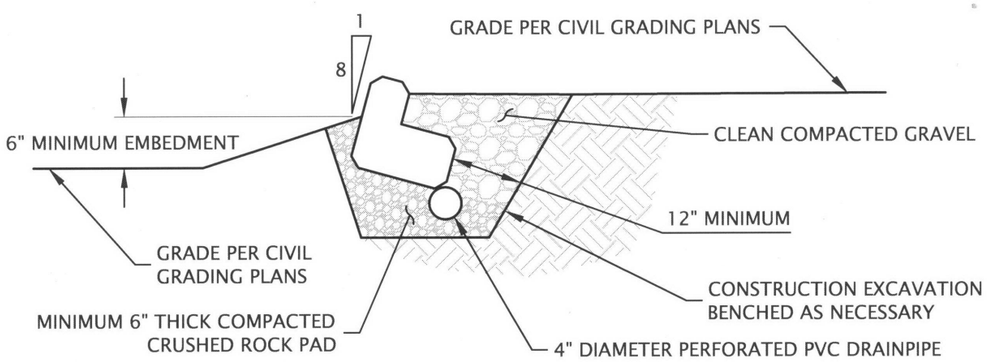

1 / - **1 BLOCK**

NOT TO SCALE

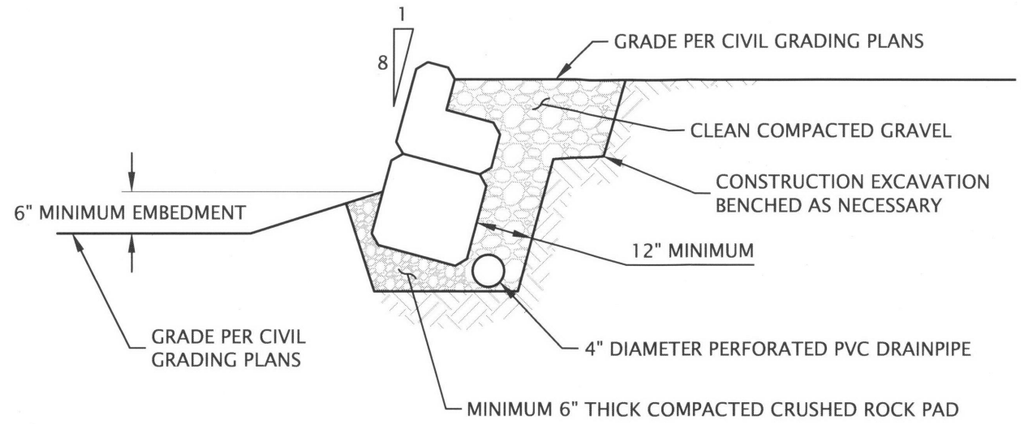

2 / - **2 BLOCKS - 5'**

NOT TO SCALE

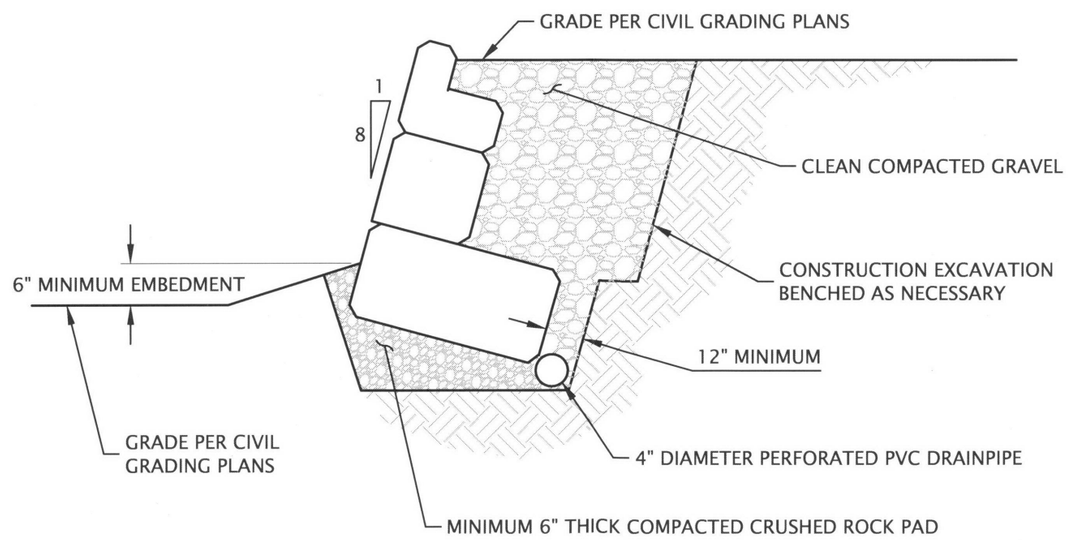

3 / - **3 BLOCKS - 7.5'**

NOT TO SCALE

TYPICAL SECTIONS

HOFFMAN CONSTRUCTION CAMPUS
PORTLAND, OR

FIGURE B-1

WRG-104-03

DECEMBER 2012

GEODESIGN INC
15575 SW Sequoia Parkway - Suite 100
Portland OR 97224
Off 503.968.8787 Fax 503.968.3068

Printed By: mmiller | Print Date: 12/5/2012 10:35:20 AM
File Name: J:\S-Z\WRG\WRG-104\WRG-104-03\Figures\CAD\WRG-104-03-B1.dwg | Layout: FIGURE B-1

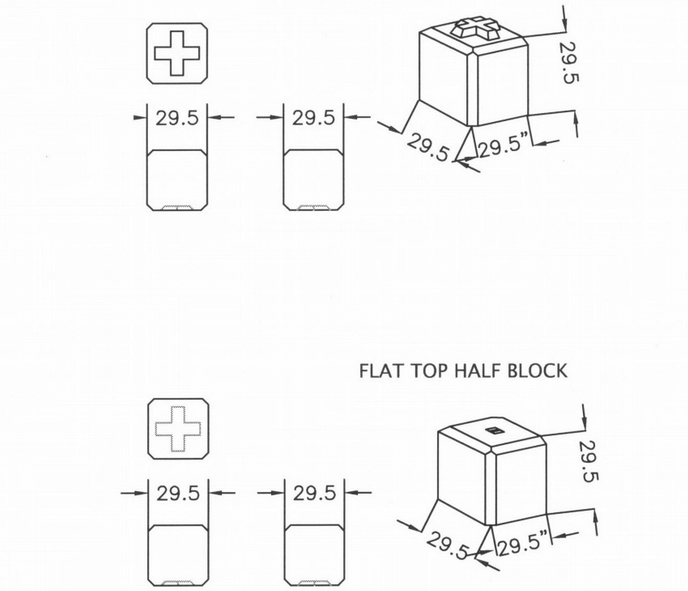

1 - **HALF BLOCK DETAIL**

NOT TO SCALE

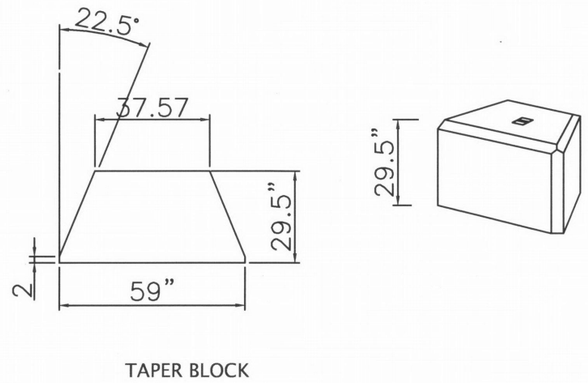

2 - **TAPER BLOCK DETAIL**

NOT TO SCALE

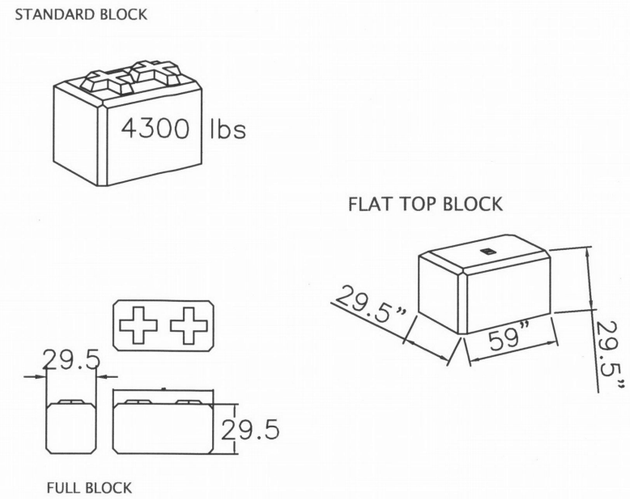

3 - **FULL BLOCK DETAIL**

NOT TO SCALE

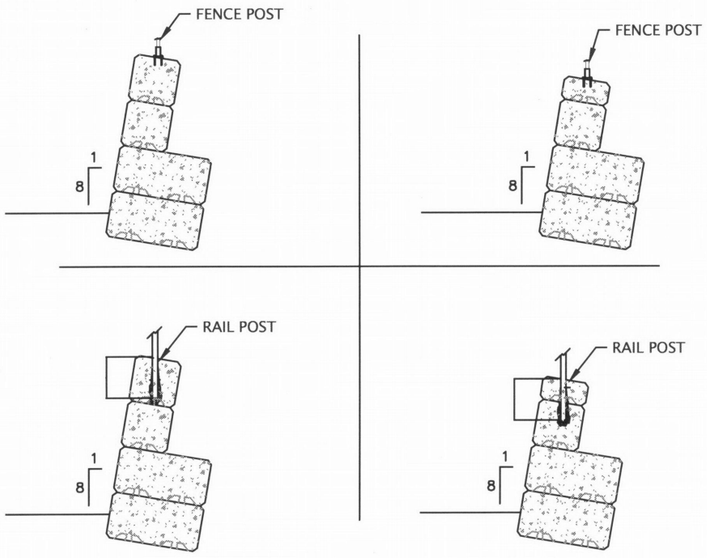

4 - **FENCE POST DETAIL**

NOT TO SCALE

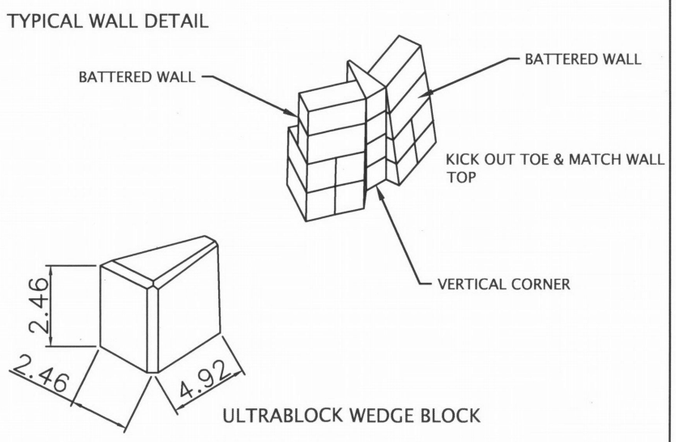

5 - **WEDGE BLOCK DETAIL**

NOT TO SCALE

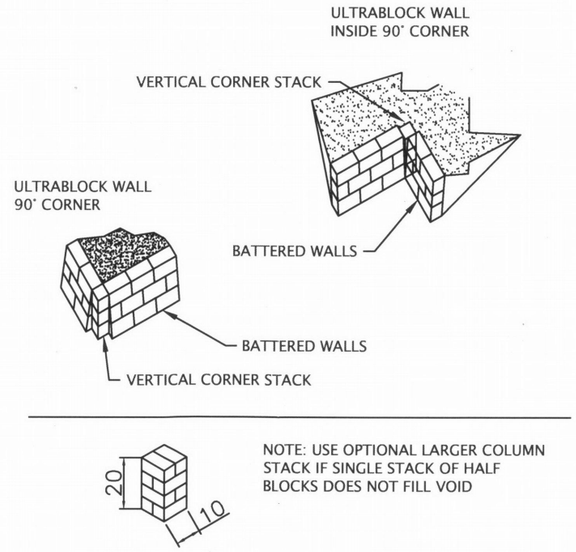

6 - **CORNER STACK DETAIL**

NOT TO SCALE

TYPICAL DETAILS

HOFFMAN CONSTRUCTION CAMPUS
PORTLAND, OR

FIGURE B-2

WRG-104-03

DECEMBER 2012

GEODESIGN INC
15575 SW Sequoia Parkway - Suite 100
Portland OR 97224
Off 503.968.8787 Fax 503.968.3068

Printed By: mmiller | Print Date: 12/5/2012 10:41:44 AM
File Name: J:\S-Z\WRG\WRG-104\WRG-104-03\Figures\CAD\WRG-104-03-B2.dwg | Layout: FIGURE B-2

CONSTRUCTION NOTES FOR GRAVITY BLOCK RETAINING WALLS

GRAVITY BLOCK WALLS

CONTRACTOR
WALL CONSTRUCTION SHALL BE PERFORMED BY A CONTRACTOR HAVING AT LEAST 5 YEARS OF EXPERIENCE BUILDING INTERLOCKING GRAVITY BLOCK RETAINING WALLS.

SITE PREPARATION
STRIP AND PREPARE SITE AS REQUIRED BY PROJECT SPECIFICATIONS.

REMOVE ALL SURFACE VEGETATION, DEBRIS, AND ORGANIC MATERIAL. THIS MATERIAL SHOULD NOT BE USED AS STRUCTURAL BACKFILL (SEE PROJECT SPECIFICATIONS). AS REQUIRED, EXCAVATE SITE SOILS TO ALLOW FOR PLACEMENT OF MODULAR BLOCK WALL UNITS AT SPECIFIED ELEVATIONS.

MATERIALS

FILL SOILS
FILL USED TO CONSTRUCT THE WALL LEVELING PADS AND MATERIAL WITHIN THE 12-INCH DRAINAGE ZONE BEHIND THE WALLS SHALL CONSIST OF FREE-DRAINING 1-1/2-INCH OR 3/4-INCH-MINUS CRUSHED ROCK OR CRUSHED GRAVEL AND SAND CONFORMING TO OREGON STANDARD SPECIFICATIONS FOR CONSTRUCTION (OSSC) SECTION 00510.12 (GRANULAR WALL BACKFILL) MOST RECENT EDITION, WITH THE ADDITION THAT PERCENT PASSING A U.S. STANDARD NO. 200 SIEVE SHALL BE LESS THAN 5 PERCENT BY DRY WEIGHT ACCORDING TO ASTM C 117 AND HAVE A MINIMUM OF TWO MECHANICALLY FRACTURED FACES. GENERAL WALL BACKFILL MATERIAL BEHIND THE DRAINAGE ZONE CAN BE ON-SITE GRANULAR MATERIAL OR IMPORTED GRANULAR MATERIAL AS SPECIFIED IN THE GEOTECHNICAL REPORT AND SHOULD BE APPROVED BY THE PROJECT GEOTECHNICAL ENGINEER BEFORE PLACEMENT.
FINE-GRAINED SILT OR CLAY SOIL WILL NOT BE AN ACCEPTABLE WALL BACKFILL DURING WET WEATHER.

GENERAL NOTES

CONSTRUCT RETAINING WALLS USING PRECAST ULTRABLOCK MODULAR WALL SYSTEM APPROVED BY GEOTECHNICAL ENGINEER. TEXTURE ON EXPOSED FACE SHALL BE PLAIN-FACED CONCRETE FINISH. INSTALL WALL UNITS PER MANUFACTURER'S SPECIFICATIONS. WALL UNITS SHOULD BE INTERLOCKED ALONG THE ENTIRE WALL ALIGNMENT.

CONSTRUCTION METHODS
THE CONSTRUCTION DRAWINGS REPRESENT THE FINISHED STRUCTURE AND ARE NOT INTENDED TO INDICATE OR PRESCRIBE THE METHOD OF CONSTRUCTION. WALLS ARE DESIGNED TO BE STABLE AS COMPLETED WHOLES. ON-SITE SOILS ARE PRONE TO SLOUGHING AND RAVELLING WHEN STEEPLY EXCAVATED OR EXPOSED FOR EXTENDED PERIODS OF TIME. IT IS THE RESPONSIBILITY OF THE CONTRACTOR TO DESIGN, PROVIDE, ERECT, AND INSPECT TEMPORARY SHORING, BRACING, ETC. OR PROVIDE SPECIALIZED CONSTRUCTION MEANS AND METHODS, SUCH AS SEQUENCED CONSTRUCTION TO LIMIT THE LENGTH OF EXPOSED EXCAVATION DURING CONSTRUCTION, AND TO SUPPORT THE STRUCTURE AND/OR EXCAVATION AGAINST ANTICIPATED LOADS, INCLUDING GRAVITY, WIND, AND LATERAL EARTH PRESSURE, UNTIL COMPLETION OF WALL CONSTRUCTION.

THE CONTRACTOR SHALL VERIFY ALL DIMENSIONS, ELEVATIONS, AND SITE CONDITIONS PRIOR TO STARTING CONSTRUCTION. RESOLVE ANY DISCREPANCY WITH THE SITE PROJECT MANAGER.

VERIFY GRADES WITH PROJECT DRAWINGS, GRADING PLANS, AND ACTUAL FIELD SURVEYING. DESIGN DETAILS ARE NOT INTENDED SPECIFICALLY FOR DETERMINING MATERIAL QUANTITIES.

PLACE FILL IN HORIZONTAL LAYERS NOT EXCEEDING 12 INCHES IN UNCOMPACTED THICKNESS FOR HEAVY COMPACTION EQUIPMENT. FOR ZONES WHERE COMPACTION IS ACCOMPLISHED WITH HAND-OPERATED EQUIPMENT, FILL SHALL BE PLACED IN HORIZONTAL LAYERS NOT EXCEEDING 6 INCHES IN UNCOMPACTED THICKNESS.

COMPACT FILL TO AT LEAST 95 PERCENT OF THE MAXIMUM DRY DENSITY IN ACCORDANCE WITH ASTM D 1557 (MODIFIED PROCTOR DENSITY) IN ACCORDANCE WITH PROJECT SPECIFICATIONS.

ALLOW GEOTECHNICAL ENGINEER TO OBSERVE FILL PLACEMENT AND PERFORM COMPACTION TESTING.

MAINTAIN WALL ALIGNMENT AT ALL TIMES DURING CONSTRUCTION.

DESIGN PARAMETS/SUBSTITUTIONS
DESIGN OF THE SITE RETAINING WALLS IS BASED ON SPECIFIC WALL GEOMETRY AND SPECIFIC PROPERTIES OF THE BACKFILL MATERIALS, WALL UNITS, AND SPECIFIC WALL LOADS AS DESCRIBED IN THE DESIGN REPORT. SUBSTITUTION REQUESTS OF PRODUCTS AND MATERIALS WILL ONLY BE REVIEWED BY THE GEOTECHNICAL ENGINEER IF ACCOMPANIED BY PLANS, CALCULATIONS, AND CONSTRUCTION SPECIFICATIONS STAMPED BY A QUALIFIED ENGINEER REGISTERED IN OREGON.

CONSTRUCTION NOTES

FIGURE B-3

HOFFMAN CONSTRUCTION CAMPUS
PORTLAND, OR

WRG-104-03

DECEMBER 2012

GEODESIGN INC
15575 SW Sequoia Parkway - Suite 100
Portland OR 97224
Off 503.968.8787 Fax 503.968.3068

Printed By: mmiller | Print Date: 12/5/2012 1:52:52 PM
File Name: J:\S-Z\WRG\WRG-104\WRG-104-03\Figures\CAD\WRG-104-03-B3.dwg | Layout: FIGURE B-3

ATTACHMENT C

DESIGN CALCULATIONS AND STABILITY RESULTS

Our design calculations and wall stability results are presented in this attachment. Included are copies of the spreadsheet output and the results of our SLOPEW analysis presented as cross sections showing the minimum factor of safety under seismic and static conditions.

Ultrablock, Inc

UltraWall version 3.1.12270

Project:	WRG-104-03
Location:	Portland, OR
Designer:	spm
Date:	12/05/2012
Section:	7.5 ft
Design Method:	NCMA_09_3rd_Ed
Design Unit:	Ultrablock Full Double

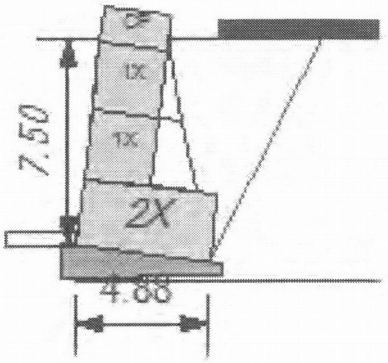

Seismic Acc: 0.290

SOIL PARAMETERS	φ	coh	γ
Retained Soil:	33 deg	0 psf	120 pcf
Foundation Soil:	33 deg	0 psf	120 pcf

Leveling Pad: Concrete

GEOMETRY

Design Height:	7.50 ft	Live Load:	200 psf
Wall Batter/Tilt:	0.00/ 7.00 deg	Live Load Offset:	2.00 ft
Embedment:	0.50 ft	Live Load Width:	8 ft
Leveling Pad Depth:	0.50 ft	Dead Load:	0 psf
Slope Angle:	0.0 deg	Dead Load Offset:	0.0 ft
Slope Length:	0.0 ft	Dead Load Width:	0 ft
Slope Toe Offset:	0.0 ft	Leveling Pad Width:	5.92 ft
Vertical δ on Single Depth		Toe Slope Angle:	18.00
		Toe Slope Length:	4.50
		Toe Slope Bench:	0.00

FACTORS OF SAFETY (Static / Seismic)

Sliding:	1.50 / 1.125	Overturning:	1.50 / 1.125
Bearing:	2.00 / 1.5		

RESULTS (Static / Seismic)

FoS Sliding:	3.03 (fnd) / 2.06	FoS Overturning:	3.61 / 1.80
Bearing:	1073.42 / 1617.63	FoS Bearing:	14.50 / 8.97

Name	Elev.	ka	kae	Pa	Pae	Pir	FSsl	FoS OT	slesFSsl	FoS SeisOT
CP	7.38	0.183	0.322	2	3	67	100.00	100.00	100.00	31.18
1X	4.92	0.209	0.322	104	160	202	100.00	19.32	50.16	3.52
1X	2.46	0.208	0.322	355	551	337	42.55	4.08	20.67	1.56
2X	0.00	0.346	0.484	1364	1904	692	3.07[3.03]	3.61	2.06[1.88]	1.80
Lvl_Pad	-0.50	0.000	0.484	0	626	692	3.03	3.61	1.88	1.80

Note: Calculations are for Preliminary use only and should
not be used for construction without the review of a qualified professional.
Ultrablock, Inc

ULTRABLOCK, INC.

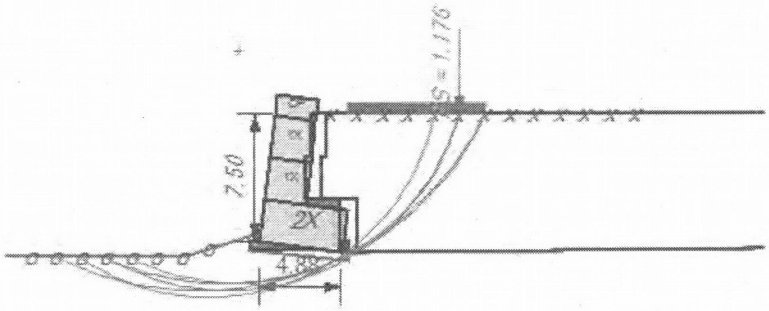

GLOBAL RESULTS

Global stability is a global analysis (Bishop) with the failure planes originating at the top of the slope / wall and existing out below the wall in the area infront of the structure. The resistance of the geogrid reinforcement is included in the analysis. The curve may go through the base of the wall and the wall shear would be included. In most cases the failure plane will pass below the structure.

ID	Enter Point X	Enter Point Y	Exit Point X	Exit Point Y	Center X	Center Y	Radius	FoS
291	11.86	7.50	-7.50	-0.96	-1.29	11.21	13.66	1.176
225	10.36	7.50	-10.50	-0.96	-2.91	10.28	13.56	1.180
431	13.36	7.50	-12.00	-0.96	-3.59	16.07	19.00	1.185
403	13.36	7.50	-9.00	-0.96	-1.99	14.30	16.79	1.187
302	11.86	7.50	-9.00	-0.96	-1.86	11.40	14.27	1.193
327	11.86	7.50	-12.00	-0.96	-3.53	13.03	16.36	1.193
206	10.36	7.50	-7.50	-0.96	-1.19	8.81	11.63	1.211
417	13.36	7.50	-10.50	-0.96	-2.52	14.41	17.32	1.215
315	11.86	7.50	-10.50	-0.96	-2.47	11.60	14.91	1.224
216	10.36	7.50	-9.00	-0.96	-1.84	9.04	12.30	1.230

ULTRABLOCK, INC.

DESIGN DATA

TARGET DESIGN VALUES (Factors of Safety - Static / Seismic)

Minimum Factor of Safety for the sliding along the base	FSsl =1.50 /1.125
Minimum Factor of Safety for overturning about the toe	FSot =1.50 /1.125
Minimum Factor of Safety for bearing (foundation shear failure)	FSbr =2.00 /1.500

MINIMUM DESIGN REQUIREMENTS

Minimum embedment depth	Min_emb =0.50 ft

INPUT DATA

Geometry

Wall Geometry

Design Height, top of leveling pad to finished grade at top of wall	H =7.50 ft
Embedment, measured from top of leveling pad to finished grade	emb =0.50 ft
Leveling Pad Depth	LP Thickeness =0.50 ft
Face Batter, measured from vertical	i =0.00 deg

Slope Geometry

Slope Angle, measured from horizontal	β =0.00 deg
Slope toe offset, measured from back of the face unit	STL_offset =0.00 ft
Slope Length, measured from back of wall facing	SL_Length =0.00 ft

NOTE: If the slope toe is offset or the slope breaks within three times the wall height, a Coulomb Trial Wedge method of analysis is used.

Surcharge Loading

Live Load, assumed transient loading (e.g. traffic)	LL = 200.00 psf
Live Load Offset, measured from back face of wall	LL_offset =2.00 ft
Live Load Width, assumed strip loading	LL_width = 8.00 ft
Dead Load, assumed permanent loading (e.g. buildings)	DL = 0.00 psf
Dead Load Offset, measured from back face of wall	DL_offset =0.00 ft
Dead Load Width, assumed strip loading	DL_width = 0.00 ft

Soil Parameters

Retained Zone

Angle of Internal Friction	φ = 33.00 deg
Cohesion	coh =0.00 psf
Moist Unit Weight	gamma =120.00 pcf

Foundation

Angle of Internal Friction	φ = 33.00 deg
Cohesion	coh =0.00 psf
Moist Unit Weight	gamma =120.00 pcf

ULTRABLOCK, INC.

RETAINING WALL UNITS

STRUCTURAL PROPERTIES:

N is the normal force [or factored normal load] on the base unit
The default leveling pad to base unit shear is 0.8 tan(φ) [AASHTO 10.6.3.4] or may be the manufacturer supplied data. φ is assumed to be 40 degrees for a stone leveling pad.

Unit Designation: Cap
Unit Dimensions:
Height = 1.23 ft
Width = 2.46 ft
Weight = 1039.97 lbs
Depth = 2.46 ft
Density = 140.00 pcf
Unit to Unit Shear
$\tau = N \tan(0.00) + 17796.00$ ppf
Unit to Leveling Pad Shear
$\tau = N \tan(34.00) + 0.00$ ppf

Unit Designation: Full
Unit Dimensions:
Height = 2.46 ft
Width = 2.46 ft
Weight = 2079.94 lbs
Depth = 2.46 ft
Density = 140.00 pcf
Unit to Unit Shear
$\tau = N \tan(0.00) + 17796.00$ ppf
Unit to Leveling Pad Shear
$\tau = N \tan(34.00) + 0.00$ ppf

Unit Designation: Double
Unit Dimensions:
Height = 2.46 ft
Width = 2.46 ft
Weight = 4159.88 lbs
Depth = 4.92 ft
Density = 140.00 pcf
Unit to Unit Shear
$\tau = N \tan(0.00) + 17796.00$ ppf
Unit to Leveling Pad Shear
$\tau = N \tan(34.00) + 0.00$ ppf

ULTRABLOCK, INC.

CALCULATION RESULTS

OVERVIEW

UltraWall calculates stability assuming the wall is a rigid body. Forces and moments are calculated about the base and the front toe of the wall. The base block width is used in the calculations. The concrete units and granular fill over the blocks are used as resisting forces.

EARTH PRESSURES

The method of analysis uses the Coulomb Earth Pressure equation (below) to calculate active earth pressures. Wall friction is assumed to act at the back of the wall face. The component of earth pressure is assumed to act perpendicular to the boundary surface. The effective δ angle is δ minus the wall batter at the back face. If the slope breaks within the failure zone, a trial wedge method of analysis is used.

EXTERNAL EARTH PRESSURES

Effective δ angle (3/4 retained phi)	δ =24.8 deg
Coefficient of active earth pressure	ka =0.346
External failure plane	ρ = 61 deg
Effective Angle from horizontal	Eff. Angle =79.15 deg
Coefficient of passive earth pressure: kp = (1 + sin(φ)) / (1 - sin(φ))	kp =3.39

$$Ka := \frac{\cos(\phi_i + i)^2}{\cos(i)^2 \cdot \cos(\delta_i - i)\left(1 + \sqrt{\frac{\sin(\phi_i + \delta_i)\cdot\sin(\phi_i - \beta)}{\cos(\delta_i - i)\cdot\cos(i + \beta)}}\right)^2}$$

FORCES AND MOMENTS

UltraWall resolves all the geometry into simple geometric shapes to make checking easier. All x and y coordinates are referenced to a zero point at the front toe of the base block.

UNFACTORED LOADS

Name	Factor γ	Force (V)	Force (H)	X-len	Y-len	Mo	Mr
Face Blocks(W1)	1.00	3808	--	2.72	--	--	10355
Soil Wedge(W2)	1.00	538	--	4.11	--	--	2208
LvlPad(W18)	1.00	444	--	2.96	--	--	1313
Pa_h	1.00	--	1109	--	2.91	3223	--
Pa_v	1.00	794	--	5.04	--	--	4002
Pq_h	1.00	--	287	--	4.86	1252	--
Pq_v	1.00	206	--	5.25	--	--	976
Sum V1 / H	1.00	0	0		Sum Mom	0	0

Note: live load forces and moments are not included in SumV or Mr as live loads are not included as resisting forces.

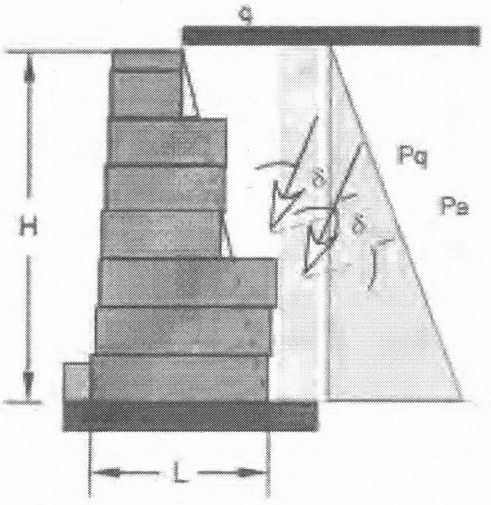

Note: Calculations are for Preliminary use only and should not be used for construction without the review of a qualified professional.

ULTRABLOCK, INC.

OVERTURNING ABOUT THE TOE

Overturning at the base is checked by assuming rotation about the front toe by the block mass and the soil retained on the blocks. Allowable overturning can be defined by eccentricity (e/L). For concrete leveling pads eccentricity is checked at the base of the pad.

Moments resisting eccentricity = M1 + M2 + MLvlPad + MPav + MPqv
10355 + 1313 + 2208 + 4002 + 976 — Mr =17542 ft-lbs

Moments causing eccentricity = MPah + MPq + MPqv
3223 + 1252 — Mo =4476 ft-lbs

e = L/2 - (Mr - Mo)/ N1
e =4.92/2 - (17542 - 4476) /0 — e =0.01
e/L = 0.00

FSot = Mr / Mo
FSot =17542 / 4476 — FSot =3.61

Note: Calculations are for Preliminary use only and should
not be used for construction without the review of a qualified professional.
Ultrablock, Inc

Ultrablock, Inc

UltraWall version 3.1.12270

Project: WRG-104-03
Location: Portland, OR
Designer: spm
Date: 12/05/2012
Section: 5 ft
Design Method: NCMA_09_3rd_Ed
Design Unit: Ultrablock Full Double

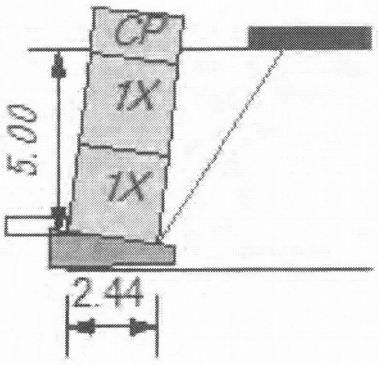

Seismic Acc: 0.290

SOIL PARAMETERS	φ	coh	γ
Retained Soil:	33 deg	0 psf	120 pcf
Foundation Soil:	33 deg	0 psf	120 pcf

Leveling Pad: Concrete

GEOMETRY

Design Height:	5.00 ft	Live Load:	200 psf
Wall Batter/Tilt:	0.00/ 7.00 deg	Live Load Offset:	2.00 ft
Embedment:	0.50 ft	Live Load Width:	8 ft
Leveling Pad Depth:	0.50 ft	Dead Load:	0 psf
Slope Angle:	0.0 deg	Dead Load Offset:	0.0 ft
Slope Length:	0.0 ft	Dead Load Width:	0 ft
Slope Toe Offset:	0.0 ft	Leveling Pad Width:	3.46 ft
Vertical δ on Single Depth		Toe Slope Angle:	18.00
		Toe Slope Length:	4.50
		Toe Slope Bench:	0.00

FACTORS OF SAFETY (Static / Seismic)

Sliding:	1.50 / 1.125	Overturning:	1.50 / 1.125
Bearing:	2.00 / 1.5		

RESULTS (Static / Seismic)

FoS Sliding:	4.01 (lvlpd) / 2.28	FoS Overturning:	4.19 / 1.59
Bearing:	841.61 / 980.27	FoS Bearing:	12.40 / 9.57

Name	Elev.	ka	kae	Pa	Pae	Pir	FSsl	FoS OT	siesFSsl	FoS SeisOT
CP	4.92	0.182	0.322	2	3	67	100.00	100.00	100.00	34.76
1X	2.46	0.209	0.322	101	156	202	100.00	20.19	50.79	3.60
1X	0.00	0.207	0.322	350	542	337	4.01[4.58]	4.19	2.28[2.17]	1.59
Lvl_Pad	-0.50	0.000	0.325	0	239	337	4.58	4.19	2.17	1.59

Note: Calculations are for Preliminary use only and should
not be used for construction without the review of a qualified professional.
Ultrablock, Inc

Ultrablock, Inc

UltraWall version 3.1.12270

Project: WRG-104-03
Location: Portland, OR
Designer: spm
Date: 12/05/2012
Section: 2.5 ft
Design Method: NCMA_09_3rd_Ed
Design Unit: Ultrablock Full Double

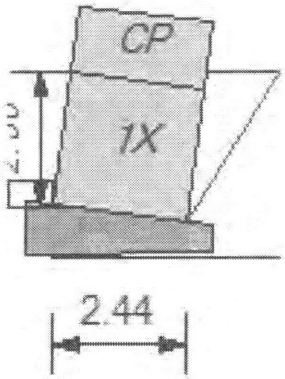

Seismic Acc: 0.290

SOIL PARAMETERS	φ	coh	γ
Retained Soil:	33 deg	0 psf	120 pcf
Foundation Soil:	33 deg	0 psf	120 pcf

Leveling Pad: Concrete

GEOMETRY

Design Height:	2.50 ft	Live Load:	200 psf
Wall Batter/Tilt:	0.00/ 7.00 deg	Live Load Offset:	2.00 ft
Embedment:	0.50 ft	Live Load Width:	8 ft
Leveling Pad Depth:	0.50 ft	Dead Load:	0 psf
Slope Angle:	0.0 deg	Dead Load Offset:	0.0 ft
Slope Length:	0.0 ft	Dead Load Width:	0 ft
Slope Toe Offset:	0.0 ft	Leveling Pad Width:	3.46 ft
Vertical δ on Single Depth		Toe Slope Angle:	18.00
		Toe Slope Length:	4.50
		Toe Slope Bench:	0.00

FACTORS OF SAFETY (Static / Seismic)

Sliding:	1.50 / 1.125	Overturning:	1.50 / 1.125
Bearing:	2.00 / 1.5		

RESULTS (Static / Seismic)

FoS Sliding:	10.56 (lvlpd) / 3.67	FoS Overturning:	21.11 / 3.69
Bearing:	517.64 / 623.41	FoS Bearing:	20.15 / 15.04

Name	Elev.	ka	kae	Pa	Pae	Pir	FSsl	FoS OT	siesFSsl	FoS SeisOT
CP	2.46	0.181	0.322	1	2	67	100.00	100.00	100.00	39.21
1X	0.00	0.209	0.322	98	151	202	10.56[13.64]	21.11	3.67[3.55]	3.69
Lvl_Pad	-0.50	0.000	0.328	0	79	202	13.64	21.11	3.55	3.69

Note: Calculations are for Preliminary use only and should
not be used for construction without the review of a qualified professional.
Ultrablock, Inc

Hoffman Construction Campus
Ultrablock Wall Global Stability (Seismic)

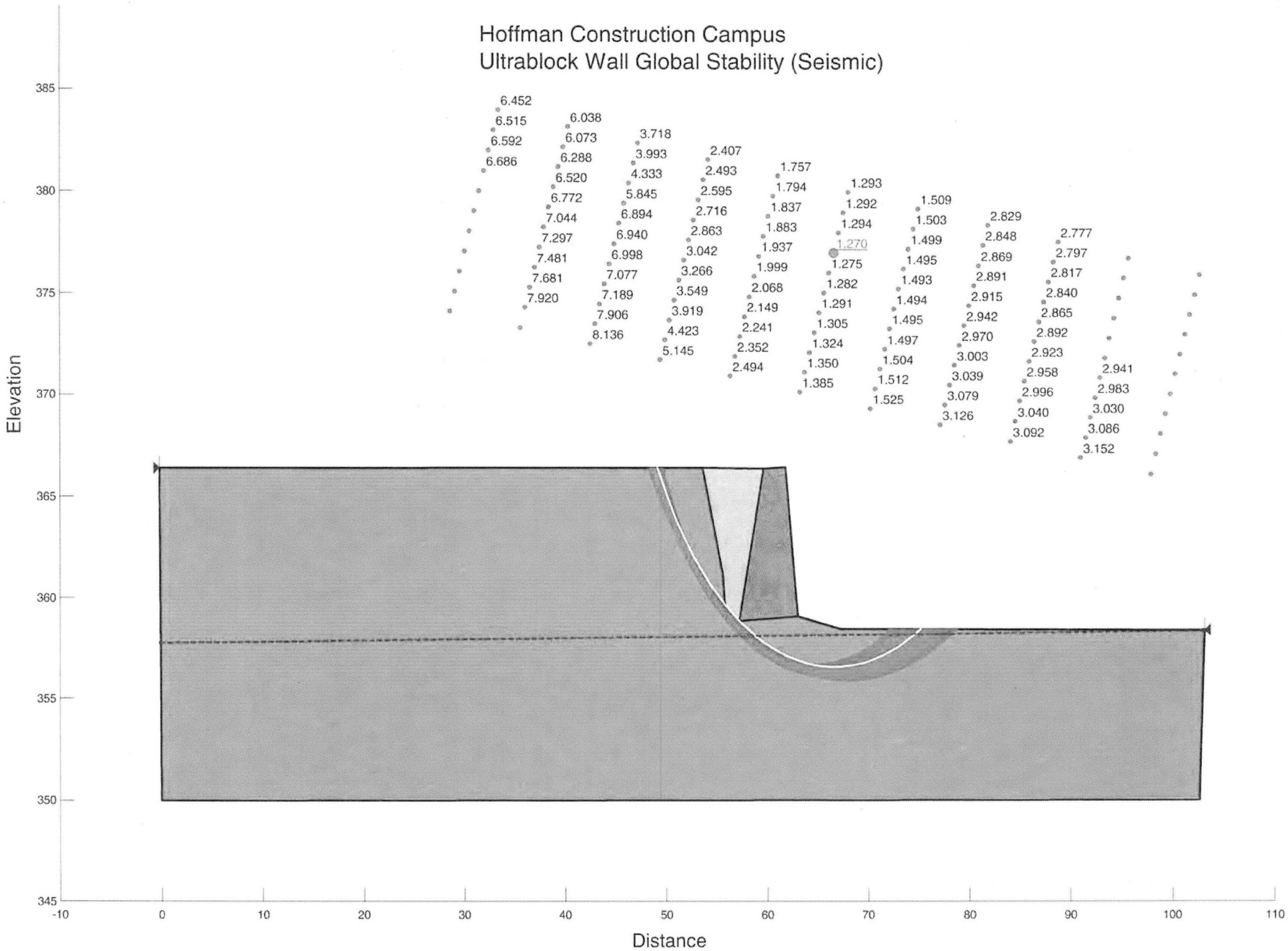

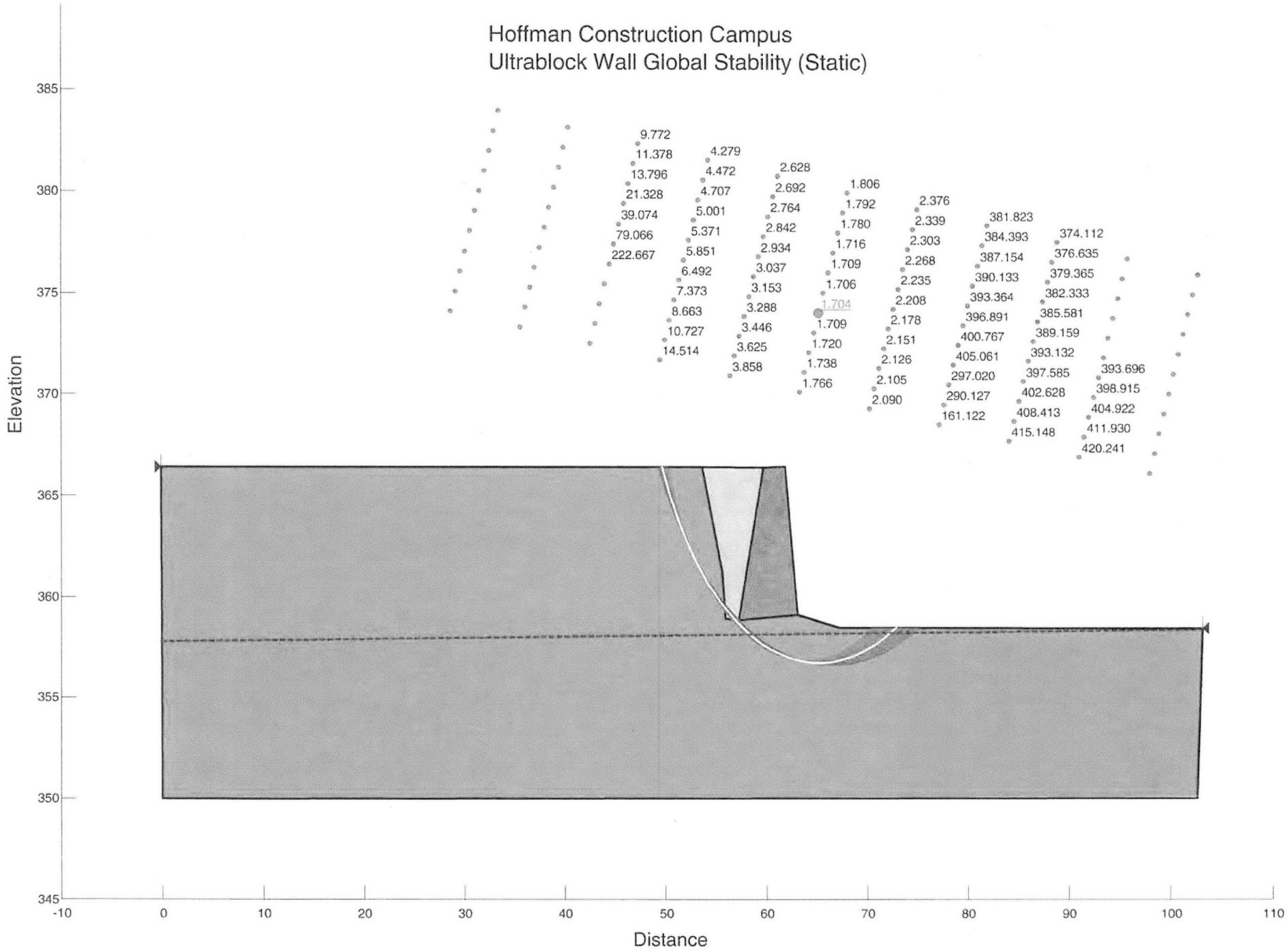
Hoffman Construction Campus
Ultrablock Wall Global Stability (Static)
Elevation
Distance
385
380
375
370
365
360
355
350
345
-10
0
10
20
30
40
50
60
70
80
90
100
110
9.772
11.378
13.796
21.328
39.074
79.066
222.667
4.279
4.472
4.707
5.001
5.371
5.851
6.492
7.373
8.663
10.727
14.514
2.628
2.692
2.764
2.842
2.934
3.037
3.153
3.288
3.446
3.625
3.858
1.806
1.792
1.780
1.716
1.709
1.706
1.704
1.709
1.720
1.738
1.766
2.376
2.339
2.303
2.268
2.235
2.208
2.178
2.151
2.126
2.105
2.090
381.823
384.393
387.154
390.133
393.364
396.891
400.767
405.061
297.020
290.127
161.122
374.112
376.635
379.365
382.333
385.581
389.159
393.132
397.585
402.628
408.413
415.148
393.696
398.915
404.922
411.930
420.241