Permit Revision Application and Submittal Requirements

A Permit Revision is required when there are proposed changes to the project after the permit has been issued. This may arise due to discrepancies between the city-approved permit drawings and actual field conditions, or the customer has changed their mind about an aspect of the project. In all cases, a revision to the existing permit must be submitted, reviewed and approved.

Applicants will provide:

- ☐ A copy of this application
- ☐ Three (3) sets of plans that clearly reflect the proposed change(s).

  Drawings and calculations must be stamped and signed by the Architect and/or the Engineer of Record, if applicable.
- ☐ One (1) copy of the original city approved permit drawings. (NOTE: If your project has an assigned process manager please contact them regarding submittal of the revision).
- ☐ Two (2) sets of calculations, if applicable
- ☐ Inspector's correction notice, if revision is due to an inspection correction
- ☐ Revision fee (paid at time of submittal)

Contact Information:

Contact name Kathy Johnson, Hennebery Eddy Architects

Address 921 SW Washington St., Ste. 250

City Portland **State** OR **Zip Code** 97205

Phone 503.542.1241 **Email** kjohnson@henneberyeddy.com

Value of proposed revision $2500.00 **Issued permit #** 13-100129-000-00-CO

Description of revision Add versalam beam at second floor framing to pick up load from posts in bearing wall at second floor. (E) bearing walls do not align from second to first floor, so post load must be transferred.

Fees:

The Permit Revisions are subject to fees associated with plan review, processing and any increase in project value. Additional fees may apply if adding plumbing fixtures.

The Bureau of Development Services fee schedule is available under the fees tab on the BDS web site at: *www.portlandoregon.gov/bds*. Fees are updated annually on July 1st.

Helpful Information:

Bureau of Development Services
City of Portland, Oregon
1900 SW 4th Avenue, Portland, OR 97201
www.portlandoregon.gov/bds

Submit your plans in person to:
Development Services Center (DSC), First Floor,
Tuesday - Friday:
7:30 am - 12:00 pm

Closed Mondays

Important Telephone Numbers:

BDS main number	503-823-7300
DSC automated information line	503-823-7310
Building code information	503-823-1456
BDS 24 hour inspection request line	503-823-7000
Residential information for one and two family dwelling	503-823-7388
General Permit Processing and Fee Estimate info	503-823-7357
City of Portland TTY	503-823-6868

Project CLARK HOUSE APART.	EQUILIBRIUM ENGINEERS	By FENTON	Sheet # 1/RFI 2
Location PORTLAND, OR		Date 9/23/13	
Client HEA		Revised	Job # 13005
		Date	

2ND FLOOR HEADER FIX, RFI 2

LOADS: $W_D = 15$ PSF

$W_L = 40$ PSF

$P \rightarrow D = 1.16^k$

$L = 2.57^k$

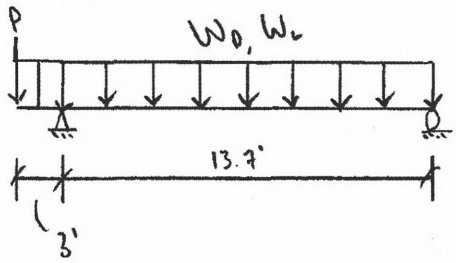

TRY VERSALAM 3100, 7x9.5

STRESS: 42.4% UTILIZATION

$\Delta_{END} = 0.29''$ ∴ OK!

USE 7x9.5 VERSALAM 3100 CANT. BEAM @ 2ND FLOOR

SEE ATTACHED ENERCALC REPORT

REACTIONS →	LEFT	RIGHT
D:	1.63^k	-0.11^k
L:	3.67^k	-0.22^k

POST DESIGN

$P_D = 1.63^k$ HT: 10'

$P_L = 3.67^k$

SEE ATTACHED ENERCALC

USE (3) 2x4 POSTS @ INTERIOR SIDE

SLAB CHECK @ BASEMENT

SEE ATTACHED ENERCALC

(E) 3" SLAB ON GRADE OK!

CHECK POST CRUSHING

$A_c = (3)(1.5'')(3.5'') = 15.75 \text{ IN}^2$

$F'_{c\,DF\text{-}L} = 1{,}350 \text{ PSI}(15.75 \text{ IN}^2) = 21.26 \text{ KIPS}$ ∴ OK!

2/RF12

EQUILIBRIUM ENGINEERS
Justin Fenton
Project Engineer
Equilibrium Engineers LLC
16325 Boones Ferry Rd.
Lake Oswego, Oregon 97035
503.636.8388

Project Title:
Engineer:
Project Descr:
Project ID:

Printed: 23 SEP 2013, 10:09AM

File = C:\Users\JUSTIN~1\DOCUME~1\ENERCA~1\CLARKH~1.EC6
ENERCALC, INC. 1983-2013, Build:6.13.8.31, Ver:6.13.8.31

Wood Beam

Lic. # : KW-06008381 Licensee : EQUILIBRIUM ENGINEERS LLC

Description : Cantilevered Versalam Header

CODE REFERENCES

Calculations per NDS 2005, IBC 2006, CBC 2007, ASCE 7-05
Load Combination Set : IBC 2009

Material Properties

Analysis Method : Allowable Stress Design
Load Combination IBC 2009

Wood Species : Boise Cascade
Wood Grade : Versa Lam 3100

Beam Bracing : Beam is Fully Braced against lateral-torsion buckling

Fb - Tension	3,100.0 psi	*E : Modulus of Elasticity*	
Fb - Compr	3,100.0 psi	Ebend- xx	2,000.0 ksi
Fc - Prll	3,000.0 psi	Eminbend - xx	2,000.0 ksi
Fc - Perp	750.0 psi		
Fv	285.0 psi		
Ft	2,100.0 psi	Density	32.210 pcf

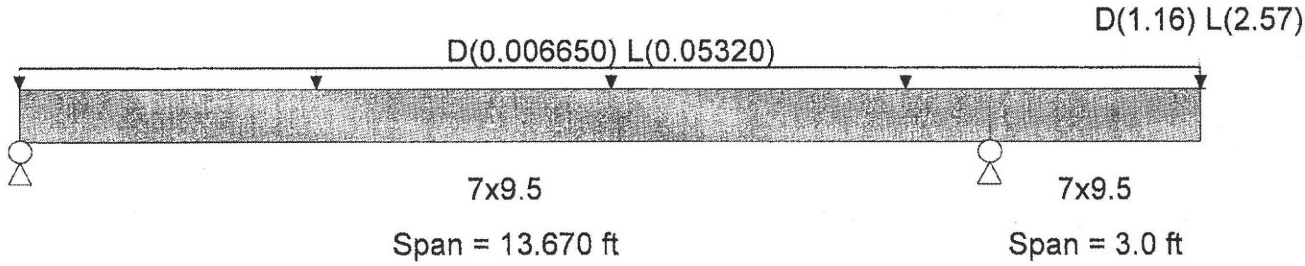

Applied Loads

Service loads entered. Load Factors will be applied for calculations.

Beam self weight calculated and added to loads
Loads on all spans...
Uniform Load on ALL spans : D = 0.0050, L = 0.040 ksf, Tributary Width = 1.330 ft
Load for Span Number 2
Point Load : D = 1.160, L = 2.570 k @ 3.0 ft

DESIGN SUMMARY

Design OK

Maximum Bending Stress Ratio	=	**0.424** : 1	Maximum Shear Stress Ratio	=	**0.308** : 1
Section used for this span		**7x9.5**	Section used for this span		**7x9.5**
fb : Actual	=	1,313.64 psi	fv : Actual	=	87.86 psi
FB : Allowable	=	3,100.00 psi	Fv : Allowable	=	285.00 psi
Load Combination		+D+L+H	Load Combination		+D+L+H
Location of maximum on span	=	13.670 ft	Location of maximum on span	=	13.670 ft
Span # where maximum occurs	=	Span # 1	Span # where maximum occurs	=	Span # 1

Maximum Deflection

Max Downward L+Lr+S Deflection	0.199 in	Ratio =	360
Max Upward L+Lr+S Deflection	-0.125 in	Ratio =	1309
Max Downward Total Deflection	0.290 in	Ratio =	248
Max Upward Total Deflection	-0.183 in	Ratio =	894

Maximum Forces & Stresses for Load Combinations

Load Combination		Max Stress Ratios									Moment Values			Shear Values		
Segment Length	Span #	M	V	C_d	$C_{F/V}$	C_i	C_r	C_m	C_t	C_L	M	fb	F'b	V	fv	F'v
D Only													0.00	0.00	0.00	0.00
Length = 13.670 ft	1	0.132	0.096	1.00	1.00	1.00	1.00	1.00	1.00	1.00	3.58	407.65	3100.00	1.21	27.24	285.00
Length = 3.0 ft	2	0.132	0.096	1.00	1.00	1.00	1.00	1.00	1.00	1.00	3.58	407.65	3100.00	1.21	27.24	285.00
+D+L+H					1.00	1.00	1.00	1.00	1.00	1.00			0.00	0.00	0.00	0.00
Length = 13.670 ft	1	0.424	0.308	1.00	1.00	1.00	1.00	1.00	1.00	1.00	11.53	1,313.64	3100.00	3.90	87.86	285.00
Length = 3.0 ft	2	0.424	0.308	1.00	1.00	1.00	1.00	1.00	1.00	1.00	11.53	1,313.64	3100.00	3.90	87.86	285.00
+D+Lr+H					1.00	1.00	1.00	1.00	1.00	1.00			0.00	0.00	0.00	0.00

3/RFI 2

EQUILIBRIUM ENGINEERS
Justin Fenton
Project Engineer
Equilibrium Engineers LLC
16325 Boones Ferry Rd.
Lake Oswego, Oregon 97035
503.636.8388

Project Title:
Engineer:
Project Descr:

Project ID:

Printed: 23 SEP 2013, 10:09AM

Wood Beam

File = C:\Users\JUSTIN~1\DOCUME~1\ENERCA~1\CLARKH~1.EC6
ENERCALC, INC. 1983-2013, Build:6.13.8.31, Ver:6.13.8.31

Lic. # : KW-06008381 **Licensee : EQUILIBRIUM ENGINEERS LLC**

Description : Cantilevered Versalam Header

Load Combination / Segment Length	Span #	Max Stress Ratios M	Max Stress Ratios V	C_d	C_{FV}	C_i	C_r	C_m	C_t	C_L	Moment Values M	Moment Values fb	Moment Values F'b	Shear Values V	Shear Values fv	Shear Values F'v
Length = 13.670 ft	1	0.132	0.096	1.00	1.00	1.00	1.00	1.00	1.00	1.00	3.58	407.65	3100.00	1.21	27.24	285.00
Length = 3.0 ft	2	0.132	0.096	1.00	1.00	1.00	1.00	1.00	1.00	1.00	3.58	407.65	3100.00	1.21	27.24	285.00
+D+S+H					1.00	1.00	1.00	1.00	1.00	1.00			0.00	0.00	0.00	0.00
Length = 13.670 ft	1	0.132	0.096	1.00	1.00	1.00	1.00	1.00	1.00	1.00	3.58	407.65	3100.00	1.21	27.24	285.00
Length = 3.0 ft	2	0.132	0.096	1.00	1.00	1.00	1.00	1.00	1.00	1.00	3.58	407.65	3100.00	1.21	27.24	285.00
+D+0.750Lr+0.750L+H					1.00	1.00	1.00	1.00	1.00	1.00			0.00	0.00	0.00	0.00
Length = 13.670 ft	1	0.351	0.255	1.00	1.00	1.00	1.00	1.00	1.00	1.00	9.54	1,087.14	3100.00	3.22	72.71	285.00
Length = 3.0 ft	2	0.351	0.255	1.00	1.00	1.00	1.00	1.00	1.00	1.00	9.54	1,087.14	3100.00	3.22	72.71	285.00
+D+0.750L+0.750S+H					1.00	1.00	1.00	1.00	1.00	1.00			0.00	0.00	0.00	0.00
Length = 13.670 ft	1	0.351	0.255	1.00	1.00	1.00	1.00	1.00	1.00	1.00	9.54	1,087.14	3100.00	3.22	72.71	285.00
Length = 3.0 ft	2	0.351	0.255	1.00	1.00	1.00	1.00	1.00	1.00	1.00	9.54	1,087.14	3100.00	3.22	72.71	285.00
+D+W+H					1.00	1.00	1.00	1.00	1.00	1.00			0.00	0.00	0.00	0.00
Length = 13.670 ft	1	0.132	0.096	1.00	1.00	1.00	1.00	1.00	1.00	1.00	3.58	407.65	3100.00	1.21	27.24	285.00
Length = 3.0 ft	2	0.132	0.096	1.00	1.00	1.00	1.00	1.00	1.00	1.00	3.58	407.65	3100.00	1.21	27.24	285.00
+D+0.70E+H					1.00	1.00	1.00	1.00	1.00	1.00			0.00	0.00	0.00	0.00
Length = 13.670 ft	1	0.132	0.096	1.00	1.00	1.00	1.00	1.00	1.00	1.00	3.58	407.65	3100.00	1.21	27.24	285.00
Length = 3.0 ft	2	0.132	0.096	1.00	1.00	1.00	1.00	1.00	1.00	1.00	3.58	407.65	3100.00	1.21	27.24	285.00
+D+0.750Lr+0.750L+0.750W+H					1.00	1.00	1.00	1.00	1.00	1.00			0.00	0.00	0.00	0.00
Length = 13.670 ft	1	0.351	0.255	1.00	1.00	1.00	1.00	1.00	1.00	1.00	9.54	1,087.14	3100.00	3.22	72.71	285.00
Length = 3.0 ft	2	0.351	0.255	1.00	1.00	1.00	1.00	1.00	1.00	1.00	9.54	1,087.14	3100.00	3.22	72.71	285.00
+D+0.750L+0.750S+0.750W+H					1.00	1.00	1.00	1.00	1.00	1.00			0.00	0.00	0.00	0.00
Length = 13.670 ft	1	0.351	0.255	1.00	1.00	1.00	1.00	1.00	1.00	1.00	9.54	1,087.14	3100.00	3.22	72.71	285.00
Length = 3.0 ft	2	0.351	0.255	1.00	1.00	1.00	1.00	1.00	1.00	1.00	9.54	1,087.14	3100.00	3.22	72.71	285.00
+D+0.750Lr+0.750L+0.5250E+H					1.00	1.00	1.00	1.00	1.00	1.00			0.00	0.00	0.00	0.00
Length = 13.670 ft	1	0.351	0.255	1.00	1.00	1.00	1.00	1.00	1.00	1.00	9.54	1,087.14	3100.00	3.22	72.71	285.00
Length = 3.0 ft	2	0.351	0.255	1.00	1.00	1.00	1.00	1.00	1.00	1.00	9.54	1,087.14	3100.00	3.22	72.71	285.00
+D+0.750L+0.750S+0.5250E+H					1.00	1.00	1.00	1.00	1.00	1.00			0.00	0.00	0.00	0.00
Length = 13.670 ft	1	0.351	0.255	1.00	1.00	1.00	1.00	1.00	1.00	1.00	9.54	1,087.14	3100.00	3.22	72.71	285.00
Length = 3.0 ft	2	0.351	0.255	1.00	1.00	1.00	1.00	1.00	1.00	1.00	9.54	1,087.14	3100.00	3.22	72.71	285.00
+0.60D+W+H					1.00	1.00	1.00	1.00	1.00	1.00			0.00	0.00	0.00	0.00
Length = 13.670 ft	1	0.079	0.057	1.00	1.00	1.00	1.00	1.00	1.00	1.00	2.15	244.59	3100.00	0.72	16.34	285.00
Length = 3.0 ft	2	0.079	0.057	1.00	1.00	1.00	1.00	1.00	1.00	1.00	2.15	244.59	3100.00	0.72	16.34	285.00
+0.60D+0.70E+H					1.00	1.00	1.00	1.00	1.00	1.00			0.00	0.00	0.00	0.00
Length = 13.670 ft	1	0.079	0.057	1.00	1.00	1.00	1.00	1.00	1.00	1.00	2.15	244.59	3100.00	0.72	16.34	285.00
Length = 3.0 ft	2	0.079	0.057	1.00	1.00	1.00	1.00	1.00	1.00	1.00	2.15	244.59	3100.00	0.72	16.34	285.00

Overall Maximum Deflections - Unfactored Loads

Load Combination	Span	Max. "-" Defl	Location in Span	Load Combination	Max. "+" Defl	Location in Span
	1	0.0000	0.000	D+L	-0.1835	8.324
D+L	2	0.2900	3.000		0.0000	8.324

Maximum Deflections for Load Combinations - Unfactored Loads

Load Combination	Span	Max. Downward Defl	Location in Span	Max. Upward Defl	Location in Span
D Only	2	0.0909	3.000	0.0000	0.000
L Only	2	0.1991	3.000	0.0000	0.000
D+L	2	0.2900	3.000	0.0000	0.000

Vertical Reactions - Unfactored

Support notation : Far left is #1 Values in KIPS

Load Combination	Support 1	Support 2	Support 3
Overall MAXimum	-0.332	5.308	
D Only	-0.115	1.633	
L Only	-0.218	3.675	
D+L	-0.332	5.308	

4/RFT2

EQUILIBRIUM ENGINEERS
Justin Fenton
Project Engineer
Equilibrium Engineers LLC
16325 Boones Ferry Rd.
Lake Oswego, Oregon 97035
503.636.8388

Project Title:
Engineer:
Project Descr:
Project ID:

Printed: 23 SEP 2013, 10:27AM

Wood Column

File = C:\Users\JUSTIN~1\DOCUME~1\ENERCA~1\CLARKH~1.EC6
ENERCALC, INC. 1983-2013, Build:6.13.8.31, Ver:6.13.8.31

Lic. # : KW-06008381 **Licensee : EQUILIBRIUM ENGINEERS LLC**

Description : (N) Post @ (N) Versalam Header @ 2nd floor

Code References

Calculations per 2005 NDS, IBC 2006, CBC 2007, ASCE 7-05
Load Combinations Used : IBC 2009

General Information

Analysis Method : Allowable Stress Design
End Fixities Top & Bottom Pinned
Overall Column Height 10.0 ft
(Used for non-slender calculations)

Wood Species Douglas Fir - Larch
Wood Grade No.2

Fb - Tension	900.0 psi	Fv	180.0 psi
Fb - Compr	900.0 psi	Ft	575.0 psi
Fc - Prll	1,350.0 psi	Density	32.210 pcf
Fc - Perp	625.0 psi		

E : Modulus of Elasticity . . .	x-x Bending	y-y Bending	Axial
Basic	1,600.0	1,600.0	1,600.0 ksi
Minimum	580.0	580.0	

Wood Section Name **3-2x4**
Wood Grading/Manuf. Graded Lumber
Wood Member Type Sawn

Exact Width	**4.50**	in
Exact Depth	**3.50**	in
Area	15.750	in^2
Ix	16.078	in^4
Iy	26.578	in^4

Allow Stress Modification Factors

Cf or Cv for Bending	1.50
Cf or Cv for Compression	1.150
Cf or Cv for Tension	1.50
Cm : Wet Use Factor	1.0
Ct : Temperature Factor	1.0
Cfu : Flat Use Factor	1.0
Kf : Built-up columns	1.0 *NDS 15.3.2*
Use Cr : Repetitive ?	No *(non-gib only)*

Brace condition for deflection (buckling) along columns :
X-X (width) axis : Fully braced against buckling along X-X Axis
Y-Y (depth) axis : Unbraced Length for X-X Axis buckling = 10.0 ft, K = 1.0

Applied Loads

Service loads entered. Load Factors will be applied for calculations.

Column self weight included : 35.230 lbs * Dead Load Factor
AXIAL LOADS . . .
Post Reaction: Axial Load at 10.0 ft, D = 1.630, L = 3.670 k

DESIGN SUMMARY

Bending & Shear Check Results

PASS Max. Axial+Bending Stress Ratio = **0.8895 : 1**

Load Combination	+D+L+H
Governing NDS Forumla	Comp Only, fc/Fc'
Location of max.above base	0.0 ft
At maximum location values are . . .	
Applied Axial	5.335 k
Applied Mx	0.0 k-ft
Applied My	0.0 k-ft
Fc : Allowable	380.822 psi

PASS Maximum Shear Stress Ratio = **0.0 : 1**

Load Combination	+0.60D+0.70E+H
Location of max.above base	10.0 ft
Applied Design Shear	0.0 psi
Allowable Shear	180.0 psi

Maximum SERVICE Lateral Load Reactions . .

Top along Y-Y	0.0 k	Bottom along Y-Y	0.0 k
Top along X-X	0.0 k	Bottom along X-X	0.0 k

Maximum SERVICE Load Lateral Deflections . . .

Along Y-Y 0.0 in at 0.0 ft above base
for load combination : n/a
Along X-X 0.0 in at 0.0 ft above base
for load combination : n/a

Other Factors used to calculate allowable stresses . . .

	Bending	Compression	Tension
Cf or Cv : Size based factors	1.500	1.150	

Maximum Deflections for Load Combinations - Unfactored Loads

Load Combination	Max. X-X Deflection	Distance	Max. Y-Y Deflection	Distance
D Only	0.0000 in	0.000 ft	0.000 in	0.000 ft
L Only	0.0000 in	0.000 ft	0.000 in	0.000 ft
D+L	0.0000 in	0.000 ft	0.000 in	0.000 ft

5/RFI2

EQUILIBRIUM ENGINEERS
Justin Fenton
Project Engineer
Equilibrium Engineers LLC
16325 Boones Ferry Rd.
Lake Oswego, Oregon 97035
503.636.8388

Project Title:
Engineer:
Project Descr:

Project ID:

Printed: 23 SEP 2013, 10:28AM

Point Load on Slab

File = C:\Users\JUSTIN~1\DOCUME~1\ENERCA~1\CLARKH~1.EC6
ENERCALC, INC. 1983-2013, Build:6.13.8.31, Ver:6.13.8.31

Lic. # : KW-06008381 **Licensee : EQUILIBRIUM ENGINEERS LLC**

Description : Versalam Cantilevered Beam Point Load On Slab

Code References

Calculations per ACI 318-05, IBC 2006, CBC 2007, ASCE 7-05
Load Combinations Used : IBC 2009

Analytical Values

d - Slab Thickness	3.0 in	Ks - Soil Modulus of Subgrade Reaction	100.0 pci
FS - Req'd Factor of Safety	3.0 : 1	Ec - Concrete Elastic Modulus	3,122.0 ksi
		f'c - Concrete Compressive Strength	3.0 ksi
		μ - Poisson's Ratio	0.150
		Min. Adjacent Load Distance	24.559 in

Analysis Formulas

Pn = 1.72 [(Ks R1 / Ec) 10,000 + 3.6] Fr d^2

Ks = Soil modulus of subgrade reaction
R1 = 50% plate average dimension = sqrt(PlWid * PlLen) /2
Ec = Concrete elastic modulus
Fr - Concrete modulus of rupture = 7.5 * sqrt(f'c)
d - Slab Thickness

Min Adjacent Column Distance = 1.5 * ([Ec d^3 / (12 * (1- u^2) Ks] ^ 1/4)

Ec = Concrete elastic modulus
d - Slab Thickness
u - Poisson's ratio
Ks = Soil modulus of subgrade reaction

Load & Capacity Table

Load ID	Plate (in) Wid	Plate (in) Len	R1 (in)	Applied Concentrated Load on Plate - (kip) D	Lr	L	S	W	E	Governing Ld Comb	Pu (kip)	Pn (kip)	Check
1	3.50	3.00	1.62	1.63		3.67				+D+L	5.3	26.2	Pass, FS= 4.94 >= 3

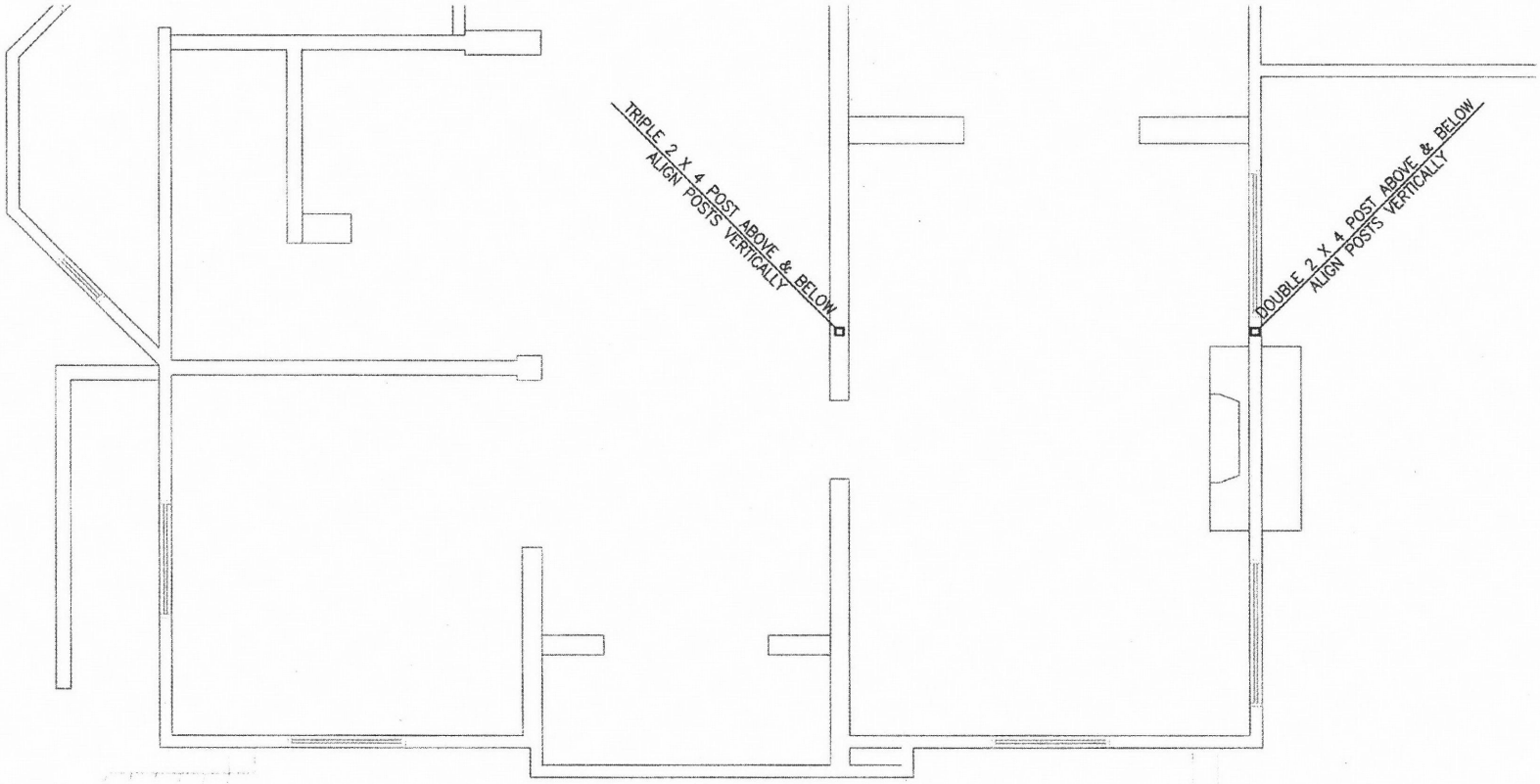

1
ASK-8

FIRST FLOOR FRAMING PLAN

1/4" = 1'-0"

City of Portland
REVIEWED FOR CODE COMPLIANCE
OCT 01 2013
Permit Number

REGISTERED ARCHITECT
DAVID E. WARK
4543
PORTLAND, OREGON
STATE OF OREGON

Hennebery Eddy Architects Inc.

© 2011 Hennebery Eddy Architects, Inc.

CLARK HOUSE APARTMENTS
831 NW 24TH AVE.
Portland, OR 97209

HEA Project no. 12051
Date: 30 SEPTEMBER 2013
Reference: RFI #02
Drawing Reference:

ASK-08

Project CLARK HOUSE APART.	EQUILIBRIUM ENGINEERS	By FENTON	Sheet # 1/SK-3
Location PORTLAND, OR		Date 9/27/13	
Client HEA		Revised	Job # 13005
		Date	

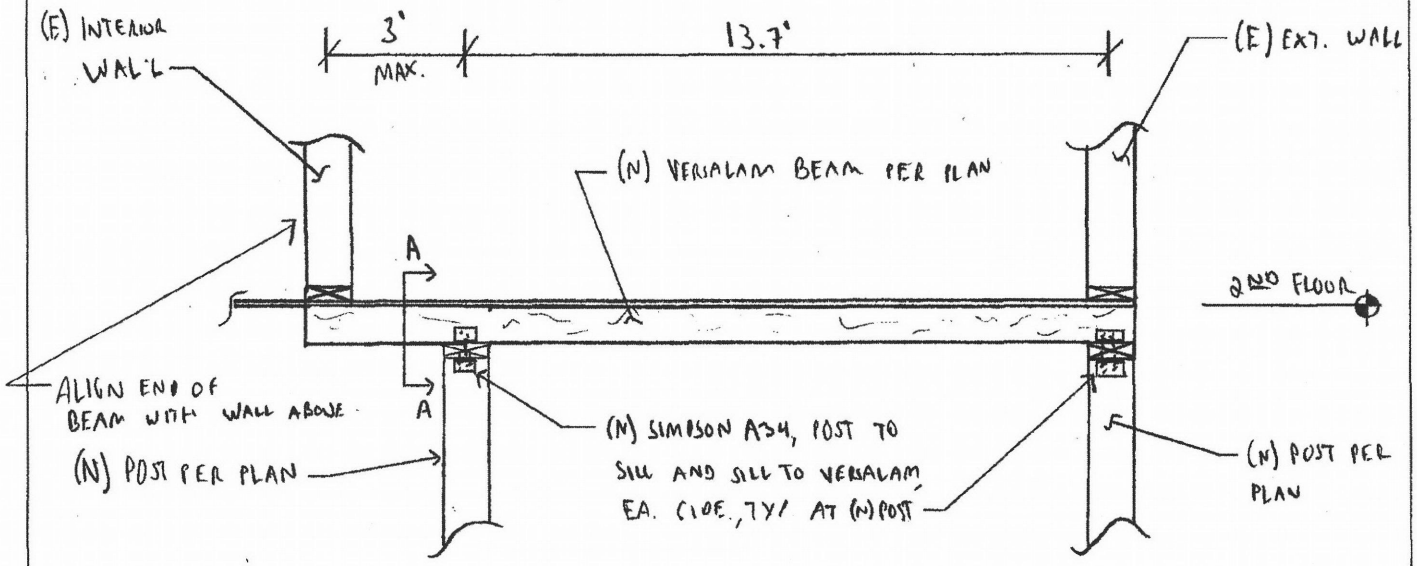

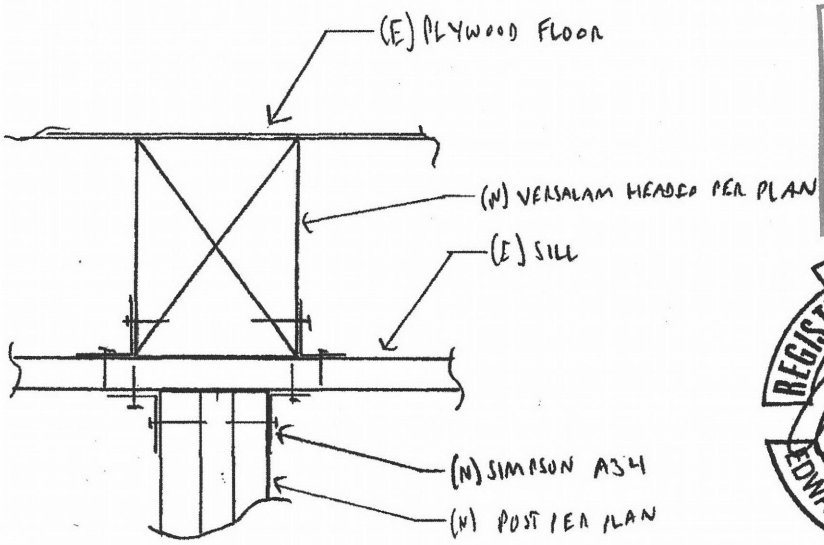

A-A

City of Portland
REVIEWED FOR CODE COMPLIANCE
OCT 01 2013
Permit Number

STRUCTURAL REGISTERED PROFESSIONAL ENGINEER 19402 OREGON JULY 22, 1997 EDWARD P. QUESENBERRY

EXPIRES: 12/31/14

VERSALAM HEADER DETAIL

1
SK-3

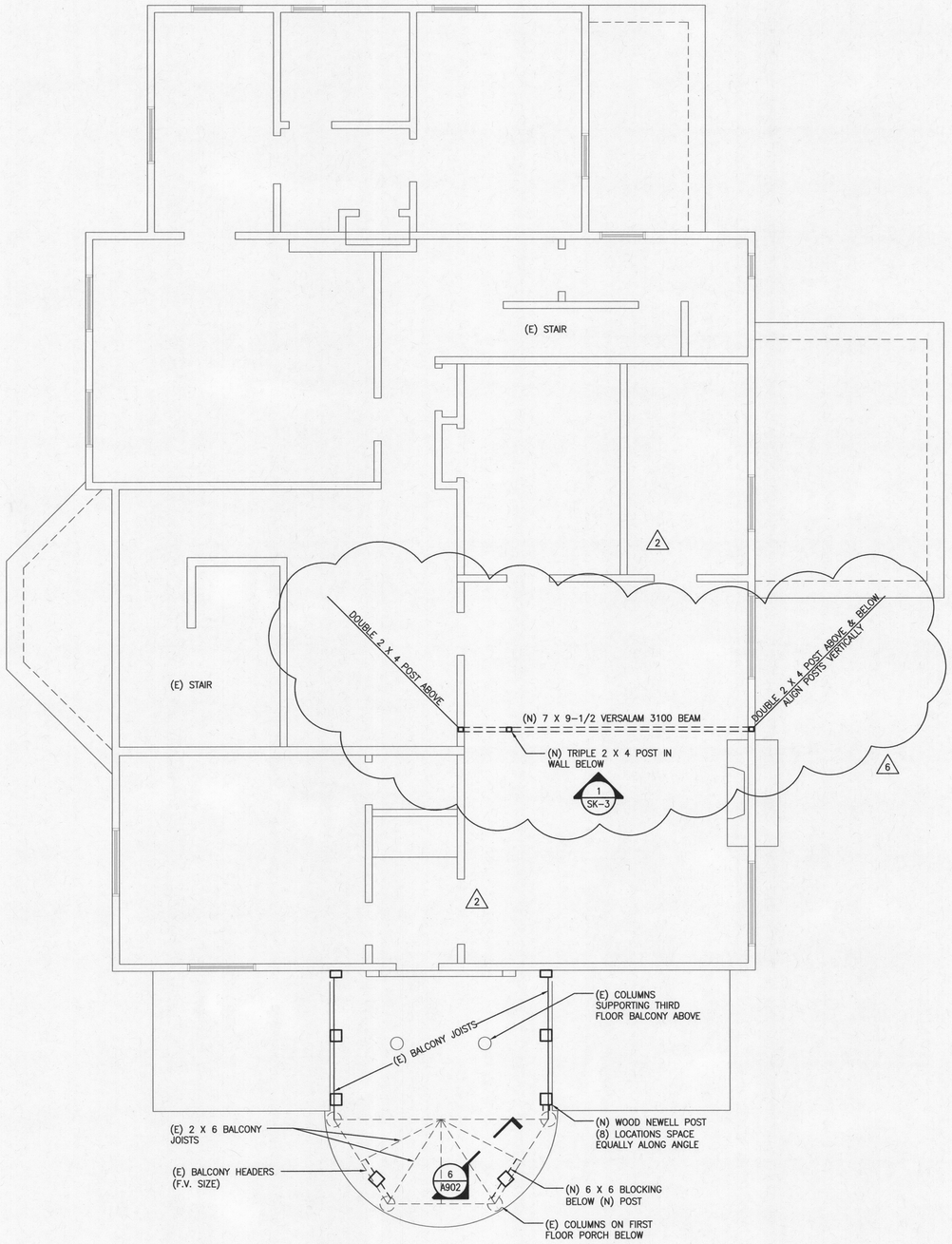

2
A901

SECOND FLOOR BALCONY PLAN

1/4" = 1'-0"

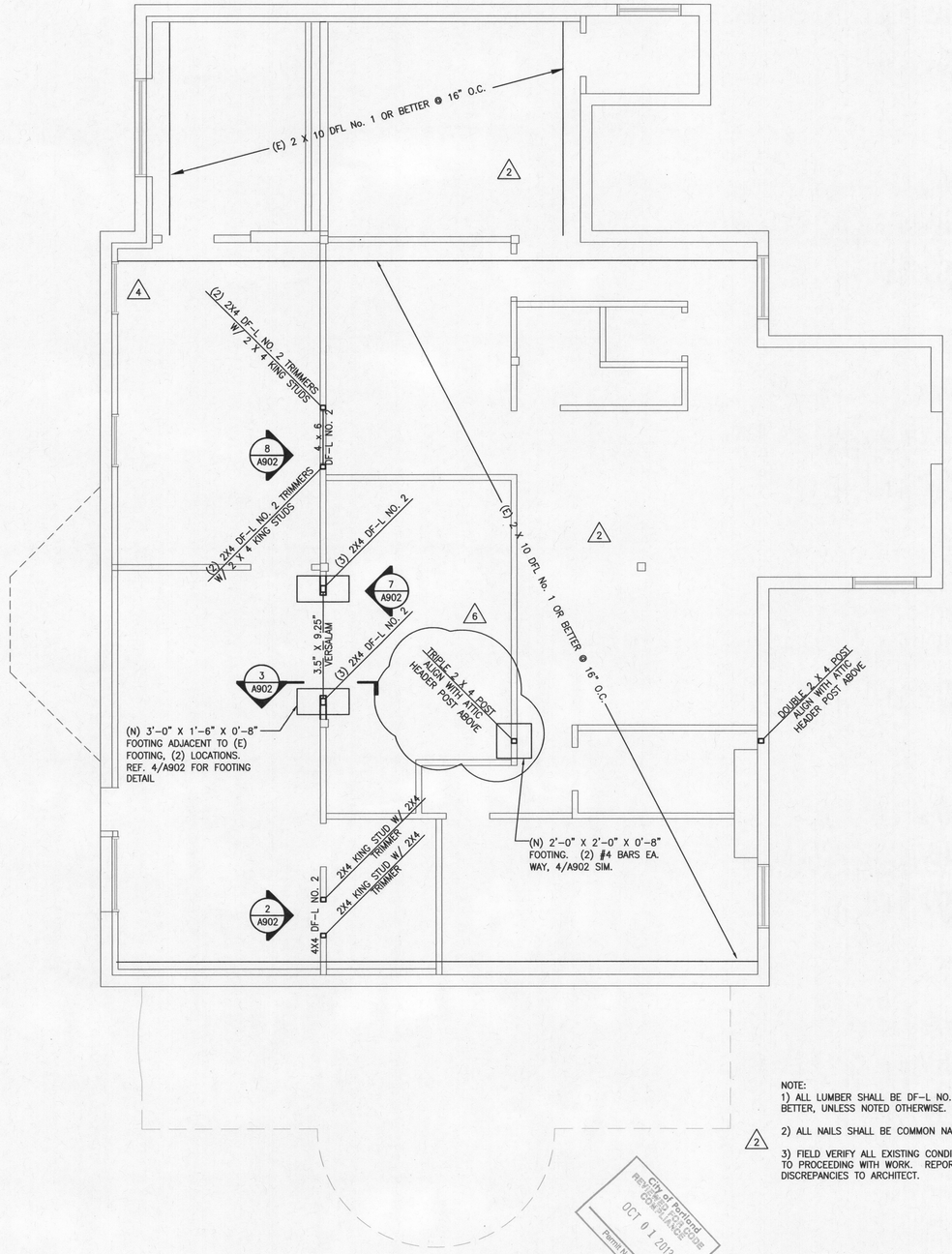

1
A901

BASEMENT FLOOR FRAMING PLAN

1/4" = 1'-0"

NOTE:
1) ALL LUMBER SHALL BE DF-L NO. 2 OR BETTER, UNLESS NOTED OTHERWISE.

2) ALL NAILS SHALL BE COMMON NAILS

3) FIELD VERIFY ALL EXISTING CONDITIONS PRIOR TO PROCEEDING WITH WORK. REPORT ANY DISCREPANCIES TO ARCHITECT.

2

City of Portland REVIEWED FOR CODE COMPLIANCE OCT 01 2013 Permit Number

City of Portland REVIEWED FOR CODE COMPLIANCE OCT 01 2013 Permit Number

REGISTERED ARCHITECT DAVID E. WARK 4583 PORTLAND, OREGON STATE OF OREGON

Hennebery Eddy Architects Inc.
921 SW WASHINGTON STREET SUITE 250
PORTLAND OREGON 97205
(503) 227 4860 TEL
(503) 227 4920 FAX

831 NW 24TH AVE., LLC

CLARK HOUSE APARTMENTS
831 NW 24TH Avenue
Portland, OR

HEA Project no. 12051

Date:
1 22 MARCH 2013 PERMIT REVISIONS
2 29 APRIL 2013 PERMIT REVISIONS
4 30 AUGUST 2013 ASI #01
6 27 SEPTEMBER 2013 RFI #02

Drawn by: KJ
Checked by: SB

Dwg: SECOND FLOOR AND BASEMENT FRAMING PLANS

CONSTRUCTION DOCUMENTS

A901

Copyright 2012 Hennebery Eddy Architects, Inc.

13-160129 REV 02 CO

2

Plot Date and Time:10/1/2013 10:04 AM Full File Path:P:\2012\12051_Clark House\F_CAD\F4_Revit Central\A901.dwg