2080489:03

CITY OF PORTLAND, OREGON - BUREAU OF DEVELOPMENT SERVICES

1900 SW Fourth Avenue, Suite 5000 • Portland, Oregon 97201 • www.portlandonline.com/bds • Fax 503-823-7425

Facility Permit Plan Intake Form

FOR INTAKE, STAFF USE ONLY

Date Received 1/12/09

Building Registration #

Fixed Bid

Bin # B1

Building Permit # 09-101857 FA

Mechanical #

Plumbing Permit #

Electrical Permit # NOT REQUIRED

Building/Mechanical David R

Electrical ~~Mike M~~ Mike M.

Plumbing ~~Wes Cosh~~

Fire ~~Dave J~~

Planning

BES

PDOT

Structural Lisa S

Other

APPLICANT: Complete all sections below that apply to the project. Please print legibly.

Print Name DALE E. POPPE Sign Name Dale E Poppe.

Street Address PO BOX 14310

City PORTLAND State OR Zip Code 97293

Day Phone 503.224.9560 FAX 503.228.1285 email dpoppe@grpmack.com

Plans / permits available for pick up at 1900 SW 4th Avenue, 2nd floor between 8:00 am to 5:00 pm

Contact Name for plan/permit pick up DALE E POPPE

Day Phone 503.224.9560 email dpoppe@grpmack.com

Project Building Name / # PDX EAST BUILDING TWO

Project Address or Location 15311 NE AIRPORT WAY

Project Name and Description ADD ELECTRICAL ROOM DOOR.

Total Project Value $ 6800 Project Reference #/Billing ID # 03-POR-00502

Building Contractor VanOsdel Construction CCB #

MechanicalContractor CCB #

Electrical Contractor CCB# License #

Plumbing Contractor CCB# License #

☒ **Building Permit**

No. of Stories 1

Const. Type III B

[Y] [N] Alarms Required

[Y] [N] Smoke Det. Req'd

[Y] [N] Sprinklers Req'd

(Y) [N] Struct. Eng / Calcs Submitted

☐ **Mechanical Permit**

Mechanical Valuation

Description

☐ **Electrical Permit**

Please provide a completed standard electrical permit application form. You may mail or deliver it to 1900 SW 4th Avenue, Portland, Oregon 97201 or FAX to 503-823-7425.

☐ **Plumbing Permit**

Number of Fixtures

Back Flow Devices

Water Service (# of Feet)

Medical Gas

Other

2

STRUCTURAL REGISTERED PROFESSIONAL ENGINEER 16,880 OREGON SEPT. 21, 199 TIMOTHY L. SCHWEITZER

EXPIRES: 06/30/10

NOTE: PLACE (2) ANGLE CLIPS AT TOP AND BOTTOM OF TS STRONGBACK, PLACE (1) ANGLE ON FRONT OF TS AND (1) ANGLE ON OPP. SIDE OF TS FROM OPNG. @ BOTTOM AS SHOWN

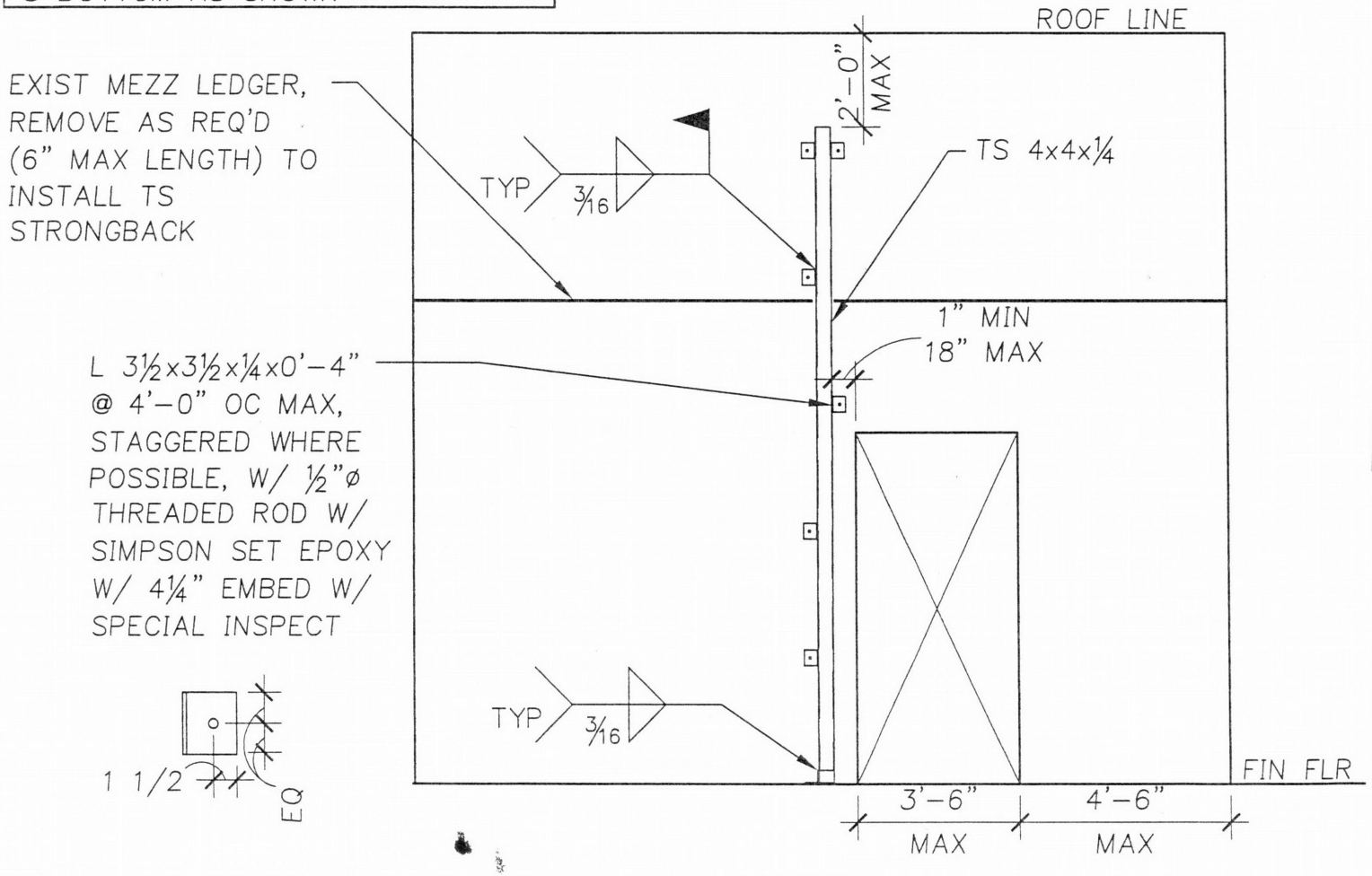

TS STRONGBACK

N.T.S.

WP-06BB

09-101857FA

B3

GROUP MACKENZIE

RiverEast Center
1515 SE Water Ave. - P.O. BOX 14310
PORTLAND, OREGON 97293
TEL (503) 224-9560 - FAX (503) 228-1285

Concrete Tilt-Up Panel Design Per 2006 IBC

PROJECT NAME: PDX East - Man Door Add. PROJECT NO.: 2080489.03 DESIGNER: GJS

NORTH WALL PANELS

OUT - OF - PLANE
GENERAL
LOADING

Panel Ht.	$ht := 29.75 \cdot ft$	Conc Strength	$f_c := 5000 \cdot psi$
Panel Thickness	$t := 8 \cdot in$	Rf Load Ecc.	$e := \frac{t}{2} + 3 \cdot in \quad e = 7\,in$
Reveal Depth	$r_v := 0 \cdot in$	Reinf Yield	$f_y := 60 \cdot ksi$
Stl Depth	$d_{ef} := t - r_v - \frac{0.625 \cdot in}{2} - 1.0 \cdot in \quad d_{ef} = 6.688\,in \quad d_{cl} := \frac{t}{2}$		
Roof DL	$DL := 14 \cdot psf$	Roof Snow Load	$SL := 25 \cdot psf$
Panel Width	$w := 32 \cdot ft$		

GENERAL LOADING

STRUCTURAL REGISTERED PROFESSIONAL ENGINEER 16830 OREGON SEPT. 21, 1993 TIMOTHY L. SCHWEITZER

EXPIRES: 06/30/10

UBC WIND (Per Oregon OSSC) 90 MPH Exp B Wind

$q_s := 20.8 \cdot psf \qquad C_e := .77$

$C_q := 1.2 \qquad I_w := 1.0$

$q_p := q_s \cdot C_q \cdot C_e \cdot I_w \qquad q_p = 19.219\,psf$

$M_W := \frac{q_p \cdot ht^2}{8} \qquad M_W = 2.126 \frac{k \cdot ft}{ft}$

SEISMIC (Per. ASCE 7-05 Sect 12.11.1)

$I_p := 1.0 \qquad h := ht$

$F_a := 1.126 \qquad S_s := 0.934$

$S_{ms} := F_a \cdot S_s$

$S_{ds} := \frac{2}{3} \cdot S_{ms} \qquad S_{ds} = 0.701$

$C_7 := .15 \cdot kcf \cdot t \qquad C_7 = 100\,psf$ Wt. of Panel

$F_p := 0.4S_{ds} \cdot I_p$ $\quad F_p = 0.28$

$q_{7p} := F_p \cdot C_7$ $\quad q_{7p} = 28.045\,psf$ $\quad M_S := \frac{q_{7p} \cdot ht^2}{8}$ $\quad M_S = 3.103\,k \cdot \frac{ft}{ft}$

SOLID PANEL

Panel Ht. $\quad ht = 29.75\,ft$ $\quad$ Depth of Stl $\quad d := d_{cl}$

Panel Width $\quad w := 32 \cdot ft$ $\quad$ Ecc. of Rf Load $\quad e = 7\,in$

Panel Leg $\quad L := 1 \cdot ft$ $\quad x := 1$

$P_{dl} := \frac{DL \cdot 42 \cdot ft}{2}$ $\quad P_{dl} = 294\,plf$

$P_{ll} := P_{dl} \cdot \frac{SL}{DL}$ $\quad P_{ll} = 525\,plf$

$P_2 := C_7 \cdot \frac{ht}{2}$ $\quad P_2 = 1.487 \times 10^3\,plf$

$M_w := M_W$ $\quad M_w = 2.126 \frac{k \cdot ft}{ft}$

$M_s := M_S$ $\quad M_s = 3.103 \frac{k \cdot ft}{ft}$

Compression Check

$P_s := P_{dl} + P_{ll} + P_2$ $\quad P_s = 2.306\,klf$

$P_a := 0.06 \cdot f_c \cdot t$ $\quad P_a = 28.8\,klf$

$CompressionCheck := if(P_a > P_s, "Okay", "No Good")$ $\quad CompressionCheck = "Okay"$

$nb := \frac{12}{10}$ number 4 bars @ 10" oc at cl

$A_s := \frac{nb \cdot 0.20 \cdot in^2}{L}$ $\quad A_s = 0.24 \frac{in^2}{ft}$

DETERMINE Mn USING THE YELLOW BOOK METHOD

$\beta_1 := 0.85 - 0.05 \cdot \left(\frac{f_c - 4000 \cdot psi}{1000 \cdot psi}\right)$

$\rho_b := \frac{0.85 \cdot f_c}{f_y} \cdot \beta_1 \cdot \left(\frac{87000 \cdot psi}{87000 \cdot psi + f_y}\right)$

$i := 0..4$

$A_g := t \cdot 12 \cdot in$

$P_{u_i} := \left(x_{i,0} + x_{i,1} + x_{i,2}\right) \cdot k$

Ultimate Loads $\quad x := \begin{pmatrix} 1.05 \cdot P_{dl} \cdot \frac{1}{klf} & 1.05 \cdot P_2 \cdot \frac{1}{klf} & 1.28 \cdot P_{ll} \cdot \frac{1}{klf} & 0.8 \cdot M_w \cdot \frac{1}{k} & 0 \\ 1.05 \cdot P_{dl} \cdot \frac{1}{klf} & 1.05 \cdot P_2 \cdot \frac{1}{klf} & \frac{1.28}{2} \cdot P_{ll} \cdot \frac{1}{klf} & 1.6 \cdot M_w \cdot \frac{1}{k} & 0 \\ 1.2 \cdot P_{dl} \cdot \frac{1}{klf} & 1.2 \cdot P_2 \cdot \frac{1}{klf} & 0.2 \cdot P_{ll} \cdot \frac{1}{klf} & 1.0 \cdot M_s \cdot \frac{1}{k} & 0 \\ 0.9 \cdot P_{dl} \cdot \frac{1}{klf} & 0.9 P_2 \cdot \frac{1}{klf} & 0 & 1.0 \cdot M_s \cdot \frac{1}{k} & 0 \\ 0.9 \cdot P_{dl} \cdot \frac{1}{klf} & 0.9 \cdot P_2 \cdot \frac{1}{klf} & 0 & 1.6 \cdot M_w \cdot \frac{1}{k} & 0 \end{pmatrix}$

$$X_i := \frac{P_{u_i} + A_s \cdot ft \cdot f_y}{0.85 \cdot f_c \cdot 12 \cdot in}$$

$$A_{se_i} := \frac{P_{u_i} + A_s \cdot ft \cdot f_y}{f_y}$$

$$\phi_i := 0.9$$

$$M_{n_i} := A_{se_i} \cdot f_y \cdot \left(d - \frac{X_i}{2}\right)$$

$$\phi M_{n_i} := \phi_i \cdot M_{n_i}$$

Service Loads
>>>

$$y := \begin{bmatrix} 1 \cdot P_{dl} \cdot \frac{1}{klf} & 1 \cdot P_2 \cdot \frac{1}{klf} & 1 \cdot P_{ll} \cdot \frac{1}{klf} & \frac{1}{2} \cdot M_w \cdot \frac{1}{k} & 0 \\ 1 \cdot P_{dl} \cdot \frac{1}{klf} & 1 \cdot P_2 \cdot \frac{1}{klf} & \frac{1}{2} \cdot P_{ll} \cdot \frac{1}{klf} & 1 \cdot M_w \cdot \frac{1}{k} & 0 \\ 1 \cdot P_{dl} \cdot \frac{1}{klf} & 1 \cdot P_2 \cdot \frac{1}{klf} & 0 & \left(\frac{1}{1.4}\right) \cdot M_s \cdot \frac{1}{k} & 0 \\ 1 \cdot P_{dl} \cdot \frac{1}{klf} & 1 \cdot P_2 \cdot \frac{1}{klf} & 0 & \left(\frac{1}{1.4}\right) \cdot M_s \cdot \frac{1}{k} & 0 \\ 1 \cdot P_{dl} \cdot \frac{1}{klf} & 1 \cdot P_2 \cdot \frac{1}{klf} & 0 & 1 \cdot M_w \cdot \frac{1}{k} & 0 \end{bmatrix}$$

Steel Ratio check -Tension controlled required

$d_t := d$ Depth to Extreme Tension Fiber

$C_i := \frac{X_i}{\beta_1}$ Neutral Axis Location

$$flag_i := if\left(\frac{C_i}{d_t} < 0.375, \text{"OK"}, \text{"Revise Steel"}\right)$$

$\frac{C_i}{d_t} =$

0.104
0.102
0.102
0.098
0.098

$$flag = \begin{pmatrix} \text{"OK"} \\ \text{"OK"} \\ \text{"OK"} \\ \text{"OK"} \\ \text{"OK"} \end{pmatrix}$$

DEFLECTIONS AND Mu

$$I_g := \frac{12 \cdot in \cdot t^3}{12}$$

$$E_c := 57000 \cdot \sqrt{\frac{f_c}{psi}} \cdot psi$$

$$C_i := \frac{X_i}{0.85}$$

$$n := \frac{29000 \cdot ksi}{E_c}$$

$$I_{cr_i} := \frac{12 \cdot in \cdot (C_i)^3}{3} + n \cdot A_{se_i} \cdot (d - C_i)^2$$

$$\Delta_{n_i} := \frac{5 \cdot M_{n_i} \cdot ht^2}{48 \cdot E_c \cdot I_{cr_i}}$$

$$f_r := 7.5 \cdot \sqrt{\frac{f_c}{psi}} \cdot psi$$

$$M_{u_i} := x_{i,3} \cdot lk + \left(x_{i,0} + x_{i,2}\right) \cdot k \cdot \frac{e}{2} + \left(x_{i,0} + x_{i,1} + x_{i,2}\right) \cdot k \cdot \Delta M_{s_i} := y_{i,3} \cdot lk + \left(y_{i,0} + y_{i,2}\right) \cdot k \cdot \frac{e}{2} + \left(y_{i,0} + y_{i,1} + y_{i,2}\right) \cdot k \cdot \frac{ht}{150}$$

$$M_{cr} := \frac{f_r \cdot I_g}{\frac{t}{2}} \qquad \Delta_{cr} := \frac{5 \cdot M_{cr} \cdot ht^2}{48 \cdot E_c \cdot I_g} \qquad \Delta_{max} := \frac{ht}{150} \qquad \Delta_{s_i} := \Delta_{cr} + \left(\frac{M_{s_i} - M_{cr}}{M_{n_i} - M_{cr}}\right) \cdot \left(\Delta_{n_i} - \Delta_{cr}\right)$$

$$\Delta_{s_i} := \text{if}\left(M_{s_i} < M_{cr}, \frac{5 \cdot M_{s_i} \cdot ht^2}{48 \cdot E_c \cdot I_g}, \Delta_{s_i}\right)$$

Note: Load Combo Based on ACI Appendix C

$M_i := 0$ $\qquad \Delta_i := 0$

1.05DL + 1.28SL + .8WL

$\phi M_{n_0} = 58.46\,k \cdot in$ > $M_{u_0} = 44.216\,k \cdot in$

$M_i := \text{if}\left(\phi M_{n_i} > M_{u_i}, \text{"OK"}, 0\right)$

$\Delta_{max} = 2.38\,in$ > $\Delta_{s_0} = 0.136\,in$

$\Delta_i := \text{if}\left(\Delta_{max} > \Delta_{s_i}, \text{"OK"}, 0\right)$

1.05DL + .5LL + 1.6WL

$\phi M_{n_1} = 57.35\,k \cdot in$ > $M_{u_1} = 60.706\,k \cdot in$

Check

$\Delta_{max} = 2.38\,in$ > $\Delta_{s_1} = 0.208\,in$

$$M = \begin{pmatrix} \text{"OK"} \\ 0 \\ \text{"OK"} \\ \text{"OK"} \\ \text{"OK"} \end{pmatrix} \qquad \Delta = \begin{pmatrix} \text{"OK"} \\ \text{"OK"} \\ \text{"OK"} \\ \text{"OK"} \\ \text{"OK"} \end{pmatrix}$$

1.2DL + .2LL + 1.0E

$\phi M_{n_2} = 57.47\,k \cdot in$ > $M_{u_2} = 56.755\,k \cdot in$

$\Delta_{max} = 2.38\,in$ > $\Delta_{s_2} = 0.205\,in$

0.9DL + 1.0E

$\phi M_{n_3} = 55.352\,k \cdot in$ > $M_{u_3} = 50.896\,k \cdot in$

$\Delta_{max} = 2.38\,in$ > $\Delta_{s_3} = 0.205\,in$

<u>0.9DL + 1.6WL</u>

$\phi M_{n_4} = 55.352\,k\cdot in$ > $M_{u_4} = 54.488\,k\cdot in$

$\Delta_{max} = 2.38\,in$ > $\Delta_{s_4} = 0.198\,in$

PANEL W/ OPEN'G
#1 - New Man Door

Panel Ht.	$ht = 29.75\,ft$	Steel Depth	$d := d_{ef}$ $d = 6.688\,in$
Panel Width	$w := 32\cdot ft$	Panel Thick.	$t = 8\,in$
Opening Width	$w_o := 3.5\cdot ft$	Rf Load Ecc.	$e = 7\,in$
Opening Ht.	$ht_o := 8\cdot ft$	Reveal	$r_v = 0\,in$
Panel Leg	$L := 4.5\cdot ft$		

$$x := \frac{w_o\cdot\frac{1}{2} + L}{L}$$

$$P_{dl} := \frac{DL\cdot 42\cdot ft}{2}\cdot x \qquad P_{dl} = 408.333\,plf$$

$$P_{ll} := P_{dl}\cdot\frac{SL}{DL} \qquad P_{ll} = 729.167\,plf$$

$$P_2 := C_7\cdot[(ht)\cdot .5]\cdot x \qquad P_2 = 2.066\times 10^3\,plf$$

$$M_w := M_W\cdot x \qquad M_w = 2.953\,\frac{k\cdot ft}{ft}$$

Sei Mom w/ Opening

$$w_1 := q_{7p}\cdot x \qquad w_1 = 38.951\,psf$$

$$w_2 := \frac{2.25\cdot psf\cdot w_o\cdot 0.5 + q_{7p}\cdot L}{L}$$

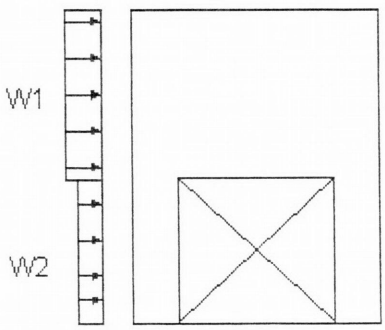

$$R_{bot} := \frac{w_2\cdot ht}{2} + \frac{(w_1 - w_2)\cdot(ht - ht_o)^2}{2\cdot ht}$$

$$R_{top} := \left[w_2\cdot ht_o + w_1\cdot(ht - ht_o)\right] - R_{bot}$$

$$x_m := \frac{R_{top}}{w_1} \qquad x_m = 14.598\,ft$$

$$M_s := R_{top}\cdot x_m - \frac{w_1\cdot x_m^2}{2} \qquad M_s = 4.15\,\frac{k\cdot ft}{ft}$$

Compression Check

$P_s := P_{dl} + P_{ll} + P_2$ $\qquad P_s = 3.203\,klf$

$P_a := 0.06 \cdot f_c \cdot t$ $\qquad P_a = 28.8\,klf$

$Check := if(P_a > P_s, "Okay", "No Good")$ $\qquad Check = "Okay"$

$nb := 3$ ***# 5 Each Face in Leg on (1) side of opening only! typical reinforcing on other side (#4 @ 10" o.c. @ CL)***

$A_s := \frac{nb \cdot 0.31 \cdot in^2}{L}$ $\qquad A_s = 0.207 \frac{in^2}{ft}$

DETERMINE Mn USING THE YELLOW BOOK METHOD

$\beta_1 := 0.85 - 0.05 \cdot \left(\frac{f_c - 4000 \cdot psi}{1000 \cdot psi}\right)$

$\rho_b := \frac{0.85 \cdot f_c}{f_y} \cdot \beta_1 \cdot \left(\frac{87000 \cdot psi}{87000 \cdot psi + f_y}\right)$

$i := 0..4$

$A_g := t \cdot 12 \cdot in$

$P_{u_i} := \left(x_{i,0} + x_{i,1} + x_{i,2}\right) \cdot k$

$X_i := \frac{P_{u_i} + A_s \cdot ft \cdot f_y}{0.85 \cdot f_c \cdot 12 \cdot in}$

$A_{se_i} := \frac{P_{u_i} + A_s \cdot ft \cdot f_y}{f_y}$

$\phi_i := 0.9$

$M_{n_i} := A_{se_i} \cdot f_y \cdot \left(d - \frac{X_i}{2}\right)$

$\phi M_{n_i} := \phi_i \cdot M_{n_i}$

Steel Ratio check-Tension controlled required

Ultimate Loads

$$x := \begin{pmatrix} 1.05 \cdot P_{dl} \cdot \frac{1}{klf} & 1.05 \cdot P_2 \cdot \frac{1}{klf} & \frac{1.28}{2} \cdot P_{ll} \cdot \frac{1}{klf} & 1.6 \cdot M_w \cdot \frac{1}{k} & 0 \\ 1.05 \cdot P_{dl} \cdot \frac{1}{klf} & 1.05 \cdot P_2 \cdot \frac{1}{klf} & 1.28 \cdot P_{ll} \cdot \frac{1}{klf} & \frac{1.6}{2} \cdot M_w \cdot \frac{1}{k} & 0 \\ 1.2 \cdot P_{dl} \cdot \frac{1}{klf} & 1.2 \cdot P_2 \cdot \frac{1}{klf} & 0.2 \cdot P_{ll} \cdot \frac{1}{klf} & 1.0 \cdot M_s \cdot \frac{1}{k} & 0 \\ 0.9 \cdot P_{dl} \cdot \frac{1}{klf} & 0.9 \cdot P_2 \cdot \frac{1}{klf} & 0 & 1.0 \cdot M_s \cdot \frac{1}{k} & 0 \\ 0.9 \cdot P_{dl} \cdot \frac{1}{klf} & 0.9 \cdot P_2 \cdot \frac{1}{klf} & 0 & 1.6 \cdot M_w \cdot \frac{1}{k} & 0 \end{pmatrix}$$

Service Loads
>>>

$$y := \begin{bmatrix} 1 \cdot P_{dl} \cdot \frac{1}{klf} & 1 \cdot P_2 \cdot \frac{1}{klf} & \frac{1}{2} \cdot P_{ll} \cdot \frac{1}{klf} & 1 \cdot M_w \cdot \frac{1}{k} & 0 \\ 1 \cdot P_{dl} \cdot \frac{1}{klf} & 1 \cdot P_2 \cdot \frac{1}{klf} & 1 \cdot P_{ll} \cdot \frac{1}{klf} & \frac{1}{2} \cdot M_w \cdot \frac{1}{k} & 0 \\ 1 \cdot P_{dl} \cdot \frac{1}{klf} & 1 \cdot P_2 \cdot \frac{1}{klf} & 0 & \left(\frac{1}{1.4}\right) \cdot M_s \cdot \frac{1}{k} & 0 \\ 1 \cdot P_{dl} \cdot \frac{1}{klf} & 1 \cdot P_2 \cdot \frac{1}{klf} & 0 & \left(\frac{1}{1.4}\right) \cdot M_s \cdot \frac{1}{k} & 0 \\ 1 \cdot P_{dl} \cdot \frac{1}{klf} & 1 \cdot P_2 \cdot \frac{1}{klf} & 0 & 1 \cdot M_w \cdot \frac{1}{k} & 0 \end{bmatrix}$$

$d_t := d$ Depth to Extreme Tension Fiber

$C_i := \frac{X_i}{B_i}$ Neutral Axis Location

$flag_i := if\left(\frac{C_i}{d_t} < 0.375, "OK", "Revise Steel"\right)$

$\frac{C_i}{d_t} =$

0.057
0.058
0.057
0.054
0.054

$flag = \begin{pmatrix} "OK" \\ "OK" \\ "OK" \\ "OK" \\ "OK" \end{pmatrix}$

DEFLECTIONS AND Mu

$ht' := ht \cdot 1$ **ht * 0.8 For dock high Panels Only**

$I_g := \frac{12 \cdot in \cdot t^3}{12}$ $C_i := \frac{X_i}{0.85}$ $E_c := 57000 \cdot \sqrt{\frac{f_c}{psi}} \cdot psi$ $n := \frac{29000 \cdot ksi}{E_c}$

$I_{cr_i} := \frac{12 \cdot in \cdot (C_i)^3}{3} + n \cdot A_{se_i} \cdot (d - C_i)^2$ $\Delta_{n_i} := \frac{5 \cdot M_{n_i} \cdot ht'^2}{48 \cdot E_c \cdot I_{cr_i}}$ $f_r := 7.5 \cdot \sqrt{\frac{f_c}{psi}} \cdot psi$

$M_{u_i} := x_{i,3} \cdot lk + (x_{i,0} + x_{i,2}) \cdot k \cdot \frac{e}{2} + (x_{i,0} + x_{i,1} + x_{i,2}) \cdot k \cdot \Delta_n$ $M_{s_i} := y_{i,3} \cdot lk + (y_{i,0} + y_{i,2}) \cdot k \cdot \frac{e}{2} + (y_{i,0} + y_{i,1} + y_{i,2}) \cdot k \cdot \frac{ht}{150}$

$M_{cr} := \frac{f_r \cdot I_g}{\frac{t}{2}}$ $\Delta_{cr} := \frac{5 \cdot M_{cr} \cdot ht'^2}{48 \cdot E_c \cdot I_g}$ $\Delta_{max} := \frac{ht}{150}$ $\Delta_{s_i} := \Delta_{cr} + \left(\frac{M_{s_i} - M_{cr}}{M_{n_i} - M_{cr}}\right) \cdot (\Delta_{n_i} - \Delta_{cr})$

$\Delta_{s_i} := if\left(M_{s_i} < M_{cr}, \frac{5 \cdot M_{s_i} \cdot ht'^2}{48 \cdot E_c \cdot I_g}, \Delta_{s_i}\right)$

1.05DL + 1.28LL/2 + 1.6WL

Note: Load Combo Based on ACI Appendix C

$M_i := 0$ $\Delta_i := 0$

$\phi M_{n_0} = 90.968\, k \cdot in$ > $M_{u_0} = 73.529\, k \cdot in$

$M_i := if(\phi M_{n_i} > M_{u_i}, "OK", 0)$

$\Delta_{max} = 2.38\, in$ > $\Delta_{s_0} = 0.289\, in$

$\Delta_i := if(\Delta_{max} > \Delta_{s_i}, "OK", 0)$

1.05DL + 1.28LL + 1.6WL/2

$\phi M_{n_1} = 93.647\, k \cdot in$ > $M_{u_1} = 48.937\, k \cdot in$

$\Delta_{max} = 2.38\, in$ > $\Delta_{s_1} = 0.189\, in$

1.2DL + 0.2LL + 1.0E

$\phi M_{n_2} = 91.257\, k \cdot in$ > $M_{u_2} = 65.952\, k \cdot in$

Check

$M = \begin{pmatrix} "OK" \\ "OK" \\ "OK" \\ "OK" \\ "OK" \end{pmatrix}$ $\Delta = \begin{pmatrix} "OK" \\ "OK" \\ "OK" \\ "OK" \\ "OK" \end{pmatrix}$

$\Delta_{max} = 2.38\,in$ > $\Delta_{s_2} = 0.276\,in$

<u>0.9DL + 1.0E</u>

$\phi M_{n_3} = 86.148\,k\cdot in$ > $M_{u_3} = 60.995\,k\cdot in$

$$M_u = \begin{pmatrix} 6.127 \\ 4.078 \\ 5.496 \\ 5.083 \\ 5.658 \end{pmatrix} k\cdot ft$$

$\Delta_{max} = 2.38\,in$ > $\Delta_{s_3} = 0.276\,in$

<u>0.9DL + 1.6WL</u>

$\phi M_{n_4} = 86.148\,k\cdot in$ > $M_{u_4} = 67.892\,k\cdot in$

$$M_s = \begin{pmatrix} 3.742 \\ 2.444 \\ 3.574 \\ 3.574 \\ 3.563 \end{pmatrix} k\cdot ft$$

$\Delta_{max} = 2.38\,in$ > $\Delta_{s_4} = 0.275\,in$

This design is utilizing the (3) #5 bars @ each face in the leg at the edge of the panel. This assumes that the mandoor is placed at a maximum distance of 4'-6" from the panel joint. The side of the mandoor opposite the leg will require a strongback based on the analysis of the existing solid panel. See below for strongback design.

STRONGBACK DESIGN:

Design strongback to take entire OOP moment!

$$M_u = \begin{pmatrix} 6.127 \\ 4.078 \\ 5.496 \\ 5.083 \\ 5.658 \end{pmatrix} k\cdot ft$$

$F_y := 46ksi$

$\phi_m := 0.9$

$M_{u_max} := 6.535k\cdot ft$

$Z_{req} := \dfrac{M_{u_max}}{F_y\cdot\phi_m}$ $\quad Z_{req} = 1.894\,in^3$

Try an HSS 4x4x1/4

$Z_{4x4} := 4.69in^3$

$M_{4x4} := F_y\cdot Z_{4x4}$ $\quad M_{4x4} = 17.978\,k\cdot ft$

$flag := if(M_{4x4} > M_{u_max}, "OK", "NG!!!")$ $\quad flag = "OK"$

PORTLAND CORPORATE CENTER EAST BUILDING 2
ELECTRICAL ROOM DOOR ADDITION
PERMIT SUBMITTAL - JANUARY 5, 2009

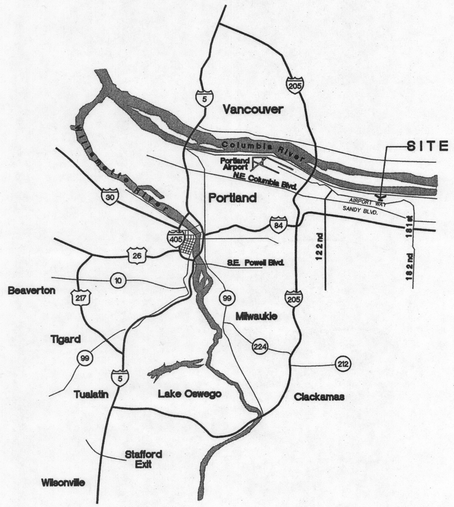

VACINITY MAP
N.T.S.

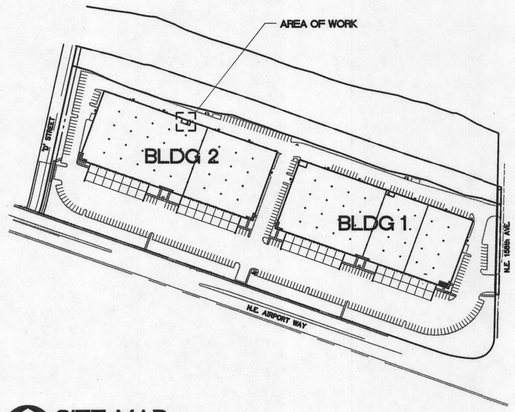

SITE MAP
N.T.S.

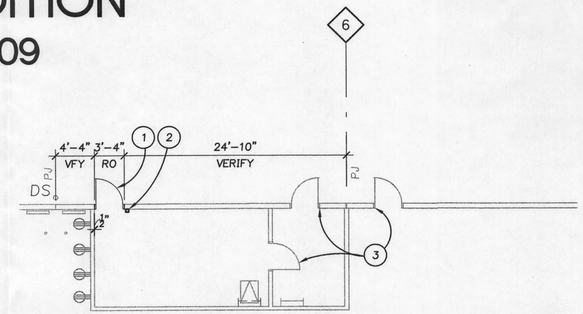

2 A1.0 ENLARGED FLOOR PLAN
1/8"=1'-0"

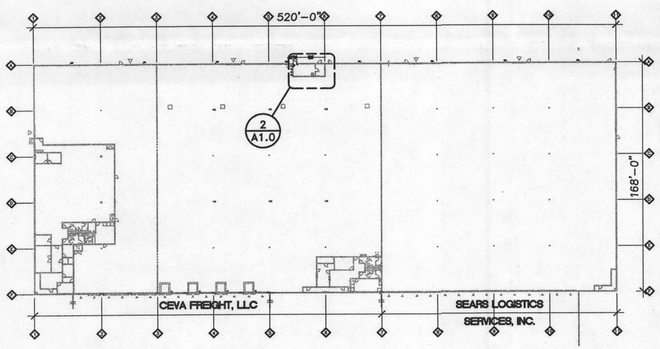

1 A1.0 OVERALL BUILDING PLAN
1/64"=1'-0"

DESCRIPTION OF WORK

SAWCUT AND INSTALL NEW 3'x7' HM DOOR TO MATCH EXISTING. NO OVERCUTS ALLOWED.

SPECIFICATIONS

DOOR SCHEDULE

DOOR NO.	ROOM NAME	DOOR					DOOR FRAME		HARDWARE GROUP	LABEL	JAMB DETAIL	DOOR NO.
		TYPE	SIZE	THK.	MATL.	FINISH	MATL.	FINISH				
101	INVERTER ROOM	HM	3'x7'	1¾	HM	P	HM	P	H-1	–	3/A1.0	101

08 11 00 STEEL DOOR AND FRAMES

1. DOOR: 20GA, POLYSTYRENE CORE, GALVANIZED, HOT DIPPED GALVANIZED STEEL, CECO LEGION POLYSTYRENE CORE.
   FRAME: 16GA, HOT DIPPED GALVANIZED STEEL, UNEQUAL RABBET

08 71 00 DOOR HARDWARE

1. NO EXTERIOR HARDWARE, PANIC ON INTERIOR FOR EXITING ONLY

DOOR HARDWARE
H-1 EXTERIOR ELECTRICAL ROOM

a.	Exit Device	VonDuprin 33A-EO
b.	Butts	Hager 1279/1911
c.	Flush Bolt	Ives 262
d.	Lock Guard	Ives 180
e.	Threshold	Stanley 10-5430 "Latch Track"
f.	Weatherstripping	Pemko 297AS
g.	Door Drip	Pemko 346C

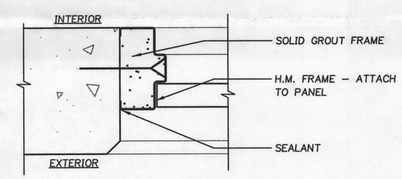

3 A1.0 EXTERIOR DOOR JAMB/HEAD
3" = 1'-0"
A17-6

NOTE: PLACE (2) ANGLE CLIPS AT TOP AND BOTTOM OF TS STRONGBACK, PLACE (1) ANGLE ON FRONT OF TS AND (1) ANGLE ON OPP. SIDE OF TS FROM OPNG. @ BOTTOM AS SHOWN

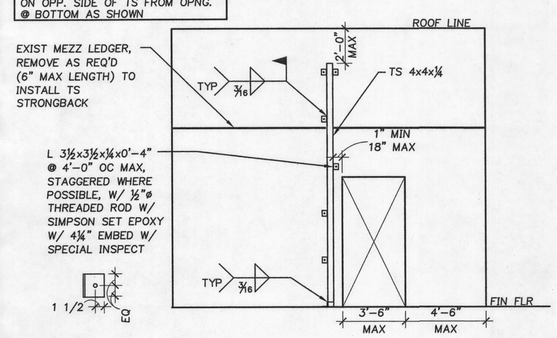

4 A1.0 TS STRONGBACK
N.T.S.
WP-068B

GENERAL NOTES

A. VERIFY AND CONFIRM ALL DIMENSIONS AND CONDITIONS PRIOR TO START OF WORK. NOTIFY ARCHITECT/ENGINEER OF ANY DISCREPANCIES PRIOR TO START OF WORK.

KEYNOTES

1. SAWCUT AND INSTALL NEW 3'X7' HM EGRESS DOOR.NO OVERCUTS ALLOWED. MAINTAIN 12" CLR TO OBSTRUCTIONS AT LATCH SIDE INTERIOR. SEE SPECIFICATIONS
2. INSTALL STRONGBACK PER 2/A1.0 VERIFY ALL CLEARANCES PRIOR TO CONSTRUCTION.
3. EXISTING DOOR TO REMAIN

LEGEND

○	KEYNOTE
◇	GRIDLINE
(101)	DOOR NUMBER, SEE SPECIFICATIONS
INVERTER ROOM / 101	ROOM NAME AND NUMBER
P	PAINTED
HM	HOLLOW METAL

GROUP MACKENZIE
Architecture
Interior Design
Landscape Planning
Seattle WA 206.749.9993
Civil Engineering
Structural Engineering
Transportation Planning
Landscape Architecture
Portland OR 503.224.9560
Vancouver WA 360.695.7879

Client

VANOSDEL CONSTRUCTION
CONTACT: RUSS VANOSDEL
P.O. BOX 1057
BATTLEGROUND, WA 98604
360-687-8636

Project

PORTLAND CORP. PARK EAST BLDG 2
ELECTRICAL ROOM DOOR ADDITION
15311 NE AIRPORT WAY
PORTLAND, OR 97230

STRUCTURAL REGISTERED PROFESSIONAL ENGINEER OREGON SEPT. 21, 1993 TIMOTHY L. SCHWETTER
REGISTERED ARCHITECT PORTLAND, OREGON STATE OF OREGON
EXPIRES: 06/30/10

© GROUP MACKENZIE 2009
ALL RIGHTS RESERVED
THESE DRAWINGS ARE THE PROPERTY OF GROUP MACKENZIE AND ARE NOT TO BE USED OR REPRODUCED IN ANY MANNER, WITHOUT PRIOR WRITTEN PERMISSION.

REVISIONS:

REVISION DELTA	REVISIONS THIS SHEET	REVISION DELTA CLOSING DATE

SHEET TITLE:
TITLE/PLAN/DETAILS /SPECS

City of Portland REVIEWED FOR CODE COMPLIANCE JAN 27 2009 09-101852 FA1 Permit Number D Rock

DRAWN BY: REW
CHECKED BY: DEP
SHEET:
A1.0
B3

JOB NO. 2080489.03

09-101852FA2

PERMIT SET - JANUARY 5, 2009

20804893\ARCH\489_03-A1.0.DWG DEP 01/07/09 17:50 1:96.00