T·Mobile®

PORTLAND AIRPORT

7100 NE AIRPORT WAY
PORTLAND, OR 97218
MULTNOMAH COUNTY

PO01871A

LATITUDE 45° 35' 21.61" N LONGITUDE 122° 35' 30.53" W

City of Portland
REVIEWED FOR CODE COMPLIANCE
APR 08 2013
Permit Number

PROPRIETARY INFORMATION

THE INFORMATION CONTAINED IN THIS SET OF CONSTRUCTION DOCUMENTS IS PROPRIETARY BY NATURE. ANY USE OR DISCLOSURE OTHER THAN THAT WHICH RELATES TO T-MOBILE WIRELESS, LLC. SERVICES IS STRICTLY PROHIBITED.

VICINITY MAP

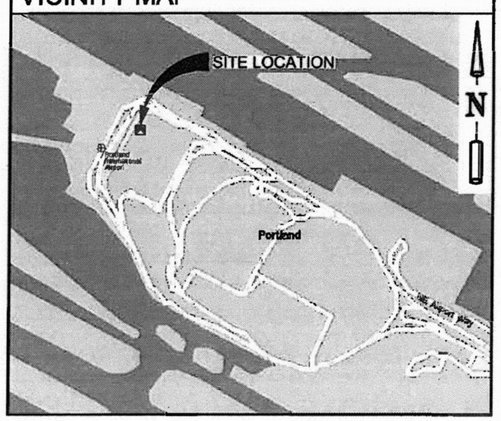

GENERAL LOCATION MAP

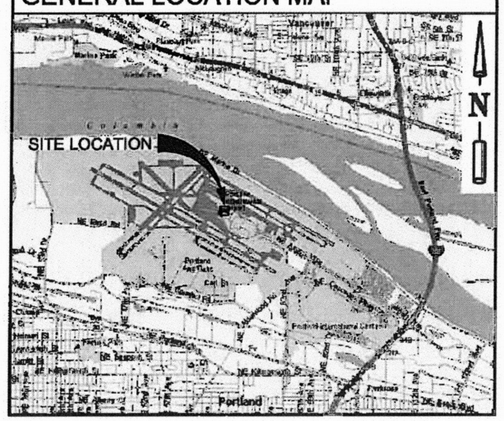

PROJECT TEAM

APPLICANT:
T-MOBILE
8960 NE ALDERWOOD RD
PORTLAND, OR 97220

CONSULTING ENGINEER:
CORNERSTONE ENGINEERING, INC.
16928 WOODINVILLE REDMOND ROAD NE, SUITE 210
WOODINVILLE, WA 98072
MARK W OLSON, P.E.
PH: (425) 487-1732
FAX: (425) 487-1734

PROJECT CONSULTANT:
ORDELIA PACIFIC CORPORATION
425 PONTIUS AVENUE N SUITE 200
SEATTLE, WA 98109
PH: (206) 490-3800

PROPERTY OWNER: 1
PORT OF PORTLAND
7200 NE AIRPORT WAY
PORTLAND, OR 97218

PROGRAM MANAGER:
ODELIA PACIFIC CORPORATION
BILL HOWARD
(503) 941-6253

CONSTRUCTION PROJECT MANAGER:
ODELIA PACIFIC CORPORATION
BOE BOEDIGHEIMER
(503) 877-0350

SITE ACQUISITION: 1
ODELIA PACIFIC CORPORATION
STEVE BODINE
(503) 544-9695

ZONING / LAND USE:
ODELIA PACIFIC CORPORATION
STEVE BODINE
(503) 544-9695

RF ENGINEER:
JULIO BROWN
T-MOBILE
juliobrown@t-mobile.com

DRAWING INDEX

DWG	DESCRIPTION
T-1	TITLE SHEET
G-1	GENERAL NOTES
A-1	SITE PLAN 1
A-1.1	EXISTING 7TH LEVEL / ROOFTOP PLAN
A-1.2	PROPOSED 7TH LEVEL / ROOFTOP PLAN
A-1.3	EXISTING & PROPOSED ENLARGED SITE PLANS
A-1.4	PROPOSED EQUIPMENT COMPOUND & ANTENNAS
A-2	EXISTING & PROPOSED WEST ELEVATIONS
A-2.1	EXISTING & PROPOSED NORTH ELEVATIONS
A-2.2	PARTIAL PROPOSED ANTENNA ELEVATIONS
A-3	DETAIL SHEET
A-3.1	DETAIL SHEET
A-3.2	DETAIL SHEET
A-3.3	DETAIL SHEET 1
E-1	ELECTRICAL SITE PLAN & NOTES
E-1.1	ELECTRICAL SITE PLANS 1
E-2	SCHEMATIC GROUNDING PLANS & NOTES
E-2.1	GROUNDING DETAILS 1
RF-1	RF DETAILS
RF-2	RF DETAILS
S-1	STRUCTURAL NOTES, PLANS & DETAILS
S-2	STRUCTURAL DETAILS

LEGAL DESCRIPTION

SECTION 01 1N 1E, TL100, 192.67 ACRES.

DRIVING DIRECTIONS

FROM T-MOBILE PORTLAND OFFICE:

HEAD TOWARD NE MT ST HELENS AVE ON NE ALDERWOOD RD.
TURN RIGHT ONTO NE 82ND AVE.
TURN LEFT ONTO NE AIRPORT WAY.
BEAR RIGHT TO STAY ON NE AIRPORT WAY.
BEAR RIGHT TOWARD RENTAL CAR RETURN/SHORT-TERM.
ENTER SHORT TERM PARKING GARAGE.
SITE IS LOCATED ON THE 7TH LEVEL IN THE NORTHWEST CORNER.

PROJECT INFORMATION

CODE INFORMATION:
ZONING CLASSIFICATION: INDUSTRIAL
BUILDING CODE: IBC 2009
CONSTRUCTION TYPE: II-B NON-COMBUSTIBLE
JURISDICTION: CITY OF PORTLAND
PROPOSED BUILDING USE: TELECOMM

MAP TAX LOT: 1
1N2E08-400

AREA OF PARCEL:
20,772,002 SQ. FT. (476.86 ACRES)

GENERAL INFORMATION:
1. PARKING REQUIREMENTS ARE UNCHANGED. (NON ASSIGNED TECH PARKING)
2. TRAFFIC IS UNAFFECTED.
3. NO SIGNAGE IS PROPOSED.

PROJECT DESCRIPTION 1

THIS PROPOSAL IS FOR A NEW UNMANNED TELECOMMUNICATIONS FACILITY, CONSISTING OF THE INSTALLATION OF (1) OUTDOOR SITE SUPPORT CABINET LOCATED WITHIN A PROPOSED 10'-0"x16'-0" FENCED LEASE AREA ON THE 7TH LEVEL / ROOFTOP OF THE SHORT TERM PARKING GARAGE. ALSO THE ADDITION OF (3) TMBXX-6516-R2M & (3) TMZXXX-6516-A3M PANEL ANTENNAS, (3) FXFB UNITS, (3) FRIA UNITS & (3) FRIG UNITS AT THE 7TH LEVEL OF THE EXISTING PARKING STRUCTURE. ALSO THE ADDITION OF (6) 1/2"Ø COAX, (2) HYBRID CABLES & (3) COVP UNITS, (2) NEAR ANTENNAS AND (1) NEAR THE SITE SUPPORT EQUIPMENT.

PROJECT INFORMATION

THIS IS UNSTAFFED AND RESTRICTED EQUIPMENT AND WILL BE USED FOR THE TRANSMISSION OF RADIO SIGNALS FOR THE PURPOSE OF PROVIDING PUBLIC CELLULAR SERVICE. T-MOBILE CERTIFIES THAT THIS TELEPHONE EQUIPMENT FACILITY WILL BE SERVICED ONLY BY T-MOBILE EMPLOYEES AND THE WORK ASSOCIATED WITH ANY EQUIPMENT CANNOT BE PERFORMED BY HANDICAPPED PERSONS. THIS FACILITY WILL BE FREQUENTED ONLY BY SERVICE PERSONNEL FOR REPAIR PURPOSES. PURSUANT TO THE AMERICANS WITH DISABILITIES ACT (ADA), APPENDIX B SECTION 4.11. (5) (B), THIS FACILITY IS EXEMPT FROM THAT ACT.

NO POTABLE WATER SUPPLY TO BE PROVIDED AT THIS LOCATION

NO WASTE WATER OR SOLID WASTE WILL BE GENERATED AT THIS LOCATION.

T-MOBILE MAINTENANCE CREW (ONE PERSON) WILL MAKE AN AVERAGE OF ONE TRIP PER MONTH AT ONE HOUR PER TRIP.

APPROVAL/SIGN OFF OF DRAWINGS

CONSULTANT GROUP SIGN OFF	DATE	INITIAL AND PRINT NAME
OPERATIONS		
DEVELOPMENT MANAGER		
CONSTRUCTION MANAGER		
PROJECT MANAGER		
SITE ACQUISITION		
ZONING		
RF ENGINEER		

REVIEWERS SHALL **CLEARLY PLACE INITIALS** ADJACENT TO EACH REDLINE NOTE AS DRAWINGS ARE BEING REVIEWED

CALL TWO WORKING DAYS BEFORE YOU DIGI
811
NATIONAL UTILITIES UNDERGROUND LOCATE

SAFETY PRECAUTION SHALL BE IMPLEMENTED BY CONTRACTOR(S) AT ALL TRENCHING IN ACCORDANCE WITH CURRENT OSHA STANDARDS

ELECTRIC - RED
SEWER - GREEN
GAS/OIL - YELLOW
SURVEY - PINK
TELCATV - ORANGE
PROPOSED - WHITE
WATER - BLUE

T·Mobile
8960 NE ALDERWOOD RD
PORTLAND, OR 97220
OFFICE (503) 235-0127

PROJECT CONSULTANTS:
ODELIA PACIFIC CORPORATION

PLANS PREPARED BY:
CORNERSTONE ENGINEERING, INC.
16928 WOODINVILLE-REDMOND RD NE, SUITE 210
WOODINVILLE, WA 98072
PHONE: 425.487.1732 FAX: 425.487.1734
EMAIL: cei@cornerstone-engr.com
WWW.CORNERSTONE-ENGR.COM

PROJECT INFO:
PO01871A
PORTLAND AIRPORT
7100 NE AIRPORT WAY
PORTLAND, OR 97218
MULTNOMAH COUNTY

ISSUED FOR:
CONSTRUCTION

REV:	DATE:	ISSUED FOR:	BY:
1	02-13-13	CONSTRUCTION	BMH
0	01-21-13	CONSTRUCTION	LJS
A	12-12-12	CLIENT REVIEW	DMO

DRAWN BY:	CHK.:	APV.:
DMO	JRF	MWO

CURRENT ISSUE DATE:
02-13-13

LICENSURE:
REGISTERED PROFESSIONAL ENGINEER 74534PE OREGON MARCH 9, 2004 MARK W. OLSON
2/13/13
EXPIRATION DATE: 12/31/14

DRAWING INFORMATION:
DO NOT SCALE DRAWINGS. CONTRACTOR MUST VERIFY ALL DIMENSIONS AND ADVISE CONSULTANTS OF ANY ERRORS AND OMISSIONS. ALL PREVIOUS ISSUES OF THIS DRAWING ARE SUPERSEDED BY THE LATEST REVISION. THE INFORMATION CONTAINED IN THIS SET OF DOCUMENTS IS PROPRIETARY BY NATURE. ANY USE OR DISCLOSURE OTHER THAN WHICH IS RELATED TO NAMED CLIENT IS STRICTLY PROHIBITED.

DRAWING TITLE:
TITLE SHEET

DRAWING NUMBER:
T-1 1

CEI JOB NUMBER: 12-20055

2-13-13

GENERAL NOTES:

1. DRAWINGS ARE NOT TO BE SCALED, WRITTEN DIMENSIONS TAKE PRECEDENCE, THIS SET OF DOCUMENTS IS INTENDED TO BE USED FOR DIAGRAMMATIC PURPOSES ONLY, UNLESS NOTED OTHERWISE. THE GENERAL CONTRACTOR'S SCOPE OF WORK SHALL INCLUDE FURNISHING ALL MATERIALS, EQUIPMENT, LABOR, AND ANY REQUIREMENTS DEEMED NECESSARY TO COMPLETE PROJECT AS DESCRIBED IN THE DRAWINGS AND OWNER'S PROJECT MANUAL.

2. PRIOR TO THE SUBMISSION OF BIDS, CONTRACTORS INVOLVED SHALL VISIT THE JOB SITE TO FAMILIARIZE THEMSELVES WITH ALL CONDITIONS AFFECTING THE PROPOSED PROJECT. CONTRACTORS SHALL VISIT THE CONSTRUCTION SITE WITH THE CONSTRUCTION/CONTRACT DOCUMENTS TO VERIFY FIELD CONDITIONS AND CONFIRM THAT THE PROJECT WILL BE ACCOMPLISHED AS SHOWN. PRIOR TO PROCEEDING WITH CONSTRUCTION, ANY ERRORS, OMISSIONS, OR DISCREPANCIES SHALL BE BROUGHT TO THE ATTENTION OF THE ARCHITECT/ENGINEER VERBALLY AND IN WRITING.

3. THE ARCHITECTS/ENGINEERS HAVE MADE EVERY EFFORT TO SET FORTH IN THE CONSTRUCTION AND CONTRACT DOCUMENTS THE COMPLETE SCOPE OF WORK. CONTRACTORS BIDDING THE JOB ARE NEVERTHELESS CAUTIONED THAT MINOR OMISSIONS OR ERRORS IN THE DRAWINGS AND OR SPECIFICATIONS SHALL NOT EXCUSE SAID CONTRACTOR FROM COMPLETING THE PROJECT AND IMPROVEMENTS IN ACCORDANCE WITH THE INTENT OF THESE DOCUMENTS. THE BIDDER SHALL BEAR THE RESPONSIBILITY OF NOTIFYING (IN WRITING) THE ARCHITECT/ENGINEER OF ANY CONFLICTS, ERRORS, OR OMISSIONS PRIOR TO SUBMISSION OF CONTRACTOR'S PROPOSAL. IN THE EVENT OF DISCREPANCIES THE CONTRACTOR SHALL PRICE THE MORE COSTLY OR EXTENSIVE WORK, UNLESS DIRECTED OTHERWISE.

4. THE CONTRACTOR SHALL SUPERVISE AND DIRECT THE PROJECT DESCRIBED IN THE CONTRACT DOCUMENTS. THE CONTRACTOR SHALL BE SOLELY RESPONSIBLE FOR ALL CONSTRUCTION MEANS, METHODS, TECHNIQUES, SEQUENCES, AND PROCEDURES FOR COORDINATING ALL PORTIONS OF THE WORK UNDER THE CONTRACT.

5. THE CONTRACTOR SHALL INSTALL ALL EQUIPMENT AND MATERIALS ACCORDING TO MANUFACTURER'S/VENDOR'S SPECIFICATIONS UNLESS NOTED OTHERWISE OR WHERE LOCAL CODES OR ORDINANCES TAKE PRECEDENCE.

6. ALL WORK PERFORMED ON THE PROJECT AND MATERIALS INSTALLED SHALL BE IN STRICT ACCORDANCE WITH ALL APPLICABLE CODES, REGULATIONS, AND ORDINANCES. CONTRACTOR SHALL GIVE ALL NOTICES AND COMPLY WITH ALL LAWS, ORDINANCES, RULES, REGULATIONS AND LAWFUL ORDERS OF ANY PUBLIC AUTHORITY, MUNICIPAL AND UTILITY COMPANY SPECIFICATIONS, AND LOCAL AND STATE JURISDICTIONAL CODES BEARING ON THE PERFORMANCE OF THE WORK.

7. GENERAL CONTRACTOR SHALL PROVIDE, AT THE PROJECT SITE, A FULL SET OF CONSTRUCTION DOCUMENTS UPDATED WITH THE LATEST REVISIONS AND ADDENDA OR CLARIFICATIONS FOR USE BY ALL PERSONNEL INVOLVED WITH THE PROJECT. THIS SET IS A VALID CONTRACT DOCUMENT ONLY IF THE TITLE SHEET IS STAMPED "FOR CONSTRUCTION" AND EACH SUCCESSIVE SHEET BEARS THE ARCHITECT'S SIGNED WET STAMP.

8. THE STRUCTURAL COMPONENTS OF ADJACENT CONSTRUCTION OR FACILITIES ARE NOT TO BE ALTERED BY THIS CONSTRUCTION PROJECT UNLESS NOTED OTHERWISE.

9. SEAL ALL PENETRATIONS THROUGH FIRE-RATED AREAS WITH U.L. LISTED OR FIRE MARSHALL APPROVED MATERIALS IF APPLICABLE TO THIS FACILITY AND OR PROJECT SITE.

10. CONTRACTOR TO PROVIDE A PORTABLE FIRE EXTINGUISHER WITH A RATING OF NOT LESS THAN 2-A OR 2-A10BC WITHIN 75 FEET TRAVEL DISTANCE TO ALL PORTIONS OF PROJECT AREA DURING CONSTRUCTION.

11. CONTRACTOR SHALL MAKE NECESSARY PROVISIONS TO PROTECT EXISTING IMPROVEMENTS, EASEMENTS, PAVING, CURBING, ETC. DURING CONSTRUCTION. UPON COMPLETION OF WORK, CONTRACTOR SHALL REPAIR ANY DAMAGE THAT MAY HAVE OCCURRED DUE TO CONSTRUCTION ON OR ABOUT THE PROPERTY.

12. CONTRACTOR SHALL KEEP GENERAL WORK AREA CLEAN AND HAZARD FREE DURING CONSTRUCTION AND DISPOSE OF ALL DIRT, DEBRIS, AND RUBBISH. CONTRACTOR SHALL REMOVE EQUIPMENT NOT SPECIFIED AS REMAINING ON THE PROPERTY OR PREMISES. SITE SHALL BE LEFT IN CLEAN CONDITION AND FREE FROM PAINT SPOTS, DUST, OR SMUDGES OF ANY NATURE.

13. THE GENERAL CONTRACTOR SHALL RECEIVE WRITTEN AUTHORIZATION TO PROCEED WITH CONSTRUCTION PRIOR TO STARTING WORK ON ANY ITEM NOT CLEARLY DEFINED BY THE CONSTRUCTION DRAWINGS/CONTRACT DOCUMENTS.

14. THE CONTRACTOR SHALL PERFORM WORK DURING OWNER'S PREFERRED HOURS TO AVOID DISTURBING NORMAL BUSINESS.

15. THE CONTRACTOR SHALL PROVIDE THE CLIENT PROPER INSURANCE CERTIFICATES NAMING CLIENT AS ADDITIONAL INSURED, AND CLIENT PROOF OF LICENSE(S) AND PE & PD INSURANCE.

16. CONTRACTOR SHALL BE RESPONSIBLE FOR SCHEDULING AND COORDINATING ALL INSPECTIONS.

17. CAUTION! CALL BEFORE YOU DIG! BURIED UTILITIES EXIST IN THE AREA AND UTILITY INFORMATION SHOWN MAY NOT BE COMPLETE. CONTACT THE ONE-CALL UTILITY LOCATE SERVICE A MINIMUM OF 48 HOURS PRIOR TO CONSTRUCTION. DIAL 811

18. CONTRACTOR TO DOCUMENT ALL WORK PERFORMED WITH PHOTOGRAPHS AND SUBMIT TO CLIENT ALONG WITH REDLINED CONSTRUCTION SET.

19. CONTRACTOR TO DOCUMENT ALL CHANGES MADE IN THE FIELD BY MARKING UP (REDLINING) THE APPROVED CONSTRUCTION SET AND SUBMITTING THE REDLINED SET TO THE CLIENT UPON COMPLETION.

20. FOR COLLOCATION SITES: CONTACT TOWER OWNER REPRESENTATIVE FOR PARTICIPATION IN BID WALK.

21. GENERAL CONTRACTOR IS TO COORDINATE ALL POWER INSTALLATION WITH POWER COMPANY AS REQUIRED. CONTRACTOR TO REPORT POWER INSTALLATION COORDINATION SOLUTION(S) TO NETWORK CARRIER REPRESENTATIVE, PROJECT CONSTRUCTION MANAGER AND ARCHITECT.

22. ANY SUBSTITUTIONS OF MATERIALS AND/OR EQUIPMENT, MUST BE APPROVED BY CLIENT CONSTRUCTION MANAGER.

23. IN THE CASE OF ROOFTOP SOLUTIONS FOR EQUIPMENT AND/OR ANTENNA FRAMES WHERE PENETRATION OF EXISTING ROOFING MATERIALS OCCUR, THE GENERAL CONTRACTOR SHALL COORDINATE WITH BUILDING OWNER AND BUILDING ROOFING CONTRACTOR OF RECORD FOR INSTALLATION, PATCH, REPAIR OR ANY AUGMENTATION TO THE ROOF, AND HAVE THE WORK GUARANTEED UNDER THE ROOFING CONTRACTOR'S WARRANTY FOR MOISTURE PENETRATION OR AND OTHER FUTURE BREACH OF ROOFING INTEGRITY.

24. IN THE CASE OF ROOFTOP SOLUTIONS WITH THE INSTALLATION OF ANTENNAS WITHIN CONCEALED (SHROUDED) SUPPORT FRAMES OR TRIPODS, THE GENERAL CONTRACTOR SHALL COORDINATE WITH THE FRP DESIGNER/FABRICATOR TO ENSURE THAT THE FINAL FRP SHROUD IS SIMULATING (IN APPEARANCE) DESIGNATED EXISTING EXTERIOR BUILDING FACADE MATERIALS, TEXTURES, AND COLORS. THE CONTRACTOR SHALL FURTHERMORE ENSURE THE USE OF COUNTERSUNK FASTENERS IN ALL FRP CONSTRUCTION. WHEN PHOTO SIMULATIONS ARE PROVIDED, THE CONTRACTOR SHALL ENSURE THAT FINAL CONSTRUCTION REPRESENTS WHAT IS INDICATED IN PHOTO SIMULATIONS. SHOP DRAWINGS SHALL BE PROVIDED TO THE GENERAL CONTRACTOR, CONSTRUCTION COORDINATOR, AND ARCHITECT PRIOR TO FABRICATION AND CONSTRUCTION.

GENERAL NOTES (CONT'D):

25. IN THE CASE OF ROOFTOP SOLUTIONS FOR EQUIPMENT AND/OR ANTENNA FRAMES WHERE ANCHORING TO A CONCRETE ROOF SLAB IS REQUIRED, CONTRACTORS SHALL CONFIRM (PRIOR TO SUBMITTING BID) WITH CONSULTING CONSTRUCTION COORDINATOR AND ARCHITECT THE PRESENCE OF POST TENSION TENDONS WITHIN THE ROOF SLAB - RESULTING FROM AN UNDOCUMENTED DESIGN CHANGE IN THE EXISTING BUILDING "AS-BUILT DRAWING SET" - HAVING INDICATED AN ORIGINAL DESIGN SOLUTION OF REINFORCED CONCRETE W/ EMBEDDED STEEL REBAR. IN THE EVENT POST TENSION SLAB SOLUTION IS PRESENT, CONTRACTOR SHALL INCLUDE PROVISIONS FOR X-RAY PROCEDURES (INCLUDED IN BID) FOR ALL PENETRATION AREAS WHERE ANCHORING OCCURS.

26. GENERAL & SUB CONTRACTORS SHALL USE STAINLESS STEEL METAL LOCKING TIES FOR ALL CABLE TRAY TIE DOWNS AND ALL OTHER GENERAL TIE DOWNS (WHERE APPLICABLE). PLASTIC ZIP TIES SHALL NOT BE PERMITTED FOR USE ON CLIENT PROJECTS. RECOMMENDED MANUFACTURE SHALL BE: PANDUIT CORP. METAL LOCKING TIES MODEL NO. MLT4S-CP UNDER SERIES-304 (OR EQUAL). PANDUIT PRODUCT DISTRIBUTED BY TRIARC OF TACOMA, WA.

DESIGN CRITERIA:

THE STRUCTURAL DESIGN OF THIS PROJECT IS IN ACCORDANCE WITH THE INTERNATIONAL BUILDING CODE 2009 WITH OREGON STRUCTURAL SPECIALTY CODE AMENDMENTS (OSSC 2010)

1. DESIGN LOADS:
   DESIGN DATA FOR CITY OF PORTLAND, OR:

-ROOF SNOW LOAD	25 psf
-BASIC WIND SPEED	85 MPH (3 SEC GUST)
-WIND EXPOSURE	C

CODE COMPLIANCE:

ALL WORK AND MATERIALS SHALL BE PERFORMED AND INSTALLED IN ACCORDANCE WITH THE CURRENT EDITIONS OF THE FOLLOWING CODES AS ADOPTED BY THE LOCAL GOVERNING AUTHORITIES. NOTHING ON THESE PLANS IS TO BE CONSTRUCTED TO PERMIT WORK NOT CONFORMING TO THESE CODES:

2009 INTERNATIONAL BUILDING CODE	2009 INTERNATIONAL RESIDENTIAL CODE
2009 INTERNATIONAL MECHANICAL CODE	2009 INTERNATIONAL FUEL GAS CODE
2009 NFPA 54 - NATIONAL FUEL GAS CODE (PROPANE INSTALLATIONS ONLY)	2009 INTERNATIONAL FIRE CODE
	2009 UNIFORM PLUMBING CODE
2008 NFPA 58 - LIQUEFIED PETROLEUM GAS CODE (PROPANE INSTALLATIONS ONLY)	2008 NFPA 70 NATIONAL ELECTRICAL CODE
	2012 NATIONAL ELECTRIC SAFETY CODE
LOCAL BUILDING CODE ORDINANCES	2009 ANSI / TIA / EIA - 222 - G
2009 WASHINGTON STATE ENERGY CODE	NFPA-101 - LIFE SAFETY CODE
ICC/ANSI A117.1-2006	

2009 INTERNATIONAL EXISTING BUILDING CODE WITH STATE WIDE AMENDMENTS FOUND IN THE IBC

CONCRETE NOTES:

1. ALL CONCRETE CONSTRUCTION SHALL BE IN ACCORDANCE WITH ACI-318.

2. CONCRETE SHALL BE MIXED, PROPORTIONED, CONVEYED AND PLACED IN ACCORDANCE WITH CHAPTER 19 OF THE IBC 2009. STRENGTHS AT 28 DAYS AND MIX CRITERIA SHALL BE AS FOLLOWS.

TYPE OF CONSTRUCTION	28 DAY STRENGTHS (f'c)	W/C RATIO	MINIMUM CEMENT CONTENT PER CUBIC YARD
A. SLABS ON GRADE TOPPING SLABS CONCRETE PIERS	3,000 PSI	≤ .45	5 1/2 SACKS
B. ALL STRUCTURAL CONCRETE EXCEPT WALLS	4,000 PSI	≤ .45	6 1/2 SACKS
C. CONCRETE WALLS	4,000 PSI	≤ .45	6 1/2 SACKS

CEMENT SHALL BE ASTM C150, PORTLAND CEMENT TYPE II U.N.O.

3. THE GENERAL CONTRACTOR SHALL SUPERVISE AND BE RESPONSIBLE FOR THE METHODS AND PROCEDURES OF CONCRETE PLACEMENT.

4. ALL CONCRETE WITH SURFACES EXPOSED TO STANDING WATER SHALL BE AIR-ENTRAINED WITH AN AIR-ENTRAINING AGENT CONFORMING TO ASTM C260, C494, C618, C989 AND C1017. TOTAL AIR CONTENT SHALL BE IN ACCORDANCE WITH TABLE 1904.2.1 OF THE IBC 2009.

5. REINFORCING STEEL SHALL CONFORM TO ASTM A615 (INCLUDING SUPPLEMENT S1), GRADE 60, fy=60,000 PSI. EXCEPTIONS: ANY BARS SPECIFICALLY SO NOTED ON THE DRAWINGS SHALL BE GRADE 40, fy=40,000 PSI. GRADE 60 REINFORCING BARS INDICATED ON DRAWINGS TO BE WELDED SHALL CONFORM TO ASTM A706. REINFORCING COMPLYING WITH ASTM A615(S1) MAY BE WELDED ONLY IF MATERIAL PROPERTY REPORTS INDICATING CONFORMANCE WITH WELDING PROCEDURES SPECIFIED IN A.W.S. D14 ARE SUBMITTED.

6. REINFORCING STEEL SHALL BE DETAILED (INCLUDING HOOKS AND BENDS) IN ACCORDANCE WITH ACI 315 AND 318. LAP ALL CONTINUOUS REINFORCEMENT AT LEAST 30 BAR DIAMETERS OR A MINIMUM OF 2'-0". PROVIDE CORNER BARS AT ALL WALL AND FOOTING INTERSECTIONS. LAP CORNER BARS AT LEAST 30 BAR DIAMETERS OR A MINIMUM OF 2'-0". LAP ADJACENT MATS OF WELDED WIRE FABRIC A MINIMUM OF 8" AT SIDES AND ENDS.

7. WELDED WIRE FABRIC SHALL CONFORM TO ASTM A-185.

8. SPIRAL REINFORCEMENT SHALL BE PLAIN WIRE CONFORMING TO ASTM A615, GRADE 60, fy=60,000 PSI.

9. NO BARS PARTIALLY EMBEDDED IN HARDENED CONCRETE SHALL BE FIELD BENT UNLESS SPECIFICALLY SO DETAILED OR APPROVED BY THE CONSULTANT.

10. CONCRETE PROTECTION (COVER) FOR REINFORCING STEEL SHALL BE AS FOLLOWS:

FOOTINGS AND OTHER UNFORMED SURFACES, EARTH FACE		3"
FORMED SURFACES EXPOSED TO EARTH OR WEATHER	(#6 BARS OR LARGER)	2"
	(#5 BARS OR SMALLER)	1 1/2"
		3/4"

11. SLABS AND WALLS (INTERIOR FACE)

12. BARS SHALL BE SUPPORTED ON CHAIRS OR DOBIE BRICKS.

13. ANCHOR BOLTS TO CONFORM TO ASTM A307.

14. NON-SHRINK GROUT SHALL BE FURNISHED BY AN APPROVED MANUFACTURER AND SHALL BE MIXED AND PLACED IN STRICT ACCORDANCE WITH THE MANUFACTURER'S PUBLISHED RECOMMENDATIONS. GROUT STRENGTH SHALL BE AT LEAST EQUAL TO THE MATERIAL ON WHICH IT IS PLACED (3,000 PSI MINIMUM).

15. ALL EXPANSION ANCHORS TO BE HILTI BRAND. ADHESIVE ANCHORS REQUIRE TESTING TO CONFIRM CAPACITY UNLESS WAIVED BY ENGINEER.

STRUCTURAL STEEL NOTES:

1. SHOP DRAWINGS FOR STRUCTURAL STEEL SHALL BE SUBMITTED TO THE CONSULTANT FOR REVIEW PRIOR TO FABRICATION.

2. STRUCTURAL STEEL DESIGN, FABRICATION AND ERECTION (INCLUDING FIELD WELDING, HIGH STRENGTH FIELD BOLTING, EXPANSION BOLTS, AND THREADED EXPANSION ANCHORS) SHALL BE BASED ON THE A.I.S.I. "SPECIFICATION FOR THE DESIGN, FABRICATION, AND ERECTION OF STRUCTURAL STEEL FOR BUILDINGS" LATEST EDITION. SUPERVISION SHALL BE IN ACCORDANCE WITH IBC 2009 CHAPTER 22, BY A QUALIFIED TESTING AGENCY DESIGNATED BY THE CONSULTANT. THE CONSULTANT SHALL BE FURNISHED WITH A COPY OF ALL INSPECTION REPORTS AND TEST RESULTS.

3. STRUCTURAL STEEL SHALL CONFORM TO THE FOLLOWING REQUIREMENTS:

TYPE OF MEMBER	
A. WIDE FLANGE SHAPE	ASTM A992, Fy 50 KSI
B. OTHER SHAPE, PLATES AND ROD	ASTM A36, Fy 36 KSI
C. PIPE COLUMNS	ASTM A53, Fy 35 KSI
D. STRUCTURAL TUBING	ASTM A500, Fy 46 KSI
E. ANCHOR BOLTS	ASTM A307
F. CONNECTION BOLTS	ASTM A325

4. ALL MATERIAL TO BE HOT DIPPED GALVANIZED AFTER FABRICATION PER A123/A123M-00.

5. ALL WELDING SHALL BE IN CONFORMANCE WITH A.I.S.I. AND AWS STANDARDS AND SHALL BE PERFORMED BY W.A.B.O. CERTIFIED WELDERS USING E70 XX ELECTRODES. ONLY PREQUALIFIED WELDS (AS DEFINED BY AWS) SHALL BE USED. WELDING OF GRADE 60 REINFORCING BARS (IF REQUIRED) SHALL BE PERFORMED USING LOW HYDROGEN ELECTRODES. WELDING OF GRADE 40 REINFORCING BARS (IF REQUIRED) SHALL BE PERFORMED USING E70 XX ELECTRODES. WELDING WITHIN 4" OF COLD BENDS IN REINFORCING STEEL IS NOT PERMITTED. SEE REINFORCING NOTE FOR MATERIAL REQUIREMENTS OF WELDED BARS.

6. COLD-FORMED STEEL FRAMING MEMBERS SHALL BE OF THE SHAPE, SIZE, AND GAGE SHOWN ON THE PLANS. PROVIDE MINIMUM SECTION PROPERTIES INDICATED. ALL COLD-FORMED STEEL FRAMING SHALL CONFORM TO THE A.I.S.I. "SPECIFICATION FOR THE DESIGN OF COLD-FORMED STEEL STRUCTURAL MEMBERS."

7. BOLTED CONNECTIONS SHALL USE BEARING TYPE ASTM A325 BOLTS (3/4" DIA.) AND SHALL HAVE A MINIMUM OF TWO BOLTS UNLESS NOTED OTHERWISE.

8. NON-STRUCTURAL CONNECTIONS FOR STEEL GRATING MAY USE 5/8" DIA. ASTM A307 BOLTS UNLESS NOTED OTHERWISE.

9. ALL STEEL WORK SHALL BE PAINTED IN ACCORDANCE WITH THE DESIGN & CONSTRUCTION SPECIFICATION AND IN ACCORDANCE WITH ASTM A38 UNLESS NOTED OTHERWISE.

10. ALL WELDS TO BE 1/4" FILLET UNLESS NOTED OTHERWISE.

11. TOUCH UP ALL FIELD DRILLING AND WELDING WITH 2 COATS OF GALVACON (ZINC RICH PAINT) OR APPROVED EQUAL.

TOWER/POLE NOTES:

1. VERIFICATION THAT THE PROPOSED TOWER/POLE CAN SUPPORT THE PROPOSED ANTENNA LOADING IS TO BE DONE BY OTHERS.

2. PROVIDE SUPPORTS FOR THE ANTENNA COAX CABLES TO THE ELEVATION OF ALL INITIAL AND FUTURE ANTENNAS. ANTENNA COAX CABLES ARE TO BE SUPPORTED AND RESTRAINED AT THE CENTERS SUITABLE TO THE MANUFACTURER'S REQUIREMENTS.

ABBREVIATED ROOFTOP SAFETY PROCEDURES (WHEN APPLICABLE):

(AS PER "ACCIDENT PREVENTION PROGRAM" - BY PERMISSION OF WREN CONSTRUCTION, INC. - 03/01/99)

FALL PROTECTION METHODS AND EQUIPMENT
ROOF TOP INSTALLATIONS

1. FOR WORK IS BEING PERFORMED WITHIN 25' OF AN UNPROTECTED ROOF EDGE, THE CONSTRUCTION SUPERVISOR SHALL DESIGNATE A TRAINED SAFETY MONITOR TO OBSERVE THE MOVEMENTS AND ACTIVITIES OF THE CONSTRUCTION WORKERS.

2. SAFETY MONITOR SHALL WARN CONSTRUCTION WORKERS OF HAZARDS (I.E., BACKING UP TOWARD A ROOF EDGE, ETC.) OR UNSAFE ACTIVITIES. THE SAFETY MONITOR MUST BE ON THE SAME ROOF AND WITHIN VISUAL AND VERBAL DISTANCE OF THE CONSTRUCTION WORKERS.

3. CONSTRUCTION INVOLVING WORKERS TO APPROACH WITHIN 6' OR LESS OF AN UNPROTECTED ROOF EDGE, REQUIRES WORKERS TO USE SAFETY LINE.

4. SAFETY LINE SHALL BE MINIMUM ½" DIAMETER NYLON, WITH A NOMINAL TENSILE STRENGTH OF 5400 LBS.

5. SAFETY LINE SHALL BE ATTACHED TO A SUBSTANTIAL MEMBER OF THE STRUCTURE.

6. SAFETY LINE LENGTH SHALL BE SET ALLOWING CONSTRUCTION WORKER TO REACH EDGE OF ROOF, BUT NOT BEYOND.

7. SAFETY BELTS SHALL BE WORN BY ALL CONSTRUCTION WORKERS.

8. MONTHLY SAFETY INSPECTION AND MAINTENANCE OF THE FALL PROTECTION EQUIPMENT SHALL OCCUR BY THE SAFETY COMMITTEE REPRESENTATIVES, INCLUDING:

   INSPECTION OF CONSTRUCTION AREA FOR HAZARDS
   USE OF AN INSPECTION CHECKLIST
   INTERVIEWING COWORKERS REGARDING SAFETY CONCERNS
   REPORTING AND DOCUMENTING ANY HAZARDS
   REPORTING HAZARDS TO THE SAFETY COMMITTEE FOR CONSIDERATION
   POSTING RESULTS OF INSPECTION AND ANY ACTION TAKEN
   RECEIVING AN UNBIASED REVIEW OF ONE'S OWN WORK AREA BY ANOTHER COWORKER SAFETY REPRESENTATIVE

REFER TO ROOFTOP WORK AREA SAFETY PROTOCOL
NATIONAL ASSOCIATION OF TOWER ERECTORS 2000 PUBLICATION

REFERENCED OSHA REGULATION/STANDARDS SHALL BE REVIEWED BY TOWER ERECTORS, EQUIPMENT INSTALLERS, AND TOWER/ROOF TOP CONTRACTORS/SUBCONTRACTORS
29 CFR 1926.500 - SCOPE, APPLICATION, AND DEFINITIONS
29 CFR 1926.501 - DUTY TO HAVE FALL PROTECTION
19 CFR 1926.502 - FALL PROTECTION SYSTEMS CRITERIA AND PRACTICES

SYMBOLS AND ABBREVIATIONS

A/C	AIR CONDITIONING	MAX	MAXIMUM
AGL	ABOVE GRADE LEVEL	MECH	MECHANICAL
APPROX	APPROXIMATELY	MTL	METAL
		MFR	MANUFACTURE
BLDG	BUILDING	MGR	MANAGER
BLK	BLOCKING	MIN	MINIMUM
B.O.	BOTTOM OF	MISC	MISCELLANEOUS
B.O.S.	BOTTOM OF STEEL		
		N/A	NOT APPLICABLE
CLG	CEILING	NIC	NOT IN CONTRACT
CLR	CLEAR	N.S.	NEAR SIDE
CMU	CONCRETE MASONRY UNIT	NTS	NOT TO SCALE
CONC	CONCRETE		
CONST	CONSTRUCTION	O.C.	ON CENTER
CONT	CONTINUOUS	O.D.	OUTSIDE DIAMETER
		O/H	OVERHEAD
DBL	DOUBLE		
DIAØ	DIAMETER	PLCS	PLACES
DIAG	DIAGONAL	PLYWD	PLYWOOD
DN	DOWN	PROJ	PROJECT
DET	DETAIL	PROP	PROPERTY
DWG	DRAWING	PSF	POUNDS PER SQUARE FOOT
		PSI	POUNDS PER SQUARE INCH
EA	EACH	PT	PRESSURE TREATED
EL	ELEVATION		
ELEC	ELECTRICAL	RAD	RADIUS
EQ	EQUAL	REQ	REQUIRED
EQUIP	EQUIPMENT	RM	ROOM
E.W.	EACH WAY	RO	ROUGH OPENING
EXT	EXTERIOR		
		SCH	SCHEDULE
FIN	FINISH	SHT	SHEET
FLUOR	FLUORESCENT	SIM	SIMILAR
FLR	FLOOR	SPEC	SPECIFICATION
F.S.	FAR SIDE	SF	SQUARE FOOT
FT	FOOT	SS	STAINLESS STEEL
		STL	STEEL
GA	GAUGE	STRUCT	STRUCTURAL
GALV	GALVANIZED	STD	STANDARD
G.C.	GENERAL CONTRACTOR	SQ FT	SQUARE FOOT
GRND	GROUND	SQ IN	SQUARE INCH
GYP BD	GYPSUM WALL BOARD	SUSP	SUSPENDED
HORZ	HORIZONTAL	THK	THICK
HR	HOUR	THRU	THROUGH
HT	HEIGHT	TNNG	TINNED
HVAC	HEATING VENTILATION AIR CONDITIONING	T.O.	TOP OF
		T.O.S.	TOP OF STEEL
I.D.	INSIDE DIAMETER	TYP	TYPICAL
IN	INCH	UNO	UNLESS NOTED OTHERWISE
INFO	INFORMATION		
INSUL	INSULATION	VERT	VERTICAL
INT	INTERIOR	V.I.F.	VERIFY IN FIELD
IBC	INTERNATIONAL BUILDING CODE		
		W/	WITH
LBS	POUNDS	W/O	WITHOUT
		WP	WATER PROOF

⅊	PLATE		CHAIN-LINK FENCE
℄	CENTERLINE		WOOD FENCE
(E)	EXISTING	T	TELEPHONE
		P	POWER
# / X-#	DETAIL NUMBER / SHEET NUMBER		GROUND WIRE
		COAX	COAXIAL CABLE

City of Portland
REVIEWED FOR CODE COMPLIANCE
APR 08 2013
Permit Number

SPECIAL INSPECTIONS:

SPECIAL INSPECTIONS IN ACCORDANCE WITH IBC 2009 SECTION 1704.

SOILS/GEOTECHNICAL:
- ☐SHORING INSTALLATION AND MONITORING
- ☐OBSERVE AND MONITOR EXCAVATION
- ☐VERIFY SOIL BEARING ____psf BEARING
- ☐SUBSURFACE DRAINAGE PLACEMENT
- ☐VERIFY FILL MATERIAL AND COMPACTION
- ☐VERIFY CONDITIONS AS ANTICIPATED
- ☐PILE PLACEMENT (AUGER CAST/DRIVEN PILE)
- ☐OTHER

REINFORCED CONCRETE:
- ☐REINFORCING STEEL AND CONCRETE PLACEMENT
- ☐PRESTRESSED/PRECAST CONCRETE FABRICATION AND ERECTION
- ☐BATCH PLANT INSPECTION
- ☐SHOTCRETE
- ☐GROUTING
- ☐OTHER

STRUCTURAL STEEL:
- ☐FABRICATION AND SHOP WELDS
- ☐ERECTION AND FIELD WELDS AND BOLTING
- ☐OTHER ____

STRUCTURAL ALUMINUM:
- ☐FABRICATION AND SHOP WELDS
- ☐ERECTION AND FIELD WELDS AND BOLTING
- ☐OTHER ____

STRUCTURAL MASONRY:
- ☐CONTINUOUS
- ☐PERIODIC
- ☐____

OTHER: ____

ANCHORING TO CONCRETE:
- ☐BOLTS INSTALLED IN CONCRETE
- ☐POST-INSTALLATION ADHESIVE ANCHORS
- ☒POST-INSTALLATION MECHANICAL ANCHORS

T·Mobile

8960 NE ALDERWOOD RD
PORTLAND, OR 97220
OFFICE (503) 235-0127

PROJECT CONSULTANTS:

PACIFIC CORPORATION

PLANS PREPARED BY:

CORNERSTONE ENGINEERING, INC.
16928 WOODINVILLE-REDMOND RD NE, SUITE 210
WOODINVILLE, WA 98072
PHONE: 425.487.1732 FAX: 425.487.1734
EMAIL: cei@cornerstone-engr.com
WWW.CORNERSTONE-ENGR.COM

PROJECT INFO:

PO01871A

PORTLAND AIRPORT

7100 NE AIRPORT WAY
PORTLAND, OR 97218
MULTNOMAH COUNTY

ISSUED FOR:

CONSTRUCTION

REV:	DATE:	ISSUED FOR:	BY:
1	02-13-13	CONSTRUCTION	BMH
0	01-21-13	CONSTRUCTION	LJS
A	12-12-12	CLIENT REVIEW	DMO

DRAWN BY:	CHK.:	APV.:
DMO	JRF	MWO

CURRENT ISSUE DATE: 02-13-13

LICENSURE:

REGISTERED PROFESSIONAL ENGINEER 74636PE OREGON MARCH 9, 2004 MARK W. OLSON
2/13/13
EXPIRATION DATE: 12/31/14

DRAWING INFORMATION:

DO NOT SCALE DRAWINGS. CONTRACTOR MUST VERIFY ALL DIMENSIONS AND ADVISE CONSULTANTS OF ANY ERRORS AND OMISSIONS. ALL PREVIOUS ISSUES OF THIS DRAWING ARE SUPERSEDED BY THE LATEST REVISION. THE INFORMATION CONTAINED IN THIS SET OF DOCUMENTS IS PROPRIETARY BY NATURE. ANY USE OR DISCLOSURE OTHER THAN WHICH IS RELATED TO NAMED CLIENT IS STRICTLY PROHIBITED.

DRAWING TITLE: GENERAL NOTES

DRAWING NUMBER: G-1 | 1

CEI JOB NUMBER: 12-20055

THIS IS NOT A SURVEY

ALL INFORMATION AND TRUE NORTH HAVE BEEN OBTAINED FROM EXISTING DRAWINGS AND ARE APPROXIMATE.

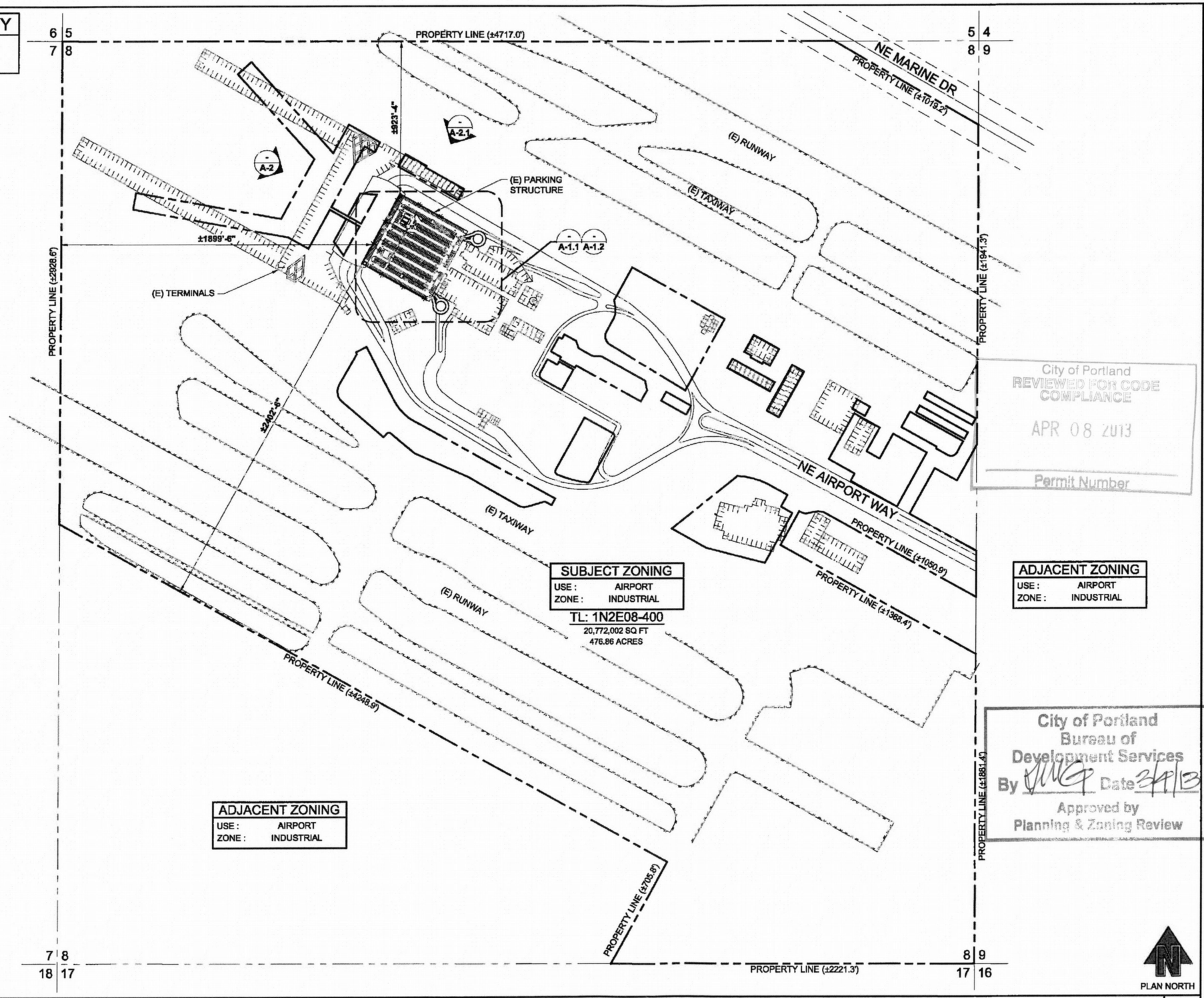

ADJACENT ZONING	
USE :	AIRPORT
ZONE :	INDUSTRIAL

SUBJECT ZONING	
USE :	AIRPORT
ZONE :	INDUSTRIAL

TL: 1N2E08-400
20,772,002 SQ FT
476.86 ACRES

ADJACENT ZONING	
USE :	AIRPORT
ZONE :	INDUSTRIAL

ADJACENT ZONING	
USE :	AIRPORT
ZONE :	INDUSTRIAL

City of Portland
REVIEWED FOR CODE COMPLIANCE
APR 08 2013
Permit Number

City of Portland
Bureau of Development Services
By JWG Date 3/19/13
Approved by Planning & Zoning Review

SITE PLAN

22x34 SCALE: 1" = 300'-0" | 11x17 SCALE: 1" = 600'-0"

1

·T··Mobile·

8960 NE ALDERWOOD RD
PORTLAND, OR 97220
OFFICE (503) 235-0127

PROJECT CONSULTANTS:

PACIFIC CORPORATION

PLANS PREPARED BY:

CORNERSTONE ENGINEERING, INC.
16928 WOODINVILLE-REDMOND RD NE, SUITE 210
WOODINVILLE, WA 98072
PHONE: 425.487.1732 FAX: 425.487.1734
EMAIL: cei@cornerstone-engr.com
WWW.CORNERSTONE-ENGR.COM

PROJECT INFO:

PO01871A

PORTLAND AIRPORT

7100 NE AIRPORT WAY
PORTLAND, OR 97218
MULTNOMAH COUNTY

ISSUED FOR:

CONSTRUCTION

REV:	DATE:	ISSUED FOR:	BY:
1	02-13-13	CONSTRUCTION	BMH
0	01-21-13	CONSTRUCTION	LJS
A	12-12-12	CLIENT REVIEW	DMO

DRAWN BY:	CHK.:	APV.:
DMO	JRF	MWO

CURRENT ISSUE DATE:

02-13-13

LICENSURE:

REGISTERED PROFESSIONAL ENGINEER 74538PE OREGON MARCH 9, 2001 MARK W. OLSON
2/13/13
EXPIRATION DATE: 12/31/14

DRAWING INFORMATION:

DO NOT SCALE DRAWINGS. CONTRACTOR MUST VERIFY ALL DIMENSIONS AND ADVISE CONSULTANTS OF ANY ERRORS AND OMISSIONS. ALL PREVIOUS ISSUES OF THIS DRAWING ARE SUPERSEDED BY THE LATEST REVISION. THE INFORMATION CONTAINED IN THIS SET OF DOCUMENTS IS PROPRIETARY BY NATURE. ANY USE OR DISCLOSURE OTHER THAN WHICH IS RELATED TO NAMED CLIENT IS STRICTLY PROHIBITED.

DRAWING TITLE:

SITE PLAN

DRAWING NUMBER:

1 A-1 1

CEI JOB NUMBER: 12-20055

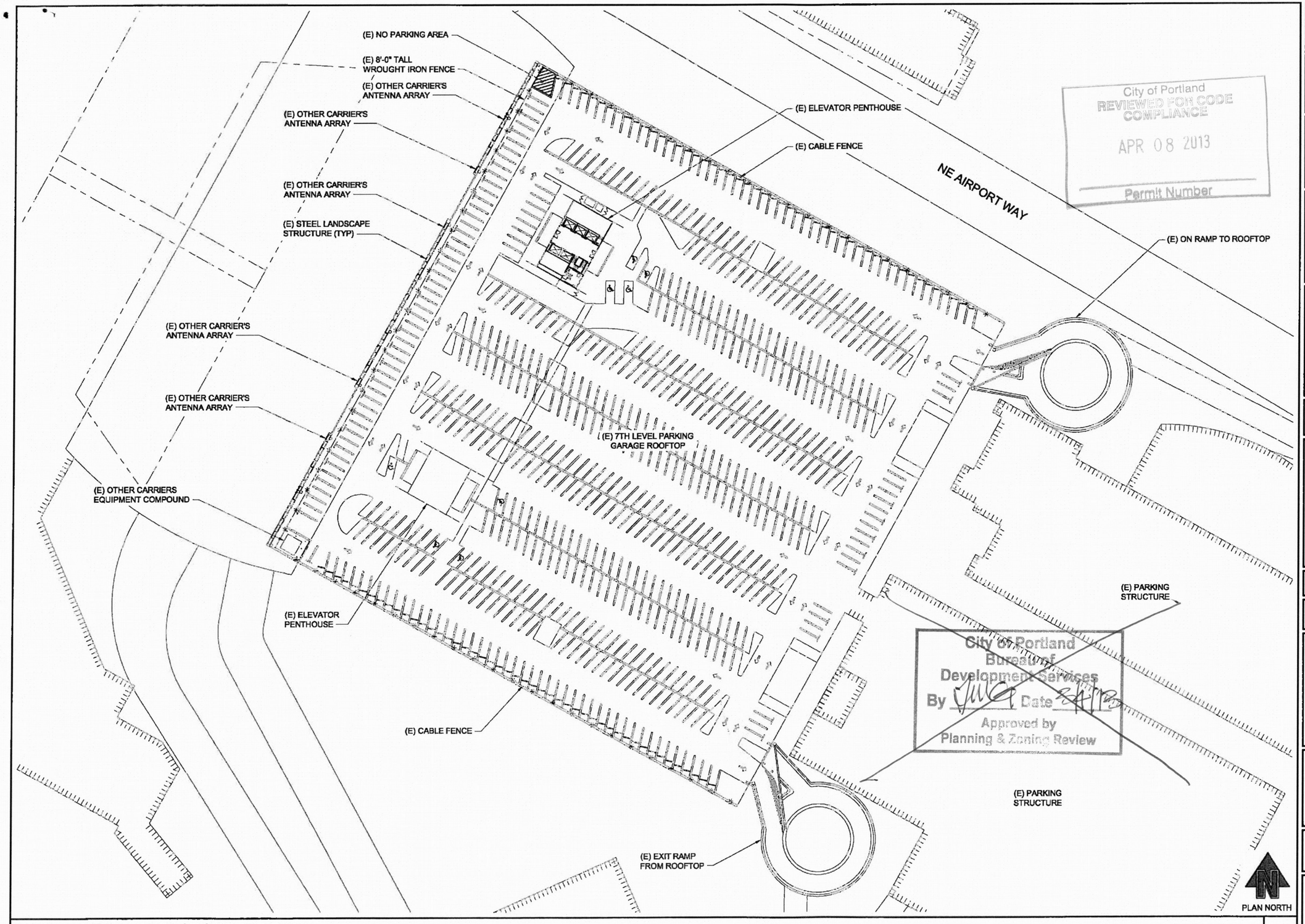

EXISTING 7TH LEVEL / ROOFTOP PLAN

22x34 SCALE: 1" = 40'-0" | 11x17 SCALE: 1" = 80'-0"

1

T-Mobile

8960 NE ALDERWOOD RD
PORTLAND, OR 97220
OFFICE (503) 235-0127

PROJECT CONSULTANTS:

PACIFIC CORPORATION

PLANS PREPARED BY:

CORNERSTONE ENGINEERING, INC.
18928 WOODINVILLE-REDMOND RD NE, SUITE 210
WOODINVILLE, WA 98072
PHONE: 425.487.1732 FAX: 425.487.1734
EMAIL: cei@cornerstone-engr.com
WWW.CORNERSTONE-ENGR.COM

PROJECT INFO:

PO01871A

PORTLAND AIRPORT

7100 NE AIRPORT WAY
PORTLAND, OR 97218
MULTNOMAH COUNTY

ISSUED FOR:

CONSTRUCTION

REV:	DATE:	ISSUED FOR:	BY:
1	02-13-13	CONSTRUCTION	BMH
0	01-21-13	CONSTRUCTION	LJS
A	12-12-12	CLIENT REVIEW	DMO

DRAWN BY:	CHK.:	APV.:
DMO	JRF	MWO

CURRENT ISSUE DATE:

02-13-13

LICENSURE:

REGISTERED PROFESSIONAL ENGINEER 74538PE OREGON MARCH 9, 2004 MARK W. OLSON 2/13/13

EXPIRATION DATE: 12/31/14

DRAWING INFORMATION:

DO NOT SCALE DRAWINGS. CONTRACTOR MUST VERIFY ALL DIMENSIONS AND ADVISE CONSULTANTS OF ANY ERRORS AND OMISSIONS. ALL PREVIOUS ISSUES OF THIS DRAWING ARE SUPERSEDED BY THE LATEST REVISION. THE INFORMATION CONTAINED IN THIS SET OF DOCUMENTS IS PROPRIETARY BY NATURE. ANY USE OR DISCLOSURE OTHER THAN WHICH IS RELATED TO NAMED CLIENT IS STRICTLY PROHIBITED.

DRAWING TITLE:

EXISTING 7TH LEVEL / ROOFTOP PLAN

DRAWING NUMBER:

A-1.1 | 1

CEI JOB NUMBER: 12-20055

NOTES:

1. ALL ANTENNAS AND ASSOCIATED EQUIPMENT IS TO BE PAINTED TO MATCH THE EXISTING BUILDING AESTHETIC
2. X-RAY OR SCAN CONCRETE SLAB FOR STEEL REINFORCING PRIOR TO ANY PENETRATION
3. FIELD VERIFY LOCATION OF STEEL FRAMING PRIOR TO MAKING ANY PENETRATIONS IN THE CONCRETE DECK
4. ALL T-MOBILE EQUIPMENT & CABLING TO BE TAGGED APPROPRIATELY PER DETAIL 10/A-3.2

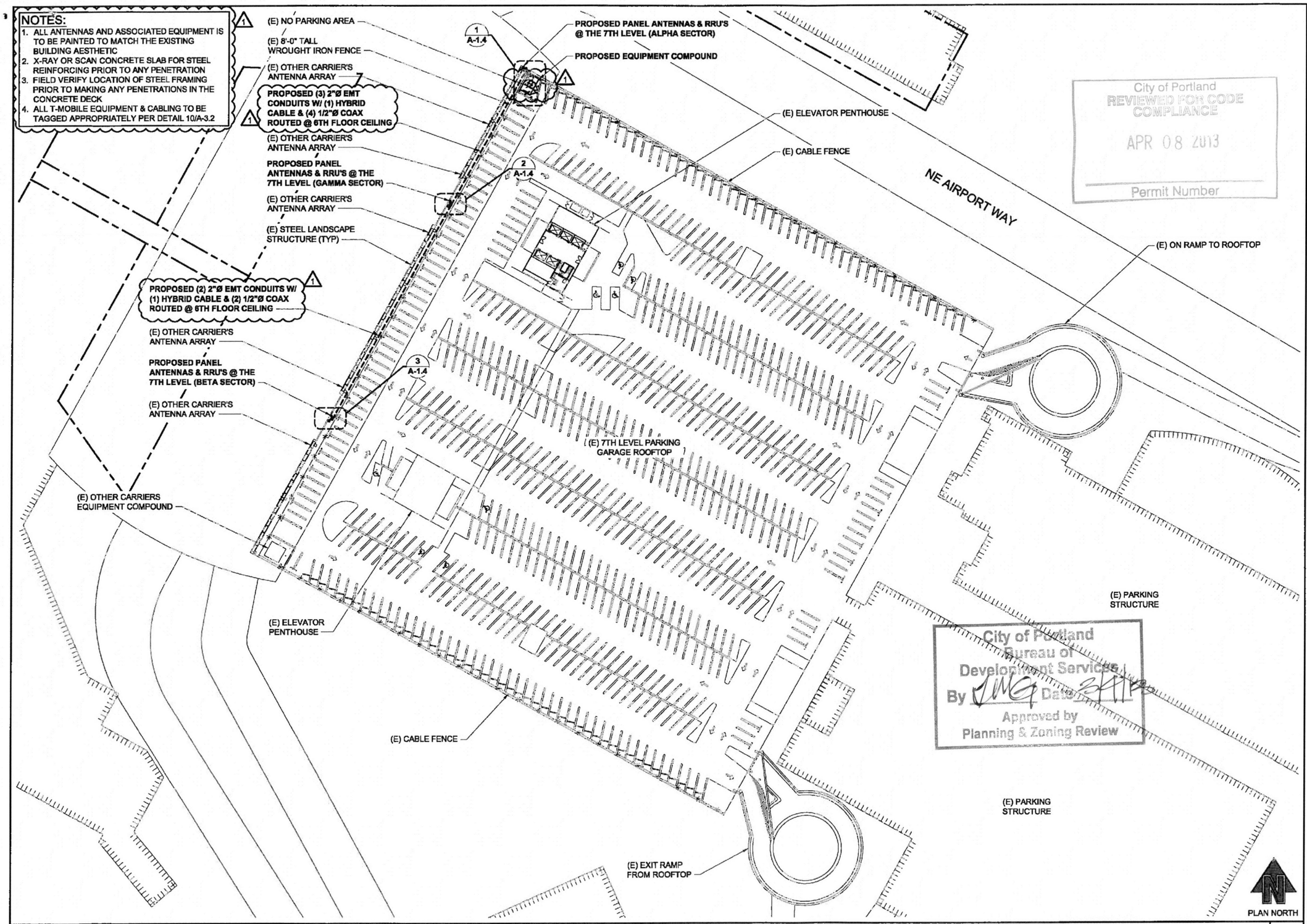

City of Portland
REVIEWED FOR CODE COMPLIANCE
APR 08 2013
Permit Number

City of Portland
Bureau of Development Services
By JMG Date 3/11/13
Approved by
Planning & Zoning Review

PROPOSED 7TH LEVEL / ROOFTOP PLAN

22x34 SCALE: 1" = 40'-0" | 11x17 SCALE: 1" = 80'-0"

1

T-Mobile
8960 NE ALDERWOOD RD
PORTLAND, OR 97220
OFFICE (503) 233-0127

PROJECT CONSULTANTS:
PACIFIC CORPORATION

PLANS PREPARED BY:
CORNERSTONE ENGINEERING, INC.
16928 WOODINVILLE-REDMOND RD NE, SUITE 210
WOODINVILLE, WA 98072
PHONE: 425.487.1732 FAX: 425.487.1734
EMAIL: oai@cornerstone-engr.com
WWW.CORNERSTONE-ENGR.COM

PROJECT INFO:

PO01871A

PORTLAND AIRPORT

7100 NE AIRPORT WAY
PORTLAND, OR 97218
MULTNOMAH COUNTY

ISSUED FOR:

CONSTRUCTION

REV:	DATE:	ISSUED FOR:	BY:
1	02-13-13	CONSTRUCTION	BMH
0	01-21-13	CONSTRUCTION	LJS
A	12-12-12	CLIENT REVIEW	DMO

DRAWN BY:	CHK.:	APV.:
DMO	JRF	MWO

CURRENT ISSUE DATE: 02-13-13

LICENSURE:

REGISTERED PROFESSIONAL ENGINEER 14538PE OREGON MARCH 9, 2004 MARK W. OLSON
2/15/13
EXPIRATION DATE: 12/31/14

DRAWING INFORMATION:

DO NOT SCALE DRAWINGS. CONTRACTOR MUST VERIFY ALL DIMENSIONS AND ADVISE CONSULTANTS OF ANY ERRORS AND OMISSIONS. ALL PREVIOUS ISSUES OF THIS DRAWING ARE SUPERSEDED BY THE LATEST REVISION. THE INFORMATION CONTAINED IN THIS SET OF DOCUMENTS IS PROPRIETARY BY NATURE. ANY USE OR DISCLOSURE OTHER THAN WHICH IS RELATED TO NAMED CLIENT IS STRICTLY PROHIBITED.

DRAWING TITLE:

PROPOSED 7TH LEVEL / ROOFTOP PLAN

DRAWING NUMBER:

A-1.2 | 1

CEI JOB NUMBER: 12-20055

NOTES:

1. ALL ANTENNAS AND ASSOCIATED EQUIPMENT IS TO BE PAINTED TO MATCH THE EXISTING BUILDING AESTHETIC
2. X-RAY OR SCAN CONCRETE SLAB FOR STEEL REINFORCING PRIOR TO ANY PENETRATION
3. FIELD VERIFY LOCATION OF STEEL FRAMING PRIOR TO MAKING ANY PENETRATIONS IN THE CONCRETE DECK
4. ALL T-MOBILE EQUIPMENT & CABLING TO BE TAGGED APPROPRIATELY PER DETAIL 10/A-3.2

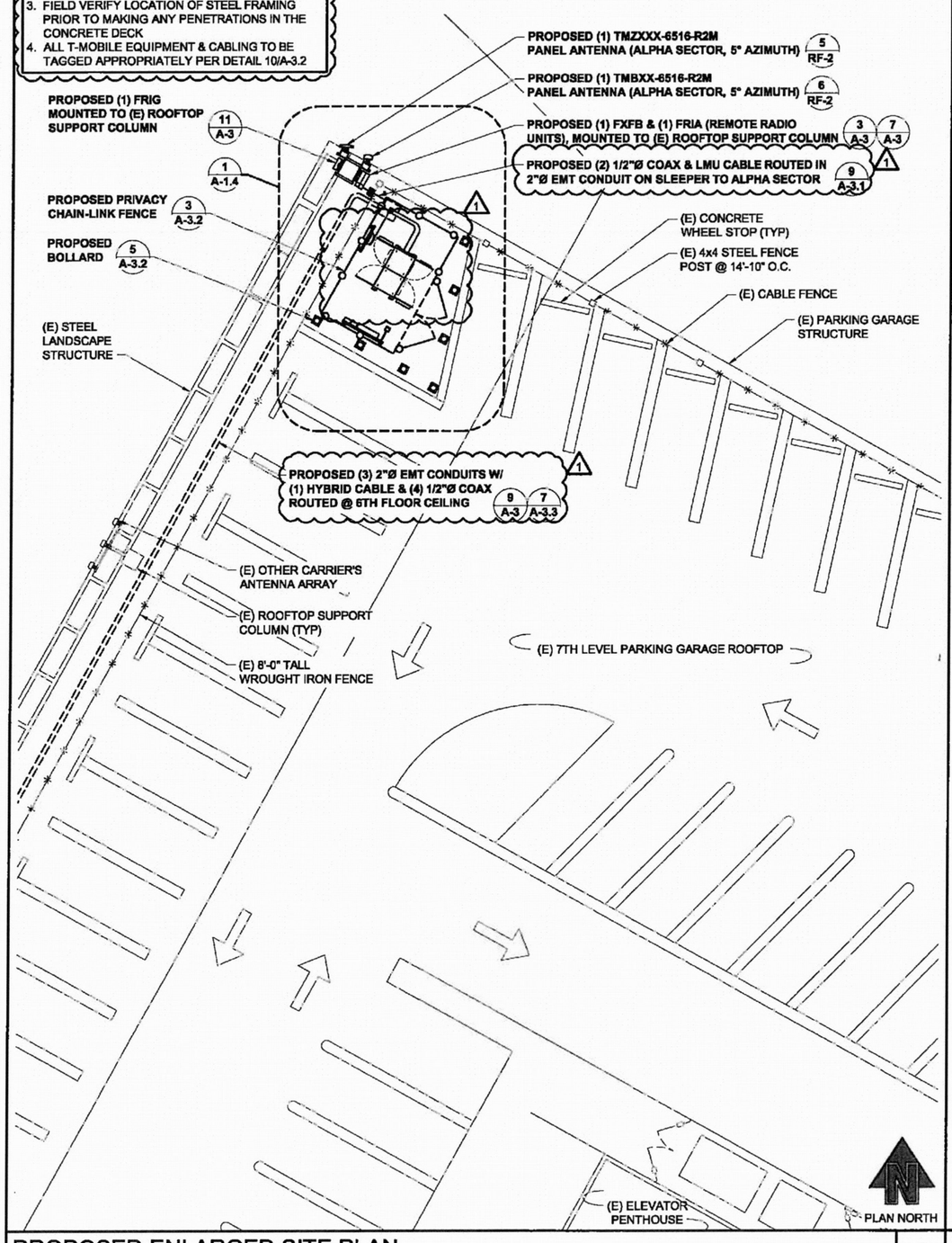

PROPOSED ENLARGED SITE PLAN

22x34 SCALE: 1/8" = 1'-0" | 11x17 SCALE: 1/16" = 1'-0"

2

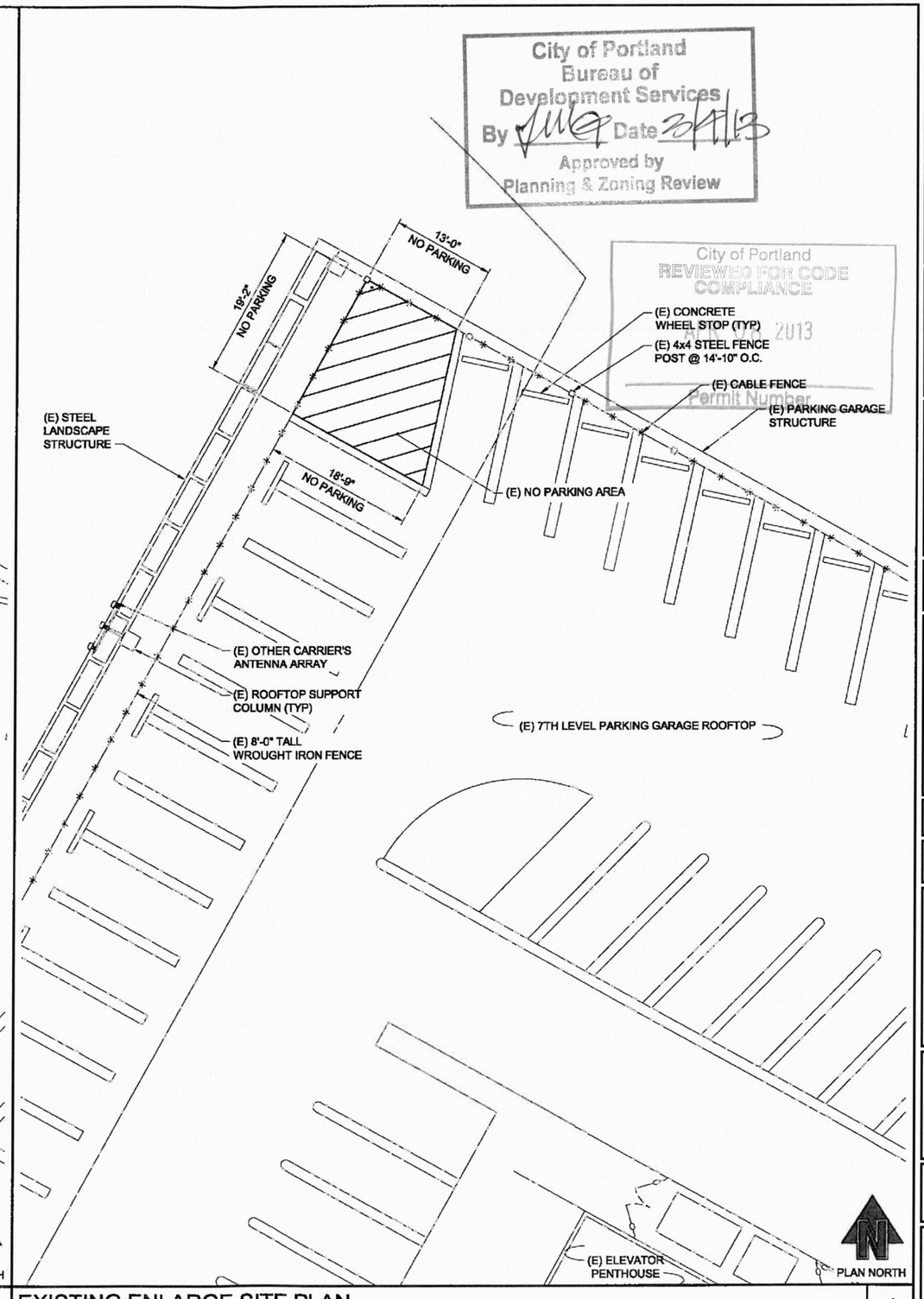

EXISTING ENLARGE SITE PLAN

22x34 SCALE: 1/8" = 1'-0" | 11x17 SCALE: 1/16" = 1'-0"

1

T-Mobile

8960 NE ALDERWOOD RD
PORTLAND, OR 97220
OFFICE (503) 235-0127

PROJECT CONSULTANTS:

PACIFIC CORPORATION

PLANS PREPARED BY:

CORNERSTONE ENGINEERING, INC.
16928 WOODINVILLE-REDMOND RD NE, SUITE 210
WOODINVILLE, WA 98072
PHONE: 425.487.1732 FAX: 425.487.1734
EMAIL: cei@cornerstone-engr.com
WWW.CORNERSTONE-ENGR.COM

PROJECT INFO:

PO01871A

PORTLAND AIRPORT

7100 NE AIRPORT WAY
PORTLAND, OR 97218
MULTNOMAH COUNTY

ISSUED FOR:

CONSTRUCTION

REV:	DATE:	ISSUED FOR:	BY:
1	02-13-13	CONSTRUCTION	BMH
0	01-21-13	CONSTRUCTION	LJS
A	12-12-12	CLIENT REVIEW	DMO

DRAWN BY:	CHK.:	APV.:
DMO	JRF	MWO

CURRENT ISSUE DATE:

02-13-13

LICENSURE:

REGISTERED PROFESSIONAL ENGINEER 74183PE OREGON MARCH 9, 2001 MARK W. OLSON 2/13/13

EXPIRATION DATE: 12/31/14

DRAWING INFORMATION:

DO NOT SCALE DRAWINGS. CONTRACTOR MUST VERIFY ALL DIMENSIONS AND ADVISE CONSULTANTS OF ANY ERRORS AND OMISSIONS. ALL PREVIOUS ISSUES OF THIS DRAWING ARE SUPERSEDED BY THE LATEST REVISION. THE INFORMATION CONTAINED IN THIS SET OF DOCUMENTS IS PROPRIETARY BY NATURE. ANY USE OR DISCLOSURE OTHER THAN WHICH IS RELATED TO NAMED CLIENT IS STRICTLY PROHIBITED.

DRAWING TITLE:

EXISTING & PROPOSED ENLARGED SITE PLANS

DRAWING NUMBER:

A-1.3 | 1

CEI JOB NUMBER: 12-20055

NOTES:
1. ALL ANTENNAS AND ASSOCIATED EQUIPMENT IS TO BE PAINTED TO MATCH THE EXISTING BUILDING AESTHETIC
2. X-RAY OR SCAN CONCRETE SLAB FOR STEEL REINFORCING PRIOR TO ANY PENETRATION
3. FIELD VERIFY LOCATION OF STEEL FRAMING PRIOR TO MAKING ANY PENETRATIONS IN THE CONCRETE DECK
4. ALL T-MOBILE EQUIPMENT & CABLING TO BE TAGGED APPROPRIATELY PER DETAIL 10/A-3.2

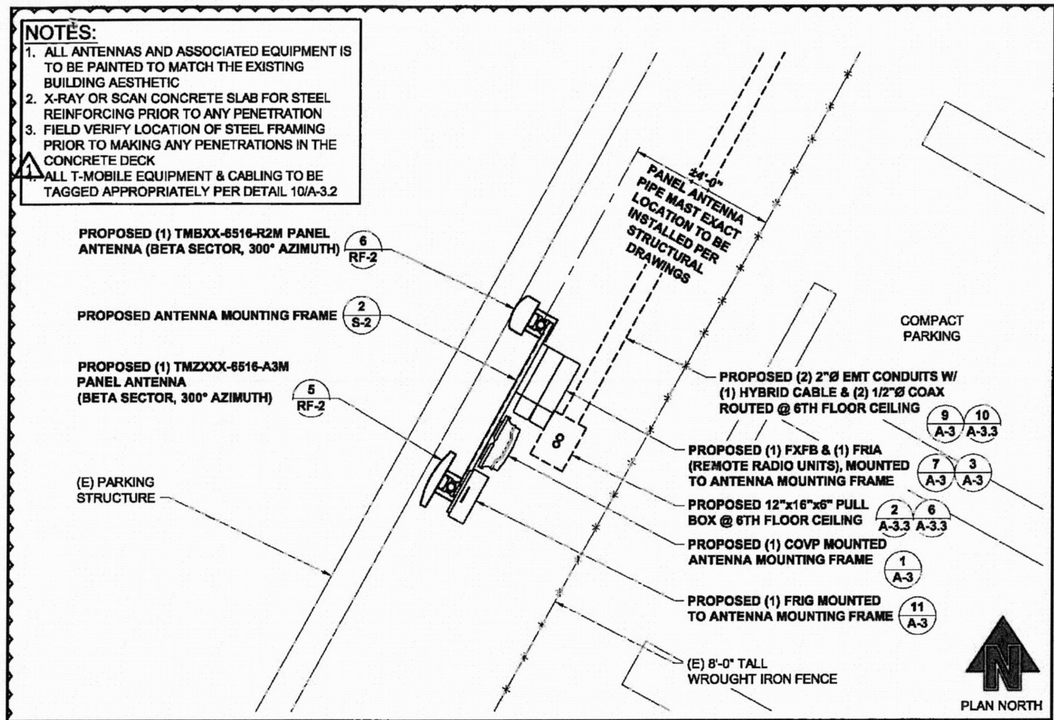

PROPOSED BETA SECTOR

3

22x34 SCALE: 1/2" = 1'-0" | 11x17 SCALE: 1/4" = 1'-0"

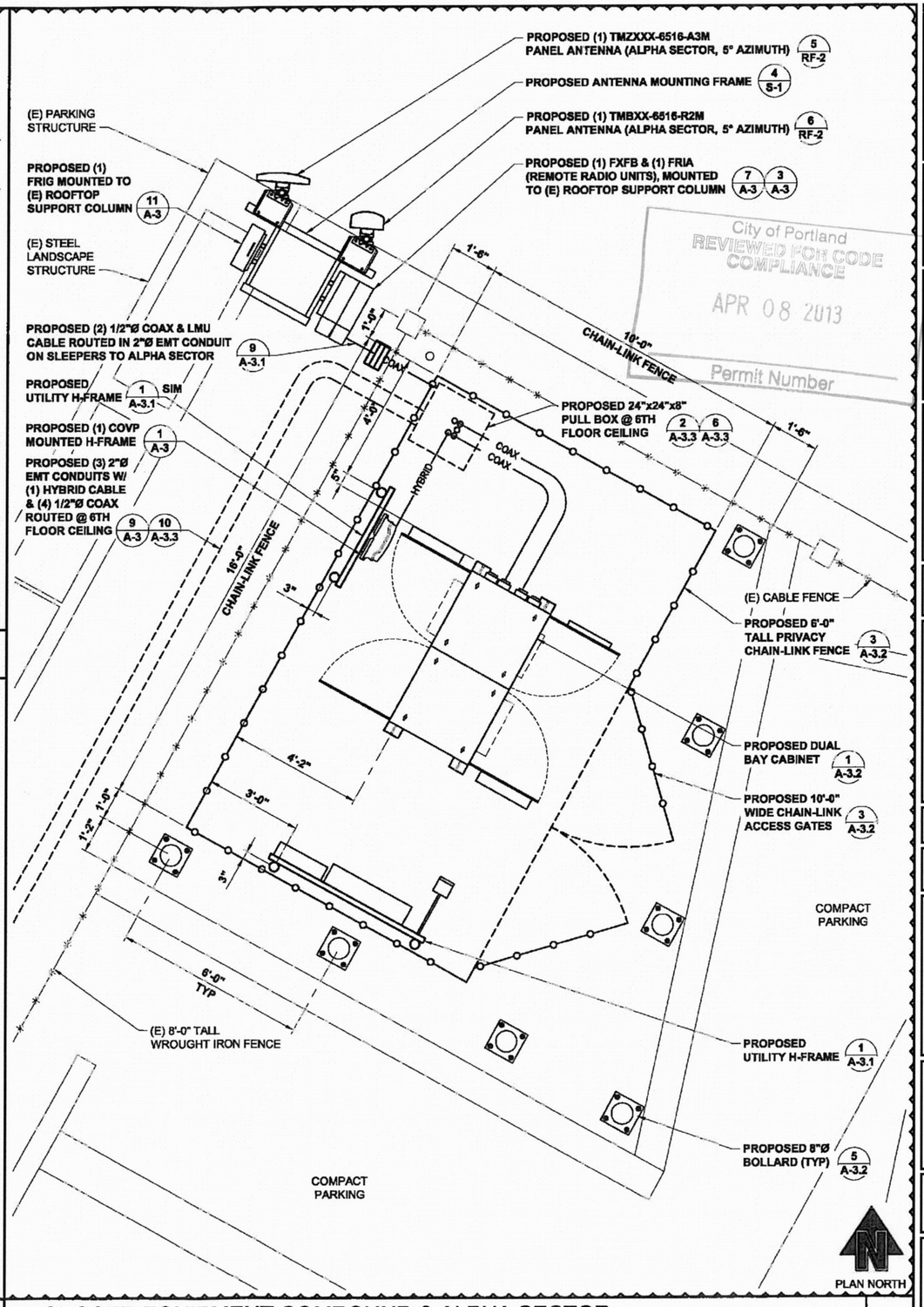

City of Portland
REVIEWED FOR CODE COMPLIANCE
APR 08 2013
Permit Number

PROPOSED EQUIPMENT COMPOUND & ALPHA SECTOR

1

22x34 SCALE: 1/2" = 1'-0" | 11x17 SCALE: 1/4" = 1'-0"

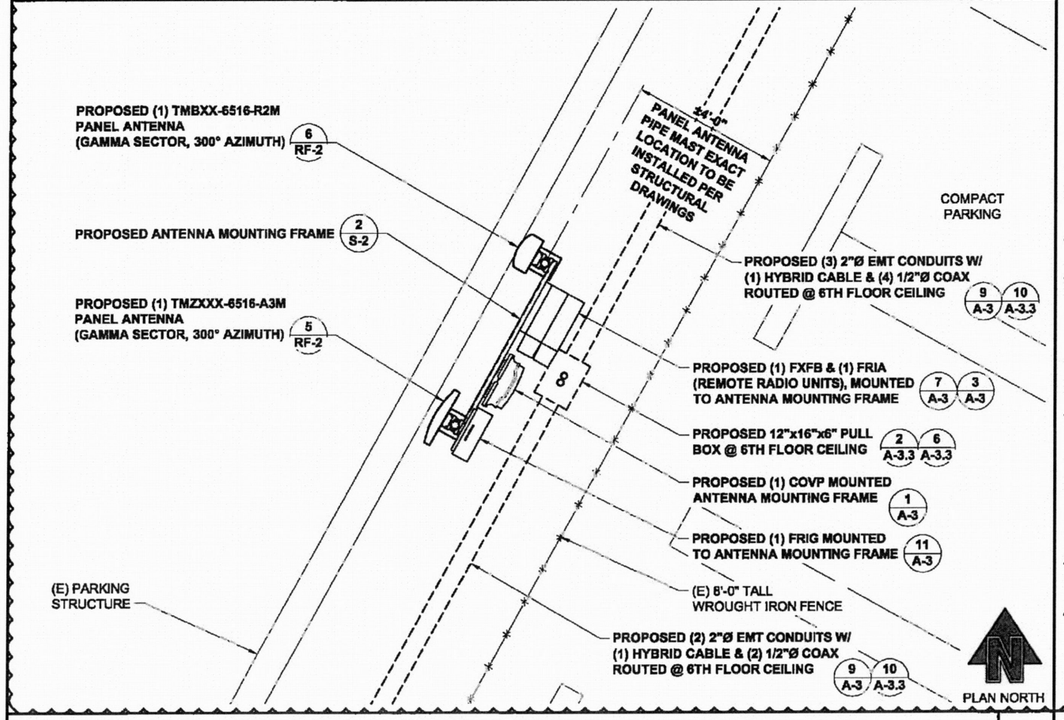

PROPOSED GAMMA SECTOR

2

22x34 SCALE: 1/2" = 1'-0" | 11x17 SCALE: 1/4" = 1'-0"

T · Mobile ·

8960 NE ALDERWOOD RD
PORTLAND, OR 97220
OFFICE (503) 235-0127

PROJECT CONSULTANTS:

PACIFIC CORPORATION

PLANS PREPARED BY:

CORNERSTONE ENGINEERING, INC.
16928 WOODINVILLE-REDMOND RD NE, SUITE 210
WOODINVILLE, WA 98072
PHONE: 425.487.1732 FAX: 425.487.1734
EMAIL: cei@cornerstone-engr.com
WWW.CORNERSTONE-ENGR.COM

PROJECT INFO:

PO01871A

PORTLAND AIRPORT

7100 NE AIRPORT WAY
PORTLAND, OR 97218
MULTNOMAH COUNTY

ISSUED FOR:

CONSTRUCTION

REV:	DATE:	ISSUED FOR:	BY:
1	02-13-13	CONSTRUCTION	BMH
0	01-21-13	CONSTRUCTION	LJS
A	12-12-12	CLIENT REVIEW	DMO

DRAWN BY:	CHK.:	APV.:
DMO	JRF	MWO

CURRENT ISSUE DATE:

02-13-13

LICENSURE:

REGISTERED PROFESSIONAL ENGINEER 74538PE OREGON MARCH 9, 2004 MARK W. OLSON
2/13/13
EXPIRATION DATE: 12/31/14

DRAWING INFORMATION:

DO NOT SCALE DRAWINGS. CONTRACTOR MUST VERIFY ALL DIMENSIONS AND ADVISE CONSULTANTS OF ANY ERRORS AND OMISSIONS. ALL PREVIOUS ISSUES OF THIS DRAWING ARE SUPERSEDED BY THE LATEST REVISION. THE INFORMATION CONTAINED IN THIS SET OF DOCUMENTS IS PROPRIETARY BY NATURE. ANY USE OR DISCLOSURE OTHER THAN WHICH IS RELATED TO NAMED CLIENT IS STRICTLY PROHIBITED.

DRAWING TITLE:

PROPOSED EQUIPMENT COMPOUND & ANTENNAS

DRAWING NUMBER:

A-1.4 | 1

CEI JOB NUMBER: 12-20055

NOTES:
1. ALL ANTENNAS AND ASSOCIATED EQUIPMENT IS TO BE PAINTED TO MATCH THE EXISTING BUILDING AESTHETIC
2. X-RAY OR SCAN CONCRETE SLAB FOR STEEL REINFORCING PRIOR TO ANY PENETRATION
3. FIELD VERIFY LOCATION OF STEEL FRAMING PRIOR TO MAKING ANY PENETRATIONS IN THE CONCRETE DECK
4. ALL T-MOBILE EQUIPMENT & CABLING TO BE TAGGED APPROPRIATELY PER DETAIL 10/A-3.2

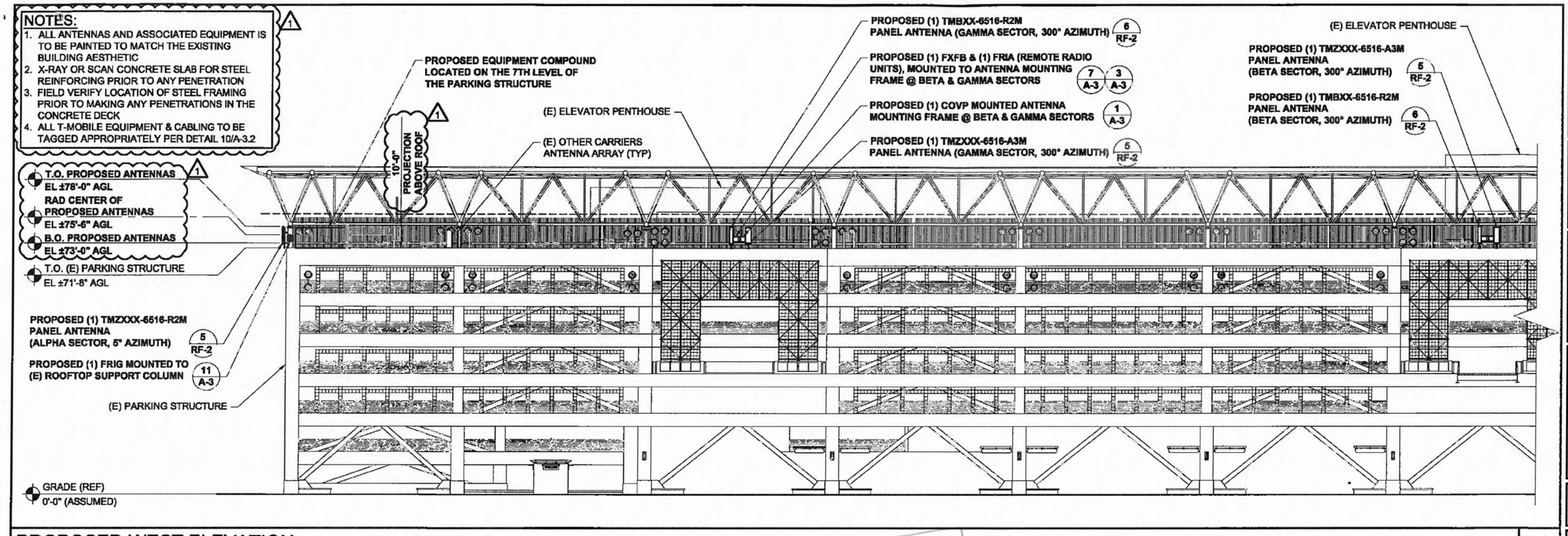

PROPOSED WEST ELEVATION

22x34 SCALE: 1/16" = 1'-0" | 11x17 SCALE: 1/32" = 1'-0"

2

City of Portland REVIEWED FOR CODE COMPLIANCE APR 08 2013 Permit Number

City of Portland Bureau of Development Services By JMG Date 3/19/13 Approved by Planning & Zoning Review

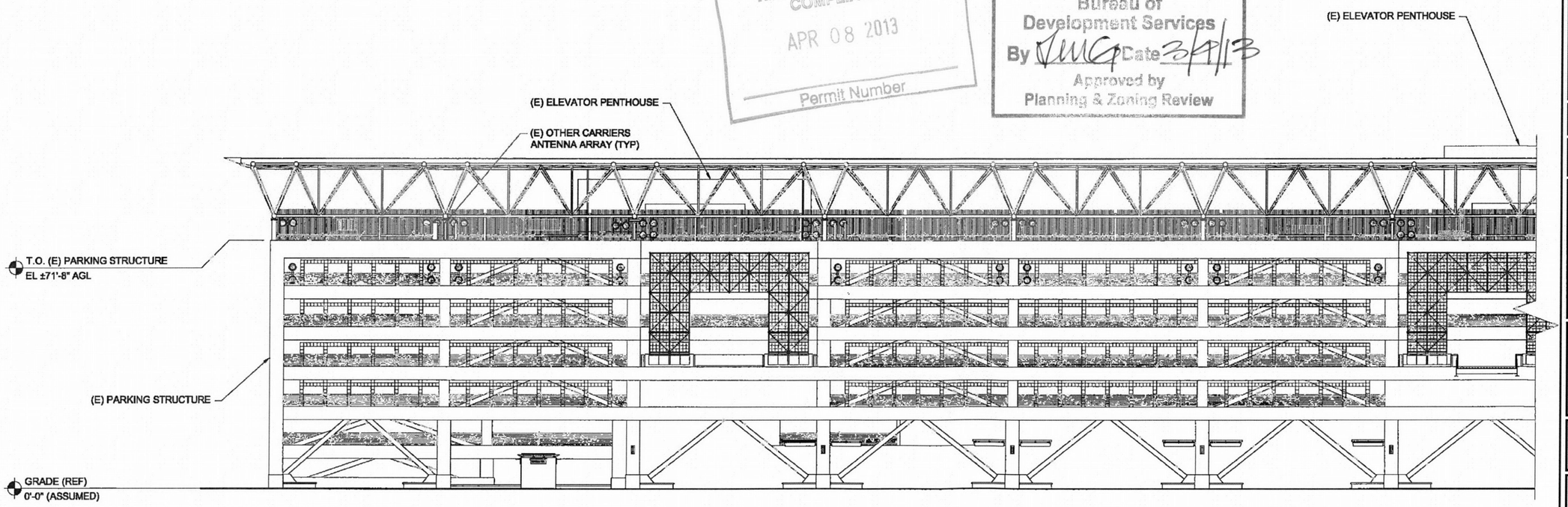

EXISTING WEST ELEVATION

22x34 SCALE: 1/16" = 1'-0" | 11x17 SCALE: 1/32" = 1'-0"

1

T-Mobile
8960 NE ALDERWOOD RD
PORTLAND, OR 97220
OFFICE (503) 235-0127

PROJECT CONSULTANTS:
SIGELO PACIFIC CORPORATION

PLANS PREPARED BY:
CORNERSTONE ENGINEERING, INC.
18928 WOODINVILLE-REDMOND RD NE, SUITE 210
WOODINVILLE, WA 98072
PHONE: 425.487.1732 FAX: 425.487.1734
EMAIL: cei@cornerstone-engr.com
WWW.CORNERSTONE-ENGR.COM

PROJECT INFO:

PO01871A

PORTLAND AIRPORT

7100 NE AIRPORT WAY
PORTLAND, OR 97218
MULTNOMAH COUNTY

ISSUED FOR:

CONSTRUCTION

REV:	DATE:	ISSUED FOR:	BY:
1	02-13-13	CONSTRUCTION	BMH
0	01-21-13	CONSTRUCTION	LJS
A	12-12-12	CLIENT REVIEW	DMO

DRAWN BY:	CHK.:	APV.:
DMO	JRF	MWO

CURRENT ISSUE DATE: 02-13-13

LICENSURE:

REGISTERED PROFESSIONAL ENGINEER 74538PE OREGON MARCH 9, 2004 MARK W. OLSON 2/13/13

EXPIRATION DATE: 12/31/14

DRAWING INFORMATION:

DO NOT SCALE DRAWINGS. CONTRACTOR MUST VERIFY ALL DIMENSIONS AND ADVISE CONSULTANTS OF ANY ERRORS AND OMISSIONS. ALL PREVIOUS ISSUES OF THIS DRAWING ARE SUPERSEDED BY THE LATEST REVISION. THE INFORMATION CONTAINED IN THIS SET OF DOCUMENTS IS PROPRIETARY BY NATURE. ANY USE OR DISCLOSURE OTHER THAN WHICH IS RELATED TO NAMED CLIENT IS STRICTLY PROHIBITED.

DRAWING TITLE:

EXISTING & PROPOSED WEST ELEVATIONS

DRAWING NUMBER:

A-2 | 1

CEI JOB NUMBER: 12-20055

NOTES:
1. ALL ANTENNAS AND ASSOCIATED EQUIPMENT IS TO BE PAINTED TO MATCH THE EXISTING BUILDING AESTHETIC
2. X-RAY OR SCAN CONCRETE SLAB FOR STEEL REINFORCING PRIOR TO ANY PENETRATION
3. FIELD VERIFY LOCATION OF STEEL FRAMING PRIOR TO MAKING ANY PENETRATIONS IN THE CONCRETE DECK
4. ALL T-MOBILE EQUIPMENT & CABLING TO BE TAGGED APPROPRIATELY PER DETAIL 10/A-3.2

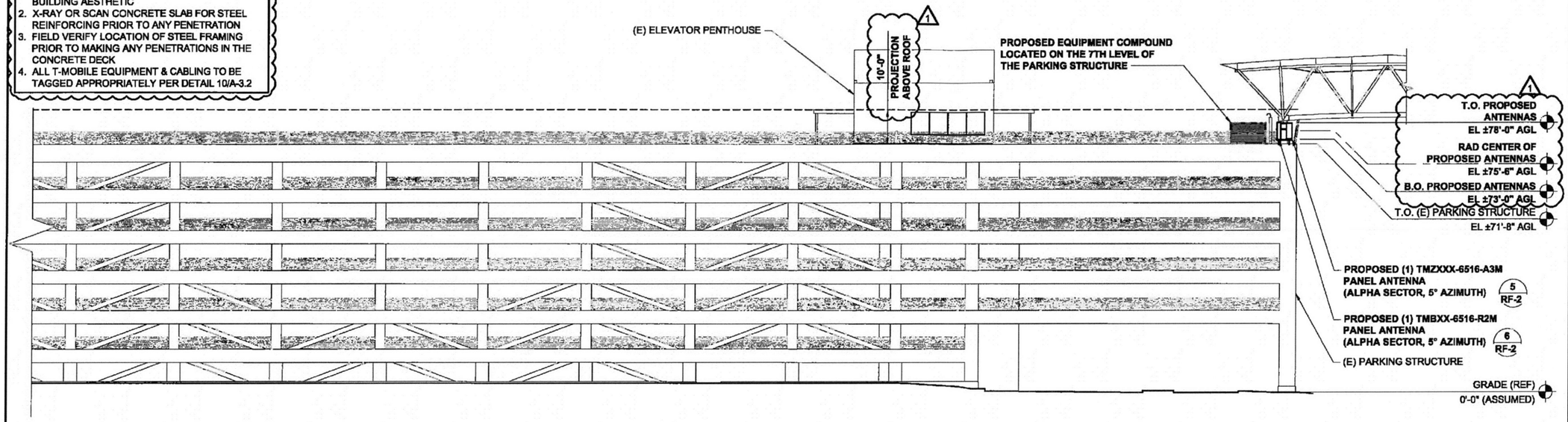

PROPOSED NORTH ELEVATION

22x34 SCALE: 1/16" = 1'-0" | 11x17 SCALE: 1/32" = 1'-0" | 2

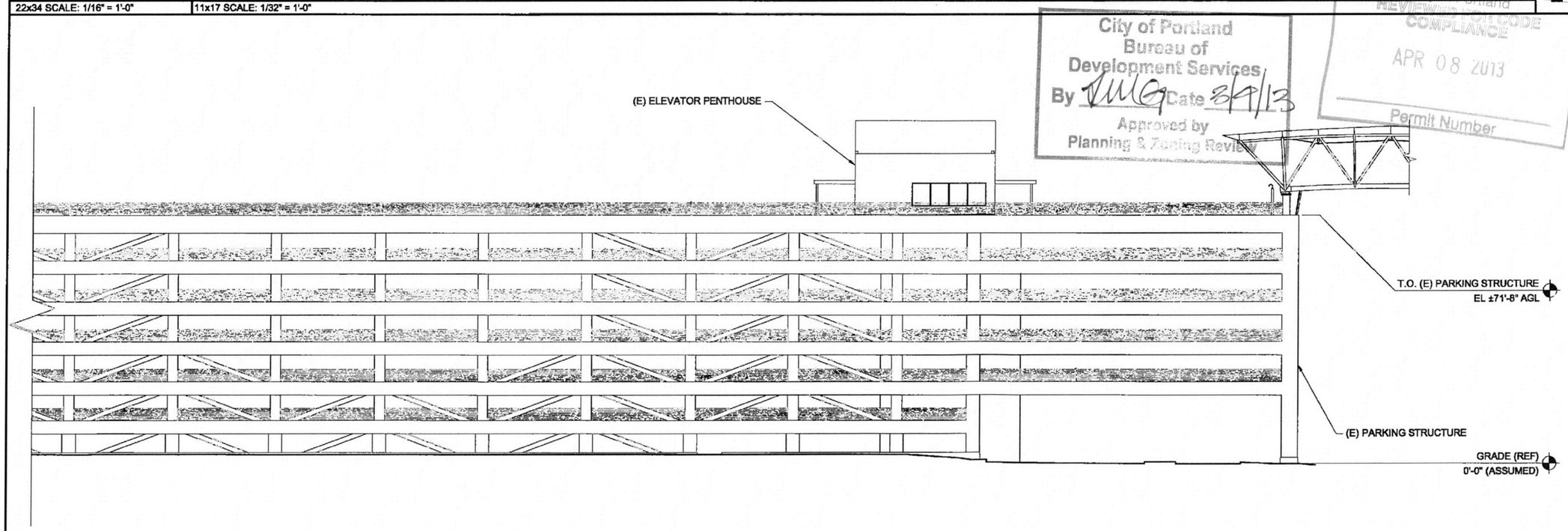

City of Portland Bureau of Development Services By MWG Date 3/19/13 Approved by Planning & Zoning Review

City of Portland REVIEWED FOR CODE COMPLIANCE APR 08 2013 Permit Number

EXISTING NORTH ELEVATION

22x34 SCALE: 1/16" = 1'-0" | 11x17 SCALE: 1/32" = 1'-0" | 1

T-Mobile

8960 NE ALDERWOOD RD
PORTLAND, OR 97220
OFFICE (503) 233-0127

PROJECT CONSULTANTS:

PACIFIC CORPORATION

PLANS PREPARED BY:

CORNERSTONE ENGINEERING, INC.
18928 WOODINVILLE-REDMOND RD NE, SUITE 210
WOODINVILLE, WA 98072
PHONE: 425.487.1732 FAX: 425.487.1734
EMAIL: cei@cornerstone-engr.com
WWW.CORNERSTONE-ENGR.COM

PROJECT INFO:

PO01871A

PORTLAND AIRPORT

7100 NE AIRPORT WAY
PORTLAND, OR 97218
MULTNOMAH COUNTY

ISSUED FOR:

CONSTRUCTION

REV:	DATE:	ISSUED FOR:	BY:
1	02-13-13	CONSTRUCTION	BMH
0	01-21-13	CONSTRUCTION	LJS
A	12-12-12	CLIENT REVIEW	DMO

DRAWN BY:	CHK.:	APV.:
DMO	JRF	MWO

CURRENT ISSUE DATE:

02-13-13

LICENSURE:

REGISTERED PROFESSIONAL ENGINEER 74538PE OREGON MARCH 9, 2004 MARK W. OLSON 2/13/13

EXPIRATION DATE: 12/31/14

DRAWING INFORMATION:

DO NOT SCALE DRAWINGS. CONTRACTOR MUST VERIFY ALL DIMENSIONS AND ADVISE CONSULTANTS OF ANY ERRORS AND OMISSIONS. ALL PREVIOUS ISSUES OF THIS DRAWING ARE SUPERSEDED BY THE LATEST REVISION. THE INFORMATION CONTAINED IN THIS SET OF DOCUMENTS IS PROPRIETARY BY NATURE. ANY USE OR DISCLOSURE OTHER THAN WHICH IS RELATED TO NAMED CLIENT IS STRICTLY PROHIBITED.

DRAWING TITLE:

EXISTING & PROPOSED NORTH ELEVATIONS

DRAWING NUMBER:

A-2.1 | 1

CEI JOB NUMBER: 12-20055

NOTES:
1. ALL ANTENNAS AND ASSOCIATED EQUIPMENT IS TO BE PAINTED TO MATCH THE EXISTING BUILDING AESTHETIC
2. X-RAY OR SCAN CONCRETE SLAB FOR STEEL REINFORCING PRIOR TO ANY PENETRATION
3. FIELD VERIFY LOCATION OF STEEL FRAMING PRIOR TO MAKING ANY PENETRATIONS IN THE CONCRETE DECK
4. ALL T-MOBILE EQUIPMENT & CABLING TO BE TAGGED APPROPRIATELY PER DETAIL 10/A-3.2

1

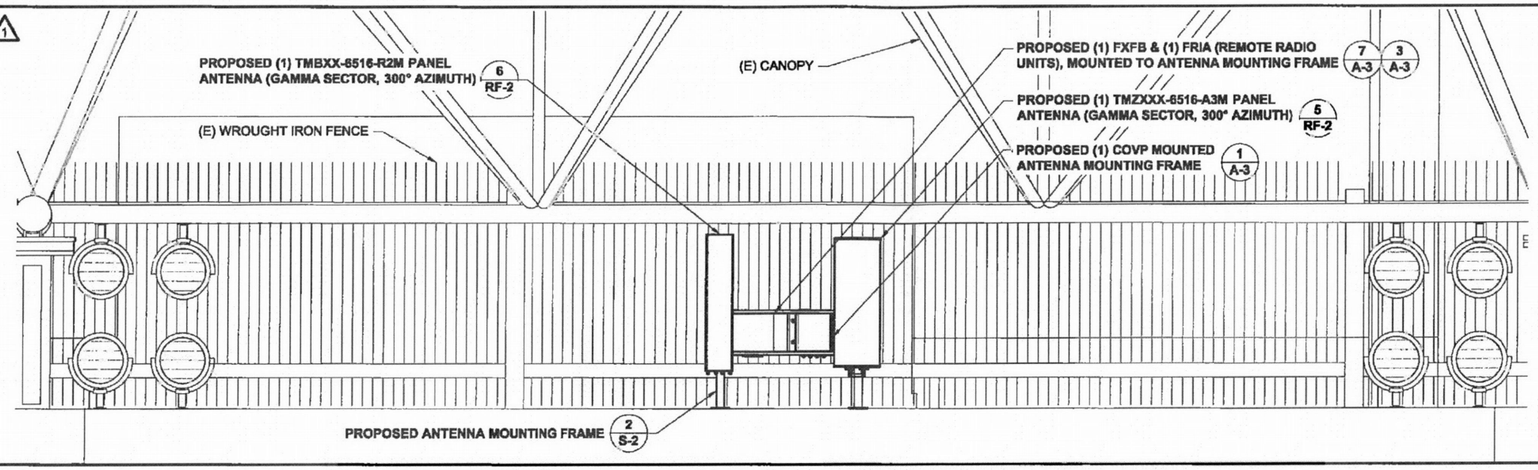

7TH LEVEL GAMMA SECTOR ANTENNA ELEVATION

9

22x34 SCALE: 3/8" = 1'-0" | 11x17 SCALE: 3/16" = 1'-0"

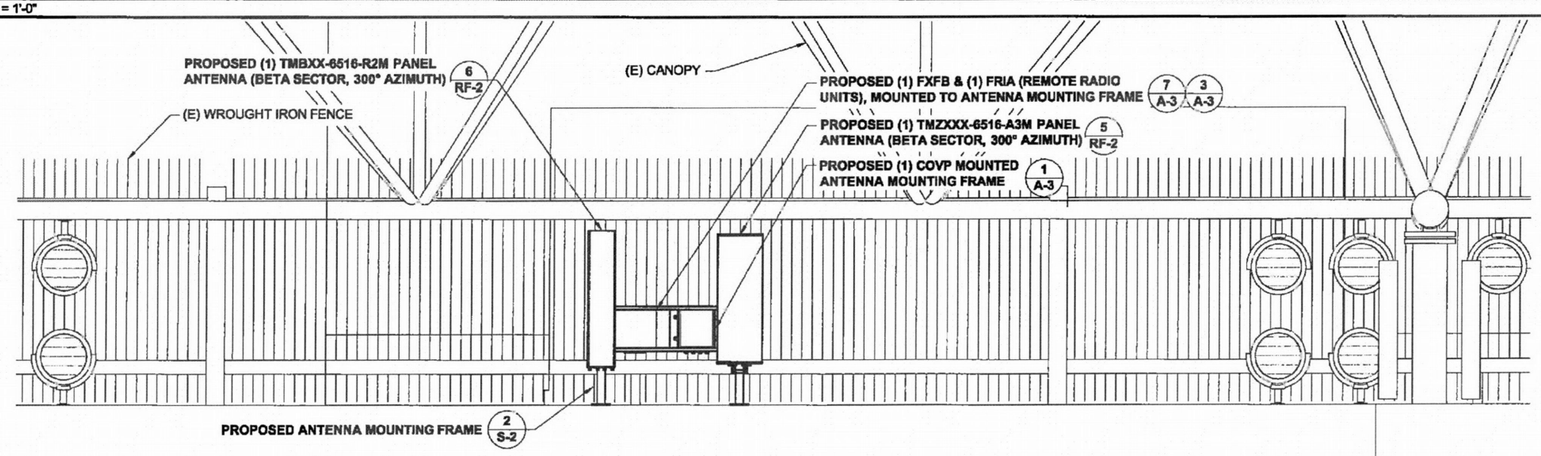

7TH LEVEL BETA SECTOR ANTENNA ELAVATION

5

22x34 SCALE: 3/8" = 1'-0" | 11x17 SCALE: 3/16" = 1'-0"

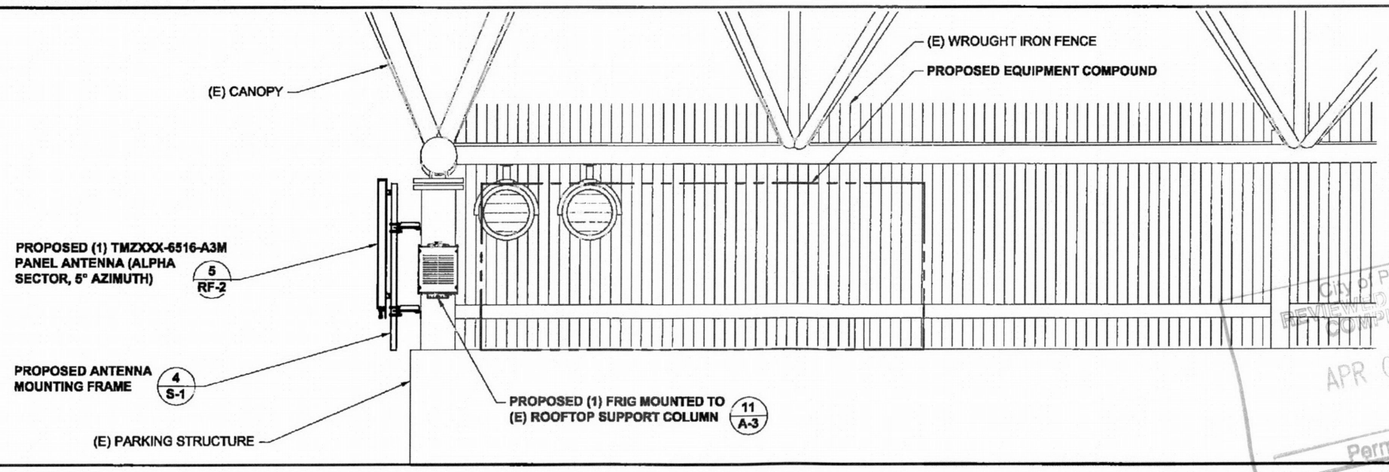

7TH LEVEL ALPHA SECTOR ANTENNA ELEVATION

1

22x34 SCALE: 3/8" = 1'-0" | 11x17 SCALE: 3/16" = 1'-0"

City of Portland
REVIEWED FOR CODE COMPLIANCE
APR 08 2013
Permit Number

T-Mobile
8960 NE ALDERWOOD RD
PORTLAND, OR 97220
OFFICE (503) 235-0127

PROJECT CONSULTANTS:
PACIFIC CORPORATION

PLANS PREPARED BY:
CORNERSTONE ENGINEERING, INC.
16928 WOODINVILLE-REDMOND RD NE, SUITE 210
WOODINVILLE, WA 98072
PHONE: 425.487.1732 FAX: 425.487.1734
EMAIL: csi@cornerstone-engr.com
WWW.CORNERSTONE-ENGR.COM

PROJECT INFO:

PO01871A

PORTLAND AIRPORT

7100 NE AIRPORT WAY
PORTLAND, OR 97218
MULTNOMAH COUNTY

ISSUED FOR:

CONSTRUCTION

REV:	DATE:	ISSUED FOR:	BY:
1	02-13-13	CONSTRUCTION	BMH
0	01-21-13	CONSTRUCTION	LJS
A	12-12-12	CLIENT REVIEW	DMO

DRAWN BY:	CHK.:	APV.:
DMO	JRF	MWO

CURRENT ISSUE DATE:

02-13-13

LICENSURE:

REGISTERED PROFESSIONAL ENGINEER 74536PE OREGON MARCH 9, 2004 MARK W. OLSON 2/13/13

EXPIRATION DATE: 12/31/14

DRAWING INFORMATION:

DO NOT SCALE DRAWINGS. CONTRACTOR MUST VERIFY ALL DIMENSIONS AND ADVISE CONSULTANTS OF ANY ERRORS AND OMISSIONS. ALL PREVIOUS ISSUES OF THIS DRAWING ARE SUPERSEDED BY THE LATEST REVISION. THE INFORMATION CONTAINED IN THIS SET OF DOCUMENTS IS PROPRIETARY BY NATURE. ANY USE OR DISCLOSURE OTHER THAN WHICH IS RELATED TO NAMED CLIENT IS STRICTLY PROHIBITED.

DRAWING TITLE:

PARTIAL PROPOSED ANTENNA ELEVATIONS

DRAWING NUMBER:

A-2.2 | 1

CEI JOB NUMBER: 12-20055

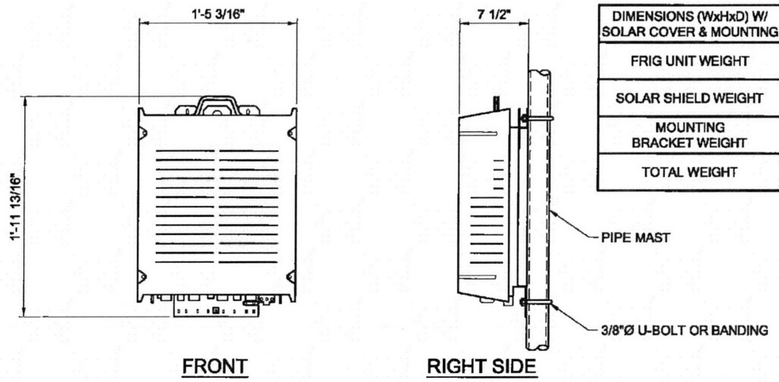

DIMENSIONS (WxHxD) W/ SOLAR COVER & MOUNTING	17.2" x 23.8" x 7.5"
FRIG UNIT WEIGHT	24.0 kg / 52.9 lbs
SOLAR SHIELD WEIGHT	1.2 kg / 2.6 lbs
MOUNTING BRACKET WEIGHT	0.7 kg / 1.5 lbs
TOTAL WEIGHT	25.9 kg / 57 lbs

NOTE:
FRIG TO BE MOUNTED VERTICALLY ONLY

NOKIA FRIG RRU — 11

22x34 SCALE: 1 1/2" = 1'-0" | 11x17 SCALE: 3/4" = 1'-0"

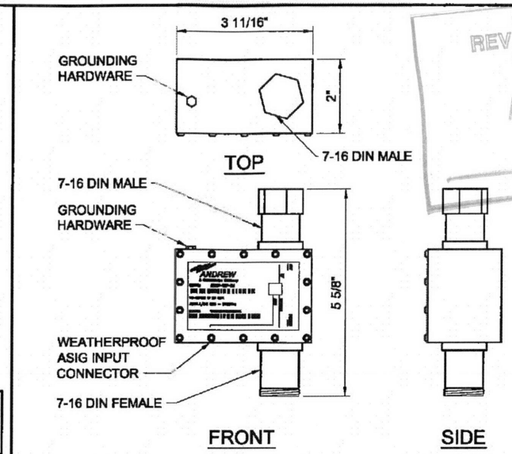

BIAS TEE — 10

22x34 SCALE: 6" = 1'-0" | 11x17 SCALE: 3" = 1'-0"

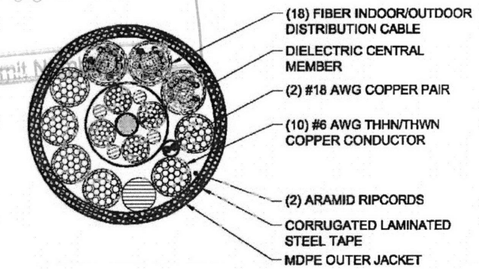

HYBRID CABLE — 9

22x34 SCALE: NTS | 11x17 SCALE: NTS

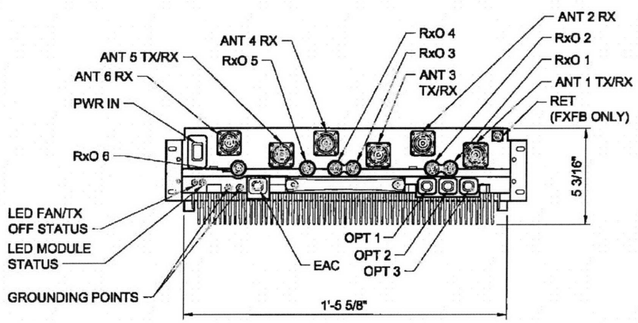

PROPERTY	VALUE
HEIGHT	133 mm/3U (5.2 in)
WIDTH WIDTH (WITH COVERS)	447 mm (17.6 in) 490 mm (19.3 in)
DEPTH (FOR RACK ASSEMBLIES) DEPTH (WITH COVERS)	395 mm (15.6 in) 560 mm (22 in)
WEIGHT (INCLUDING THE CORE, FANS AND CASING)	MAX. 25 kg (55.1 lb)

NOTE:
FOR MOUNTING SEE DETAIL 2/A-3.1

NOKIA FXFB RRU — 7

22x34 SCALE: 3" = 1'-0" | 11x17 SCALE: 1 1/2" = 1'-0"

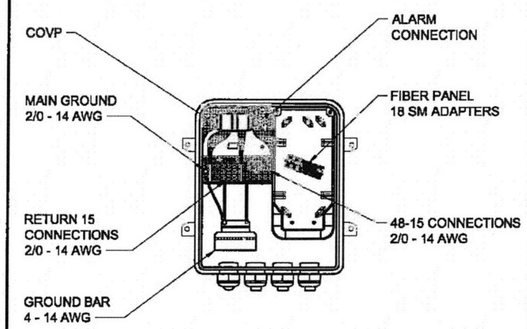

COVP INTERIOR — 6

22x34 SCALE: 1 1/2" = 1'-0" | 11x17 SCALE: 3/4" = 1'-0"

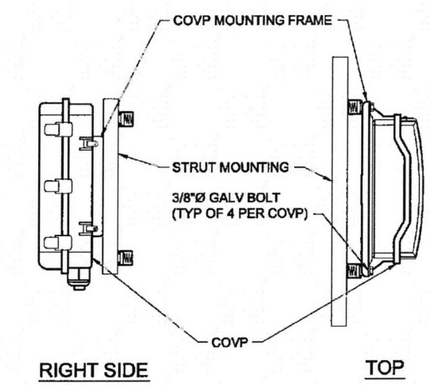

COVP MOUNT — 5

22x34 SCALE: 1 1/2" = 1'-0" | 11x17 SCALE: 3/4" = 1'-0"

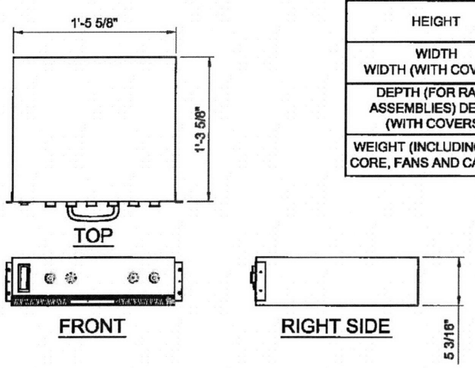

PROPERTY	3-SECTOR RF MODULE	DUAL RF MODULE	SINGLE RF MODULE
HEIGHT	133 mm/3U (5.2 in)	133 mm/3U (5.2 in)	133 mm/3U (5.2 in)
WIDTH WIDTH (WITH COVERS)	447 mm (17.6 in) 490 mm (19.3 in)	447 mm (17.6 in) 490 mm (19.3 in)	447 mm (17.6 in) 490 mm (19.3 in)
DEPTH (FOR RACK ASSEMBLIES) DEPTH (WITH COVERS)	395 mm (15.6 in) 560 mm (22 in)	395 mm (15.6 in) 560 mm (22 in)	395 mm (15.6 in) 560 mm (22 in)
WEIGHT (INCLUDING THE CORE, FANS AND CASING)	25 kg (55.1 lb)	21.8 kg (48.1 lb)	18.7 kg (41.2 lb)

NOTE:
FOR MOUNTING SEE DETAIL 2/A-3.1

NOKIA FRIA RRU — 3

22x34 SCALE: 1 1/2" = 1'-0" | 11x17 SCALE: 3/4" = 1'-0"

NOTES:
1. FOR MOUNTING SEE DETAIL 5/A-3
2. COVP TO BE MOUNTED VERTICALLY ONLY

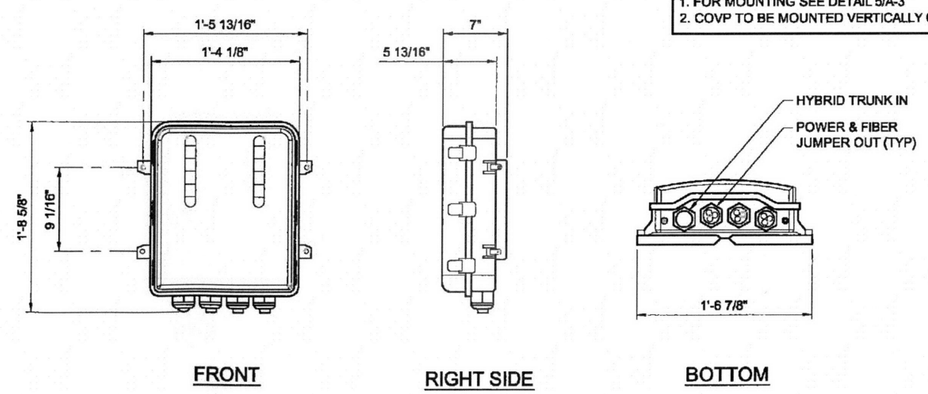

RAYCAP COVP (RCMDC-4010-PF-48) — 1

22x34 SCALE: 1 1/2" = 1'-0" | 11x17 SCALE: 3/4" = 1'-0"

City of Portland
REVIEWED FOR CODE COMPLIANCE
APR 08 2013
Permit No.

T-Mobile
8960 NE ALDERWOOD RD
PORTLAND, OR 97220
OFFICE (503) 235-0127

PROJECT CONSULTANTS:
PACIFIC CORPORATION

PLANS PREPARED BY:
CORNERSTONE ENGINEERING, INC.
16928 WOODINVILLE-REDMOND RD NE, SUITE 210
WOODINVILLE, WA 98072
PHONE: 425.487.1732 FAX: 425.487.1734
EMAIL: cei@cornerstone-engr.com
WWW.CORNERSTONE-ENGR.COM

PROJECT INFO:

PO01871A

PORTLAND AIRPORT

7100 NE AIRPORT WAY
PORTLAND, OR 97218
MULTNOMAH COUNTY

ISSUED FOR:

CONSTRUCTION

REV:	DATE:	ISSUED FOR:	BY:
1	02-13-13	CONSTRUCTION	BMH
0	01-21-13	CONSTRUCTION	LJS
A	12-12-12	CLIENT REVIEW	DMO

DRAWN BY:	CHK.:	APV.:
DMO	JRF	MWO

CURRENT ISSUE DATE:

02-13-13

LICENSURE:

REGISTERED PROFESSIONAL ENGINEER
74536PE
OREGON
MARCH 9, 2004
MARK W. OLSON
2/13/13
EXPIRATION DATE: 12/31/14

DRAWING INFORMATION:

DO NOT SCALE DRAWINGS. CONTRACTOR MUST VERIFY ALL DIMENSIONS AND ADVISE CONSULTANTS OF ANY ERRORS AND OMISSIONS. ALL PREVIOUS ISSUES OF THIS DRAWING ARE SUPERSEDED BY THE LATEST REVISION. THE INFORMATION CONTAINED IN THIS SET OF DOCUMENTS IS PROPRIETARY BY NATURE. ANY USE OR DISCLOSURE OTHER THAN WHICH IS RELATED TO NAMED CLIENT IS STRICTLY PROHIBITED.

DRAWING TITLE:

DETAIL SHEET

DRAWING NUMBER:

A-3 | 1

CEI JOB NUMBER: 12-20055

PARTS LIST

ITEM #	QUANTITY	PART NUMBER	DESCRIPTION
1	2	601257	ANGLE ARM
2	2	601256	MOUNTING CLAMP
3	2	601235-1	BRACKET
4	2	601235-2	BRACKET
5	1	601258	LABEL, ANGLE
6	4	600679-3	SPACER TUBE
7	14	100525-24	ME FLAT WASHER (STAINLESS STEEL)
8	2	600419-8	M8x1.25x25mm LARGE CARRIAGE BOLT (STAINLESS STEEL)
9	6	6/1/7395	M8 LOCK WASHER (STAINLESS STEEL)
10	4	600419-10	M8x1.25x110mm LARGE HEX HEAD SCREW (STAINLESS STEEL)
11	6	204001-15	M8x1.25 HEX NUT (STAINLESS STEEL)
12	2	225244	CLAMP PLATE
13	8	600419-24	LARGE LOCK WASHER (STAINLESS STEEL)
14	8	204001-21	M12x1.75 HEX NUT (STAINLESS STEEL)
15	4	600419-12	M12x1.75x150mm LARGE CARRIAGE BOLT (STAINLESS STEEL)
17	1	601564	MOLYBDENUM DISULFIDE GREASE

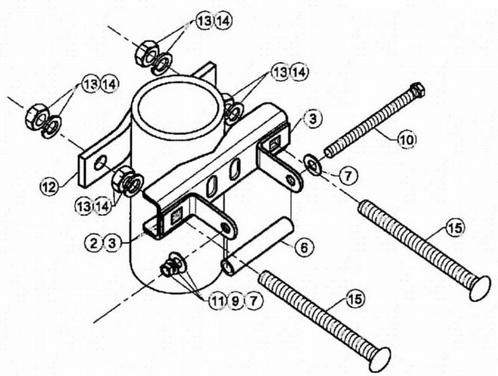

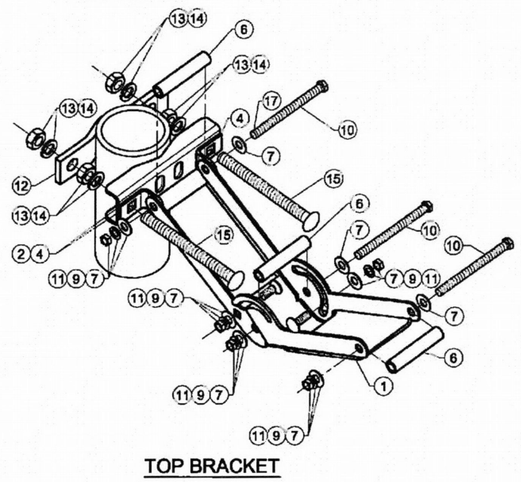

ANTENNA BRACKET ATTACHMENT — 7

22x34 SCALE: NTS | 11x17 SCALE: NTS

City of Portland
REVIEWED FOR CODE COMPLIANCE
APR 08 2013
Permit Number

NOT USED — 10

22x34 SCALE: NTS | 11x17 SCALE: NTS

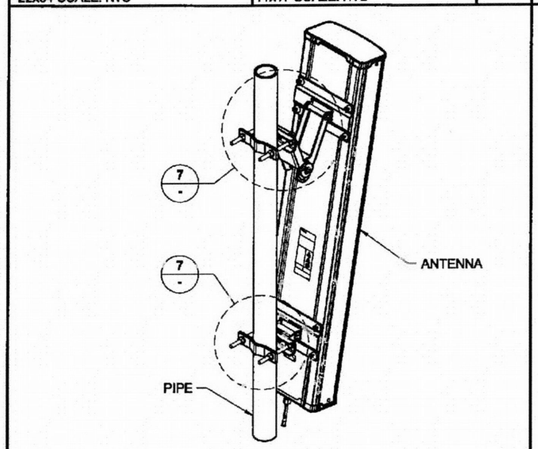

ANTENNA ATTACHMENT — 6

22x34 SCALE: NTS | 11x17 SCALE: NTS

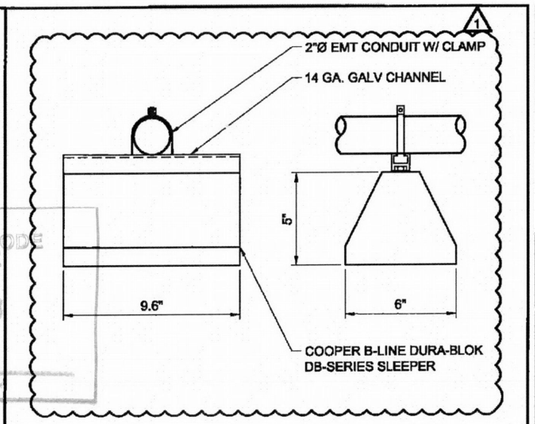

COAX SUPPORT SLEEPER — 9

22x34 SCALE: NTS | 11x17 SCALE: NTS

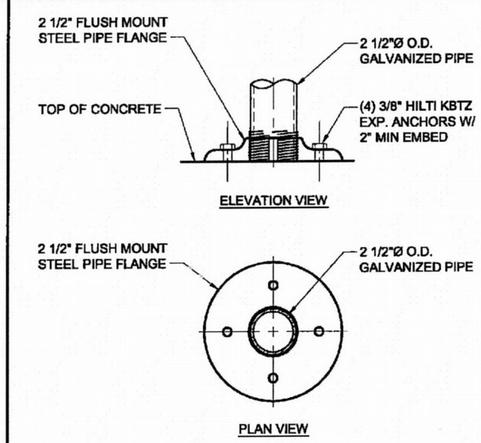

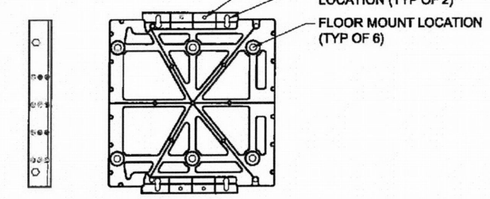

MOUNTING PLINTH (FMFA) — 4

22x34 SCALE: 1 1/2" = 1'-0" | 11x17 SCALE: 3/4" = 1'-0"

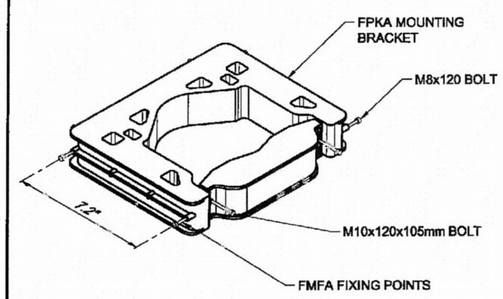

MOUNTING BRACKET (FPKA) — 3

22x34 SCALE: NTS | 11x17 SCALE: NTS

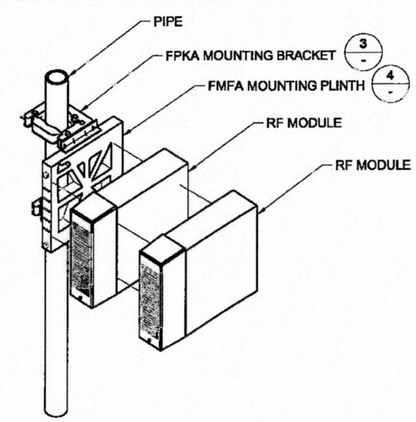

RRU MOUNTING — 2

22x34 SCALE: NTS | 11x17 SCALE: NTS

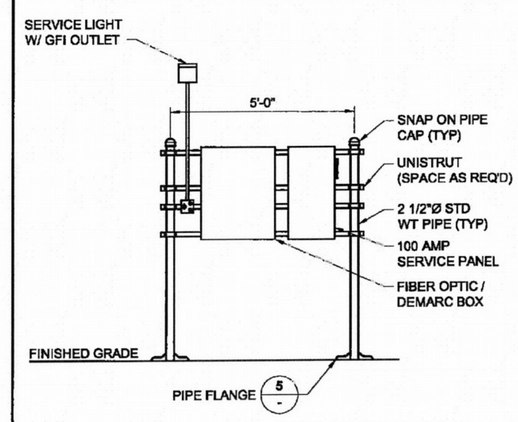

UTILITY H-FRAME DETAIL — 1

22x34 SCALE: 1/2" = 1'-0" | 11x17 SCALE: 1/4" = 1'-0"

T-Mobile
8960 NE ALDERWOOD RD
PORTLAND, OR 97220
OFFICE (503) 235-0127

PROJECT CONSULTANTS:
PACIFIC CORPORATION

PLANS PREPARED BY:
CORNERSTONE ENGINEERING, INC.
16928 WOODINVILLE-REDMOND RD NE, SUITE 210
WOODINVILLE, WA 98072
PHONE: 425.487.1732 FAX: 425.487.1734
EMAIL: cei@cornerstone-engr.com
WWW.CORNERSTONE-ENGR.COM

PROJECT INFO:

PO01871A

PORTLAND AIRPORT

7100 NE AIRPORT WAY
PORTLAND, OR 97218
MULTNOMAH COUNTY

ISSUED FOR:

CONSTRUCTION

REV:	DATE:	ISSUED FOR:	BY:
1	02-13-13	CONSTRUCTION	BMH
0	01-21-13	CONSTRUCTION	LJS
A	12-12-12	CLIENT REVIEW	DMO

DRAWN BY:	CHK.:	APV.:
DMO	JRF	MWO

CURRENT ISSUE DATE: 02-13-13

LICENSURE:

REGISTERED PROFESSIONAL ENGINEER
74536PE
OREGON
MARCH 9, 2004
MARK W. OLSON
2/13/13
EXPIRATION DATE: 12/31/14

DRAWING INFORMATION:

DO NOT SCALE DRAWINGS. CONTRACTOR MUST VERIFY ALL DIMENSIONS AND ADVISE CONSULTANTS OF ANY ERRORS AND OMISSIONS. ALL PREVIOUS ISSUES OF THIS DRAWING ARE SUPERSEDED BY THE LATEST REVISION. THE INFORMATION CONTAINED IN THIS SET OF DOCUMENTS IS PROPRIETARY BY NATURE. ANY USE OR DISCLOSURE OTHER THAN WHICH IS RELATED TO NAMED CLIENT IS STRICTLY PROHIBITED.

DRAWING TITLE: DETAIL SHEET

DRAWING NUMBER: A-3.1 | 1

CEI JOB NUMBER: 12-20055

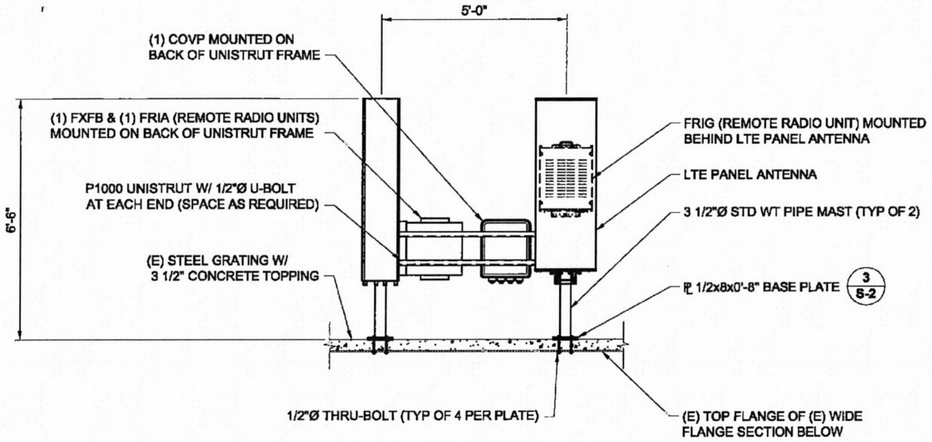

BETA & GAMMA SECTOR DETAIL — 11

22x34 SCALE: 1/2" = 1'-0" | 11x17 SCALE: 1/4" = 1'-0"

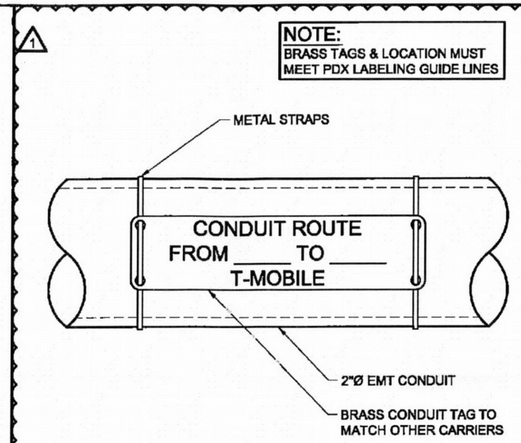

CONDUIT TAG — 10

22x34 SCALE: NTS | 11x17 SCALE: NTS

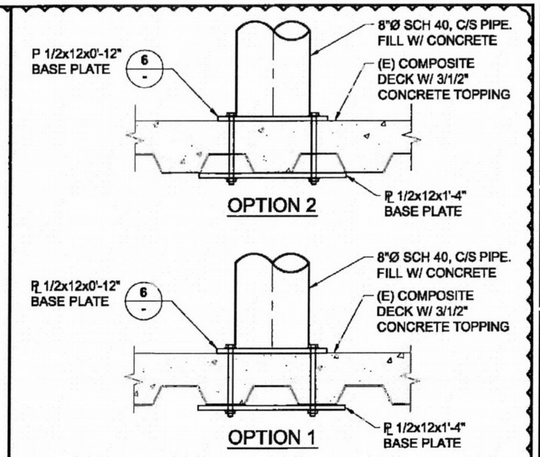

BOLLARD ANCHORAGE — 9

22x34 SCALE: 1 1/2" = 1'-0" | 11x17 SCALE: 3/4" = 1'-0"

NOT USED — 8

22x34 SCALE: NTS | 11x17 SCALE: NTS

NOT USED — 7

22x34 SCALE: NTS | 11x17 SCALE: NTS

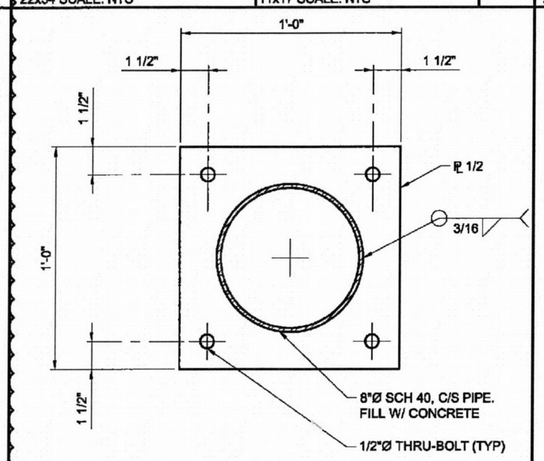

BASE PLATE DETAIL — 6

22x34 SCALE: 3" = 1'-0" | 11x17 SCALE: 1 1/2" = 1'-0"

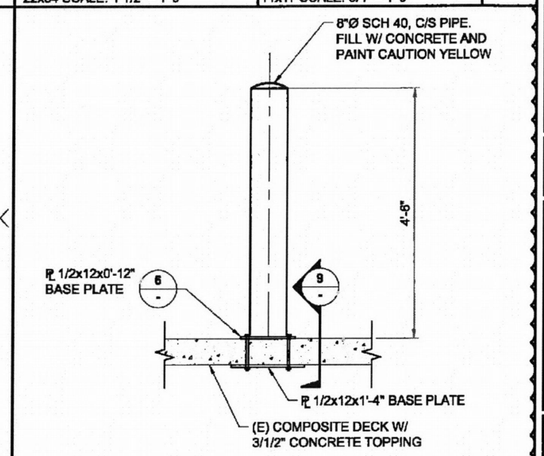

BOLLARD DETAIL — 5

22x34 SCALE: 3/4" = 1'-0" | 11x17 SCALE: 3/8" = 1'-0"

TYPICAL FENCING NOTES

(INSTALL FENCING PER ASTM F-567, SWING GATES PER ASTM F-900.)

1. GATE POST, CORNER, END OR PULL POST 2 1/2" NOMINAL (2.875" O.D) SCHEDULE 40 PIPE, 5.79 LBS/LF FOR GATE WIDTHS UP THRU 6 FEET OR 12 FEET FOR DOUBLE SWING GATE PER ASTM-F1083.
2. LINE POST: 2" (2.375" O.D.) SCHEDULE 40 PIPE, 3.65 LBS/LF PER ASTM-F1083.
3. GATE FRAME: 1 1/2"(1.875 O.D.) SCHEDULE 40 PIPE, 2.72 LBS/LF PER ASTM-F1083.
4. TOP RAIL & BRACE RAIL: 1 1/2" (1.875 O.D.) SCHEDULE 40 PIPE, 2.27 LBS/LF PER ASTM-F1083.
5. FABRIC: 12 GA CORE WIRE SIZE, 2" MESH, ZINC COATED CONFORMING TO ASTM-A392.
6. TIE WIRE: MINIMUM 11 GA GALVANIZED STEEL AT POSTS AND RAILS TIE A SINGLE WRAP OF FABRIC AND AT TENSION WIRE TIE BY HOG RINGS SPACED MAX 24" INTERVALS. TENSION WIRE: 7 GA GALVANIZED STEEL.
7. GATE LATCH: 1-3/8"O.D. PLUNGER ROD WITH MUSHROOM TYPE CATCH (MASTER HALCO PART # 15911 OR EQUAL) AND LOCK.
8. HEIGHT = 6' VERTICAL + 1' BARBED WIRE VERTICAL DIMENSION AS REQUIRED.
9. PRIVACY SLATS SHALL BE DOUBLE WALL, SELF LOCKING TO PROVIDE A TIGHT FIT IN FENCE FABRIC. SLATS SHALL BE MANUFACTURED FROM VIRGIN, HIGH DENSITY POLYETHYLENE AND PROVIDE A MINIMUM OF 75% SCREENING.

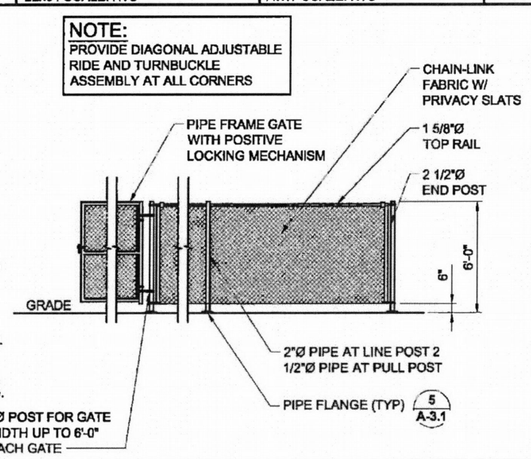

CHAIN-LINK FENCE DETAIL — 3

22x34 SCALE: 1/2" = 1'-0" | 11x17 SCALE: 1/4" = 1'-0"

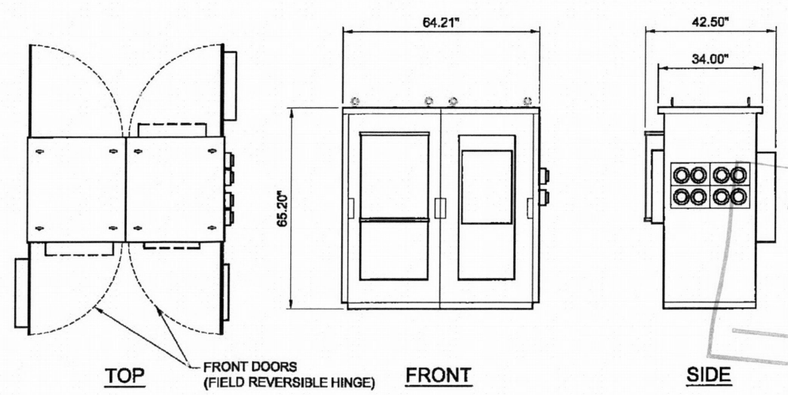

DUAL BAY CABINET	
MANUFACTURER: TELECT	
P/N: IOE-32S-A202	
HEIGHT: 65.20"	
DEPTH: 42.50"	
WIDTH: 64.21"	

City of Portland REVIEWED FOR CODE COMPLIANCE APR 08 2013 Permit Number

TELECT DUAL BAY CABINET — 1

22x34 SCALE: 1/2" = 1'-0" | 11x17 SCALE: 1/4" = 1'-0"

T-Mobile
8960 NE ALDERWOOD RD
PORTLAND, OR 97220
OFFICE (503) 235-0127

PROJECT CONSULTANTS:
PACIFIC CORPORATION

PLANS PREPARED BY:
CORNERSTONE ENGINEERING, INC.
16928 WOODINVILLE-REDMOND RD NE, SUITE 210
WOODINVILLE, WA 98072
PHONE: 425.487.1732 FAX: 425.487.1734
EMAIL: cei@cornerstone-engr.com
WWW.CORNERSTONE-ENGR.COM

PROJECT INFO:

PO01871A

PORTLAND AIRPORT

7100 NE AIRPORT WAY
PORTLAND, OR 97218
MULTNOMAH COUNTY

ISSUED FOR: CONSTRUCTION

REV:	DATE:	ISSUED FOR:	BY:
1	02-13-13	CONSTRUCTION	BMH
0	01-21-13	CONSTRUCTION	LJS
A	12-12-12	CLIENT REVIEW	DMO

DRAWN BY:	CHK.:	APV.:
DMO	JRF	MWO

CURRENT ISSUE DATE: 02-13-13

LICENSURE:

REGISTERED PROFESSIONAL ENGINEER 74583PE OREGON MARCH 9, 2004 MARK W. OLSON 2/13/13

EXPIRATION DATE: 12/31/14

DRAWING INFORMATION:

DO NOT SCALE DRAWINGS. CONTRACTOR MUST VERIFY ALL DIMENSIONS AND ADVISE CONSULTANTS OF ANY ERRORS AND OMISSIONS. ALL PREVIOUS ISSUES OF THIS DRAWING ARE SUPERSEDED BY THE LATEST REVISION. THE INFORMATION CONTAINED IN THIS SET OF DOCUMENTS IS PROPRIETARY BY NATURE. ANY USE OR DISCLOSURE OTHER THAN WHICH IS RELATED TO NAMED CLIENT IS STRICTLY PROHIBITED.

DRAWING TITLE: DETAIL SHEET

DRAWING NUMBER: A-3.2 | 1

CEI JOB NUMBER: 12-20055

NOT USED 12

22x34 SCALE: NTS | 11x17 SCALE: NTS

RACEWAY SUPPORT DETAIL 10

22x34 SCALE: NTS | 11x17 SCALE: NTS

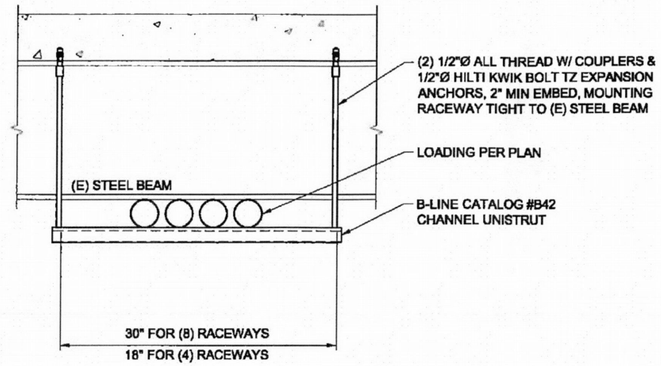

NOT USED 9

22x34 SCALE: NTS | 11x17 SCALE: NTS

City of Portland
REVIEWED FOR CODE COMPLIANCE
APR 08 2013
Permit Number

NOT USED 8

22x34 SCALE: NTS | 11x17 SCALE: NTS

PULL BOX DETAIL 6

22x34 SCALE: NTS | 11x17 SCALE: NTS

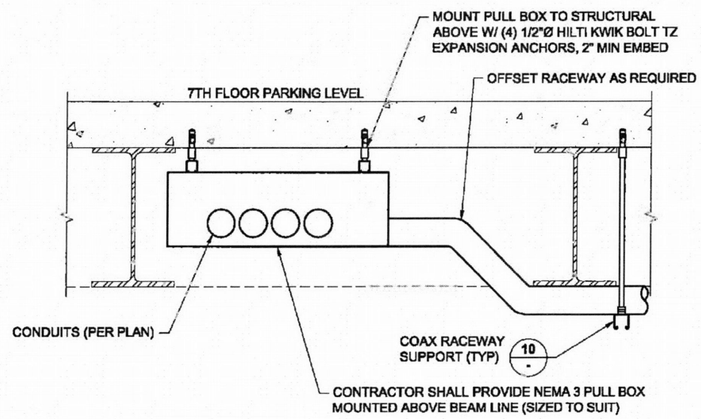

NOTE:

1. CONTRACTOR TO X-RAY PRIOR TO DRILLING OR CORING TO LOCATE EXISTING RE-BAR AND CONDUITS. DO NOT CUT RE-BAR OR CONDUITS
2. CONTRACTOR TO INSURE WATER-TIGHTNESS AT ALL WALL AND FLOOR PENETRATIONS

"A" = DIA. OF CROWN CROWN DIAMETER TO BE THE DIAMETER OF THE WALL OPENING PLUS 1"

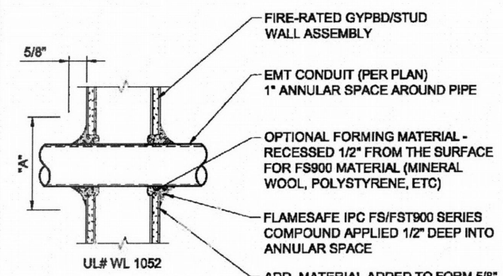

UL# WL 1052

FRAMED WALL PENETRATION

NOT USED 4

22x34 SCALE: NTS | 11x17 SCALE: NTS

CONDUIT FLOOR PENETRATION 2

22x34 SCALE: NTS | 11x17 SCALE: NTS

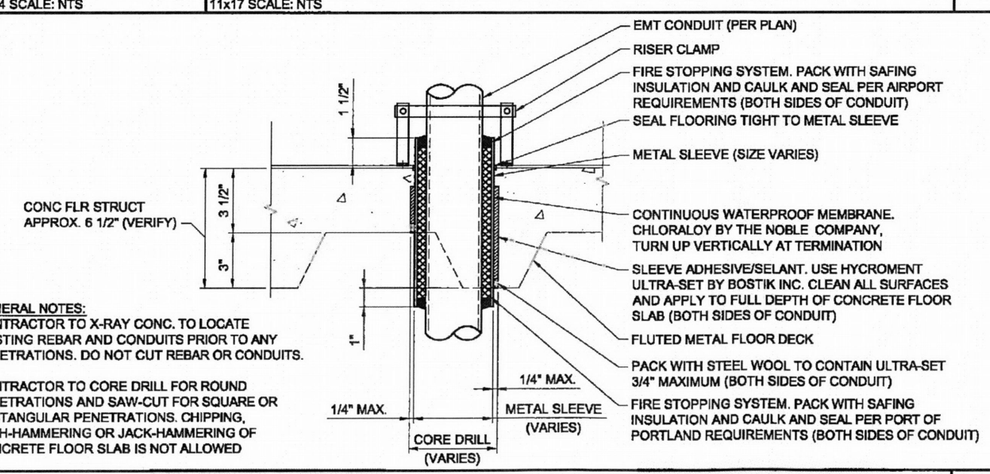

GENERAL NOTES:
CONTRACTOR TO X-RAY CONC. TO LOCATE EXISTING REBAR AND CONDUITS PRIOR TO ANY PENETRATIONS. DO NOT CUT REBAR OR CONDUITS.

CONTRACTOR TO CORE DRILL FOR ROUND PENETRATIONS AND SAW-CUT FOR SQUARE OR RECTANGULAR PENETRATIONS. CHIPPING, BUSH-HAMMERING OR JACK-HAMMERING OF CONCRETE FLOOR SLAB IS NOT ALLOWED

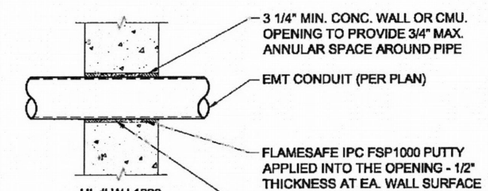

UL # WJ 1020

CONCRETE WALL PENETRATION

CONDUIT WALL PENETRATION 1

22x34 SCALE: NTS | 11x17 SCALE: NTS

T · Mobile ·

8960 NE ALDERWOOD RD
PORTLAND, OR 97220
OFFICE (503) 235-0127

PROJECT CONSULTANTS:

PACIFIC CORPORATION

PLANS PREPARED BY:

CORNERSTONE ENGINEERING, INC.
15928 WOODINVILLE-REDMOND RD NE, SUITE 210
WOODINVILLE, WA 98072
PHONE: 425.487.1732 FAX: 425.487.1734
EMAIL: cei@cornerstone-engr.com
WWW.CORNERSTONE-ENGR.COM

PROJECT INFO:

PO01871A

PORTLAND AIRPORT

7100 NE AIRPORT WAY
PORTLAND, OR 97218
MULTNOMAH COUNTY

ISSUED FOR:

CONSTRUCTION

REV:	DATE:	ISSUED FOR:	BY:
1	02-13-13	CONSTRUCTION	BMH
0	01-21-13	CONSTRUCTION	LJS
A	12-12-12	CLIENT REVIEW	DMO

DRAWN BY:	CHK.:	APV.:
DMO	JRF	MWO

CURRENT ISSUE DATE:

02-13-13

LICENSURE:

REGISTERED PROFESSIONAL ENGINEER 74639PE OREGON MARCH 9, 2004 MARK W. OLSON 2/13/13

EXPIRATION DATE: 12/31/14

DRAWING INFORMATION:

DO NOT SCALE DRAWINGS. CONTRACTOR MUST VERIFY ALL DIMENSIONS AND ADVISE CONSULTANTS OF ANY ERRORS AND OMISSIONS. ALL PREVIOUS ISSUES OF THIS DRAWING ARE SUPERSEDED BY THE LATEST REVISION. THE INFORMATION CONTAINED IN THIS SET OF DOCUMENTS IS PROPRIETARY BY NATURE. ANY USE OR DISCLOSURE OTHER THAN WHICH IS RELATED TO NAMED CLIENT IS STRICTLY PROHIBITED.

DRAWING TITLE:

DETAIL SHEET

DRAWING NUMBER:

A-3.3 1 | 1

CEI JOB NUMBER: 12-20055

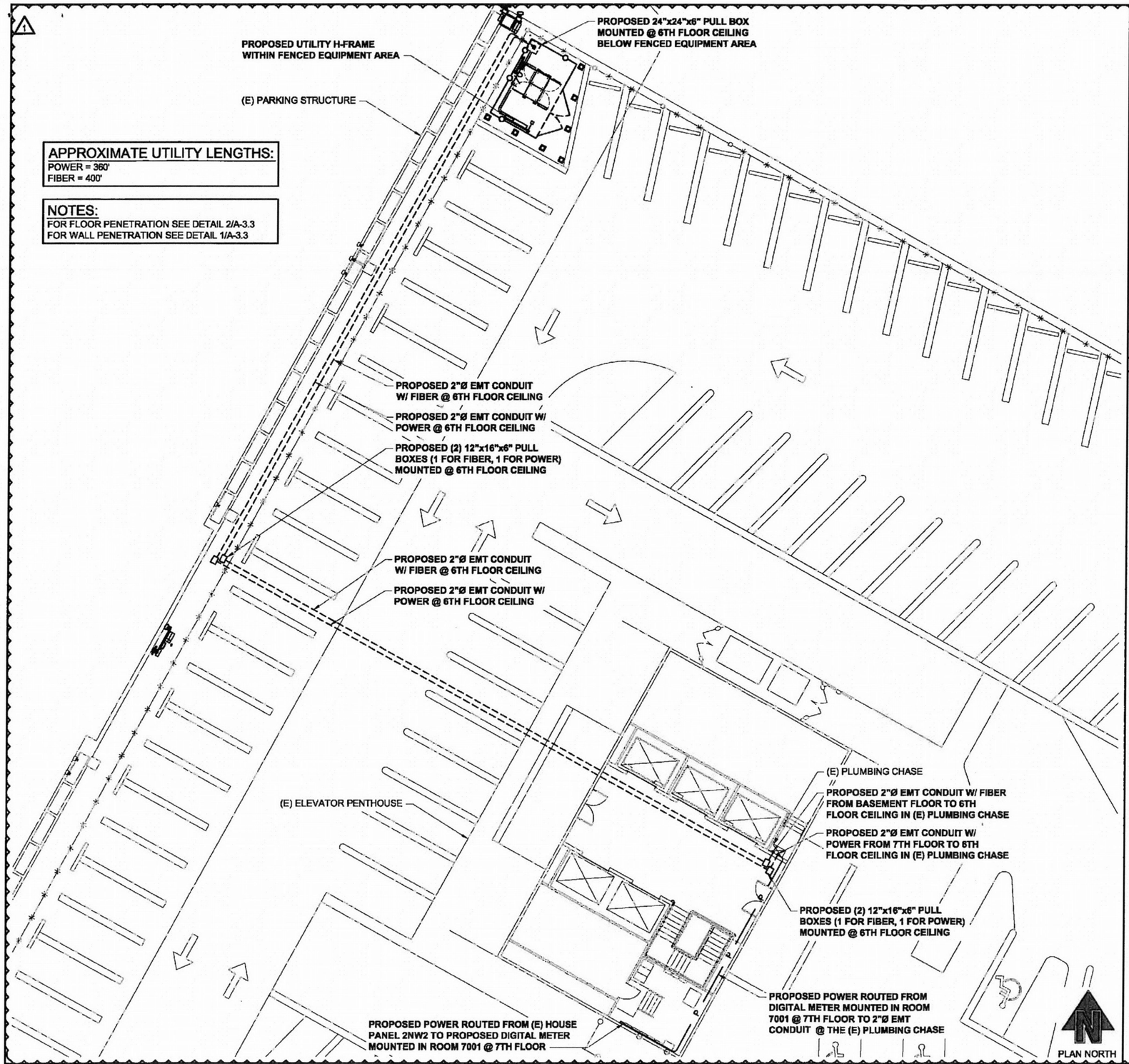

APPROXIMATE UTILITY LENGTHS:
POWER = 360'
FIBER = 400'

NOTES:
FOR FLOOR PENETRATION SEE DETAIL 2/A-3.3
FOR WALL PENETRATION SEE DETAIL 1/A-3.3

ELECTRICAL SITE PLAN @ 6TH & 7TH FLOORS

22x34 SCALE: 1" = 10'-0" | 11x17 SCALE: 1" = 20'-0" | 2

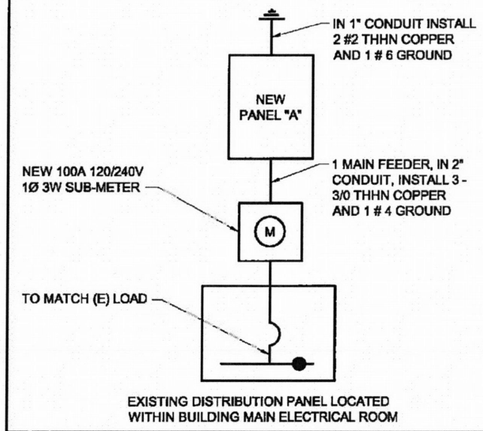

ONE LINE DIAGRAM

22x34 SCALE: NTS | 11x17 SCALE: NTS | 9

FIBER OPTICS ROUTE:

FIBER WILL ORIGINATE IN THE BASEMENT (TUNNEL FLOOR) FROM TELCO ROOM PO138

PROVIDE A 2"Ø EMT CONDUIT WITH PULL STRING TO ADJACENT ROOM PO131A VIA EXISTING CABLE TRAY ABOVE DROP CEILING PANELS

ROUTE FIBER IN 2"Ø EMT CONDUIT WITH PULL STRING TO 6TH FLOOR MECHANICAL EQUIPMENT ROOM P6000 VIA EXISTING VERTICAL PLUMBING CHASE

MEET UP WITH POWER ROUTE IN 6TH FLOOR MECHANICAL EQUIPMENT ROOM P6000 PLUMBING CHASE

POWER ROUTE:

POWER WILL ORIGINATE IN THE 7TH FLOOR ELECTRICAL ROOM 7001 FROM EXISTING HOUSE PANEL 2NW2 (CONTRACTOR TO VERIFY CAPACITY OF THE EXISTING SERVICE PANEL TO SUPPLY A MINIMUM OF 100AMP OF POWER TO T-MOBILE WIRELESS)

PROVIDE A VERIS INDUSTRIES 8100 SERIES ENERGY METER MOUNTED ON CMU WALL ADJACENT TO THE EXISTING SERVICE PANEL IN THE 7TH FLOOR ELECTRICAL ROOM 7001. SERVICE METER TO MATCH THE EXISTING AT&T WIRELESS INSTALLATION PER PORT OF PORTLAND SPECIFICATIONS

FIELD ROUTE 2"Ø EMT CONDUIT WITH PULL STRING OVERHEAD AT CEILING NORTH TO 7TH FLOOR MECHANICAL ROOM P7000

ROUTE POWER DOWN THE EXISTING PLUMBING CHASE TO THE 6TH FLOOR

MEET UP WITH FIBER ROUTE IN 6TH FLOOR MECHANICAL EQUIPMENT ROOM P6000 PLUMBING CHASE

FIBER OPTICS / POWER ROUTE:

FROM 6TH FLOOR MECHANICAL EQUIPMENT ROOM P6000 PLUMBING CHASE

ROUTE POWER AND FIBER IN SEPARATE 2"Ø EMT CONDUITS THRU SOUTH WALL ABOVE THE ELEVATOR LOBBY DROP CEILING TO SEPARATE PULL BOXES (1 FIBER, 1 POWER)

FIELD ROUTE FIBER AND POWER CONDUITS WEST THRU THE ELEVATOR LOBBY ABOVE THE DROP CEILING AND PENETRATE THE WEST SOFFIT WALL BETWEEN THE 6TH FLOOR ELEVATOR SHAFTS TO MATCH EXISTING WIRELESS CARRIERS.

CONTINUE FIBER AND POWER ROUTE WEST UNDER THE 6TH FLOOR CEILING TO THE END OF THE PARKING GARAGE TO SEPARATE PULL BOXES (1 FIBER, 1 POWER)

ROUTE FIBER AND POWER NORTH TO A SINGLE PULL BOX BELOW THE PROPOSED T-MOBILE EQUIPMENT LEASE AREA

PENETRATE THE EXISTING 7TH FLOOR DECK TO THE T-MOBILE UTILITY H-FRAME.

POWER / FIBER ROUTING NOTES

22x34 SCALE: 1" = 10'-0" | 11x17 SCALE: 1" = 20'-0" | 1

T-Mobile
8960 NE ALDERWOOD RD
PORTLAND, OR 97220
OFFICE (503) 235-0127

PROJECT CONSULTANTS:
PACIFIC CORPORATION

PLANS PREPARED BY:
CORNERSTONE ENGINEERING, INC.
16928 WOODINVILLE-REDMOND RD NE, SUITE 210
WOODINVILLE, WA 98072
PHONE: 425.487.1732 FAX: 425.487.1734
EMAIL: cei@cornerstone-engr.com
WWW.CORNERSTONE-ENGR.COM

PROJECT INFO:

PO01871A

PORTLAND AIRPORT

7100 NE AIRPORT WAY
PORTLAND, OR 97218
MULTNOMAH COUNTY

ISSUED FOR:

CONSTRUCTION

REV:	DATE:	ISSUED FOR:	BY:
1	02-13-13	CONSTRUCTION	BMH
0	01-21-13	CONSTRUCTION	LJS
A	12-12-12	CLIENT REVIEW	DMO

DRAWN BY:	CHK.:	APV.:
DMO	JRF	MWO

CURRENT ISSUE DATE:

02-13-13

LICENSURE:

REGISTERED PROFESSIONAL ENGINEER 74538PE OREGON MARCH 9, 2004 MARK W. OLSON 2/13/13

EXPIRATION DATE: 12/31/14

DRAWING INFORMATION:

DO NOT SCALE DRAWINGS. CONTRACTOR MUST VERIFY ALL DIMENSIONS AND ADVISE CONSULTANTS OF ANY ERRORS AND OMISSIONS. ALL PREVIOUS ISSUES OF THIS DRAWING ARE SUPERSEDED BY THE LATEST REVISION. THE INFORMATION CONTAINED IN THIS SET OF DOCUMENTS IS PROPRIETARY BY NATURE. ANY USE OR DISCLOSURE OTHER THAN WHICH IS RELATED TO NAMED CLIENT IS STRICTLY PROHIBITED.

DRAWING TITLE:

ELECTRICAL SITE PLAN & NOTES

DRAWING NUMBER:

E-1 | 1

CEI JOB NUMBER: 12-20055

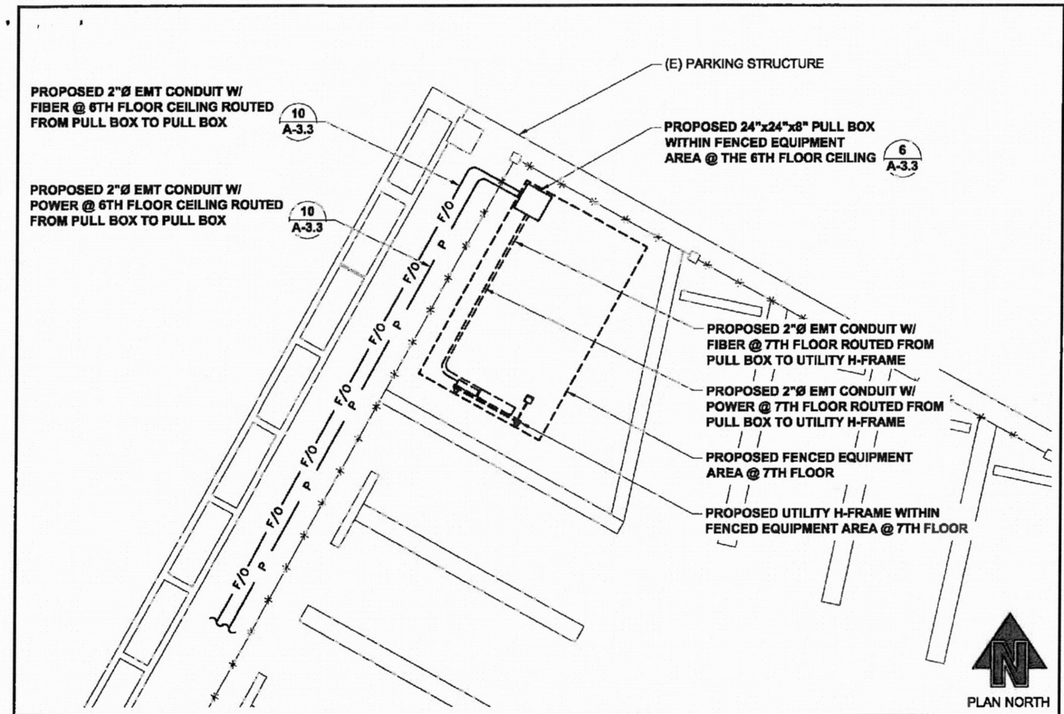

ELECTRICAL SITE PLAN @ EQUIPMENT AREA — 4

22x34 SCALE: 3/16" = 1'-0" | 11x17 SCALE: 3/32" = 1'-0"

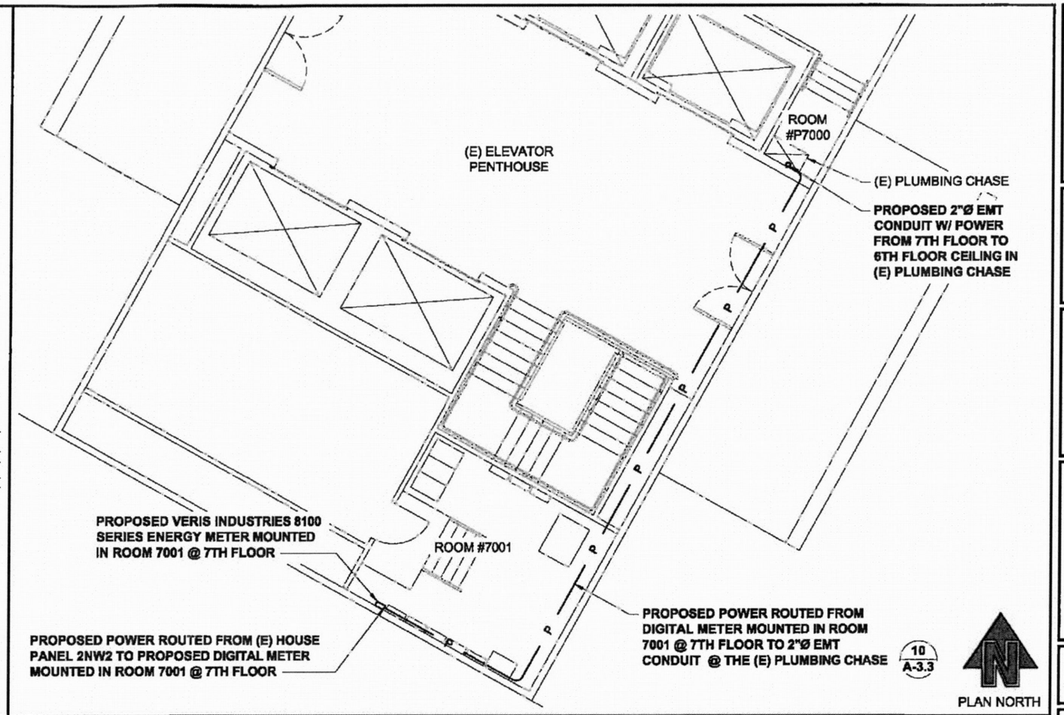

ELECTRICAL SITE PLAN @ 7TH FLOOR — 3

22x34 SCALE: 3/16" = 1'-0" | 11x17 SCALE: 3/32" = 1'-0"

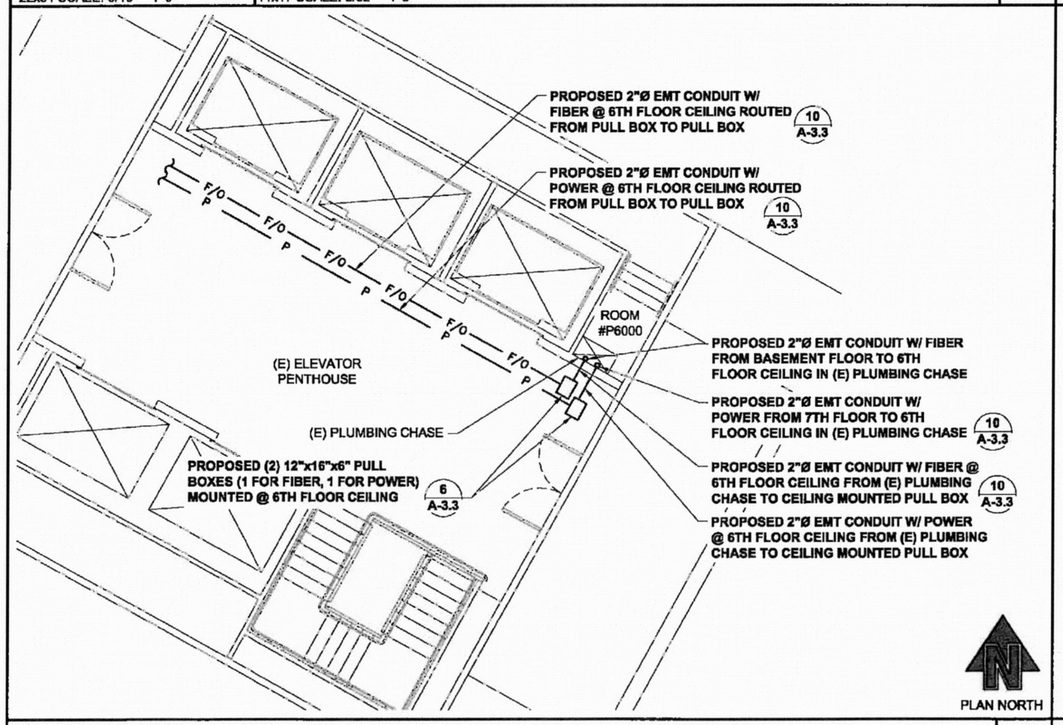

ELECTRICAL SITE PLAN @ 6TH FLOOR — 2

22x34 SCALE: 3/16" = 1'-0" | 11x17 SCALE: 3/32" = 1'-0"

NOTES:
FOR FLOOR PENETRATION SEE DETAIL 2/A-3.3
FOR WALL PENETRATION SEE DETAIL 1/A-3.3

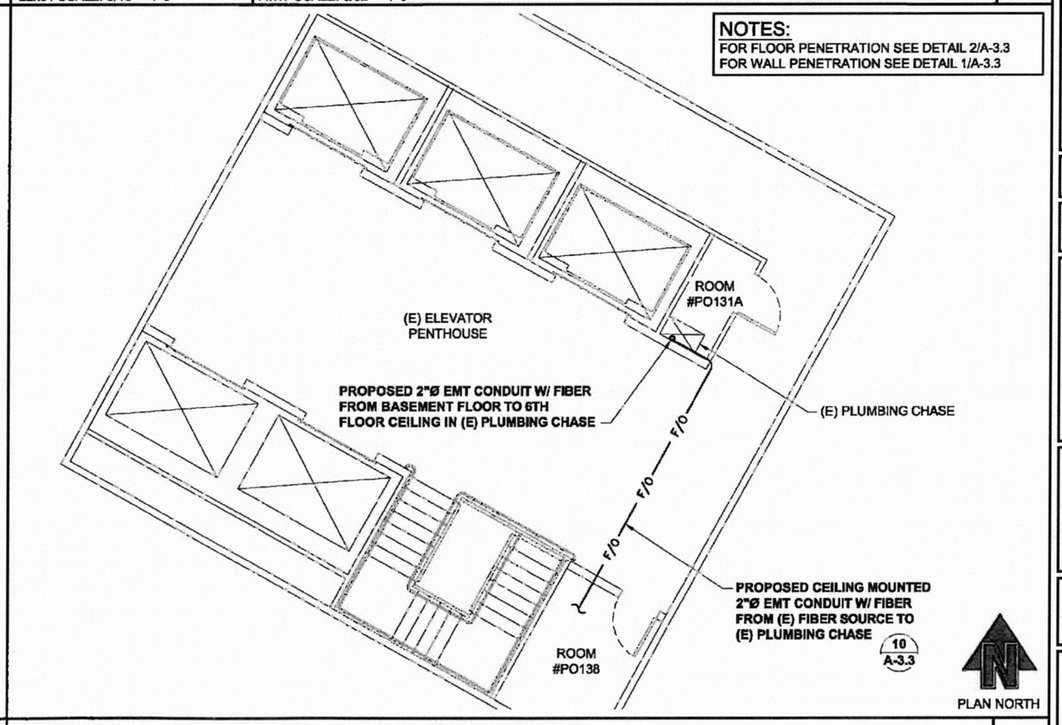

ELECTRICAL SITE PLAN @ BASEMENT FLOOR — 1

22x34 SCALE: 3/16" = 1'-0" | 11x17 SCALE: 3/32" = 1'-0"

T-Mobile

8960 NE ALDERWOOD RD
PORTLAND, OR 97220
OFFICE (503) 235-0127

PROJECT CONSULTANTS:
PACIFIC CORPORATION

PLANS PREPARED BY:
CORNERSTONE ENGINEERING, INC.
16828 WOODINVILLE-REDMOND RD NE, SUITE 210
WOODINVILLE, WA 98072
PHONE: 425.487.1732 FAX: 425.487.1734
EMAIL: cei@cornerstone-engr.com
WWW.CORNERSTONE-ENGR.COM

PROJECT INFO:

PO01871A

PORTLAND AIRPORT

7100 NE AIRPORT WAY
PORTLAND, OR 97218
MULTNOMAH COUNTY

ISSUED FOR:

CONSTRUCTION

REV:	DATE:	ISSUED FOR:	BY:
1	02-13-13	CONSTRUCTION	BMH
0	01-21-13	CONSTRUCTION	LJS
A	12-12-12	CLIENT REVIEW	DMO

DRAWN BY:	CHK.:	APV.:
DMO	JRF	MWO

CURRENT ISSUE DATE:

02-13-13

LICENSURE:

REGISTERED PROFESSIONAL ENGINEER 74538PE OREGON MARCH 9, 2004 MARK W. OLSON
2/13/13
EXPIRATION DATE: 12/31/14

DRAWING INFORMATION:

DO NOT SCALE DRAWINGS. CONTRACTOR MUST VERIFY ALL DIMENSIONS AND ADVISE CONSULTANTS OF ANY ERRORS AND OMISSIONS. ALL PREVIOUS ISSUES OF THIS DRAWING ARE SUPERSEDED BY THE LATEST REVISION. THE INFORMATION CONTAINED IN THIS SET OF DOCUMENTS IS PROPRIETARY BY NATURE. ANY USE OR DISCLOSURE OTHER THAN WHICH IS RELATED TO NAMED CLIENT IS STRICTLY PROHIBITED.

DRAWING TITLE:

ELECTRICAL SITE PLANS

DRAWING NUMBER:

1 E-1.1 1

CEI JOB NUMBER: 12-20055

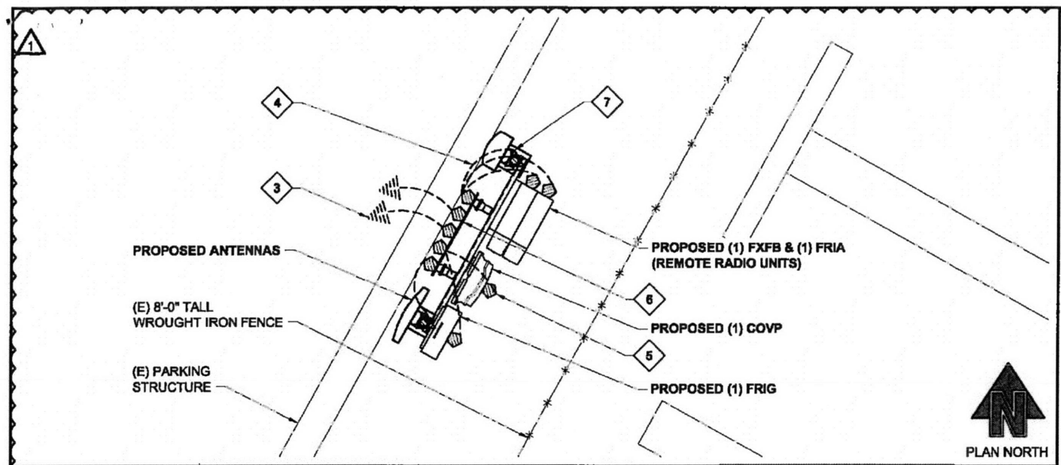

SCHEMATIC GROUNDING PLAN @ GAMMA SECTOR

22x34 SCALE: 3/4" = 1'-0" | 11x17 SCALE: 3/8" = 1'-0" | 11

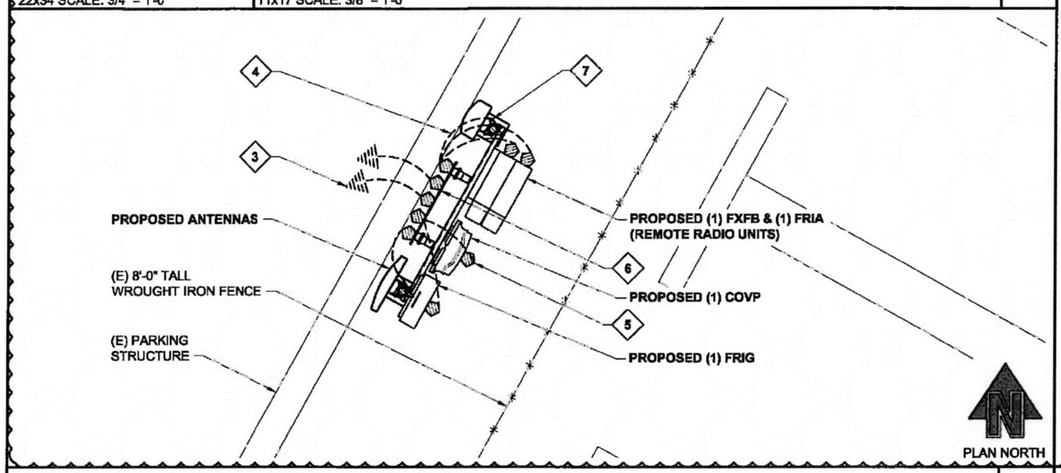

SCHEMATIC GROUNDING PLAN @ BETA SECTOR

22x34 SCALE: 3/4" = 1'-0" | 11x17 SCALE: 3/8" = 1'-0" | 7

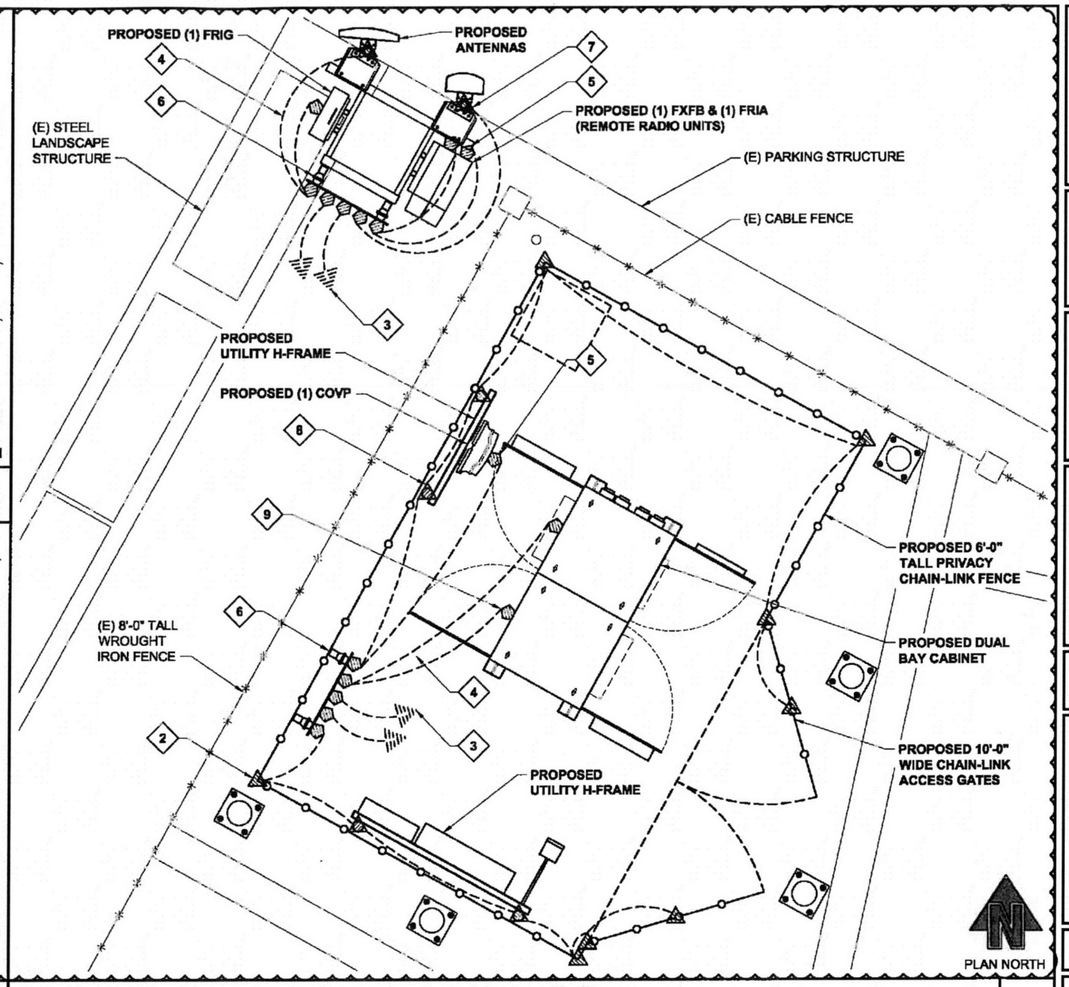

SCHEMATIC GROUNDING PLAN @ EQUIPMENT

22x34 SCALE: 1/2" = 1'-0" | 11x17 SCALE: 1/4" = 1'-0" | 5

1. GROUNDING SHALL COMPLY WITH LATEST EDITION OF THE NATIONAL ELECTRICAL CODE.
2. MINIMUM BENDING RADIUS FOR GROUND CONDUCTOR IS 8".
3. NO SPLICES PERMITTED IN GROUND CONDUCTORS.
4. ALL GROUNDING CONNECTORS TO BE CLEAN AND FREE OF PAINT AT THEIR MATING SURFACES AND INSTALLED PER MANUFACTURER'S RECOMMENDATIONS. USE PENETROX OR EQUIVALENT ANTIOXIDANT GREASE.
5. ALL GROUND BAR CONNECTIONS ARE TO BE 2 HOLE LUG COMPRESSION TYPE. STACKED CONNECTIONS ARE NOT ACCEPTABLE. BACK TO BACK CONNECTIONS ON OPPOSITE SIDES OF THE GROUND BAR WILL BE PERMITTED.
6. ENSURE ALL MECHANICAL CONNECTORS ARE TORQUED TO THE MANUFACTURER'S SPECIFIED VALUES.
7. MULTIPLE BONDS ON GROUND RODS TO BE SEPARATED BY AT LEAST 6".
8. MAXIMUM RESISTANCE OF THE COMPLETED GROUND SYSTEM SHALL NOT EXCEED A RESISTANCE OF 5 OHMS TO EARTH.
9. GROUND WIRES SHALL NOT BE INSTALLED THROUGH HOLES IN ANY METAL OBJECTS OR SUPPORTS; TO PRECLUDE ESTABLISHING A "CHOKE" POINT.
10. GROUND BARS SHALL NOT BE FIELD MODIFIED.
11. GROUND RING BURIAL DEPTH SHALL BE 30".
12. A CERTIFIED CONTRACTOR WILL MAKE ALL MEASUREMENTS REQUIRED TO TEST THE GROUNDING SYSTEM USING A MEGGER OR EQUIVALENT. THE ACCEPTABLE RESISTANCE MEASURED FOR THE GROUNDING SYSTEM WILL NOT EXCEED 5 OHMS RESISTANCE. THREE DISTANCES SHALL BE USED: 1 AT 100 FEET, 1 AT 70 FEET, AND 1 AT 35 FEET. THESE DISTANCES ARE SUBJECT TO A SITE BY SITE BASIS. T-MOBILE-WTS SHALL BE GIVEN 24 HOURS NOTICE. ALL COSTS ASSOCIATED WITH GROUND TESTING WILL BE AT THE EXPENSE OF THE CONTRACTOR.

GROUNDING NOTES

22x34 SCALE: NTS | 11x17 SCALE: NTS | 3

2. PROPOSED CADWELD CONNECTION TO FENCE POST. SEE DETAIL 9/E-2.1
3. PROPOSED #2 STRANDED GREEN INSULATED COPPER GROUND LEAD, TYP. (TIE INTO EXISTING BUILDING GROUNDING)
4. PROPOSED #2 STRANDED GREEN INSULATED COPPER GROUND LEAD, TYP. (V.I.F.)
5. PROPOSED GROUND CONNECTION TO RRU. SEE 12/E-2.1.
6. PROPOSED GROUND BUSS BAR. SEE 10/E-2.1 & 11/E-2.1
7. PROPOSED CADWELD CONNECTION TO PIPE MAST. SEE DETAIL 9/E-2.1
8. PROPOSED CADWELD CONNECTION TO H-FRAME POST. SEE DETAIL 9/E-2.1
9. CABINET GROUND WIRE STUDS. SEE DETAIL 12/E-2.1

KEYED NOTES

22x34 SCALE: NTS | 11x17 SCALE: NTS | 2

SYMBOL	DESCRIPTION
	MASTER GROUND BAR 1/4"x4"x24" COPPER
	ACCESSORY GROUND BAR 1/4"x4"x12" OR 1/4"x4"x20" COPPER
	GROUND INSPECTION WELL
	5/8"x8'-0" COPPER CLAD STEEL GROUND ROD
	COMPRESSION LUG/MECHANICAL CONNECTION
	CADWELD CONNECTION
	SIDE SPLICE CADWELD
	FIELD VERIFY & TIE INTO EXISTING GROUNDING

LEGEND

22x34 SCALE: NTS | 11x17 SCALE: NTS | 1

T-Mobile
8960 NE ALDERWOOD RD
PORTLAND, OR 97220
OFFICE (503) 235-0127

PROJECT CONSULTANTS:
PACIFIC CORPORATION

PLANS PREPARED BY:
CORNERSTONE ENGINEERING, INC.
16928 WOODINVILLE-REDMOND RD NE, SUITE 210
WOODINVILLE, WA 98072
PHONE: 425.487.1732 FAX: 425.487.1734
EMAIL: cei@cornerstone-engr.com
WWW.CORNERSTONE-ENGR.COM

PROJECT INFO:

PO01871A

PORTLAND AIRPORT

7100 NE AIRPORT WAY
PORTLAND, OR 97218
MULTNOMAH COUNTY

ISSUED FOR:

CONSTRUCTION

REV:	DATE:	ISSUED FOR:	BY:
1	02-13-13	CONSTRUCTION	BMH
0	01-21-13	CONSTRUCTION	LJS
A	12-12-12	CLIENT REVIEW	DMO

DRAWN BY:	CHK.:	APV.:
DMO	JRF	MWO

CURRENT ISSUE DATE: 02-13-13

LICENSURE:

REGISTERED PROFESSIONAL ENGINEER 74538PE OREGON MARCH 9, 2001 MARK W. OLSON 2/13/13

EXPIRATION DATE: 12/31/14

DRAWING INFORMATION:

DO NOT SCALE DRAWINGS. CONTRACTOR MUST VERIFY ALL DIMENSIONS AND ADVISE CONSULTANTS OF ANY ERRORS AND OMISSIONS. ALL PREVIOUS ISSUES OF THIS DRAWING ARE SUPERSEDED BY THE LATEST REVISION. THE INFORMATION CONTAINED IN THIS SET OF DOCUMENTS IS PROPRIETARY BY NATURE. ANY USE OR DISCLOSURE OTHER THAN WHICH IS RELATED TO NAMED CLIENT IS STRICTLY PROHIBITED.

DRAWING TITLE:

SCHEMATIC GROUNDING PLANS & NOTES

DRAWING NUMBER:

E-2 | 1

CEI JOB NUMBER: 12-20055

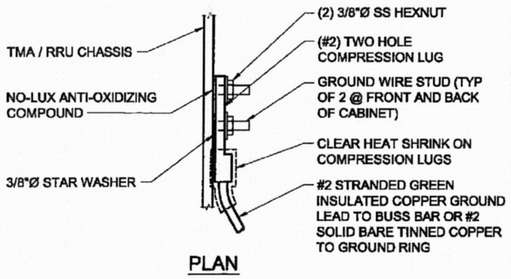

PLAN

NOTE:
FOR GROUNDING CONNECTIONS TO PAINTED CABINETS CHASSIS, GRIND OFF ALL ENAMEL COATINGS TO BARE METAL AT LUG CONTACT AREA PRIOR TO MAKING BOLTED LUG CONNECTION. APPLY NO-LUX TO ALL EXPOSED BARE METAL.

GROUND ATTACHMENT — 12

22x34 SCALE: NTS | 11x17 SCALE: NTS

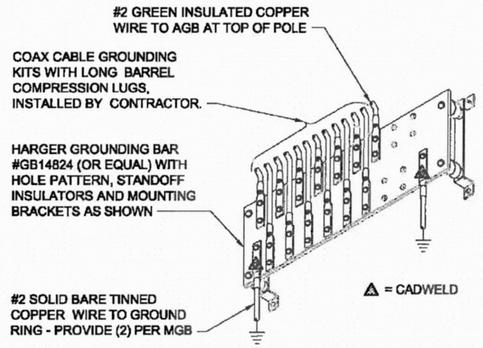

TYPICAL MASTER GROUND BAR — 11

22x34 SCALE: NTS | 11x17 SCALE: NTS

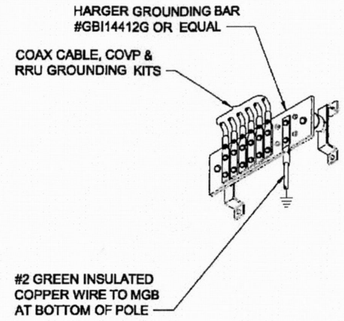

ACCESSORY GROUND BUSS BAR — 10

22x34 SCALE: NTS | 11x17 SCALE: NTS

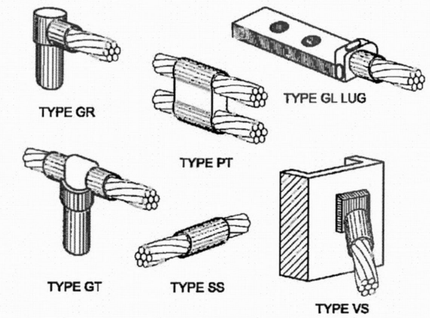

NOTE:
CADWELD "TYPES" SHOWN ABOVE ARE EXAMPLES - CONSULT WITH PROJECT MANAGER FOR SPECIFIC TYPES OF CADWELDS TO BE USED FOR THIS PROJECT.

CADWELD CONNECTIONS — 9

22x34 SCALE: NTS | 11x17 SCALE: NTS

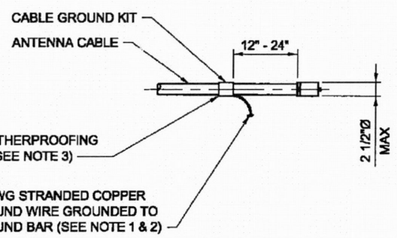

NOTES:
1. DO NOT INSTALL CABLE GROUND KIT AT A BEND AND ALWAYS DIRECT GROUND WIRE DOWN TO GROUND BAR.
2. GROUNDING KIT SHALL BE ANDREW SUREGROUND TYPE KIT WITH TWO-HOLE LUG.
3. WEATHER PROOFING SHALL BE TWO-PART TAPE KIT, COLD SHRINK SHALL NOT BE USED.

CABLE GROUNDING — 8

22x34 SCALE: NTS | 11x17 SCALE: NTS

NOTES:
1. DO NOT INSTALL CABLE GROUND KIT AT A BEND AND ALWAYS DIRECT GROUND WIRE DOWN TO ANTENNA GROUND BAR.
2. WEATHER PROOFING SHALL BE TWO-PART TAPE KIT. COLD SHRINK SHALL NOT BE USED.

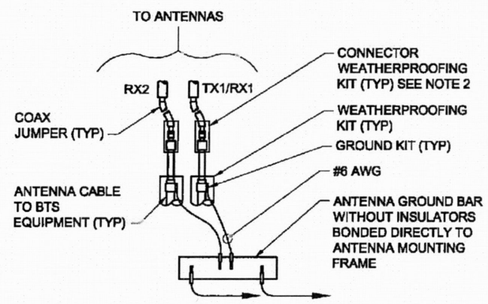

GROUNDING AT ANTENNA — 7

22x34 SCALE: NTS | 11x17 SCALE: NTS

NOT USED — 6

22x34 SCALE: NTS | 11x17 SCALE: NTS

NOT USED — 5

22x34 SCALE: NTS | 11x17 SCALE: NTS

NOT USED — 4

22x34 SCALE: NTS | 11x17 SCALE: NTS

NOT USED — 3

22x34 SCALE: NTS | 11x17 SCALE: NTS

NOT USED — 2

22x34 SCALE: NTS | 11x17 SCALE: NTS

NOT USED — 1

22x34 SCALE: NTS | 11x17 SCALE: NTS

T-Mobile
8960 NE ALDERWOOD RD
PORTLAND, OR 97220
OFFICE (503) 235-0127

PROJECT CONSULTANTS:
PACIFIC CORPORATION

PLANS PREPARED BY:
CORNERSTONE ENGINEERING, INC.
16928 WOODINVILLE-REDMOND RD NE, SUITE 210
WOODINVILLE, WA 98072
PHONE: 425.487.1732 FAX: 425.487.1734
EMAIL: cei@cornerstone-engr.com
WWW.CORNERSTONE-ENGR.COM

PROJECT INFO:

PO01871A

PORTLAND AIRPORT

7100 NE AIRPORT WAY
PORTLAND, OR 97218
MULTNOMAH COUNTY

ISSUED FOR:

CONSTRUCTION

REV:	DATE:	ISSUED FOR:	BY:
1	02-13-13	CONSTRUCTION	BMH
0	01-21-13	CONSTRUCTION	LJS
A	12-12-12	CLIENT REVIEW	DMO

DRAWN BY:	CHK.:	APV.:
DMO	JRF	MWO

CURRENT ISSUE DATE: 02-13-13

LICENSURE:

REGISTERED PROFESSIONAL ENGINEER 74538PE OREGON MARCH 9, 2004 MARK W. OLSON 2/13/13

EXPIRATION DATE: 12/31/14

DRAWING INFORMATION:

DO NOT SCALE DRAWINGS. CONTRACTOR MUST VERIFY ALL DIMENSIONS AND ADVISE CONSULTANTS OF ANY ERRORS AND OMISSIONS. ALL PREVIOUS ISSUES OF THIS DRAWING ARE SUPERSEDED BY THE LATEST REVISION. THE INFORMATION CONTAINED IN THIS SET OF DOCUMENTS IS PROPRIETARY BY NATURE. ANY USE OR DISCLOSURE OTHER THAN WHICH IS RELATED TO NAMED CLIENT IS STRICTLY PROHIBITED.

DRAWING TITLE: GROUNDING DETAILS

DRAWING NUMBER: 1 E-2.1

CEI JOB NUMBER: 12-20055

RF DATA SHEET

SECTOR	COLOR	# OF ANTENNAS	ANTENNA VENDOR	ANTENNA MODEL	AZIMUTH (TN)	MECHANICAL DOWNTILT	ELECTRICAL DOWNTILT	RAD CENTER	HYBRID CABLE LENGTH
ALPHA (S-1)	RED	1	ANDREW	TMBXX-6516-R2M	5°	TBD	0°	75'-6"	N/A
ALPHA (S-1)	RED	1	ANDREW	TMZXXX-6516-A3M	5°	TBD	0°	75'-6"	
BETA (S-2)	GREEN	1	ANDREW	TMBXX-6516-R2M	300°	TBD	2°	75'-6"	150'
BETA (S-2)	GREEN	1	ANDREW	TMZXXX-6516-A3M	300°	TBD	2°	75'-6"	
GAMMA (S-3)	BLUE	1	ANDREW	TMBXX-6516-R2M	300°	TBD	2°	75'-6"	375'
GAMMA (S-3)	BLUE	1	ANDREW	TMZXXX-6516-A3M	300°	TBD	2°	75'-6"	

COAX CABLE

SECTOR	# OF COAX	SIZE	LENGTH
ALPHA (S-1)	2	1/2"Ø	±10'
BETA (S-2)	2	1/2"Ø	±390'
GAMMA (S-3)	2	1/2"Ø	±110'

UL & DL FREQUENCIES:

SEATTLE MARKET:

PCS:
UL: 1885 - 1895 Mhz, 1900 - 1905 Mhz
DL: 1965 - 1975 Mhz, 1980 - 1985 Mhz

AWS:
UL: 1745 - 1755 Mhz, 1730 - 1735 Mhz
DL: 2145 - 2155 Mhz, 2130 - 2135 Mhz

REMOTE RADIO UNITS

SECTOR	FRIG	FRIA	FXFB
ALPHA (S-1)	1	1	1
BETA (S-2)	1	1	1
GAMMA (S-3)	1	1	1

RF DATA SHEET

22x34 SCALE: NTS | 11x17 SCALE: NTS | 11

NOT USED

22x34 SCALE: NTS | 11x17 SCALE: NTS | 10

ALL SECTORS

- (3) TMBXX-6516-R2M QUAD ANTENNAS
- (3) TMZXXX-6516-A3M HEX ANTENNAS
- (9) MODULES (3 FXFB + 3 FRIA + 3 FRIG)
- (2) HYBRID CABLES & (3) COVPS
- (6) 1/2"Ø COAX

City of Portland
REVIEWED FOR CODE COMPLIANCE
APR 08 2013
Permit Number

PROJECT SUMMARY

22x34 SCALE: NTS | 11x17 SCALE: NTS | 9

1. ALL ANTENNA AND COAXIAL ANTENNA CABLE TO BE FURNISHED BY T-MOBILE AND INSTALLED BY CONTRACTOR.
2. COAX COLOR CODING: ANTENNAS TO BE NUMBERED IN A CLOCKWISE MANNER FROM TRUE NORTH AND COLOR CODED TO ESTABLISHED T-MOBILE STANDARDS.
3. COAX COLOR CODING APPLIES TO SECTORIZED SITES. FOR OMNI SITES, USE THE ATO, BTO & GTO COLOR CODES ONLY.
4. COAX SHALL BE TAGGED WITH COLOR CODING AT (2) PLACES USING 1" WIDE WEATHER PROOF COLORED VINYL TAPE AT THE FOLLOWING LOCATIONS:
   #1 - AT ANTENNA CONNECTION
   #2 - AT ENTRY TO EQUIPMENT CABINET
5. RUN COAXIAL CABLE WITH MINIMUM 12" SLACK @ 12" FROM EDGE OF EQUIPMENT CABINETS, ACROSS WAVE GUIDE BRIDGE (IF APPLICABLE), UP TO TOWER LEG (IF APPLICABLE), & DISTRIBUTE TO EACH ANTENNA DEVICE. FURNISH AND INSTALL A MINIMUM OF (3) GROUND KITS PER COAXIAL CABLE ACCORDING TO ELECTRICAL DRAWINGS. VERIFY NUMBER OF ANTENNAS, CABLE & CABLE DIAMETER WITH PROJECT MANAGER.

COAXIAL CABLE NOTES:

1. ALL COAXIAL CABLE CONNECTIONS TO BE WEATHERPROOFED.
2. CONTRACTOR TO PROVIDE DRIP LOOPS IN CABLES AND JUMPERS WHERE NECESSARY.
3. TAGGING:
   3.1 ALL COAXIAL CABLES TO BE MARKED WITH COLOR CODED TAPE TO INDICATE THE ANTENNA SECTOR.
   3.2 COLORED ELECTRICAL TAPE SHALL MARK EACH END OF CABLE AND EACH END OF JUMPERS AS CLOSE TO EACH END AS POSSIBLE. (NOT TO INTERFERE WITH WEATHERPROOFING).
4. COAXIAL CABLE SPECIFICATIONS REQUIRE CABLE SUPPORT EVERY 3'-0" ON CENTER. CONTRACTOR SHALL SUPPLY SUPPORTS AS REQUIRED TO MEET THIS REQUIREMENT.

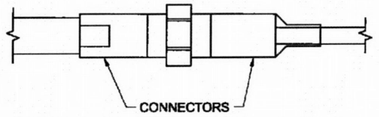

STEP 1

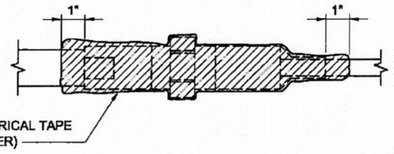

STEP 2

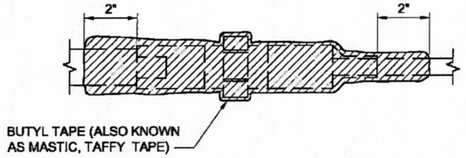

STEP 3

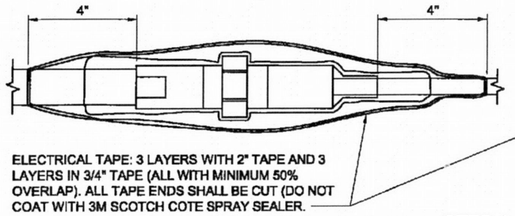

STEP 4

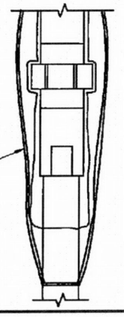

NOTE:
VERTICAL CONNECTIONS SHALL BE TAPED FROM THE BOTTOM UP SO OVERLAP MOVES WATER AWAY FROM CONNECTION, TYP.

PROVIDE HEAT SHRINK IN PLACE OF TAPE FOR QUAD POLES AND LNA's (TYP.)

COAXIAL CABLE WEATHERPROOFING

22x34 SCALE: NTS | 11x17 SCALE: NTS | 3

NOT USED

22x34 SCALE: NTS | 11x17 SCALE: NTS | 6

ANTENNA & COAX GENERAL NOTES

22x34 SCALE: NTS | 11x17 SCALE: NTS | 5

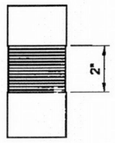

FIGURE 1

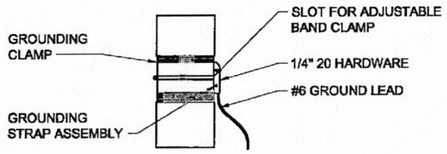

FIGURE 2

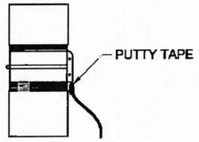

FIGURE 3

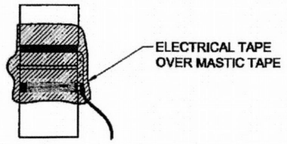

FIGURE 4

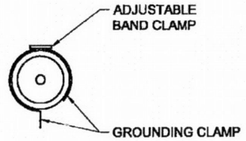

FIGURE 5

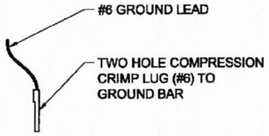

FIGURE 6

COAXIAL CABLE GROUNDING

22x34 SCALE: NTS | 11x17 SCALE: NTS | 1

T-Mobile
8960 NE ALDERWOOD RD
PORTLAND, OR 97220
OFFICE (503) 235-0127

PROJECT CONSULTANTS:
PACIFIC CORPORATION

PLANS PREPARED BY:
CORNERSTONE ENGINEERING, INC.
16928 WOODINVILLE-REDMOND RD NE, SUITE 210
WOODINVILLE, WA 98072
PHONE: 425.487.1732 FAX: 425.487.1734
EMAIL: cei@cornerstone-engr.com
WWW.CORNERSTONE-ENGR.COM

PROJECT INFO:

PO01871A

PORTLAND AIRPORT

7100 NE AIRPORT WAY
PORTLAND, OR 97218
MULTNOMAH COUNTY

ISSUED FOR:

CONSTRUCTION

REV:	DATE:	ISSUED FOR:	BY:
1	02-13-13	CONSTRUCTION	BMH
0	01-21-13	CONSTRUCTION	LJS
A	12-12-12	CLIENT REVIEW	DMO

DRAWN BY:	CHK.:	APV.:
DMO	JRF	MWO

CURRENT ISSUE DATE: 02-13-13

LICENSURE:

REGISTERED PROFESSIONAL ENGINEER 74538PE OREGON MARCH 9, 2004 MARK W. OLSON 2/13/13
EXPIRATION DATE: 12/31/14

DRAWING INFORMATION:

DO NOT SCALE DRAWINGS. CONTRACTOR MUST VERIFY ALL DIMENSIONS AND ADVISE CONSULTANTS OF ANY ERRORS AND OMISSIONS. ALL PREVIOUS ISSUES OF THIS DRAWING ARE SUPERSEDED BY THE LATEST REVISION. THE INFORMATION CONTAINED IN THIS SET OF DOCUMENTS IS PROPRIETARY BY NATURE. ANY USE OR DISCLOSURE OTHER THAN WHICH IS RELATED TO NAMED CLIENT IS STRICTLY PROHIBITED.

DRAWING TITLE: RF DETAILS

DRAWING NUMBER: RF-1 | 1

CEI JOB NUMBER: 12-20055

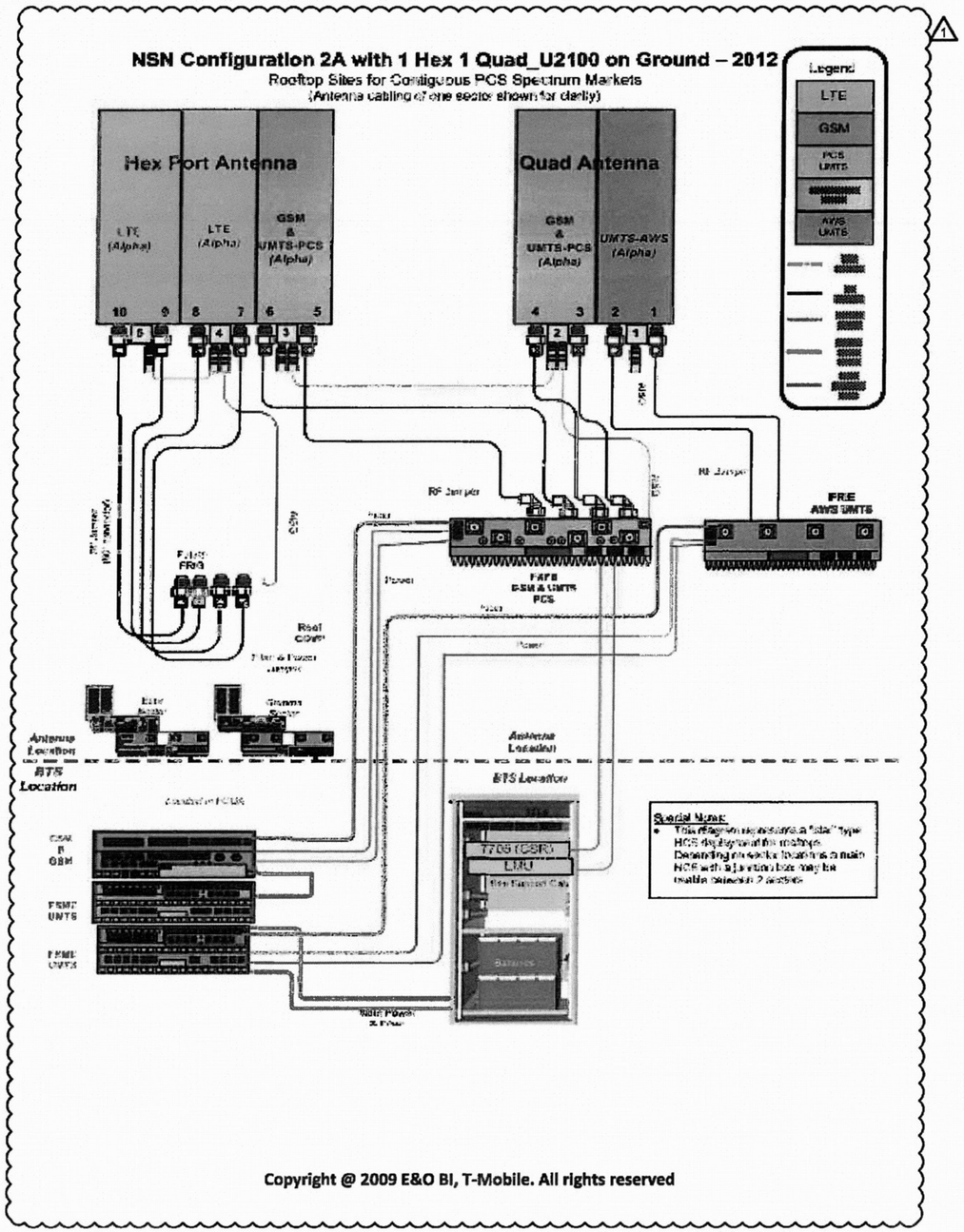

ALL SECTORS

22x34 SCALE: NTS | 11x17 SCALE: NTS | 3

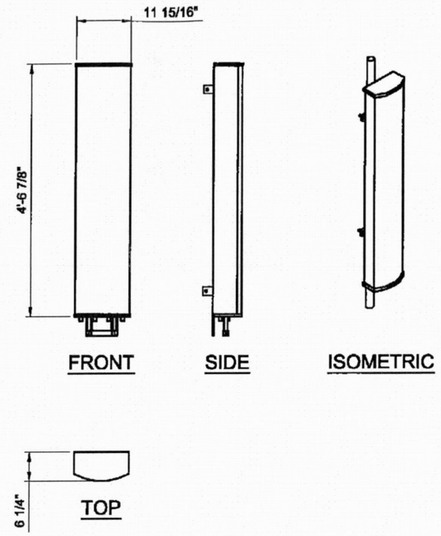

ANDREW TMBXX-6516-R2M ANTENNA

MECHANICAL SPECIFICATIONS

PART NUMBER	HEIGHT	WIDTH	DEPTH	WEIGHT
TMBXX-6516-R2M	59 in (with actuator)	11.9 in	6.3 in	34.6 lbs
CONNECTORS	STANDARD MOUNTING HARDWARE			
(2) 7-16 DIN	INCLUDED			

ELECTRICAL SPECIFICATIONS

FREQUENCY	POLARIZATION	GAIN	AZIMUTH B.W.	ELEVATION B.W.
1710-2155 MHz	±45°	17.5° ± 0.8	64.5° ± 8	7.2° ± 1.2
VSWR	MAX INPUT POWER			
1.35:1 / 16.5	250 WATTS			

ANTENNA DETAIL

22x34 SCALE: NTS | 11x17 SCALE: NTS | 6

NOT USED

22x34 SCALE: NTS | 11x17 SCALE: NTS | 2

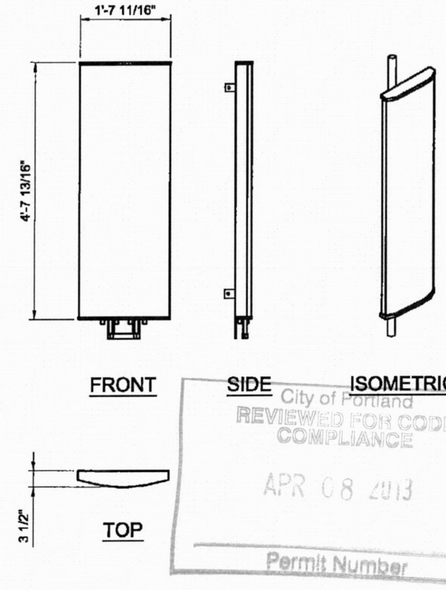

City of Portland
REVIEWED FOR CODE COMPLIANCE
APR 08 2013
Permit Number

ANDREW TMZXXX-6516-A3M ANTENNA

MECHANICAL SPECIFICATIONS

PART NUMBER	HEIGHT	WIDTH	DEPTH	WEIGHT
TMZXXX-6516-A3M	60 in (with actuator)	19.69 in	3.5 in	38.36 lbs
CONNECTORS	STANDARD MOUNTING HARDWARE			
(6) 7-16 DIN	INCLUDED			

ELECTRICAL SPECIFICATIONS

FREQUENCY	POLARIZATION	GAIN	AZIMUTH B.W.	ELEVATION B.W.
1710-2155 MHz	±45°	17.4° ± 0.8	63° ± 8	7.3° ± 1
VSWR	MAX INPUT POWER			
1.35:1 / 16.5	250 WATTS			

ANTENNA DETAIL

22x34 SCALE: NTS | 11x17 SCALE: NTS | 5

NOT USED

22x34 SCALE: NTS | 11x17 SCALE: NTS | 1

T-Mobile
8960 NE ALDERWOOD RD
PORTLAND, OR 97220
OFFICE (503) 235-0127

PROJECT CONSULTANTS:
EDGELINE PACIFIC CORPORATION

PLANS PREPARED BY:
CORNERSTONE ENGINEERING, INC.
16928 WOODINVILLE-REDMOND RD NE, SUITE 210
WOODINVILLE, WA 98072
PHONE: 425.487.1732 FAX: 425.487.1734
EMAIL: cei@cornerstone-engr.com
WWW.CORNERSTONE-ENGR.COM

PROJECT INFO:

PO01871A

PORTLAND AIRPORT

7100 NE AIRPORT WAY
PORTLAND, OR 97218
MULTNOMAH COUNTY

ISSUED FOR:

CONSTRUCTION

REV:	DATE:	ISSUED FOR:	BY:
1	02-13-13	CONSTRUCTION	BMH
0	01-21-13	CONSTRUCTION	LJS
A	12-12-12	CLIENT REVIEW	DMO

DRAWN BY:	CHK.:	APV.:
DMO	JRF	MWO

CURRENT ISSUE DATE: 02-13-13

LICENSURE:

REGISTERED PROFESSIONAL ENGINEER 74538PE OREGON MARCH 9, 2004 MARK W. OLSON 2/12/13

EXPIRATION DATE: 12/31/14

DRAWING INFORMATION:

DO NOT SCALE DRAWINGS. CONTRACTOR MUST VERIFY ALL DIMENSIONS AND ADVISE CONSULTANTS OF ANY ERRORS AND OMISSIONS. ALL PREVIOUS ISSUES OF THIS DRAWING ARE SUPERSEDED BY THE LATEST REVISION. THE INFORMATION CONTAINED IN THIS SET OF DOCUMENTS IS PROPRIETARY BY NATURE. ANY USE OR DISCLOSURE OTHER THAN WHICH IS RELATED TO NAMED CLIENT IS STRICTLY PROHIBITED.

DRAWING TITLE:

RF DETAILS

DRAWING NUMBER:

RF-2 | 1

CEI JOB NUMBER: 12-20055

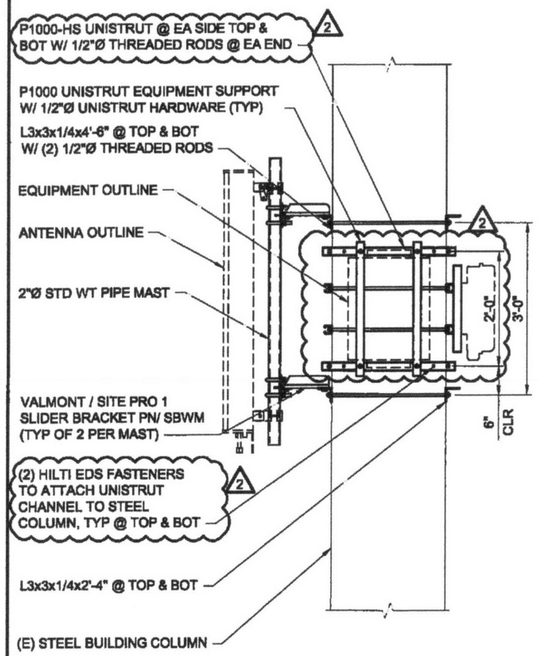

ANTENNA ELEVATION

22x34 SCALE: 3/4" = 1'-0" | 11x17 SCALE: 3/8" = 1'-0"

6

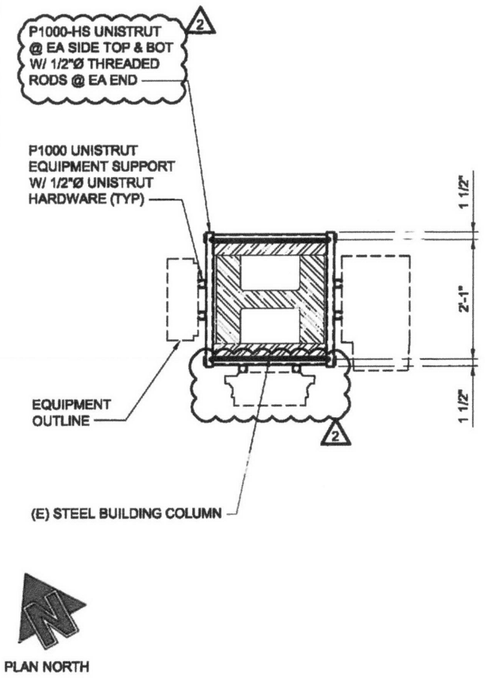

EQUIPMENT PLAN ALPHA SECTOR

22x34 SCALE: 3/4" = 1'-0" | 11x17 SCALE: 3/8" = 1'-0"

5

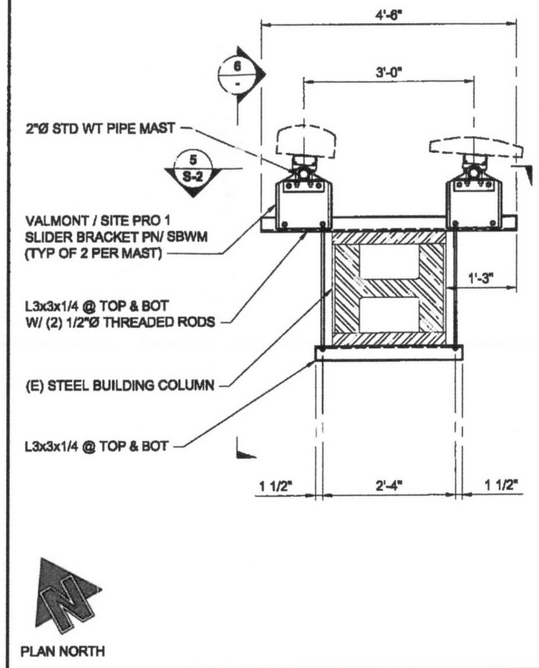

ANTENNA PLAN ALPHA SECTOR

22x34 SCALE: 3/4" = 1'-0" | 11x17 SCALE: 3/8" = 1'-0"

4

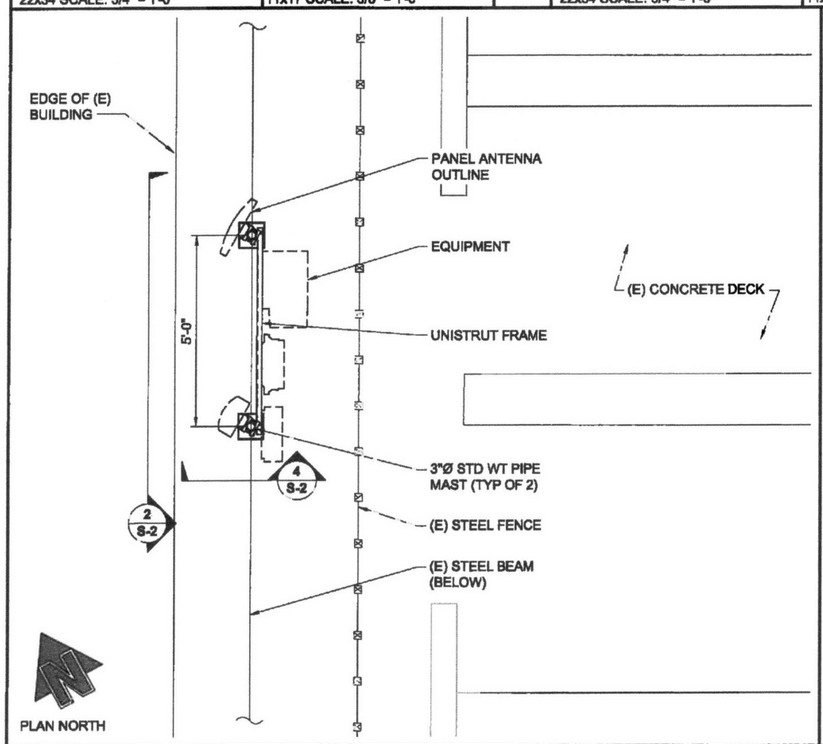

ANTENNA PLAN BETA - GAMMA SECTOR

22x34 SCALE: 3/8" = 1'-0" | 11x17 SCALE: 3/16" = 1'-0"

3

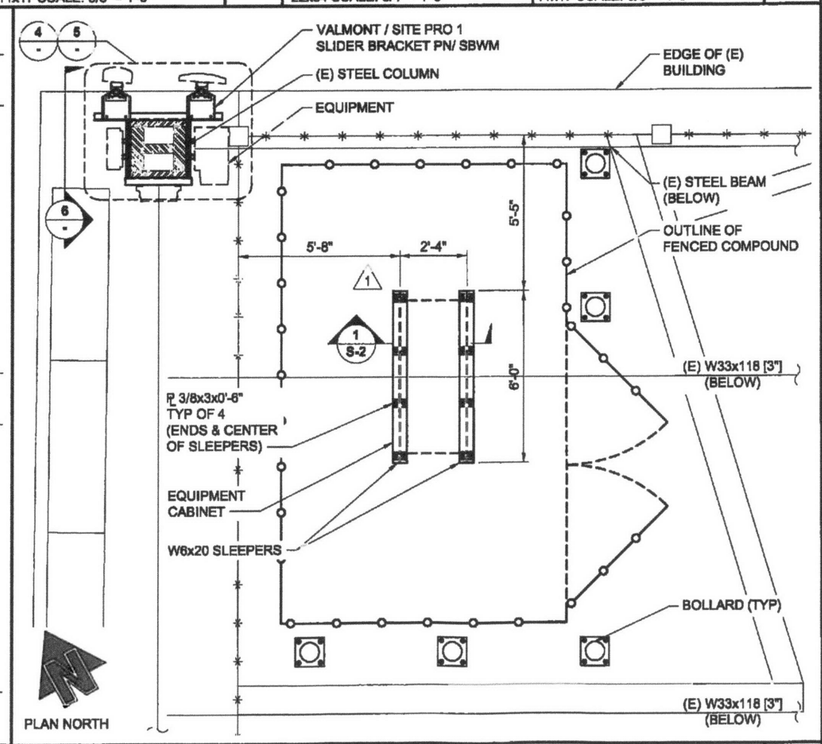

EQUIPMENT PLAN

22x34 SCALE: 3/8" = 1'-0" | 11x17 SCALE: 3/16" = 1'-0"

2

GENERAL

CONTRACTOR SHALL BE RESPONSIBLE FOR ERECTION STABILITY AND TEMPORARY BRACING AS NECESSARY UNTIL PERMANENT SUPPORT AND STIFFENERS ARE SAFELY INSTALLED.

DRAWINGS INDICATE GENERAL AND TYPICAL DETAILS OF CONSTRUCTION. WHERE CONDITIONS ARE NOT SPECIFICALLY INDICATED, BUT ARE OF A SIMILAR CHARACTER TO DETAILS SHOWN, SIMILAR DETAILS OF CONSTRUCTION SHALL BE USED, SUBJECT TO REVIEW AND APPROVAL BY THE ENGINEER.

STRUCTURAL DRAWINGS SHALL BE USED IN CONJUNCTION WITH ARCHITECTURAL AND ELECTRICAL DRAWINGS FOR BIDDING AND CONSTRUCTION.

CONTRACTOR SHALL FIELD VERIFY ALL DIMENSIONS, ELEVATIONS AND DETAILS PRIOR TO FABRICATION OR CONSTRUCTION.

CODE

ALL MATERIALS, WORKMANSHIP, DESIGN AND CONSTRUCTION SHALL CONFORM TO THE DRAWINGS AND THE OREGON STRUCTURAL SPECIALTY CODE AMENDMENTS (OSSC), 2010 EDITION. STANDARDS WHERE REFERENCED ON THE DRAWINGS SHALL BE THE LATEST EDITION.

DESIGN LOADS

OCCUPANCY CATEGORY = III
SNOW LOAD = 25 psf
WIND LOAD: (OTHER STRUCTURE)
- BASIC WIND SPEED = 95 MPH (3-SECOND GUST)
- EXPOSURE "C"
- IMPORTANCE FACTOR = 1.15
- TOPOGRAPHIC FACTOR = 1.0

SEISMIC LOAD: (COMPONENTS)
- S_s = 0.914g, S_1 = 0.318g, S_{DS} = 0.691g, S_{D1} = 0.374g
- SITE CLASS "D" (ASSUMED)
- IMPORTANCE FACTOR = 1.25
- SEISMIC DESIGN CATEGORY "D"

STRUCTURAL STEEL

ALL STRUCTURAL STEEL WORK SHALL BE IN ACCORDANCE WITH THE REQUIREMENTS OF OREGON STRUCTURAL SPECIALTY CODE AMENDMENTS UNLESS NOTED OTHERWISE.

STRUCTURAL MATERIAL: (UNLESS NOTED OTHERWISE)

WIDE FLANGE	-ASTM A992
CHANNELS, CONNECTION MATERIAL, EMBEDDED ITEMS, ANGLES, BASE PLATE, & MISC. STEEL	-ASTM A36
STRUCTURAL TUBE	-ASTM A500, GRADE B
STRUCTURAL PIPE	-ASTM A53, GRADE B

ALL WELDING SHALL BE DONE USING 70KSI LOW HYDROGEN ELECTRODES AND WELDING SHALL CONFORM TO AWS D1.1/D1.1M:2008. WHERE FILLET WELD SIZES ARE NOT SHOWN, PROVIDE THE MINIMUM SIZE PER TABLE 5.8 IN AWS D1.1/D1.1M:2008.

BOLTED CONNECTIONS SHALL USE BEARING TYPE GALVANIZED ASTM A307 BOLTS AND SHALL HAVE A MINIMUM OF TWO BOLTS UNLESS NOTED OTHERWISE. ALL BOLTED CONNECTIONS REQUIRE THE USE OF ASTM F436 WASHERS AT BOTH BOLT HEAD AND NUT. SHIM WASHERS SHALL BE USED FOR ALL BOLTED CONNECTIONS TO INCLINED SURFACES.

ALL STEEL SHALL BE HOT DIP GALVANIZED IN ACCORDANCE WITH ASTM A123.

DRAWING NOTES

ALL EXISTING CONDITIONS AND EQUIPMENT ARE NOT SHOWN. CAREFUL COORDINATION WITH EXISTING STRUCTURE AND EQUIPMENT IN REQUIRED.

SEE ARCHITECTURAL DRAWINGS FOR OVERALL SITE PLAN AND LOCATIONS.

RECEIVED
MAR 28 2013
City of Portland
BDS
DOCUMENT SERVICES
APR 08 2013
Permit Number

STRUCTURAL NOTES

22x34 SCALE: NTS | 11x17 SCALE: NTS

1

T · Mobile
8960 NE ALDERWOOD RD
PORTLAND, OR 97220
OFFICE (503) 235-0127

PROJECT CONSULTANTS:
DELTA PACIFIC CORPORATION

PLANS PREPARED BY:
CORNERSTONE ENGINEERING, INC.
16928 WOODINVILLE-REDMOND RD NE, SUITE 210
WOODINVILLE, WA 98072
PHONE: 425.487.1732 FAX: 425.487.1734
EMAIL: cei@cornerstone-engr.com
WWW.CORNERSTONE-ENGR.COM

PROJECT INFO:

PO01871A

PORTLAND AIRPORT

7100 NE AIRPORT WAY
PORTLAND, OR 97218
MULTNOMAH COUNTY

ISSUED FOR:

CONSTRUCTION

REV:	DATE:	ISSUED FOR:	BY:
2	03-22-13	CONSTRUCTION	BMH
1	02-13-13	CONSTRUCTION	BMH
0	01-21-13	CONSTRUCTION	LJS

DRAWN BY:	CHK.:	APV.:
LJS	JMM	MWO

CURRENT ISSUE DATE: 03-22-13

LICENSURE:

REGISTERED PROFESSIONAL ENGINEER 74538PE OREGON MARCH 9, 2004 MARK W. OLSON
03/25/13
EXPIRATION DATE: 12/31/14

DRAWING INFORMATION:

DO NOT SCALE DRAWINGS. CONTRACTOR MUST VERIFY ALL DIMENSIONS AND ADVISE CONSULTANTS OF ANY ERRORS AND OMISSIONS. ALL PREVIOUS ISSUES OF THIS DRAWING ARE SUPERSEDED BY THE LATEST REVISION. THE INFORMATION CONTAINED IN THIS SET OF DOCUMENTS IS PROPRIETARY BY NATURE. ANY USE OR DISCLOSURE OTHER THAN WHICH IS RELATED TO NAMED CLIENT IS STRICTLY PROHIBITED.

DRAWING TITLE:

STRUCTURAL NOTES, PLANS & DETAILS

DRAWING NUMBER:

S-1 | 2

CEI JOB NUMBER: 12-20055

NOT USED
22x34 SCALE: NTS | 11x17 SCALE: NTS | 11

NOT USED
22x34 SCALE: NTS | 11x17 SCALE: NTS | 10

NOTE:
PRE DRILL HOLES INTO ANGLE BEFORE APPLYING POWER - ACTUATED FASTENERS

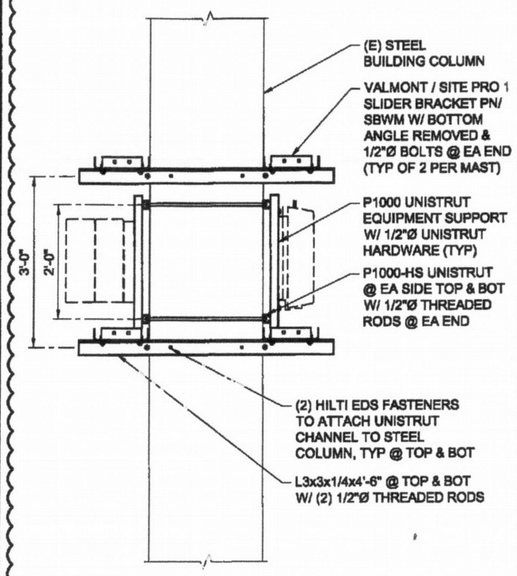

City of Portland
REVIEWED FOR CODE COMPLIANCE
APR 08 2013
Permit Number

NOT USED
22x34 SCALE: NTS | 11x17 SCALE: NTS | 8

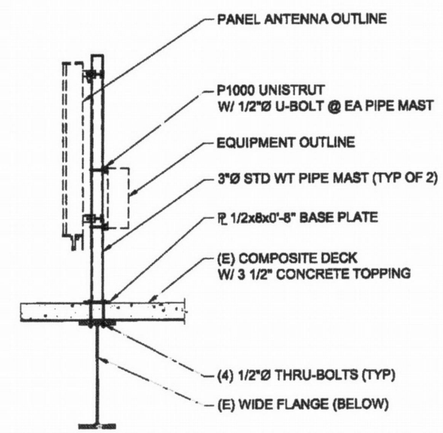

NOT USED
22x34 SCALE: NTS | 11x17 SCALE: NTS | 7

NOT USED
22x34 SCALE: NTS | 11x17 SCALE: NTS | 6

ANTENNA MOUNT ELEVATION
22x34 SCALE: NTS | 11x17 SCALE: NTS | 5

ANTENNA MAST SECTION
22x34 SCALE: 1/2" = 1'-0" | 11x17 SCALE: 1/4" = 1'-0" | 4

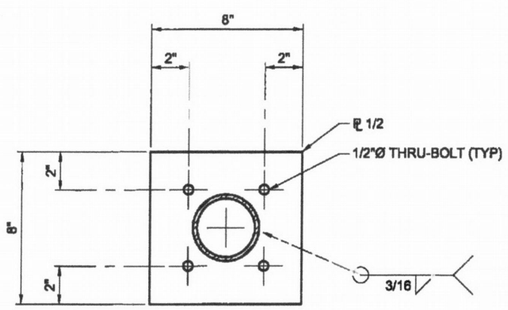

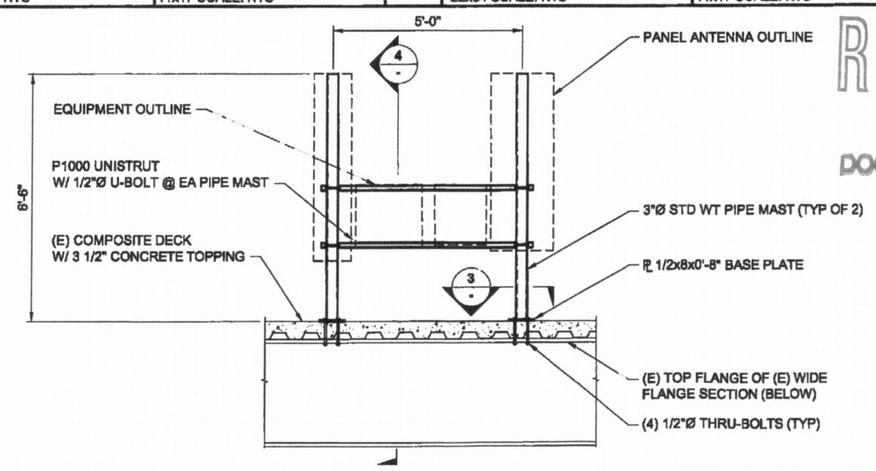

RECEIVED
MAR 28 2013
BDS
DOCUMENT SERVICES

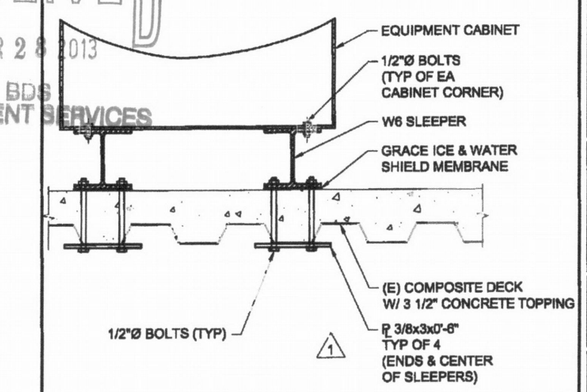

BASE PLATE CONNECTION
22x34 SCALE: 3" = 1'-0" | 11x17 SCALE: 1 1/2" = 1'-0" | 3

ANTENNA MAST CONNECTION
22x34 SCALE: 1/2" = 1'-0" | 11x17 SCALE: 1/4" = 1'-0" | 2

EQUIPMENT CONNECTION
22x34 SCALE: 1 1/2" = 1'-0" | 11x17 SCALE: 3/4" = 1'-0" | 1

T · Mobile ·

8960 NE ALDERWOOD RD
PORTLAND, OR 97220
OFFICE (503) 235-0127

PROJECT CONSULTANTS:
PACIFIC CORPORATION

PLANS PREPARED BY:
CORNERSTONE ENGINEERING, INC.
16828 WOODINVILLE-REDMOND RD NE, SUITE 210
WOODINVILLE, WA 98072
PHONE: 425.487.1732 FAX: 425.487.1734
EMAIL: cei@cornerstone-engr.com
WWW.CORNERSTONE-ENGR.COM

PROJECT INFO:

PO01871A

PORTLAND AIRPORT

7100 NE AIRPORT WAY
PORTLAND, OR 97218
MULTNOMAH COUNTY

ISSUED FOR:

CONSTRUCTION

REV:	DATE:	ISSUED FOR:	BY:
2	03-22-13	CONSTRUCTION	BMH
1	02-13-13	CONSTRUCTION	BMH
0	01-21-13	CONSTRUCTION	LJS

DRAWN BY:	CHK.:	APV.:
LJS	JMM	MWO

CURRENT ISSUE DATE: 03-22-13

LICENSURE:

REGISTERED PROFESSIONAL ENGINEER 74636PE OREGON MARCH 9, 2004 MARK W. OLSON
03/25/13
EXPIRATION DATE: 12/31/14

DRAWING INFORMATION:

DO NOT SCALE DRAWINGS. CONTRACTOR MUST VERIFY ALL DIMENSIONS AND ADVISE CONSULTANTS OF ANY ERRORS AND OMISSIONS. ALL PREVIOUS ISSUES OF THIS DRAWING ARE SUPERSEDED BY THE LATEST REVISION. THE INFORMATION CONTAINED IN THIS SET OF DOCUMENTS IS PROPRIETARY BY NATURE. ANY USE OR DISCLOSURE OTHER THAN WHICH IS RELATED TO NAMED CLIENT IS STRICTLY PROHIBITED.

DRAWING TITLE:

STRUCTURAL DETAILS

DRAWING NUMBER:

S-2 | 2

CEI JOB NUMBER: 12-20055