SUBMITTAL

Project

Maranatha

Date

Wednesday, September 18, 2013

Table Of Contents

Project: ~Untitled1 09/18/2013
Prepared By: 11:24AM

rtu 1 ..... **3**
Unit Report 4
Certified Drawing 5
Performance Summary 7

rtu 1

Tag Cover Sheet
Unit Report
Certified Drawing
Performance Report

Unit Parameters

Unit Model: **48TCED24ABA5-0F0A0**
Unit Size: ..... **24 (20 Tons)**
Volts-Phase-Hertz: **230-3-60**
Heating Type: ..... **Gas**
Duct Cfg: ..... **Vertical Supply / Vertical Return**
Medium Heat
Round Tube Plate Fin Coils

Dimensions (ft. in.) & Weight (lb.) ***

Unit Length: ..... **11' 9.5"**
Unit Width: ..... **7' 2.625"**
Unit Height: ..... **4' 1.375"**
*** Total Operating Weight: ..... **2414** lb

*** Weights and Dimensions are approximate. Weight does not include unit packaging. Approximate dimensions are provided primarily for shipping purposes. For exact dimensions and weights, refer to appropriate product data catalog.

Lines and Filters

Gas Line Size: **3/4**
Condensate Drain Line Size: **3/4**
Return Air Filter Type: ..... **Throwaway**
Return Air Filter Quantity: **6**
Return Air Filter Size: ..... **20 x 25 x 2**

Unit Configuration

Medium Static High Effy Motor/Vertical Supply, Return Air Flow
Al/Cu - Al/Cu
Base Electromechanical Controls
Enthalpy Economizer w/ Barometric Relief. Vertical and Horizontal Air Flow.
Standard Packaging

Warranty Information

1-Year parts(std.)
5-Year compressor parts(std.)
10-Year heat exchanger - Aluminized(std.)

No optional warranties were selected.

NOTE: Please see Warranty Catalog 500-089 for explanation of policies and ordering methods.

Ordering Information

Part Number	Description	Quantity
48TCED24ABA5-0F0A0	Rooftop Unit	1

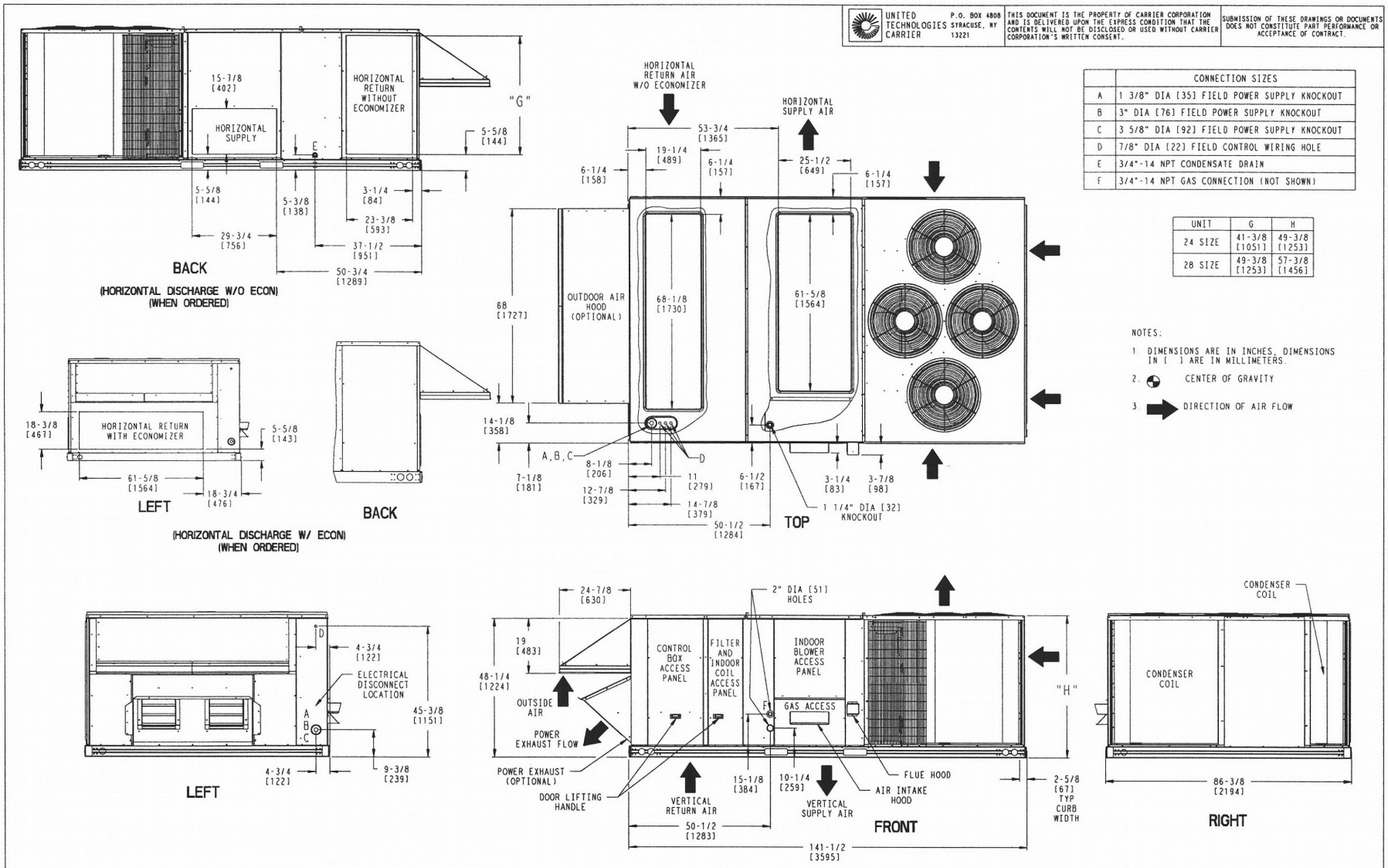

	CONNECTION SIZES
A	1 3/8" DIA [35] FIELD POWER SUPPLY KNOCKOUT
B	3" DIA [76] FIELD POWER SUPPLY KNOCKOUT
C	3 5/8" DIA [92] FIELD POWER SUPPLY KNOCKOUT
D	7/8" DIA [22] FIELD CONTROL WIRING HOLE
E	3/4"-14 NPT CONDENSATE DRAIN
F	3/4"-14 NPT GAS CONNECTION (NOT SHOWN)

UNIT	G	H
24 SIZE	41-3/8 [1051]	49-3/8 [1253]
28 SIZE	49-3/8 [1253]	57-3/8 [1456]

SHEET	DATE	SUPERCEDES			REV
1 OF 2	10/26/10	06/23/09	48TC 24-28 SINGLE ZONE ELECTRICAL COOLING WITH GAS HEAT	50HE501158	C

UNIT	OUTDOOR COIL TYPE	STD UNIT WEIGHT *		CORNER WEIGHT (A)		CORNER WEIGHT (B)		CORNER WEIGHT (C)		CORNER WEIGHT (D)		C.G.		
		LBS.	KG.	LBS.	KG.	LBS.	KG.	LBS.	KG.	LBS.	KG.	X	Y	Z
48TC24	MCHX	1989	904	383	174	540	245	623	283	442	201	46 1/8 [1172]	82 7/8 [2105]	16 1/2 [419]
48TC28	MCHX	2118	963	408	186	575	261	664	302	471	214	46 1/8 [1172]	82 7/8 [2105]	19 [483]
48TC24	RTPF	2072	942	558	254	548	249	479	217	487	221	40 5/32 [1020]	70 [1778]	16 1/2 [419]
48TC28	RTPF	2197	999	571	259	564	256	528	240	534	243	41 21/32 [1058]	70 1/4 [1784]	19 [483]

RTPF - ROUND TUBE, PLATE FIN (COPPER/ALUM)
MCHX - NOVATION (ALUM/ALUM)

* STANDARD UNIT WEIGHT IS WITH LOW GAS HEAT AND WITHOUT PACKAGING.
FOR OTHER OPTIONS AND ACCESSORIES, REFER TO THE PRODUCT DATA CATALOG.

UNITED TECHNOLOGIES CARRIER P.O. BOX 4808 SYRACUSE, NY 13221

THIS DOCUMENT IS THE PROPERTY OF CARRIER CORPORATION AND IS DELIVERED UPON THE EXPRESS CONDITION THAT THE CONTENTS WILL NOT BE DISCLOSED OR USED WITHOUT CARRIER CORPORATION'S WRITTEN CONSENT.

SUBMISSION OF THESE DRAWINGS OR DOCUMENTS DOES NOT CONSTITUTE PART PERFORMANCE OR ACCEPTANCE OF CONTRACT.

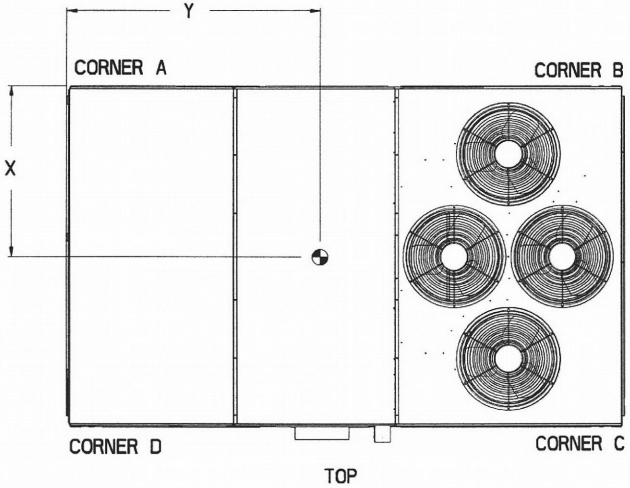

TOP

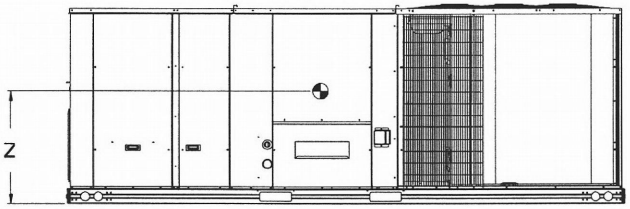

FRONT

SHEET	DATE	SUPERCEDES			REV
2 OF 2	10/26/10	06/23/09	48TC 24-28 SINGLE ZONE ELECTRICAL COOLING WITH GAS HEAT	50HE501158	C

Part Number:48TCED24ABA5-0F0A0

ARI EER:	9.80	
IEER:	10.8	

Base Unit Dimensions

Unit Length:	141.5	in
Unit Width:	86.6	in
Unit Height:	49.4	in

Operating Weight

Base Unit Weight:	2072	lb
Medium Heat:	90	lb
Medium Static High Effy Motor/Vertical Supply, Return Air Flow:	6	lb
Enthalpy Economizer w/ Barometric Relief. Vertical and Horizontal Air Flow.:	246	lb
Total Operating Weight:	2414	lb

Unit

Unit Voltage-Phase-Hertz:	230-3-60	
Air Discharge:	Vertical	
Fan Drive Type:	Belt	
Actual Airflow:	8000	CFM
Site Altitude:	39	ft

Cooling Performance

Condenser Entering Air DB:	90.0	F
Evaporator Entering Air DB:	76.7	F
Evaporator Entering Air WB:	64.2	F
Entering Air Enthalpy:	29.29	BTU/lb
Evaporator Leaving Air DB:	54.6	F
Evaporator Leaving Air WB:	53.6	F
Evaporator Leaving Air Enthalpy:	22.32	BTU/lb
Gross Cooling Capacity:	250.48	MBH
Gross Sensible Capacity:	190.70	MBH
Compressor Power Input:	18.47	kW
Coil Bypass Factor:	0.098	

Mixed Air

Outdoor Air Airflow:	420	CFM
Outdoor Air DB:	90.0	F
Outdoor Air WB:	67.0	F
Outdoor Air Htg. Temp.:	22.0	F
Return Air DB:	76.0	F
Return Air WB:	64.0	F
Return Air Htg. Temp.:	70.0	F

Heating Performance

Heating Airflow:	8000	CFM
Entering Air Temp:	67.5	F
Leaving Air Temp:	96.6	F
Gas Input Capacity:	248.0 / 310.0	MBH
Gas Heating Capacity:	251.00	MBH
Temperature Rise:	29.1	F
NOTE:	Second Stage	

Supply Fan

External Static Pressure:	0.50	in wg
Options / Accessories Static Pressure		
Economizer:	0.08	in wg
Total External Static:	0.58	in wg

Fan RPM: **865**
Fan Power: ..... **3.93** BHP
NOTE: ..... **Selected IFM RPM Range: 835 - 1021**

Electrical Data (Before July 30, 2012)

Minimum Voltage: **187**
Maximum Voltage: **253**
Compressor #1 RLA: **48.1**
Compressor #1 LRA: **245**
Compressor #2 RLA: **29.5**
Compressor #2 LRA: **195**
Outdoor Fan Motor Qty: **4**
Outdoor Fan FLA (ea): **1.5**
Indoor Fan Motor Type: ..... **High Eff. Medium**
Indoor Fan Motor FLA: **17.1**
Combustion Fan Motor FLA (ea): **0.52**
Power Supply MCA: **112.7**
Power Supply MOCP (Fuse or HACR): **150**
Min. Unit Disconnect FLA: **116**
Min. Unit Disconnect LRA: **536**
Electrical Convenience Outlet: ..... **None**

Electrical Data (July 30, 2012 and Beyond)

Indoor Fan Motor FLA: **17.1**
Power Supply MCA: **112.7**
Power Supply MOCP: **150**
Disconnect Size FLA: **116**
Disconnect Size LRA: **536**

July 30th and beyond units can be identified by serial number 3112XXXXXXXXX and higher

Control Panel SCCR: 5kA RMS at Rated Symmetrical Voltage

Acoustics

Sound Rating: ..... **87.0** db
Sound Power Levels, db re 10E-12 Watts

	Discharge	Inlet	Outdoor
63 Hz	92.7	92.9	95.6
125 Hz	85.8	74.8	87.5
250 Hz	78.9	69.1	84.2
500 Hz	78.9	62.0	84.2
1000 Hz	72.7	55.9	81.7
2000 Hz	71.2	52.1	77.9
4000 Hz	71.2	45.8	73.2
8000 Hz	62.5	33.7	66.3
A-Weighted	80.6	69.0	86.5

Advanced Acoustics

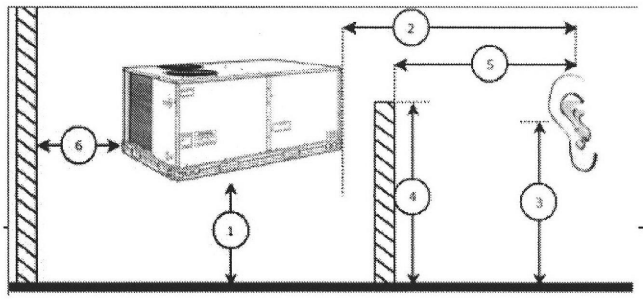

Advanced Accoustics Parameters

1. Unit height above ground: ..... **30.0** ft
2. Horizontal distance from unit to receiver: ..... **50.0** ft
3. Receiver height above ground: ..... **5.7** ft
4. Height of obstruction: ..... **0.0** ft
5. Horizontal distance from obstruction to receiver: ... **0.0** ft
6. Horizontal distance from unit to obstruction: ..... **0.0** ft

Detailed Acoustics Information

Octave Band Center Freq. Hz	63	125	250	500	1k	2k	4k	8k	Overall
A	95.6	87.5	84.2	84.2	81.7	77.9	73.2	66.3	96.9 Lw
B	69.4	71.4	75.6	81.0	81.7	79.1	74.2	65.2	86.5 LwA
C	63.2	55.1	51.8	51.8	49.3	45.5	40.8	33.9	64.5 Lp
D	37.0	39.0	43.2	48.6	49.3	46.7	41.8	32.8	54.1 LpA

Legend
A Sound Power Levels at Unit's Acoustic Center, Lw
B A-Weighted Sound Power Levels at Unit's Acoustic Center, LwA
C Sound Pressure Levels at Specific Distance from Unit, Lp
D A-Weighted Sound Pressure Levels at Specific Distance from Unit, LpA

Calculation methods used in this program are patterned after the ASHRAE Guide; other ASHRAE Publications and the AHRI Acoustical Standards. While a very significant effort has been made to insure the technical accuracy of this program, it is assumed that the user is knowledgeable in the art of system sound estimation and is aware of the tolerances involved in real world acoustical estimation. This program makes certain assumptions as to the dominant sound sources and sound paths which may not always be appropriate to the real system being estimated. Because of this, no assurances can be offered that this software will always generate an accurate sound prediction from user supplied input data. If in doubt about the estimation of expected sound levels in a space, an Acoustical Engineer or a person with sound prediction expertise should be consulted.

Performance Summary For rtu 1

Project: ~Untitled1
Prepared By:

09/18/2013
11:24AM

Fan Curve

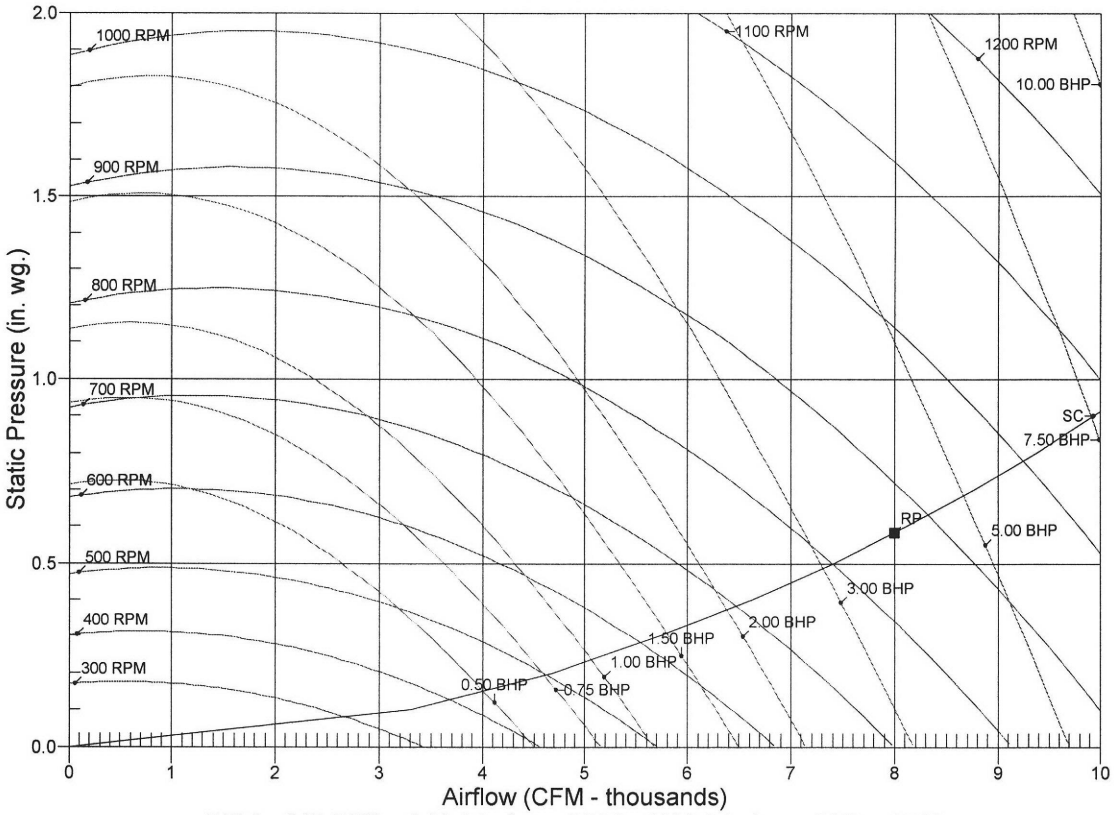

RPM = 865 BHP = 3.93 Maximum RPM = 1290 Maximum BHP = 15.00
SC - System Curve RP - Rated Point

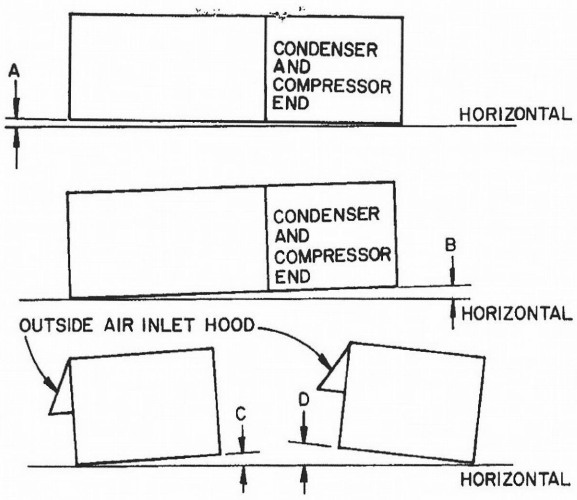

UNIT 579D	DIMENSIONS (degrees and inches)							
	A		B		C		D	
	deg	in.*	deg	in.*	deg	in.*	deg	in.*
240	0 75	1 9/16	1 00	2 9/16	0 50	1 1/16	1 00	1 3/8
300	0 60	1 5/8	0 87	2 3/8	0 50	1 1/16	1 00	1 3/8
360	0 50	1 11/16	0.75	2 1/2	0 50	1 1/16	1 00	1 3/8

*From edge of unit to horizontal

Fig. 2 — Maximum Unit Leveling Tolerances

Alternate Unit Support Methods — Where the preferred curb or slab mount cannot be used, support unit with sleepers on unit perimeter using unit curb support area. However, if sleepers cannot be used, support long sides of unit (dimension A, Fig. 4) by a minimum number of 4-in. x 4-in. pads equally spaced as follows: units 579D240, 300, 360 require 3 pads each side. Units may sag if supported by corners only.

Positioning — Unit condenser air inlets and outlets may be located in any compass direction since they are not affected by wind. Provide clearances around and above the unit for airflow, safety, and service access (Fig. 4). A minimum clearance of 4 ft must be maintained to all combustible surfaces.

Do not install unit in an indoor location. Do not locate unit air inlets near exhaust vents or other sources of contaminated air.

Although unit is weatherproof, guard against water from higher level runoff and overhangs.

Outdoor Air Limitation — Unit is equipped with an outdoor air damper or economizer which permits outdoor air to be mixed with return air. The mixture must remain above 35 F to prevent condensation of flue gases when furnace is at half-rate operation. There is no minimum mixture temperature during full-rate operation of furnace.

Table 1 — Physical Data

UNIT	240		300	360
OPERATING WEIGHT (lb)				
Base Unit	3300		4100	4900
Economizer	150		175	200
COMPRESSOR	Serviceable, Reciprocating Hermetic			
Quantity...Model	1 06E		2. .06DA	2. .06DA
Oil (3GS or BI) (pts)	14		10 (ea)	10 (ea)
REFRIGERANT CHARGE (R-22)				
System 1...System 2 (lb)	36 —		23 75 18 25	29 0 29 0
OUTDOOR AIR FANS	Direct Drive, Propeller			
Number...Hp	2. .1		2. .1	3. .1
Frame (NEMA)	56		56	56
Rpm	1050		1050	1050
INDOOR AIR FANS*	Fixed Speed, Centrifugal			
Unit Voltage	208/230-v	460-v	All	All
Motor Hp...Shaft Diameter (in) @ 1750 Rpm	7½ 1⅜	5 1⅛	7½ 1⅜	7½ 1⅛
Motor Frame Size	213T	184T	213T	215T
Motor Pulley Pitch Diameter (in.)	5 3. 5 6	6 5 . 6 0	6 5 . 5 6	6 5.. 5 6
Fan Pulley Pitch Diameter (in.)	8 0	10 6	10 6	10 6
Fan Speed (Rpm)	1159 1225	1073 991	1073.. 925	1073 925
Fan Shaft Diameter (in)	1 1/16		1 1/16	1 11/16
Maximum Allowable Fan Speed (Rpm)	1300		1300	1300
FURNACE, Exchangers . Elements (ea)	2 . 9		2. .11	2. .13
Input (Btuh x 1000)	450		575	662
Output Capacity (Btuh x 1000)	337 5		431 25	496
Temperature Rise (F)	35 to 65		35 to 65	35 to 65
Maximum External Static Pressure (in. wg)	2 0	1 5	1 5	1 5
Burner Orifice Diameter (in. . .drill no.)				
Natural	096 41		096 41	096 41
Propane	059 52		059 52	059 52
Pilot Orifice Diameter (in. . drill no)				
Natural	016 .78		016. .78	016. .78
Propane	010		010	010
HIGH-PRESSURE SWITCH				
Cutout (psig)	400 ±5			
Cut-in (psig)	300 ±5			
LOW-PRESSURE SWITCH				
Cutout (psig)	27 ±4			
Cut-in (psig)	67 ±7			
INDOOR AIR FILTERS (in.), Number	2		2	2
Standard; Quantity...Size (in.)	6 20x25		18 16x25	9 20x25
Throwaway	6 16x25			12 16x25
AIR INLET SCREENS				
Economizer; Quantity...Size (in.)	3 20x25		4 20x25	5 20x25

*Standard fan motor supplied with standard fan drive pulleys and belts Pulley A is installed in unit; pulley B is shipped with unit

24ACC6
Performance™ 16 Air Conditioner with Puron® Refrigerant
1–1/2 to 5 Tons

Carrier
turn to the experts

Product Data

Puron™ the environmentally sound refrigerant

Performance SERIES

Carrier's Air Conditioners with Puron® refrigerant provide a collection of features unmatched by any other family of equipment. The 24ACC has been designed utilizing Carrier's Puron refrigerant. The environmentally sound refrigerant allows you to make a responsible decision in the protection of the earth's ozone layer.

This product has been designed and manufactured to meet Energy Star® criteria for energy efficiency when matched with appropriate coil components. Refer to the combination ratings in the Product Data for system combinations that meet Energy Star® guidelines.

NOTE: Ratings contained in this document are subject to change at any time. Always refer to the AHRI directory (www.ahridirectory.org) for the most up-to-date ratings information.

INDUSTRY LEADING FEATURES / BENEFITS

Efficiency

- 14 - 16.5 SEER / 11.5- 13.5 EER
- Microtube Technology™ refrigeration system
- Indoor air quality accessories available

Sound

- Sound level as low as 72 dBA
- Compressor sound blanket standard

Comfort

- System supports Edge® Thermidistat™ or standard thermostat controls

Reliability

- Puron® refrigerant - environmentally sound, won't deplete the ozone layer and low lifetime servce cost.
- Scroll compressor
- Internal pressure relief valve
- Internal thermal overload
- Filter drier
- High and low pressure switches
- Balanced refrigeration system for maximum reliability

Durability

WeatherArmor™ protection package:

- Solid, durable sheet metal construction
- Louvered coil guard
- Baked-on, complete outer coverage, powder paint

Applications

- Long-line - up to 250 feet (76.20 m) total equivalent length, up to 200 feet (60.96 m) condenser above evaporator, or up to 80 ft. (24.38 m) evaporator above condenser (See Longline Guide for more information.)
- Low ambient (down to -20°F/-28.9°C)) with accessory kit

MODEL NUMBER NOMENCLATURE

1	2	3	4	5	6	7	8	9	10	11	12	13
N	N	A	A	A/N	N	N	N	A/N	A/N	A/N	N	N
2	**4**	**A**	**C**	**C**	**6**	**3**	**6**	**A**	**0**	**0**	**3**	0
Product Series		Product Family	Tier	Major Series	SEER	Cooling Capacity		Grille Variations	Open	Open	Voltage	Series
24=AC		A=RES AC	C=Performance	C=Puron	6=16 SEER			A = Standard	0=Not Defined	0=Not Defined	3=208/230–1	0 = Original Series

Puron™ the environmentally sound refrigerant

AHRI CERTIFIED™ www.ahridirectory.org

Use of the AHRI Certified TM Mark indicates a manufacturer's participation in the program For verification of certification for individual products, go to www.ahridirectory.org.

Certified System ™

ISO 9001
QMI-SAI Global

c UL US

ENERGY STAR

This product has been designed and manufactured to meet Energy Star® criteria for energy efficiency when matched with appropriate coil components. However, proper refrigerant charge and proper air flow are critical to achieve rated capacity and efficiency. Installation of this product should follow all manufacturing refrigerant charging and air flow instructions. **Failure to confirm proper charge and air flow may reduce energy efficiency and shorten equipment life.**

24ACC6

STANDARD FEATURES

Feature	18	24	30	36	42	48	60
Puron Refrigerant	X	X	X	X	X	X	X
Maximum SEER *	16.0	16.0	16.5	16.5	16.0	16.0	16.0
Scroll Compressor	X	X	X	X	X	X	X
Field Installed Filter Drier	X	X	X	X	X	X	X
Front Seating Service Valves	X	X	X	X	X	X	X
Internal Pressure Relief Valve	X	X	X	X	X	X	X
Internal Thermal Overload	X	X	X	X	X	X	X
Long Line capability	X	X	X	X	X	X	X
Low Ambient capability with Kit	X	X	X	X	X	X	X
High Pressure Switch	X	X	X	X	X	X	X
Low Pressure Switch	X	X	X	X	X	X	X
Compressor Sound Blanket	X	X	X	X	X	X	X
Louvered Coil Guard	X	X	X	X	X	X	X

* With approved combinations
X = Standard

PHYSICAL DATA

UNIT SIZE – VOLTAGE, SERIES	18–30	24–30	30–30	36–30	42–30	48–30	60–30
Operating Weight lb (kg)	136 (61.7)	163 (73.9)	167 (75.7)	180 (81.6)	234 (106.1)	248 (112.5)	337 (152.9)
Shipping Weight lb (kg)	163 (73.9)	198 (89.8)	204 (92.5)	219 (99.3)	281 (127.5)	291 (132.0)	372 (188.7)
Compressor Type			Scroll				
REFRIGERANT			Puron□ (R–410A)				
Control			TXV (Puron□ Hard Shutoff)				
Charge lb (kg)	4.60 (2.09)	6.00 (2.72)	6.81 (3.09)	7.00 (3.18)	8.62 (3.91)	10.50 (4.76)	14.50 (6.58)
COND FAN			Propeller Type, Direct Drive				
Air Discharge			Vertical				
Air Qty (CFM)	1881	2614	2614	3223	3810	4046	4046
Motor HP	1/12	1/10	1/10	1/12	1/5	1/4	1/4
Motor RPM	1100	800	800	800	800	800	800
COND COIL							
Face Area (Sq ft)	11.50	15.10	17.20	17.60	25.15	20.10	30.15
Fins per In.	25	25	25	25	25	20	20
Rows	1	1	1	1	1	2	2
Circuits	3	4	4	4	6	7	8
VALVE CONNECT. (In. ID)							
Vapor	3/4	3/4	3/4	7/8	7/8	7/8	7/8
Liquid	3/8	3/8	3/8	3/8	3/8	3/8	3/8
REFRIGERANT TUBES (In. OD)							
Rated Vapor*		3/4		7/8			1 1/8
Max Liquid Line			3/8				

* Units are rated with 25 ft (7.6 m) of lineset length. See Vapor Line Sizing and Cooling Capacity Loss table when using other sizes and lengths of lineset.
Note: See unit Installation Instruction for proper installation.

† See *Liquid Line Sizing For Cooling Only Systems with Puron Refrigerant* tables.

ELECTRICAL DATA

UNIT SIZE	V/PH	OPER VOLTS*		COMPR		FAN	MCA	MIN WIRE SIZE† 60° C	MIN WIRE SIZE† 75° C	MAX LENGTH ft. (m)‡ 60° C	MAX LENGTH ft. (m)‡ 75° C	MAX FUSE** or CKT BRK AMPS
		MAX	MIN	LRA	RLA	FLA						
18–30				48.0	9.0	0.50	11.8	14	14	67 (20.4)	64 (19.5)	20
24–30				58.3	13.5	0.70	17.6	14	14	46 (14.0)	43 (13..1)	25
30–30				64.0	12.8	0.70	16.7	14	14	44 (13.4)	41 (12.5)	25
36–30	208/230/1–60	253	197	77.0	14.1	0.50	18.1	12	12	57 (17.4)	54 (16.5)	30
42–30				112.0	17.9	1.20	23.6	10	10	85 (25.9)	81 (24.7)	40
48–30				109.0	19.9	1.20	26.1	10	10	70 (21.3)	67 (20.4)	40
60–30				135.0	21.4	1.20	28.0	8	10	91 (27.7)	56 (17.1)	40

* Permissible limits of the voltage range at which the unit will operate satisfactorily

† If wire is applied at ambient greater than 30°C, consult table 310–16 of the NEC (NFPA 70). The ampacity of non–metallic–sheathed cable (NM), trade name ROMEX, shall be that of 60°C conditions, per the NEC (NFPA 70) Article 336–26. If other than uncoated (no–plated), 60 or 75°C insulation, copper wire (solid wire for 10 AWG or smaller, stranded wire for larger than 10 AWG) is used, consult applicable tables of the NEC (NFPA 70).

‡ Length shown is as measured one way along wire path between unit and service panel for voltage drop not to exceed 2%.

** Time–Delay fuse.

FLA – Full Load Amps
LRA – Locked Rotor Amps
MCA – Minimum Circuit Amps
RLA – Rated Load Amps
NOTE: Control circuit is 24–V on all units and requires external power source. Copper wire must be used from service disconnect to unit. All motors/compressors contain internal overload protection.

Complies with 2010 requirements of ASHRAE Standards 90.1

24ACC6

A-WEIGHTED SOUND POWER LEVEL (dBA)

Unit Size – Voltage, Series	Standard Rating (dBA)	TYPICAL OCTAVE BAND SPECTRUM (dBA without tone adjustment)						
		125	250	500	1000	2000	4000	8000
18–30	73	49.5	58.5	64.5	69.0	63.0	59.5	52.4
24–30	74	54.5	62.0	67.0	71.5	66.0	62.0	53.0
30–30	74	56.0	62.5	66.0	68.5	64.5	61.0	53.5
36–30	72	52.0	61.0	64.0	66.0	61.0	58.5	51.5
42–30	74	56.5	61.5	65.0	66.5	63.5	61.0	56.5
48–30	73	58.0	61.0	65.0	66.0	62.0	58.0	51.0
60–30	74	56.5	62.5	66.5	68.0	63.0	59.5	51.5

NOTE: Tested in accordance with AHRI Standard 270–08 (not listed in AHRI).

CHARGING SUBCOOLING (TXV-TYPE EXPANSION DEVICE)

UNIT SIZE–VOLTAGE, SERIES	REQUIRED SUBCOOLING °F (°C)
18–30	10 (5.6)
24–30	10 (5.6)
30–30	10 (5.6)
36–30	10 (5.6)
42–30	9 (5.0)
48–30	10 (5.6)
60–30	9 (5.0)

DIMENSIONS - ENGLISH

UNIT	SERIES	ELECTRICAL CHARACTERISTICS				A	B	C	D	E	F	G	K	L	M	N	P	OPERATING WEIGHT (lbs)	SHIPPING WEIGHT (lbs)	SHIPPING DIMENSIONS (L x W x H)
24ACC618	0	X	0	0	0	25 3/4"	28 11/16"	3 3/4"	3/4"	4 7/16"	21 1/4"	7 13/16"	2 13/16"	1/2"	13 1/4"	13 3/4"	12 3/4"	136	163	26 7/8" X 30 1/16" X 32 9/16"
24ACC624	0	X	0	0	0	31 3/16"	28 5/16"	3 3/4"	3/4"	6 9/16"	24 11/16"	9 1/8"	2 13/16"	1/2"	15 5/8"	15 1/2"	14"	163	198	32 3/8" X 35 1/2" X 32 9/16"
24ACC630	0	X	0	0	0	31 3/16"	32 5/16"	3 3/4"	3/4"	6 9/16"	24 11/16"	9 1/8"	2 13/16"	1/2"	16 1/2"	15"	14 3/4"	167	204	32 3/8" X 35 1/2" X 35 15/16"
24ACC636	0	X	0	0	0	35"	28 5/16"	3 7/8"	7/8"	6 9/16"	28 7/16"	9 1/8"	2 15/16"	5/8"	18 1/4"	16 7/8"	14"	180	219	36 1/8" X 39 5/16" X 32 9/16"
24ACC642	0	X	0	0	0	35"	39 1/8"	3 7/8"	7/8"	6 9/16"	28 7/16"	9 1/8"	2 15/16"	5/8"	18"	16"	17 1/2"	234	281	36 1/8" X 39 5/16" X 42 3/4"
24ACC648	0	X	0	0	0	35"	32 5/16"	3 7/8"	7/8"	6 9/16"	28 7/16"	9 1/8"	2 15/16"	5/8"	17"	17 1/2"	14"	248	291	36 1/8" X 39 5/16" X 35 15/16"
24ACC660	0	X	0	0	0	35"	45 15/16"	3 7/8"	7/8"	6 9/16"	28 7/16"	9 1/8"	2 15/16"	5/8"	17 7/8"	18 5/8"	20 1/4"	337	372	36 1/8" X 39 5/16" X 49 9/16"
		208-230-1-60	230-1-60	208/230-3-60	460-3-60															

X = YES
0 = NO

NOTES:

1. ALLOW 30" CLEARANCE TO SERVICE SIDE OF UNIT, 48" ABOVE UNIT, 6" ON ONE SIDE, 12" ON REMAINING SIDE, AND 24" BETWEEN UNITS FOR PROPER AIRFLOW.
2. MINIMUM OUTDOOR OPERATING AMBIENT IN COOLING MODE IS 55°F, MAX. 125°F.
3. SERIES DESIGNATION IS THE 13TH POSITION OF THE UNIT MODEL NUMBER.
4. CENTER OF GRAVITY ⊕.
5. ALL DIMENSIONS ARE IN "INCHES" UNLESS NOTED.

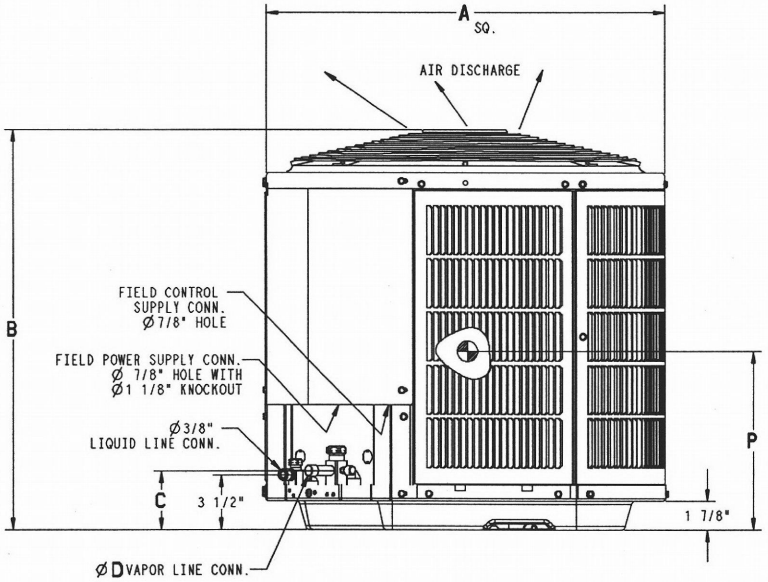

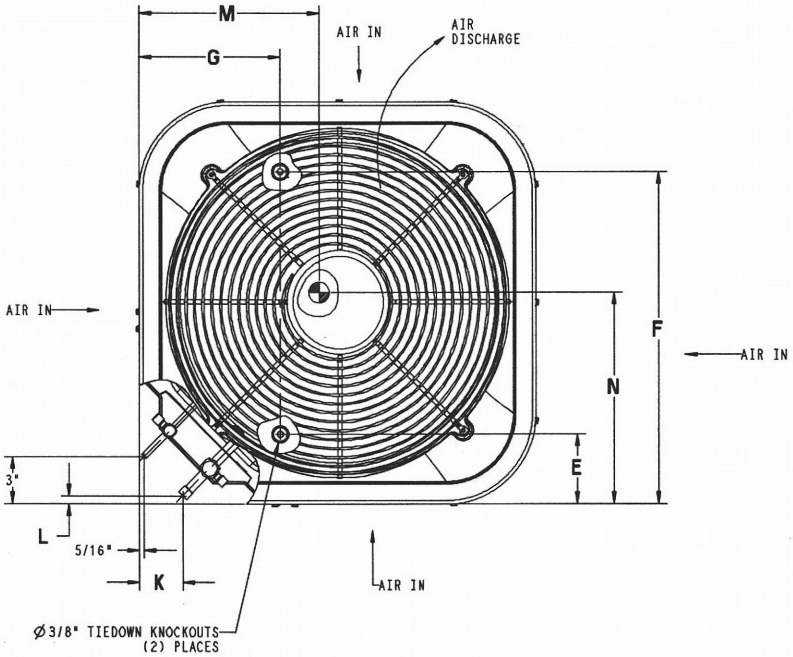

UNIT SIZE	MINIMUM MOUNTING PAD DIMENSIONS
18	26" X 26"
24,30	31 1/2" X 31 1/2"
36 THRU 60	35" X 35"

AIREFCO inc.

N/W Distributors
Heating and Cooling
Products

Carrier®

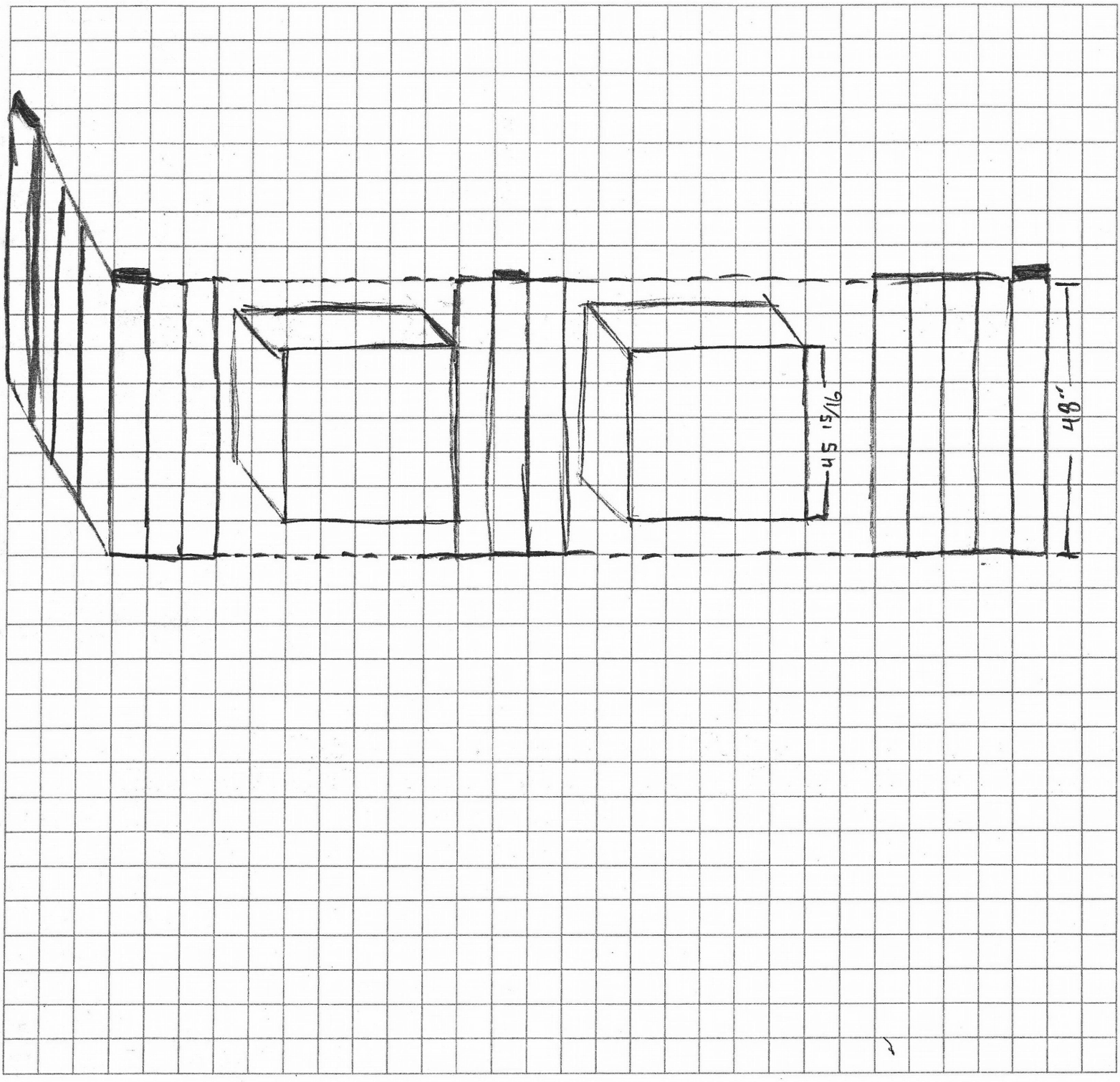

TUALATIN
18755 S.W. TETON
TUALATIN, OR 97062
(503) 692-3210
FAX (503) 692-9868

FIFE
3985 70th AVE. EAST A-1
FIFE, WA 98424
(253) 886-5350 1-888-247-3326
FAX (253) 886-5353

SPOKANE
730 E. FIRST AVENUE
SPOKANE, WA 99202
(509) 536-1811 1-800-541-6560
FAX (509) 536-4009