TESNER STRUCTURAL ENGINEERS
1534 Southeast 25th Avenue Portland, OR 97214 Phone 503-239-9119 Fax 503-239-9122

STRUCTURAL CALCULATIONS

FOR

PIOLI RESIDENCE
ADDITION AND REMODEL

2036 S.E. LINCOLN STREET
PORTLAND, OREGON

STRUCTURAL
REGISTERED PROFESSIONAL ENGINEER
16310
OREGON
DEC. 1, 1992
JOHN ANTHONY TESNER JR

EXPIRES: 6/30/2014

City of Portland
REVIEWED FOR CODE COMPLIANCE
SEP 12 2013
Permit Number

Project: PIOLI RESIDENCE
2036 S.E. LINCOLN STREET
Client: MSA DESIGN

Proj. No.:
By: JAT
Date: AUG. 2013
Sheet No.: COVER

TESNER STRUCTURAL ENGINEERS

1534 Southeast 25th Avenue Portland, OR 97214 Phone 503-239-9119 Fax 503-239-9122

(A) NEW HEADER

ESTIMATED LOADS FROM EXISTING UPPER FLOOR AND ROOF (DORMERS DO NOT SIGNIFICANTLY AFFECT HEADERS A & B)

UPPER FLOOR SPAN TO SOUTH MAIN EXTERIOR WALL IS APPROX. 15'

OVERALL HOUSE WIDTH (PERPENDICULAR TO BEAM) IS APPROX. 30'

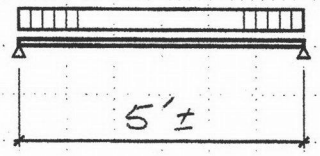

NOTE: UPPER STORY PONY WALLS ARE AT ABOUT 1/4 POINTS OF 30' DIMENSION - FOR MAIN ROOF PITCH OF 9:12, PONY WALLS ARE APPROX. $\left(\frac{9}{12}\right)\left(\frac{30}{4}\right) = 5'\text{-}7\frac{1}{2}''$ (REASONABLE ASSUMPTION)

$$w_{DL} = \left(\frac{9}{2}\right)(15) + \left(\frac{22.5}{2}\right)(15) \times \left(\frac{7.5}{15}\right) + \left(\frac{15}{2}\right)(12) + \left(\frac{9}{2}\right)(5) + \left(\frac{7.5}{2}\right)(15) = 320 \text{ PLF}$$

$$w_{LL} = \left(\frac{9}{2}\right)(25) + \left(\frac{22.5}{2}\right)(25) \times \left(\frac{7.5}{15}\right) + \left(\frac{15}{2}\right)(20) + (7.5)(20)\left(\frac{11.25}{15}\right) + \left(\frac{7.5}{2}\right)(25) = 610 \text{ PLF}$$

4x8 MIN.

(B) NEW HEADER

SEE (A) FOR LOADS

$w_{DL} = 320$ PLF

$w_{LL} = 610$ PLF

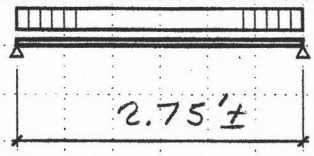

(2) 2x6 MIN.

(C) NEW HEADERS

CONSIDER WORST CASE LOADS (APPLY TO SOUTH WALL WITH SHORTER SPAN - CONSERVATIVE)

$$w_{DL} = (15)(10.375)\left(\frac{5.1875}{8.92}\right) + \left(\frac{8.92}{2}\right)(5) = 115 \text{ PLF}$$

$$w_{LL} = (25)(10.375)\left(\frac{5.1875}{8.92}\right) = 150 \text{ PLF}$$

ABOVE LOADS CONSIDER 14" ± OVERHANG

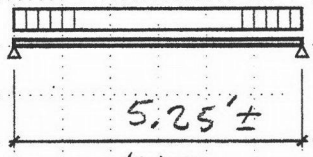

MAX.

(2) 2x6 MIN.

(C1) LONG SPAN HEADER

CONSIDER ABOVE LOADS ACTING ON SOUTH WALL WINDOW HEADER WITH 8'-6" ± ROUGH OPENING WIDTH (ADD 3" TO ℄ OF BEARING STUDS FOR STRUCTURAL SPAN) -

$\Delta_{TOTAL} = 0.2'' = \frac{L}{525}$ OK

4 x 8 MIN.

Project: PIOLI RESIDENCE
2036 S.E. LINCOLN STREET
Client: MSA DESIGN

Proj. No.: _____
By: JAT
Date: AUG. 2013 Sheet No.: 1

TESNER STRUCTURAL ENGINEERS

1534 Southeast 25th Avenue Portland, OR 97214 Phone 503-239-9119 Fax 503-239-9122

(D) FLOOR JOISTS

$w_{DL} = (\frac{16}{12})(12) = 16 PLF$

$w_{LL} = (\frac{16}{12})(40) = 53 PLF$

SPAN TABLES IN BUILDING CODE LIST 9'-9" ALLOWABLE SPAN FOR 2x6 D.F. NO. 2 @ 16" O.C.

$\Delta_{TOTAL} = 0.306" = \frac{L}{353}$

($\frac{L}{459}$ FOR LIVE LOAD) OK

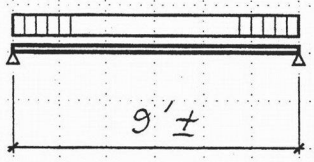

2x6 (MIN.) @ 16" O.C.

(USE 2x8)

(E) RAFTERS

$w_{DL} = (2)(15) = 30 PLF$

$w_{LL} = (2)(25) = 50 PLF$

$\Delta_{LL} = 0.22" = \frac{L}{491}$ OK

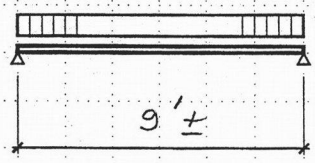

2x6 @ 24" O.C.

( )

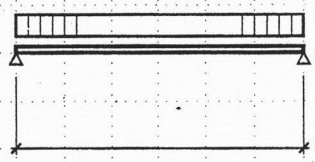

Project: PIOLI RESIDENCE
2036 S.E. LINCOLN STREET
Client: MSA DESIGN

Proj. No.: ____
By: JAT
Date: AUG. 2013
Sheet No.: 2

Tesner Structural Engineers
1534 S.E. 25th Avenue
Portland, Oregon 97214

Title : Pioli Residence **Job #**
Dsgnr: JAT **Date:**
Description : Addition and Remodel

Scope :

Rev: 580000
User: KW-0605936, Ver 5.8.0, 1-Dec-2003
(c)1983-2003 ENERCALC Engineering Software

Multi-Span Timber Beam

Description Headers

General Information

Code Ref: 2001 NDS, 2003 IBC, 2003 NFPA 5000. Base allowables are user defined

Douglas Fir - Larch, No.2		Fb : Basic Allow	900.0 psi	Elastic Modulus	1,600.0 ksi
All Spans Considered as Individual Beams		Fv : Basic Allow	180.0 psi	Load Duration Factor	1.150

Timber Member Information

Description		A	B	C	C1
Span	ft	5.00	2.75	5.25	8.75
Timber Section		4x8	2-2x6	2-2x6	4x8
Beam Width	in	3.500	3.000	3.000	3.500
Beam Depth	in	7.250	5.500	5.500	7.250
End Fixity		Pin - Pin	Pin - Pin	Pin - Pin	Pin - Pin
Le: Unbraced Length	ft	0.00	0.00	0.00	0.00
Member Type		Sawn	Sawn	Sawn	Sawn

Loads

Live Load Used This Span ?		**Yes**	**Yes**	**Yes**	**Yes**
Dead Load	#/ft	320.00	320.00	115.00	115.00
Live Load	#/ft	610.00	610.00	150.00	150.00

Results

Mmax @ Cntr	in-k	34.9	10.5	11.0	30.4
@ X =	ft	2.50	1.37	2.62	4.37
Max @ Left End	in-k	0.0	0.0	0.0	0.0
Max @ Right End	in-k	0.0	0.0	0.0	0.0
fb : Actual	psi	1,137.4	697.5	724.4	992.6
Fb : Allowable	psi	1,345.5	1,345.5	1,345.5	1,345.5
		Bending OK	**Bending OK**	**Bending OK**	**Bending OK**
Shear @ Left	k	2.32	1.28	0.70	1.16
Shear @ Right	k	2.32	1.28	0.70	1.16
fv : Actual	psi	104.5	77.5	52.3	59.4
Fv : Allowable	psi	207.0	207.0	207.0	207.0
		Shear OK	**Shear OK**	**Shear OK**	**Shear OK**

Reactions & Deflection

DL @ Left	k	0.80	0.44	0.30	0.50
LL @ Left	k	1.52	0.84	0.39	0.66
Total @ Left	k	**2.32**	**1.28**	**0.70**	**1.16**
DL @ Right	k	0.80	0.44	0.30	0.50
LL @ Right	k	1.52	0.84	0.39	0.66
Total @ Right	k	**2.32**	**1.28**	**0.70**	**1.16**
Max. Deflection	in	-0.074	-0.018	-0.068	-0.197
@ X =	ft	2.50	1.37	2.62	4.37

Query Values

Location	ft	0.00	0.00	0.00	0.00
Moment	in-k	0.0	0.0	0.0	0.0
Shear	k	2.3	1.3	0.7	1.2
Deflection	in	0.0000	0.0000	0.0000	0.0000

Tesner Structural Engineers
1534 S.E. 25th Avenue
Portland, Oregon 97214

Title : Pioli Residence **Job #**
Dsgnr: JAT **Date:**
Description : Addition and Remodel

Scope :

Rev: 580000
User: KW-0605936, Ver 5.8.0, 1-Dec-2003
(c)1983-2003 ENERCALC Engineering Software

Multi-Span Timber Beam

Description Floor Joists

General Information

Code Ref: 2001 NDS, 2003 IBC, 2003 NFPA 5000. Base allowables are user defined

Douglas Fir - Larch, No.2	Fb : Basic Allow	900.0 psi	Elastic Modulus	1,600.0 ksi
All Spans Considered as Individual Beams	Fv : Basic Allow	180.0 psi	Load Duration Factor	1.000

Note: Repetitive Member Stress Increase of 1.15 being used for all members under 4" wide

Timber Member Information

Description		D	D
Span	ft	9.00	9.00
Timber Section		2x6	2x8
Beam Width	in	1.500	1.500
Beam Depth	in	5.500	7.250
End Fixity		Pin - Pin	Pin - Pin
Le: Unbraced Length	ft	0.00	0.00
Member Type		Sawn	Sawn

Loads

Live Load Used This Span ?		Yes	Yes
Dead Load	#/ft	16.00	16.00
Live Load	#/ft	53.00	53.00

Results

Mmax @ Cntr	in-k	8.4	8.4
@ X =	ft	4.50	4.50
Max @ Left End	in-k	0.0	0.0
Max @ Right End	in-k	0.0	0.0
fb : Actual	psi	1,108.6	638.0
Fb : Allowable	psi	1,345.5	1,242.0
		Bending OK	**Bending OK**
Shear @ Left	k	0.31	0.31
Shear @ Right	k	0.31	0.31
fv : Actual	psi	51.2	37.1
Fv : Allowable	psi	180.0	180.0
		Shear OK	**Shear OK**

Reactions & Deflection

DL @ Left	k	0.07	0.07
LL @ Left	k	0.24	0.24
Total @ Left	k	**0.31**	**0.31**
DL @ Right	k	0.07	0.07
LL @ Right	k	0.24	0.24
Total @ Right	k	**0.31**	**0.31**
Max. Deflection	in	-0.306	-0.134
@ X =	ft	4.50	4.50

Query Values

Location	ft	0.00	0.00
Moment	in-k	0.0	0.0
Shear	k	0.3	0.3
Deflection	in	0.0000	0.0000

Tesner Structural Engineers
1534 S.E. 25th Avenue
Portland, Oregon 97214

Title : Pioli Residence
Dsgnr: JAT
Description : Addition and Remodel
Scope :

Job #
Date:

Rev: 580000
User: KW-0605936, Ver 5.8.0, 1-Dec-2003
(c)1983-2003 ENERCALC Engineering Software

Multi-Span Timber Beam

Description Rafters

General Information

Code Ref: 2001 NDS, 2003 IBC, 2003 NFPA 5000. Base allowables are user defined

Douglas Fir - Larch, No.2	Fb : Basic Allow	900.0 psi	Elastic Modulus	1,600.0 ksi
All Spans Considered as Individual Beams	Fv : Basic Allow	180.0 psi	Load Duration Factor	1.150

Note: Repetitive Member Stress Increase of 1.15 being used for all members under 4" wide

Timber Member Information

Description		E	E - LL
Span	ft	9.00	9.00
Timber Section		2x6	2x6
Beam Width	in	1.500	1.500
Beam Depth	in	5.500	5.500
End Fixity		Pin - Pin	Pin - Pin
Le: Unbraced Length	ft	0.00	0.00
Member Type		Sawn	Sawn

Loads

Live Load Used This Span ?		Yes	Yes
Dead Load	#/ft	30.00	
Live Load	#/ft	50.00	50.00

Results

Mmax @ Cntr	in-k	9.7	6.1
@ X =	ft	4.50	4.50
Max @ Left End	in-k	0.0	0.0
Max @ Right End	in-k	0.0	0.0
fb : Actual	psi	1,285.3	803.3
Fb : Allowable	psi	1,547.3	1,547.3
		Bending OK	**Bending OK**
Shear @ Left	k	0.36	0.22
Shear @ Right	k	0.36	0.22
fv : Actual	psi	59.3	37.1
Fv : Allowable	psi	207.0	207.0
		Shear OK	**Shear OK**

Reactions & Deflection

DL @ Left	k	0.13	0.00
LL @ Left	k	0.22	0.22
Total @ Left	k	**0.36**	**0.22**
DL @ Right	k	0.13	0.00
LL @ Right	k	0.22	0.22
Total @ Right	k	**0.36**	**0.22**
Max. Deflection	in	-0.355	-0.222
@ X =	ft	4.50	4.50

Query Values

Location	ft	0.00	0.00
Moment	in-k	0.0	0.0
Shear	k	0.4	0.2
Deflection	in	0.0000	0.0000

TESNER STRUCTURAL ENGINEERS
1534 Southeast 25th Avenue Portland, OR 97214 Phone 503-239-9119 Fax 503-239-9122

LATERAL DESIGN

FOR ADDITION:

IN EAST-WEST LOAD DIRECTION, SPECIFY ALTERNATE BRACED PANELS WITH HOLDOWNS TYPICAL AT BOTH ENDS OF 14'-4" LONG WALL LINE (OK BY INSPECTION).

IN NORTH-SOUTH DIRECTION, EXISTING HOUSE PROJECTED AREA ENVELOPES ADDITION - NO INCREASE IN DESIGN WIND LOAD (GOVERNS OVER SEISMIC). GENEROUS LENGTHS OF EXISTING EXTERIOR WALL PANELS EXIST IN FIRST STORY ON EAST & WEST SIDES OF HOUSE (APPROX. 23' ON EAST SIDE, 21.5' ON WEST SIDE). OK BY INSPECTION.

AT EXISTING SOUTH EXTERIOR WALL LINE (INTERFACE WITH ADDITION), UPGRADE PORTIONS WHERE MINOR OPENING ADJUSTMENTS OCCUR

CONT'D

USE ASCE 7-05, METHOD 1 (SIMPLIFIED PROCEDURE)

$V = 95$ MPH (3-SECOND GUST)

EXPOSURE B

MEAN ROOF HEIGHT: $h \approx 20'$

$p_s = \lambda K_{zt} I p_{s30}$

$\lambda = 1.0$

$K_{zt} = 1.0$

$I = 1.0$

$p_s = p_{s30}$

ZONE	$p_s = p_{s30}$
A	16.1
B	11.05
C	12.85
D	8.85

CONSIDER MAIN ROOF PITCH OF APPROX. 9:12 ($\theta = 36.9°$)

USE PRESSURES FOR ROOF ANGLE OF 30° TO 45°

PLAN DIMENSIONS (INCLUDING ADDITION) ARE $34' \pm \times 39' \pm$

$a = (0.10)(34) = 3.4'$

$2a = 6.8'$

CONT'D

CONSERVATIVELY APPLY WALL ZONE A (16 PSF) AND WALL ZONE C (13 PSF) TO ALL AREAS INCLUDING ROOF

WIND LOAD FROM ADDITION -

$V_1 = \left(\frac{11.375}{2}\right)\left(\frac{9}{2}\right)(16)$

$= 409\#$

CONSIDERS WORST CASE PRESSURE (A) AND MAX. HEIGHT FROM FLOOR TO ROOF (CONSV.)

PROJECTED AREA OF MAIN HOUSE (NOT INCLUDING DORMERS):

$A \approx \left(\frac{1}{2}\right)(30)(11.67) + (30)\left(0.5 + \frac{9}{2}\right)$

$= 175 + 150$

$= 325\ FT^2$

$V_2 = \left(\frac{1}{2}\right)(325)(13) + (16-13)(6.8)\left(0.5 + \frac{9}{2}\right) \times \left(\frac{26.6}{30}\right) + (16-13)(6.8) \times \left(\frac{1}{2}\right)(5.3)\left(\frac{25.5}{30}\right)$

$= 2112 + 90 + 46$

$= 2248\#$

TESNER STRUCTURAL ENGINEERS
1534 Southeast 25th Avenue Portland, OR 97214 Phone 503-239-9119 Fax 503-239-9122

LATERAL DESIGN

APPLY 100% OF WIND LOAD ACTING ON SOUTH DORMER USING ZONE A PRESSURE AND IGNORE CONTRIBUTION FROM NORTH DORMER

$A \approx (\frac{1}{2})(19)(5)$
$= 47.5 \text{ FT}^2$

$V_3 = (47.5)(16)$
$= 760 \#$

$\Sigma V = 409 + 2248 + 760$
$= 3417 \#$

$L = 3 + 2.58 = 5.58'$
(UPGRADED WALL LENGTH)

CONSIDER EXISTING 13' (MIN.) LENGTH OF EXTERIOR WALL CONSTRUCTION RESISTS 100 PLF

$v = \frac{3417 - (13)(100)}{5.58}$
$= 379 \text{ PLF}$

USE 15/32" APA RATED WOOD STRUCTURAL PANELS ON ONE FACE
10d @ 4" O.C. EDGES
10d @ 12" O.C. FIELD

ADD (2) SIMPSON UFP10-SDS3 (MUD-SILL TO BSMT. WALL)

CONT'D

HOLDOWNS:

$T = (8.33)(379) = 3157 \#$

DEAD LOAD ON WALL LINE:

$w_{DL} = 320^* + (8.33)(10)$
$= 403 \text{ PLF}$ SAY 400

* SEE HEADER (A)

CONSIDER 1.5' TRIBUTARY LENGTH OF LOAD AT EACH WALL END (CONSV.)

USE FACTORED LOADS FOR ANCHOR BOLT DESIGN -

$T_u = (1.6)(3157) - (0.9)$
$\times (1.5)(400)$
$= 4511 \#$

ASSUME $f'_c = 2500$ PSI, CRACKED CONCRETE AND NO SUPPLEMENTAL REINFORCEMENT (WORST CASE)

TYPICAL STRAIGHT STRAP WITH (3) 5/8" DIA. HILTI KWIK BOLT TZ (4" EMBED) OK PER ATTACHED OUTPUT

CHECK TENSILE STRESS AT NET SECTION THROUGH BOLT HOLES -

$f_t = \frac{3157}{(3/16)(3 - 3/4)} = 7483 \text{ PSI}$
OK

CONT'D

FOR NAILS TO DOUBLE STUD, COMPARE WITH SIMPSON MSTC 28 WITH (18) 16d SINKERS (EACH END OF MSTC 28)

$T_{ALLOW} = 3455 \#$
$> 3157 \#$

NAILS OK

AT CORNER STRAP CONSIDER 6 1/2" ECCENTRICITY BETWEEN BOLT GROUP AND NAIL GROUP

(4) 5/8" DIA. HILTI KWIK BOLT TZ (4" EMBED.) OK PER ATTACHED OUTPUT FOR ECCENTRIC LOADING

CHECK BENDING IN STRAP -

$M = (3157)(6.5)$
$= 20,520 \text{ "}\#$

$S = \frac{(3/16)(7)^2}{6} = 1.53 \text{ IN}^3$

$f_b = \frac{20520}{1.53} = 13,412 \text{ PSI}$
OK

Company:	Tesner Structural Engineers	Page:	1
Specifier:	John Tesner	Project:	Pioli Residence
Address:	1534 S.E. 25th Avenue	Sub-Project I Pos. No.:	Holdown strap
Phone I Fax:	(503) 239-9119 |	Date:	9/9/2013
E-Mail:			

Specifier's comments:

1 Input data

Anchor type and diameter:	**Kwik Bolt TZ - SS 304 5/8 (4)**
Effective embedment depth:	h_{ef} = 4.000 in., h_{nom} = 4.438 in.
Material:	AISI 304
Evaluation Service Report:	ESR-1917
Issued I Valid:	5/1/2013 | 5/1/2015
Proof:	design method ACI 318 / AC193
Stand-off installation:	e_b = 0.000 in. (no stand-off); t = 0.187 in.
Anchor plate:	l_x x l_y x t = 19.000 in. x 3.000 in. x 0.187 in.; (Recommended plate thickness: not calculated)
Profile:	S shape (AISC); (L x W x T x FT) = 3.000 in. x 2.330 in. x 0.170 in. x 0.260 in.
Base material:	cracked concrete, 2500, f_c' = 2500 psi; h = 6.000 in.
Reinforcement:	tension: condition B, shear: condition B; no supplemental splitting reinforcement present edge reinforcement: none or < No. 4 bar
Seismic loads (cat. C, D, E, or F)	no

Geometry [in.] & Loading [lb, in.lb]

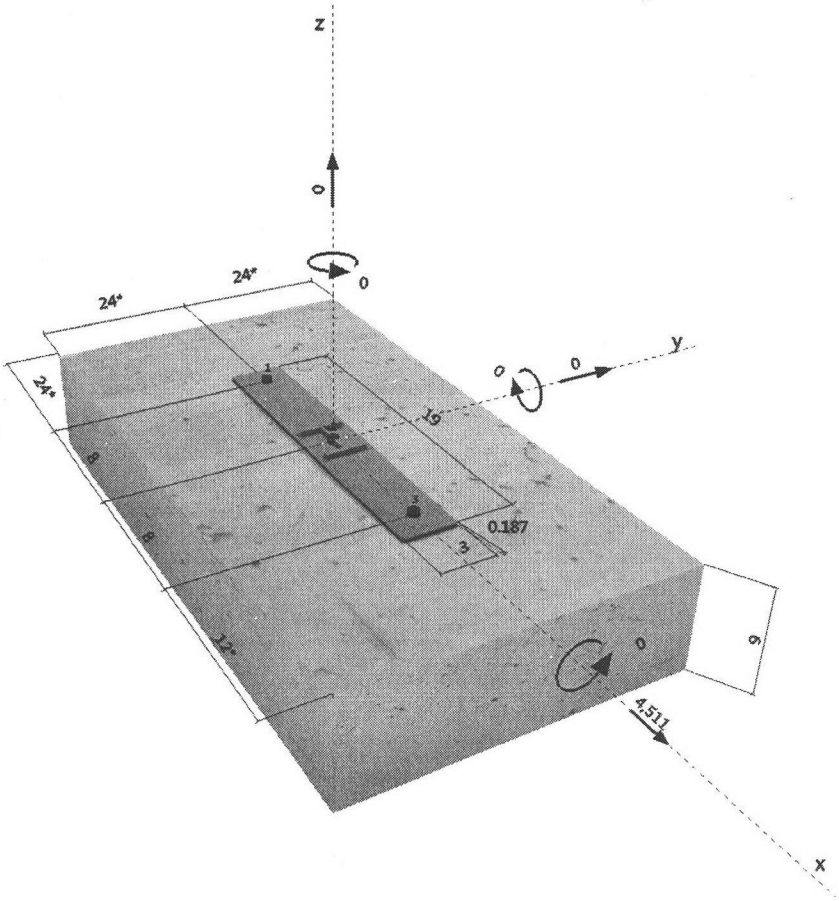

PROFIS Anchor (c) 2003-2009 Hilti AG, FL-9494 Schaan Hilti is a registered Trademark of Hilti AG, Schaan

Company:	Tesner Structural Engineers	Page:	2
Specifier:	John Tesner	Project:	Pioli Residence
Address:	1534 S.E. 25th Avenue	Sub-Project I Pos. No.:	Hold down strap
Phone I Fax:	(503) 239-9119 |	Date:	9/9/2013
E-Mail:			

2 Load case/Resulting anchor forces

Load case: Design loads

Anchor reactions [lb]
Tension force: (+Tension, -Compression)

Anchor	Tension force	Shear force	Shear force x	Shear force y
1	0	1504	1504	0
2	0	1504	1504	0
3	0	1504	1504	0

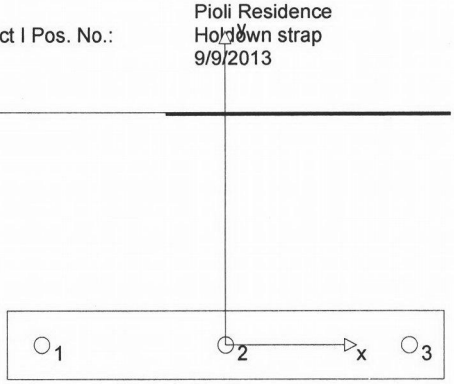

max. concrete compressive strain: - [‰]
max. concrete compressive stress: - [psi]
resulting tension force in (x/y)=(0.000/0.000): 0 [lb]
resulting compression force in (x/y)=(0.000/0.000): 0 [lb]

3 Tension load

	Load N_{ua} [lb]	Capacity ϕN_n [lb]	Utilization $\beta_N = N_{ua}/\phi N_n$	Status
Steel Strength*	N/A	N/A	N/A	N/A
Pullout Strength*	N/A	N/A	N/A	N/A
Concrete Breakout Strength**	N/A	N/A	N/A	N/A

* anchor having the highest loading **anchor group (anchors in tension)

PROFIS Anchor (c) 2003-2009 Hilti AG, FL-9494 Schaan Hilti is a registered Trademark of Hilti AG, Schaan

Company:	Tesner Structural Engineers	Page:	3
Specifier:	John Tesner	Project:	Pioli Residence
Address:	1534 S.E. 25th Avenue	Sub-Project I Pos. No.:	Holdown strap
Phone I Fax:	(503) 239-9119 |	Date:	9/9/2013
E-Mail:			

4 Shear load

	Load V_{ua} [lb]	Capacity ϕV_n [lb]	Utilization $\beta_V = V_{ua}/\phi V_n$	Status
Steel Strength*	1504	6417	24	OK
Steel failure (with lever arm)*	N/A	N/A	N/A	N/A
Pryout Strength**	4511	22213	21	OK
Concrete edge failure in direction x+**	4511	6738	67	OK

* anchor having the highest loading **anchor group (relevant anchors)

4.1 Steel Strength

V_{sa} = ESR value refer to ICC-ES ESR-1917

$\phi V_{steel} \geq V_{ua}$ ACI 318-08 Eq. (D-2)

Variables

n	$A_{se,V}$ [in.^{2}]	f_{uta} [psi]
1	0.16	115000

Calculations

V_{sa} [lb]
9872

Results

V_{sa} [lb]	ϕ_{steel}	ϕV_{sa} [lb]	V_{ua} [lb]
9872	0.650	6417	1504

4.2 Pryout Strength

$V_{cpg} = k_{cp}\left[\left(\frac{A_{Nc}}{A_{Nc0}}\right)\psi_{ec,N}\,\psi_{ed,N}\,\psi_{c,N}\,\psi_{cp,N}\,N_b\right]$ ACI 318-08 Eq. (D-31)

$\phi V_{cpg} \geq V_{ua}$ ACI 318-08 Eq. (D-2)

A_{Nc} see ACI 318-08, Part D.5.2.1, Fig. RD.5.2.1(b)

$A_{Nc0} = 9\,h_{ef}^2$ ACI 318-08 Eq. (D-6)

$\psi_{ec,N} = \left(\frac{1}{1+\frac{2\,e_N}{3\,h_{ef}}}\right) \leq 1.0$ ACI 318-08 Eq. (D-9)

$\psi_{ed,N} = 0.7 + 0.3\left(\frac{c_{a,min}}{1.5h_{ef}}\right) \leq 1.0$ ACI 318-08 Eq. (D-11)

$\psi_{cp,N} = \mathrm{MAX}\left(\frac{c_{a,min}}{c_{ac}}, \frac{1.5h_{ef}}{c_{ac}}\right) \leq 1.0$ ACI 318-08 Eq. (D-13)

$N_b = k_c\,\lambda\,\sqrt{f'_c}\,h_{ef}^{1.5}$ ACI 318-08 Eq. (D-7)

Variables

k_{cp}	h_{ef} [in.]	$e_{c1,N}$ [in.]	$e_{c2,N}$ [in.]	$c_{a,min}$ [in.]
2	4.000	0.000	0.000	12.000

$\psi_{c,N}$	c_{ac} [in.]	k_c	λ	f'_c [psi]
1.000	8.875	17	1	2500

Calculations

A_{Nc} [in.^{2}]	A_{Nc0} [in.^{2}]	$\psi_{ec1,N}$	$\psi_{ec2,N}$	$\psi_{ed,N}$	$\psi_{cp,N}$	N_b [lb]
336.00	144.00	1.000	1.000	1.000	1.000	6800

Results

V_{cpg} [lb]	$\phi_{concrete}$	ϕV_{cpg} [lb]	V_{ua} [lb]
31733	0.700	22213	4511

PROFIS Anchor (c) 2003-2009 Hilti AG, FL-9494 Schaan Hilti is a registered Trademark of Hilti AG, Schaan

4.3 Concrete edge failure in direction x+

$V_{cbg} = \left(\frac{A_{Vc}}{A_{Vc0}}\right) \psi_{ec,V}\, \psi_{ed,V}\, \psi_{c,V}\, \psi_{h,V}\, \psi_{parallel,V}\, V_b$ — ACI 318-08 Eq. (D-22)

$\phi\, V_{cbg} \geq V_{ua}$ — ACI 318-08 Eq. (D-2)

A_{Vc} see ACI 318-08, Part D.6.2.1, Fig. RD.6.2.1(b)

$A_{Vc0} = 4.5\, c_{a1}^2$ — ACI 318-08 Eq. (D-23)

$\psi_{ec,V} = \left(\frac{1}{1 + \frac{2e_v}{3c_{a1}}}\right) \leq 1.0$ — ACI 318-08 Eq. (D-26)

$\psi_{ed,V} = 0.7 + 0.3\left(\frac{c_{a2}}{1.5c_{a1}}\right) \leq 1.0$ — ACI 318-08 Eq. (D-28)

$\psi_{h,V} = \sqrt{\frac{1.5c_{a1}}{h_a}} \geq 1.0$ — ACI 318-08 Eq. (D-29)

$V_b = \left(7\left(\frac{l_e}{d_a}\right)^{0.2} \sqrt{d_a}\right) \lambda \sqrt{f'_c}\, c_{a1}^{1.5}$ — ACI 318-08 Eq. (D-24)

Variables

c_{a1} [in.]	c_{a2} [in.]	e_{cV} [in.]	$\psi_{c,V}$	h_a [in.]
12.000	24.000	0.000	1.000	6.000

l_e [in.]	λ	d_a [in.]	f'_c [psi]	$\psi_{parallel,V}$
4.000	1	0.625	2500	1.000

Calculations

A_{Vc} [in.^{2}]	A_{Vc0} [in.^{2}]	$\psi_{ec,V}$	$\psi_{ed,V}$	$\psi_{h,V}$	V_b [lb]
216.00	648.00	1.000	1.000	1.732	16673

Results

V_{cbg} [lb]	$\phi_{concrete}$	$\phi\, V_{cbg}$ [lb]	V_{ua} [lb]
9626	0.700	6738	4511

5 Warnings

- To avoid failure of the anchor plate the required thickness can be calculated in PROFIS Anchor. Load re-distributions on the anchors due to elastic deformations of the anchor plate are not considered. The anchor plate is assumed to be sufficiently stiff, in order not to be deformed when subjected to the loading!
- Condition A applies when supplementary reinforcement is used. The Φ factor is increased for non-steel Design Strengths except Pullout Strength and Pryout strength. Condition B applies when supplementary reinforcement is not used and for Pullout Strength and Pryout Strength. Refer to your local standard.
- Refer to the manufacturer's product literature for cleaning and installation instructions.
- Checking the transfer of loads into the base material and the shear resistance are required in accordance with ACI318 or the relevant standard!

Fastening meets the design criteria!

PROFIS Anchor (c) 2003-2009 Hilti AG, FL-9494 Schaan Hilti is a registered Trademark of Hilti AG, Schaan

Company:	Tesner Structural Engineers	Page:	5
Specifier:	John Tesner	Project:	Pioli Residence
Address:	1534 S.E. 25th Avenue	Sub-Project I Pos. No.:	Holdown strap
Phone I Fax:	(503) 239-9119 |	Date:	9/9/2013
E-Mail:			

6 Installation data

Anchor plate, steel: -
Profile: S shape (AISC); 3.000 x 2.330 x 0.170 x 0.260 in.
Hole diameter in the fixture: d_f = 0.688 in.
Plate thickness (input): 0.187 in.
Recommended plate thickness: not calculated
Anchor type and diameter: Kwik Bolt TZ - SS 304, 5/8 (4)
Installation torque: 720.001 in.lb
Hole diameter in the base material: 0.625 in.
Hole depth in the base material: 4.750 in.
Minimum thickness of the base material: 6.000 in.
Cleaning: Manual cleaning of the drilled hole according to instructions for use is required.

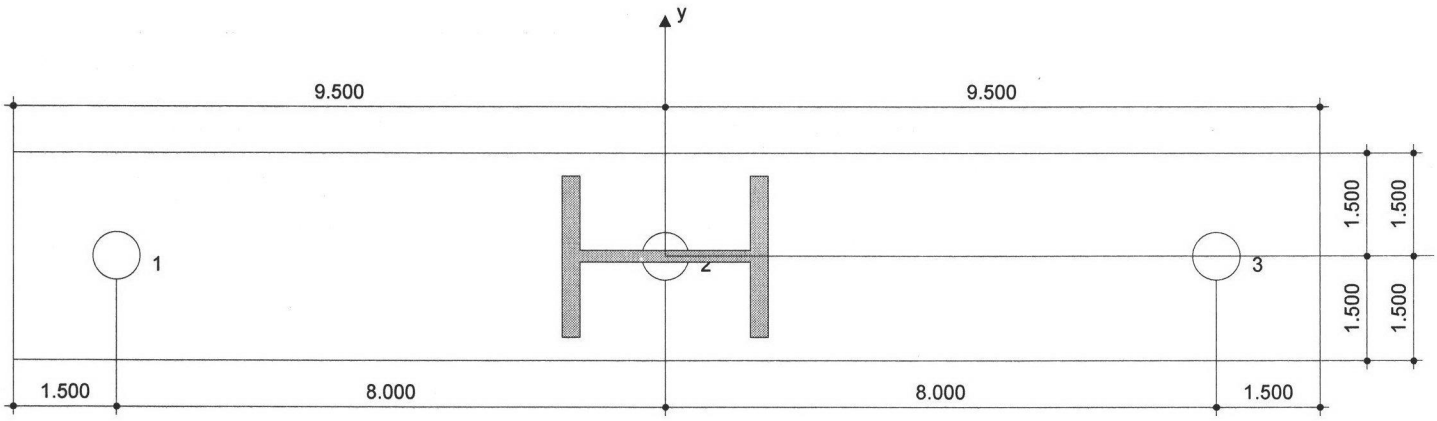

Coordinates Anchor in.

Anchor	x	y	c_{-x}	c_{+x}	c_{-y}	c_{+y}
1	-8.000	0.000	24.000	28.000	24.000	24.000
2	0.000	0.000	32.000	20.000	24.000	24.000
3	8.000	0.000	40.000	12.000	24.000	24.000

PROFIS Anchor (c) 2003-2009 Hilti AG, FL-9494 Schaan Hilti is a registered Trademark of Hilti AG, Schaan

7 Remarks; Your Cooperation Duties

- Any and all information and data contained in the Software concern solely the use of Hilti products and are based on the principles, formulas and security regulations in accordance with Hilti's technical directions and operating, mounting and assembly instructions, etc., that must be strictly complied with by the user. All figures contained therein are average figures, and therefore use-specific tests are to be conducted prior to using the relevant Hilti product. The results of the calculations carried out by means of the Software are based essentially on the data you put in. Therefore, you bear the sole responsibility for the absence of errors, the completeness and the relevance of the data to be put in by you. Moreover, you bear sole responsibility for having the results of the calculation checked and cleared by an expert, particularly with regard to compliance with applicable norms and permits, prior to using them for your specific facility. The Software serves only as an aid to interpret norms and permits without any guarantee as to the absence of errors, the correctness and the relevance of the results or suitability for a specific application.
- You must take all necessary and reasonable steps to prevent or limit damage caused by the Software. In particular, you must arrange for the regular backup of programs and data and, if applicable, carry out the updates of the Software offered by Hilti on a regular basis. If you do not use the AutoUpdate function of the Software, you must ensure that you are using the current and thus up-to-date version of the Software in each case by carrying out manual updates via the Hilti Website. Hilti will not be liable for consequences, such as the recovery of lost or damaged data or programs, arising from a culpable breach of duty by you.

PROFIS Anchor (c) 2003-2009 Hilti AG, FL-9494 Schaan Hilti is a registered Trademark of Hilti AG, Schaan

Company:	Tesner Structural Engineers	Page:	1
Specifier:	John Tesner	Project:	Pioli Residence
Address:	1534 S.E. 25th Avenue, Portland, Oregon	Sub-Project I Pos. No.:	Strap near wall corner
Phone I Fax:	(503) 239-9119 |	Date:	9/9/2013
E-Mail:			

Specifier's comments:

1 Input data

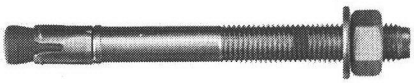

Anchor type and diameter:	**Kwik Bolt TZ - SS 304 5/8 (4)**
Effective embedment depth:	h_{ef} = 4.000 in., h_{nom} = 4.438 in.
Material:	AISI 304
Evaluation Service Report:	ESR-1917
Issued I Valid:	5/1/2013 | 5/1/2015
Proof:	design method ACI 318 / AC193
Stand-off installation:	e_b = 0.000 in. (no stand-off); t = 0.187 in.
Anchor plate:	l_x x l_y x t = 27.000 in. x 17.000 in. x 0.187 in.; (Recommended plate thickness: not calculated)
Profile:	S shape (AISC); (L x W x T x FT) = 3.000 in. x 2.330 in. x 0.170 in. x 0.260 in.
Base material:	cracked concrete, 2500, f_c' = 2500 psi; h = 6.000 in.
Reinforcement:	tension: condition B, shear: condition B; no supplemental splitting reinforcement present edge reinforcement: none or < No. 4 bar
Seismic loads (cat. C, D, E, or F)	no

Geometry [in.] & Loading [lb, in.lb]

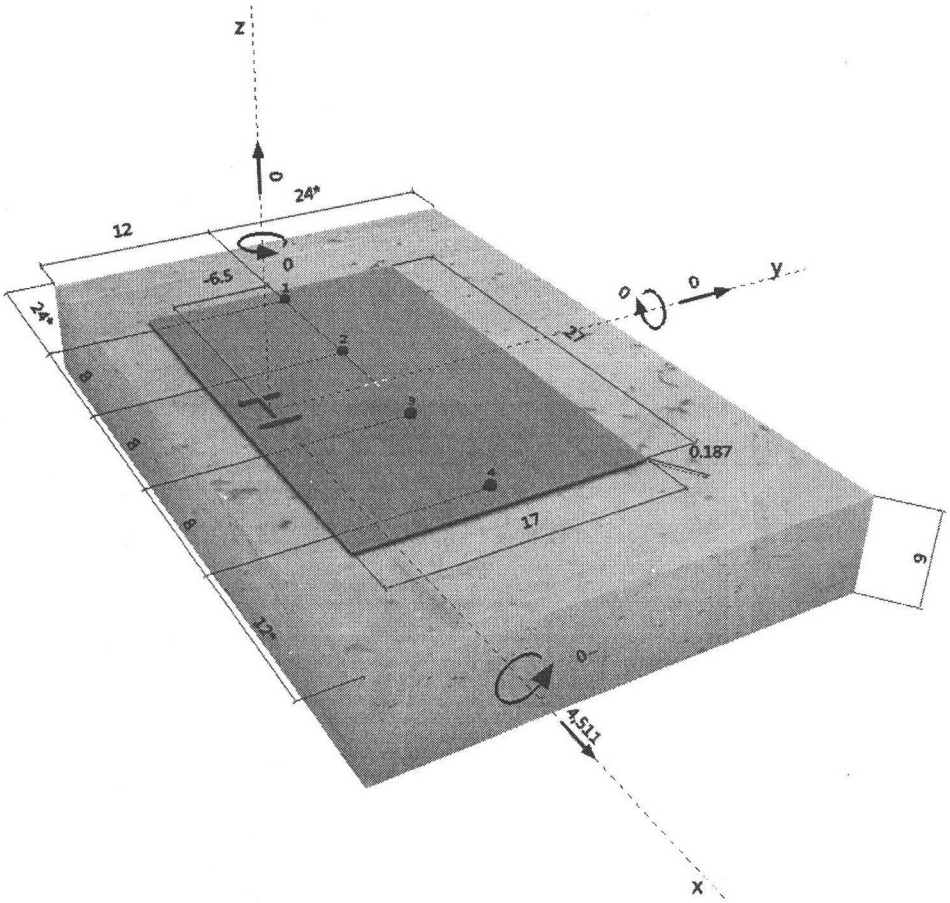

PROFIS Anchor (c) 2003-2009 Hilti AG, FL-9494 Schaan Hilti is a registered Trademark of Hilti AG, Schaan

Company:	Tesner Structural Engineers	Page:	2
Specifier:	John Tesner	Project:	Pioli Residence
Address:	1534 S.E. 25th Avenue, Portland, Oregon	Sub-Project I Pos. No.:	Strap near wall corner
Phone I Fax:	(503) 239-9119 |	Date:	9/9/2013
E-Mail:			

2 Load case/Resulting anchor forces

Load case: Design loads

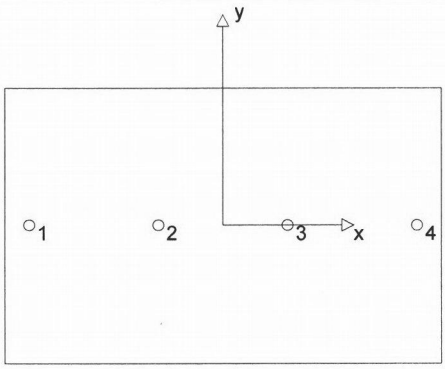

Anchor reactions [lb]
Tension force: (+Tension, -Compression)

Anchor	Tension force	Shear force	Shear force x	Shear force y
1	0	1575	1128	-1100
2	0	1186	1128	-367
3	0	1186	1128	367
4	0	1575	1128	1100

max. concrete compressive strain: - [‰]
max. concrete compressive stress: - [psi]
resulting tension force in (x/y)=(0.000/0.000): 0 [lb]
resulting compression force in (x/y)=(0.000/0.000): 0 [lb]

3 Tension load

	Load N_{ua} [lb]	Capacity ϕN_n [lb]	Utilization $\beta_N = N_{ua}/\phi N_n$	Status
Steel Strength*	N/A	N/A	N/A	N/A
Pullout Strength*	N/A	N/A	N/A	N/A
Concrete Breakout Strength**	N/A	N/A	N/A	N/A

* anchor having the highest loading **anchor group (anchors in tension)

PROFIS Anchor (c) 2003-2009 Hilti AG, FL-9494 Schaan Hilti is a registered Trademark of Hilti AG, Schaan

Company:	Tesner Structural Engineers	Page:	3
Specifier:	John Tesner	Project:	Pioli Residence
Address:	1534 S.E. 25th Avenue, Portland, Oregon	Sub-Project I Pos. No.:	Strap near wall corner
Phone I Fax:	(503) 239-9119 |	Date:	9/9/2013
E-Mail:			

4 Shear load

	Load V_{ua} [lb]	Capacity ϕV_n [lb]	Utilization $\beta_V = V_{ua}/\phi V_n$	Status
Steel Strength*	1575	6417	25	OK
Steel failure (with lever arm)*	N/A	N/A	N/A	N/A
Pryout Strength*	1575	7933	20	OK
Concrete edge failure in direction x+**	4743	5054	94	OK

* anchor having the highest loading **anchor group (relevant anchors)

4.1 Steel Strength

V_{sa} = ESR value — refer to ICC-ES ESR-1917

$\phi V_{steel} \geq V_{ua}$ — ACI 318-08 Eq. (D-2)

Variables

n	$A_{se,V}$ [in.^{2}]	f_{uta} [psi]
1	0.16	115000

Calculations

V_{sa} [lb]
9872

Results

V_{sa} [lb]	ϕ_{steel}	ϕV_{sa} [lb]	V_{ua} [lb]
9872	0.650	6417	1575

4.2 Pryout Strength

$V_{cp} = k_{cp}\left[\left(\frac{A_{Nc}}{A_{Nc0}}\right)\psi_{ed,N}\,\psi_{c,N}\,\psi_{cp,N}\,N_b\right]$ — ACI 318-08 Eq. (D-30)

$\phi V_{cp} \geq V_{ua}$ — ACI 318-08 Eq. (D-2)

A_{Nc} see ACI 318-08, Part D.5.2.1, Fig. RD.5.2.1(b)

$A_{Nc0} = 9\,h_{ef}^2$ — ACI 318-08 Eq. (D-6)

$\psi_{ec,N} = \left(\frac{1}{1+\frac{2\,e_N'}{3\,h_{ef}}}\right) \leq 1.0$ — ACI 318-08 Eq. (D-9)

$\psi_{ed,N} = 0.7 + 0.3\left(\frac{c_{a,min}}{1.5h_{ef}}\right) \leq 1.0$ — ACI 318-08 Eq. (D-11)

$\psi_{cp,N} = \mathrm{MAX}\left(\frac{c_{a,min}}{c_{ac}}, \frac{1.5h_{ef}}{c_{ac}}\right) \leq 1.0$ — ACI 318-08 Eq. (D-13)

$N_b = k_c\,\lambda\,\sqrt{f_c'}\,h_{ef}^{1.5}$ — ACI 318-08 Eq. (D-7)

Variables

k_{cp}	h_{ef} [in.]	$e_{c1,N}$ [in.]	$e_{c2,N}$ [in.]	$c_{a,min}$ [in.]
2	4.000	0.000	0.000	12.000

$\psi_{c,N}$	c_{ac} [in.]	k_c	λ	f_c' [psi]
1.000	8.875	17	1	2500

Calculations

A_{Nc} [in.^{2}]	A_{Nc0} [in.^{2}]	$\psi_{ec1,N}$	$\psi_{ec2,N}$	$\psi_{ed,N}$	$\psi_{cp,N}$	N_b [lb]
120.00	144.00	1.000	1.000	1.000	1.000	6800

Results

V_{cp} [lb]	$\phi_{concrete}$	ϕV_{cp} [lb]	V_{ua} [lb]
11333	0.700	7933	1575

PROFIS Anchor (c) 2003-2009 Hilti AG, FL-9494 Schaan Hilti is a registered Trademark of Hilti AG, Schaan

4.3 Concrete edge failure in direction x+

$V_{cbg} = \left(\frac{A_{Vc}}{A_{Vc0}}\right) \psi_{ec,V}\, \psi_{ed,V}\, \psi_{c,V}\, \psi_{h,V}\, \psi_{parallel,V}\, V_b$ ACI 318-08 Eq. (D-22)

$\phi\, V_{cbg} \geq V_{ua}$ ACI 318-08 Eq. (D-2)

A_{Vc} see ACI 318-08, Part D.6.2.1, Fig. RD.6.2.1(b)

$A_{Vc0} = 4.5\, c_{a1}^2$ ACI 318-08 Eq. (D-23)

$\psi_{ec,V} = \left(\frac{1}{1 + \frac{2e_v}{3c_{a1}}}\right) \leq 1.0$ ACI 318-08 Eq. (D-26)

$\psi_{ed,V} = 0.7 + 0.3\left(\frac{c_{a2}}{1.5c_{a1}}\right) \leq 1.0$ ACI 318-08 Eq. (D-28)

$\psi_{h,V} = \sqrt{\frac{1.5c_{a1}}{h_a}} \geq 1.0$ ACI 318-08 Eq. (D-29)

$V_b = \left(7\left(\frac{l_e}{d_a}\right)^{0.2} \sqrt{d_a}\right) \lambda \sqrt{f'_c}\, c_{a1}^{1.5}$ ACI 318-08 Eq. (D-24)

Variables

c_{a1} [in.]	c_{a2} [in.]	e_{cV} [in.]	$\psi_{c,V}$	h_a [in.]
12.000	12.000	0.000	1.000	6.000

l_e [in.]	λ	d_a [in.]	f'_c [psi]	$\psi_{parallel,V}$
4.000	1	0.625	2500	1.000

Calculations

A_{Vc} [in.^{2}]	A_{Vc0} [in.^{2}]	$\psi_{ec,V}$	$\psi_{ed,V}$	$\psi_{h,V}$	V_b [lb]
180.00	648.00	1.000	0.900	1.732	16673

Results

V_{cbg} [lb]	$\phi_{concrete}$	$\phi\, V_{cbg}$ [lb]	V_{ua} [lb]
7220	0.700	5054	4743

5 Warnings

- To avoid failure of the anchor plate the required thickness can be calculated in PROFIS Anchor. Load re-distributions on the anchors due to elastic deformations of the anchor plate are not considered. The anchor plate is assumed to be sufficiently stiff, in order not to be deformed when subjected to the loading!
- Condition A applies when supplementary reinforcement is used. The Φ factor is increased for non-steel Design Strengths except Pullout Strength and Pryout strength. Condition B applies when supplementary reinforcement is not used and for Pullout Strength and Pryout Strength. Refer to your local standard.
- Refer to the manufacturer's product literature for cleaning and installation instructions.
- Checking the transfer of loads into the base material and the shear resistance are required in accordance with ACI318 or the relevant standard!

Fastening meets the design criteria!

PROFIS Anchor (c) 2003-2009 Hilti AG, FL-9494 Schaan Hilti is a registered Trademark of Hilti AG, Schaan

Company:	Tesner Structural Engineers	Page:	5
Specifier:	John Tesner	Project:	Pioli Residence
Address:	1534 S.E. 25th Avenue, Portland, Oregon	Sub-Project I Pos. No.:	Strap near wall corner
Phone I Fax:	(503) 239-9119 |	Date:	9/9/2013
E-Mail:			

6 Installation data

Anchor plate, steel: -
Profile: S shape (AISC); 3.000 x 2.330 x 0.170 x 0.260 in.
Hole diameter in the fixture: d_f = 0.688 in.
Plate thickness (input): 0.187 in.
Recommended plate thickness: not calculated
Anchor type and diameter: Kwik Bolt TZ - SS 304, 5/8 (4)
Installation torque: 720.001 in.lb
Hole diameter in the base material: 0.625 in.
Hole depth in the base material: 4.750 in.
Minimum thickness of the base material: 6.000 in.
Cleaning: Manual cleaning of the drilled hole according to instructions for use is required.

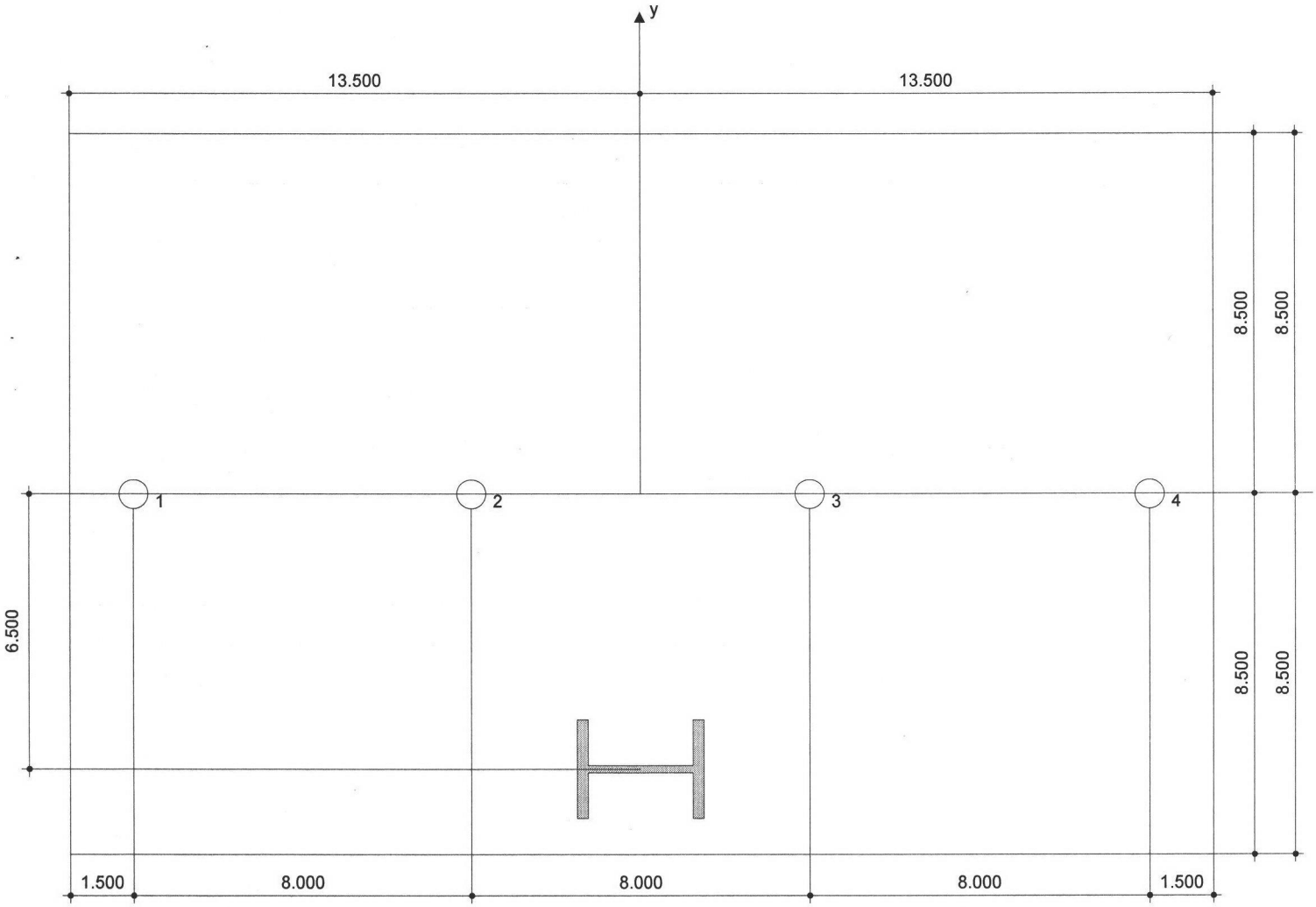

Coordinates Anchor in.

Anchor	x	y	c_{-x}	c_{+x}	c_{-y}	c_{+y}
1	-12.000	0.000	24.000	36.000	12.000	24.000
2	-4.000	0.000	32.000	28.000	12.000	24.000
3	4.000	0.000	40.000	20.000	12.000	24.000
4	12.000	0.000	48.000	12.000	12.000	24.000

PROFIS Anchor (c) 2003-2009 Hilti AG, FL-9494 Schaan Hilti is a registered Trademark of Hilti AG, Schaan

7 Remarks; Your Cooperation Duties

- Any and all information and data contained in the Software concern solely the use of Hilti products and are based on the principles, formulas and security regulations in accordance with Hilti's technical directions and operating, mounting and assembly instructions, etc., that must be strictly complied with by the user. All figures contained therein are average figures, and therefore use-specific tests are to be conducted prior to using the relevant Hilti product. The results of the calculations carried out by means of the Software are based essentially on the data you put in. Therefore, you bear the sole responsibility for the absence of errors, the completeness and the relevance of the data to be put in by you. Moreover, you bear sole responsibility for having the results of the calculation checked and cleared by an expert, particularly with regard to compliance with applicable norms and permits, prior to using them for your specific facility. The Software serves only as an aid to interpret norms and permits without any guarantee as to the absence of errors, the correctness and the relevance of the results or suitability for a specific application.
- You must take all necessary and reasonable steps to prevent or limit damage caused by the Software. In particular, you must arrange for the regular backup of programs and data and, if applicable, carry out the updates of the Software offered by Hilti on a regular basis. If you do not use the AutoUpdate function of the Software, you must ensure that you are using the current and thus up-to-date version of the Software in each case by carrying out manual updates via the Hilti Website. Hilti will not be liable for consequences, such as the recovery of lost or damaged data or programs, arising from a culpable breach of duty by you.

PROFIS Anchor (c) 2003-2009 Hilti AG, FL-9494 Schaan Hilti is a registered Trademark of Hilti AG, Schaan