2

kpff

11-202090 REV 02 CO

kpff Consulting Engineers

April 23, 2012

Ms. Amalia Mohr
Fletcher Farr Ayotte
520 SW Yamhill Street, Suite 900
Portland, Oregon 97204

RE: Galleria Building
CCD #6 & #13 - Narrative of Structural Revisions

Dear Amalia:

This letter summarizes the structural revisions between the CCD #6 package and the CCD #13 package.

- **S-004, Live Load Diagrams**
  - Revised design live loads for the Receiving Area, Grid B-F/3-5, to account for reduced pallet rack loads based on Target input.
- **S-101, First Floor Plan**
  - East sidewalk reframing area Grid J-K/7-10, west sidewalk area Grid aa-A/4-7, and north sidewalk area Grid B-C/0-1
    - Modified details to reflect a single layer system (top of structure equals top of sidewalk) in lieu of the previous double layer system.
    - With the thinner assembly, we can reuse some of the existing beams.
  - Receiving Area, Grid B-F/3-5
    - Based on input by Target, new steel beams were added to the existing structure to support the pallet racks at specific locations in lieu of strengthening the entire area with the previous 12" one-way concrete slab. The new beams are aligned with the rack support legs.
  - Added detail cuts for new street light foundations to match the locations shown on the Civil drawings.
- **S-403, Beam Strengthening**
  - Added type R-M for a new channel at the Receiving Area.
- **S-521, Concrete Details**
  - Modified multiple details for removal of the one-way concrete slab.
- **S-522, Concrete Details**
  - Removed multiple details related to the previous one-way concrete slab strengthening approach.
  - Added two details for the new street light foundations, similar to City of Portland standards.
    - Note that calculations for these added details have been previously submitted as part of the 60% PBOT review package, and have been included in the attached calculations for reference.

11-202090 REV 02 CD

111 SW Fifth Avenue, Suite 2500 Portland, Oregon 97204-3628 (503) 227-3251 Fax (503) 227-7980

Seattle Tacoma Portland Eugene San Francisco Sacramento Los Angeles Irvine San Diego Phoenix Denver St. Louis New York

- **S-621, Steel Details**
  - Revised detail 17 for removal of the one-way concrete slab.
- **S-625, Steel Details**
  - Revised several details to reflect the single layer sidewalk system in lieu of the two layer system.
  - Added several details for connections of the new steel beams at the Receiving area.

If you have any questions or need further information, please call me.

Sincerely,

Justin Brown, P.E.

JB:kw

210445/KPFF CCD#6&13 Narrative.doc

STRUCTURAL REGISTERED PROFESSIONAL ENGINEER 17338 OREGON NOV. 9, 1999 BLAKE D. PATSY

EXPIRES: 12-31-2012

kpff

Galleria Building Renovation Portland, Oregon

Structural Calculations

KPFF Project No. 210445.03
April 23, 2012

Submitted to:

Fletcher Farr Ayotte
520 SW Yamhill St., Suite 900
Portland, OR 97204

Submitted by:

KPFF Consulting Engineers
111 SW Fifth Avenue, Suite 2500
Portland, Oregon 97204-3628

kpff Consulting Engineers

April 23, 2012

Mr. Amalia Mohr
Fletcher Farr Ayotte
520 SW Yamhill Street, Suite 900
Portland, Oregon 97204

RE: Galleria Building Retail Tenant Core and Shell
Additional Calculations for Revised Drawings

Dear Amalia:

Attached please find calculation sheets 1 through 53, dated April 23, 2012 and sheets 1 through 8, dated April 11, 2012, which verify the structural adequacy of the Galleria Building Core and Shell project revised drawings, as shown on drawings S-004, S-101, S-403, S-521, S-522, S-620, S-621, and S-625, dated April 19, 2012. Design is based on the requirements of the 2010 Oregon Structural Specialty Code.

If you have any questions or need further information, please call me.

Sincerely,

Justin Brown, PE

STRUCTURAL REGISTERED PROFESSIONAL ENGINEER 17688 OREGON NOV. 9, 1999 BLAKE D. PATSY
EXPIRES: 12-31-2012

Attachments

JB:kw
210445.03/calc letter 04-23-12.docx

111 SW Fifth Avenue, Suite 2500 Portland, Oregon 97204-3628 (503) 227-3251 Fax (503) 227-7980

Seattle Tacoma Portland Eugene San Francisco Sacramento Los Angeles Irvine San Diego Phoenix Denver St. Louis New York

kpff Consulting Engineers

April 23, 2012

Ms. Amalia Mohr
Fletcher Farr Ayotte
520 SW Yamhill Street, Suite 900
Portland, Oregon 97204

RE: Galleria Building
CCD #6 & #13 - Narrative of Structural Revisions

Dear Amalia:

This letter summarizes the structural revisions between the CCD #6 package and the CCD #13 package.

- **S-004, Live Load Diagrams**
  - Revised design live loads for the Receiving Area, Grid B-F/3-5, to account for reduced pallet rack loads based on Target input.
- **S-101, First Floor Plan**
  - East sidewalk reframing area Grid J-K/7-10, west sidewalk area Grid aa-A/4-7, and north sidewalk area Grid B-C/0-1
    - Modified details to reflect a single layer system (top of structure equals top of sidewalk) in lieu of the previous double layer system.
    - With the thinner assembly, we can reuse some of the existing beams.
  - Receiving Area, Grid B-F/3-5
    - Based on input by Target, new steel beams were added to the existing structure to support the pallet racks at specific locations in lieu of strengthening the entire area with the previous 12" one-way concrete slab. The new beams are aligned with the rack support legs.
  - Added detail cuts for new street light foundations to match the locations shown on the Civil drawings.
- **S-403, Beam Strengthening**
  - Added type R-M for a new channel at the Receiving Area.
- **S-521, Concrete Details**
  - Modified multiple details for removal of the one-way concrete slab.
- **S-522, Concrete Details**
  - Removed multiple details related to the previous one-way concrete slab strengthening approach.
  - Added two details for the new street light foundations, similar to City of Portland standards.
    - Note that calculations for these added details have been previously submitted as part of the 60% PBOT review package, and have been included in the attached calculations for reference.

111 SW Fifth Avenue, Suite 2500 Portland, Oregon 97204-3628 (503) 227-3251 Fax (503) 227-7980

Seattle Tacoma Portland Eugene San Francisco Sacramento Los Angeles Irvine San Diego Phoenix Denver St. Louis New York

- **S-621, Steel Details**
  - Revised detail 17 for removal of the one-way concrete slab.
- **S-625, Steel Details**
  - Revised several details to reflect the single layer sidewalk system in lieu of the two layer system.
  - Added several details for connections of the new steel beams at the Receiving area.

If you have any questions or need further information, please call me.

Sincerely,

Justin Brown, P.E.

JB:kw
210445/KPFF CCD#6&13 Narrative.doc

STRUCTURAL REGISTERED PROFESSIONAL ENGINEER
17588
OREGON
NOV. 9, 1999
BLAKE D. PATSY
EXPIRES: 12-31-2012

REVISED RECEIVING AREA CALCULATIONS

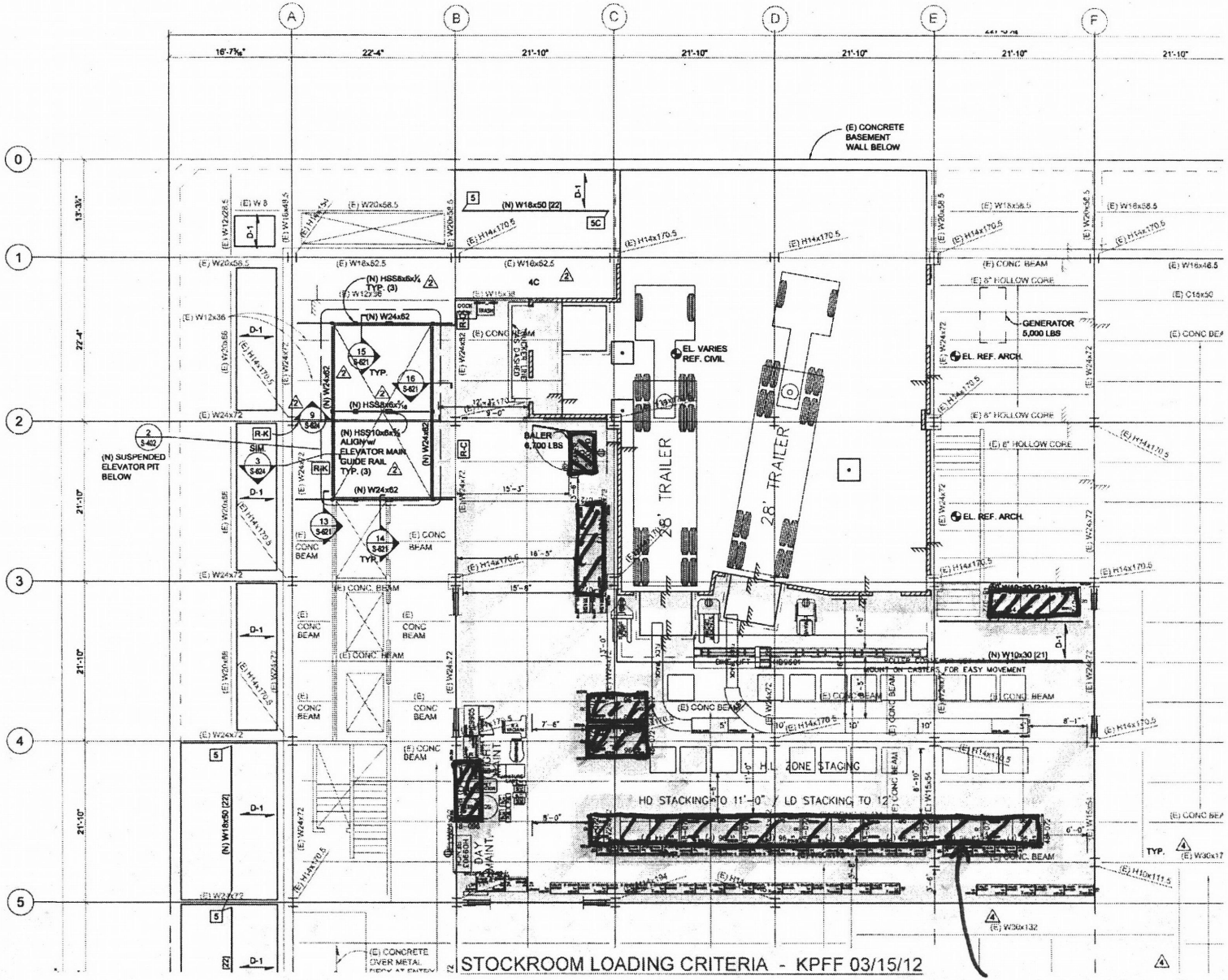

Target Criteria

6'-0" HD PALLET RACK POST LOAD + UNIFORM 125 PSF; OR UNIFORM 175 PSF

UNIFORM 150 PSF

BALER LOAD

STOCKROOM LOADING CRITERIA - KPFF 03/15/12

Final Rack Locations

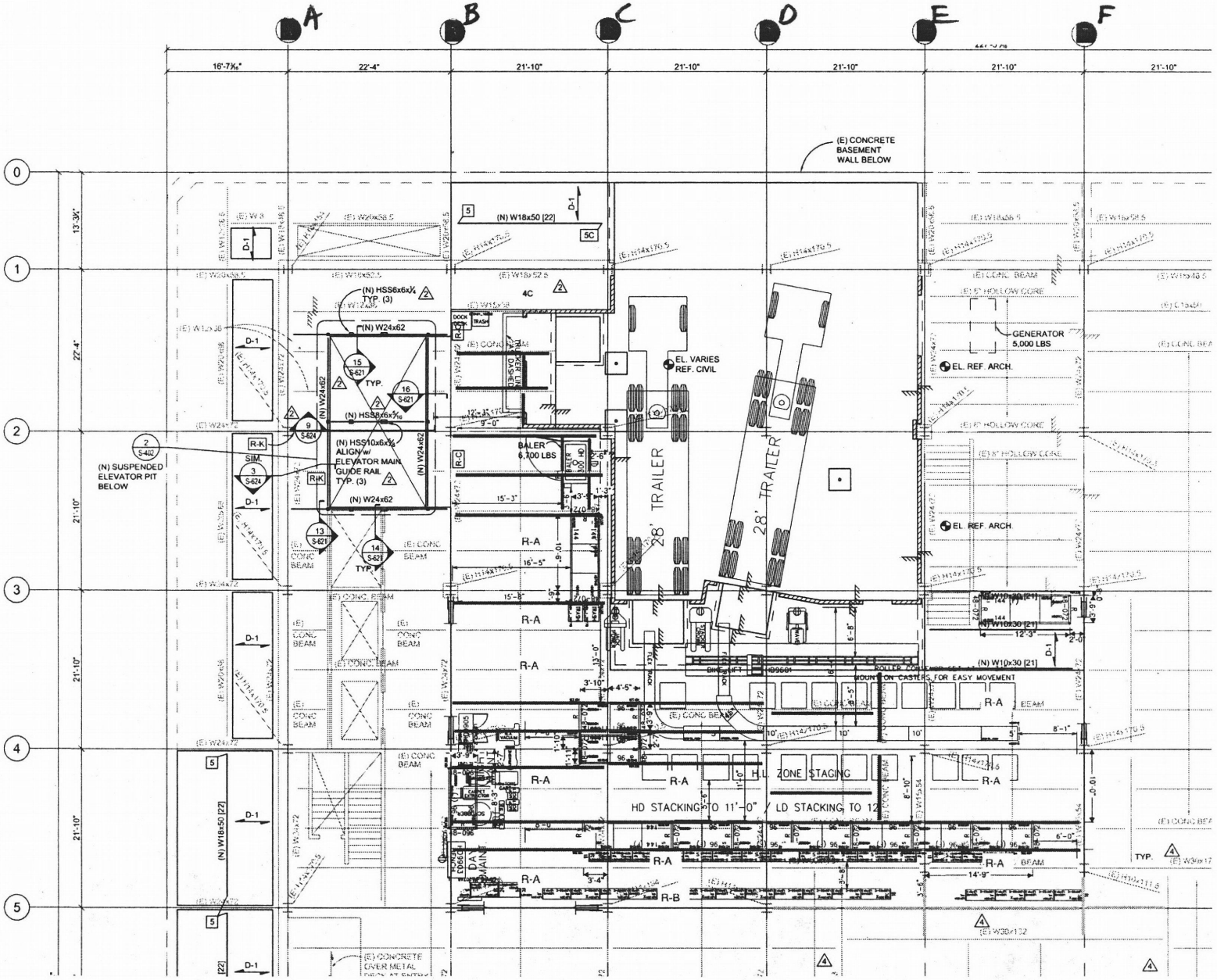
A
B
C
D
E
F
0
1
2
3
4
5
16'-7 7/8"
22'-4"
21'-10"
21'-10"
21'-10"
21'-10"
21'-10"
13'-3 1/2"
22'-4"
21'-10"
21'-10"
21'-10"
(E) CONCRETE BASEMENT WALL BELOW
(N) W18x50 [22]
5C
4C
(N) HSS6x6x1/4 TYP. (3)
(N) W24x62
(N) HSS8x8x7/16
(N) HSS10x6x1/4 ALIGN w/ ELEVATOR MAIN GUIDE RAIL TYP. (3)
(N) SUSPENDED ELEVATOR PIT BELOW
EL. VARIES REF. CIVIL
BALER 6,700 LBS
28' TRAILER
28' TRAILER
GENERATOR 5,000 LBS
EL. REF. ARCH.
(E) 8" HOLLOW CORE
(E) 6" HOLLOW CORE
(N) W10x30 [21]
MOUNT ON CASTERS FOR EASY MOVEMENT
R-A
R-B
R-C
R-K
HD STACKING TO 11'-0" / LD STACKING TO 12
(N) W18x50 [22]
(E) CONCRETE OVER METAL
TYP.

2

kpff Consulting Engineers, Portland, Oregon	Project: Galleria	By: JDB	Sheet No. 3
	Location	Date	
	Client	Revised	Job No.
		Date	

Receiving Area

Add beams below Heavy Duty Pallet Racks
↳ Per Target Criteria

@ Rack: P = 2.1k @ ends + 125 psf uniform
or
175 psf uniform

Elsewhere
w = 150 psf uniform

Slab DL + Super = 87 psf
(E) Beam = 150 plf

• w/ Slab only @ Point Load

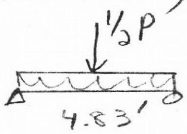

Per Foot $w_{DL} = 87\,psf$ $\quad \frac{1}{2}P = 1.05k$
$w_{LL} = 125\,psf$

$$M_u = (1.2 \cdot 87 + 1.6 \cdot 125) \cdot 1' \cdot \frac{4.83^2}{8} \cdot \frac{12}{1000} + 1.6 \cdot 1.05k \cdot \frac{4.83}{4} \cdot 12$$

$$M_u = 50.1\,k\text{-}in \gg \phi M_n^+ = 25.6\,k\text{-}in$$

↳ Slab Only N.G.

kpff Consulting Engineers, Portland, Oregon	Project Galleria	By JDB	Sheet No. 4
	Location	Date	
	Client	Revised	Job No.
		Date	

(E) Joists w/ Rack Loads

B-C/4.5

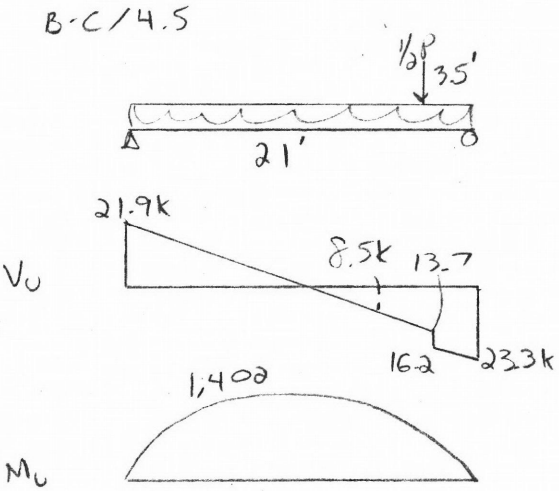

w/ 150 psf LL

$w_D = 113\,psf \cdot 5.46' = 617\,plf$

$L = 150\,psf \cdot 5.46' \quad 819\,plf$

$\frac{1}{2}P = \frac{1}{2} \cdot 2.1k \cdot 4.5'/5.46' + \frac{1}{2} \cdot 2.1k \cdot 2.5'/5.46'$

$= 1.35k$

$V_u = 23.3k$

$M_u = 1{,}402\ k\text{-}in$

$\phi V_n = 22.8k$

$\phi M_n = 1{,}330\ k\text{-}in$ N.G

↳ Joists w/ multiple interior loads = N.G. $M_u \cong 1{,}800\,k\text{-}in$

C-D/3.8

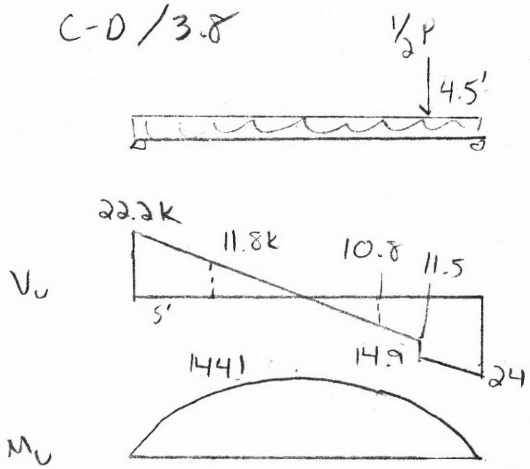

$w_D = 617\,plf$

$w_L = 819\,plf$

$\frac{1}{2}P = \frac{1}{2} \cdot 2.1k \cdot 3.5'/5.46' + \frac{1}{2} \cdot 2.1k \cdot 3.63'/5.46' + \frac{1}{2} \cdot 2.1k \cdot 2.88'/5.46'$

$= 1.93k$

$V_u = 24k$

$M_u = 1{,}441\ k\text{-}in$

N.G.

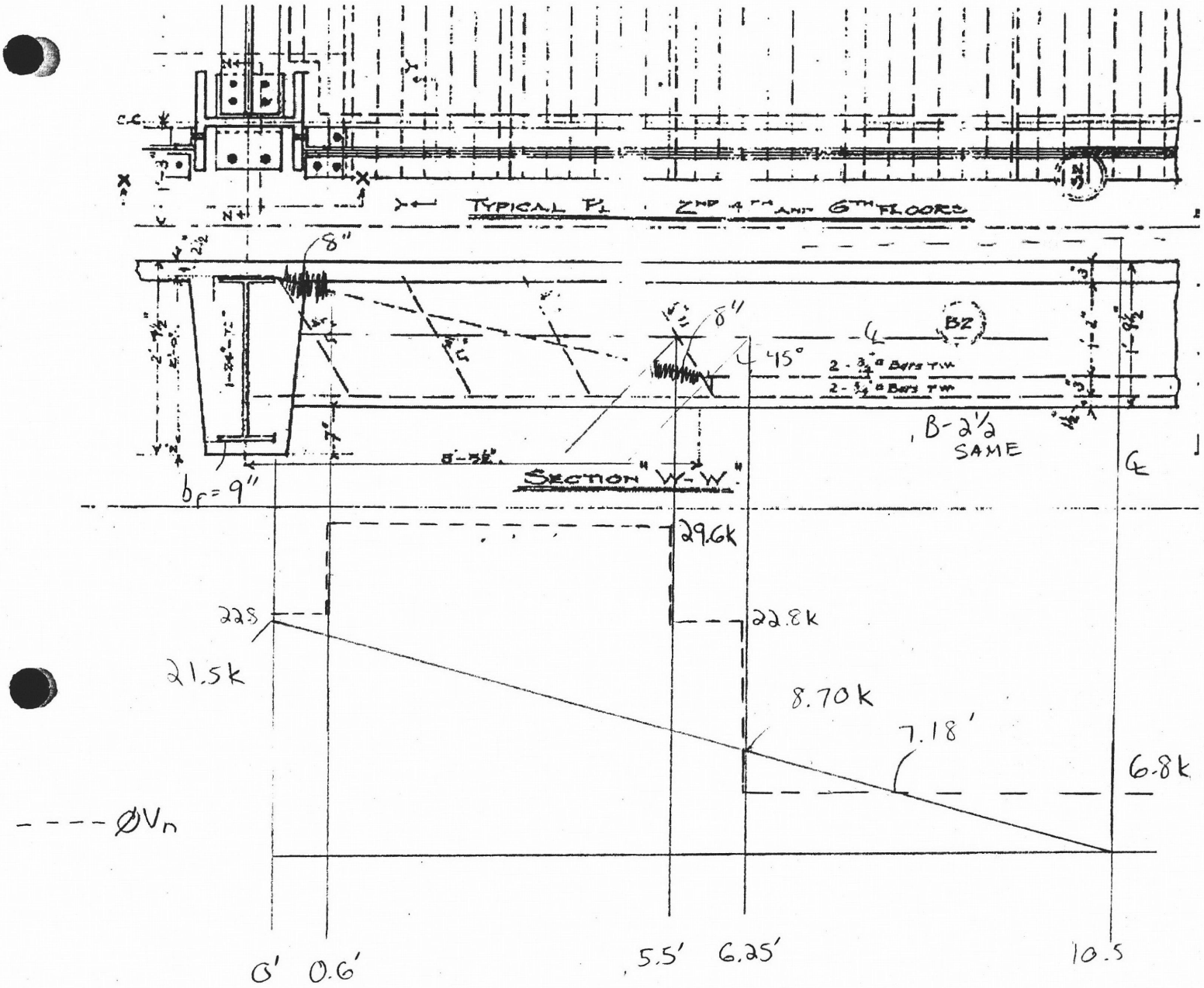

$\frac{8.7}{6.8} = 1.28\sqrt{f'_c}$

For 12"

150 psi
21.85'

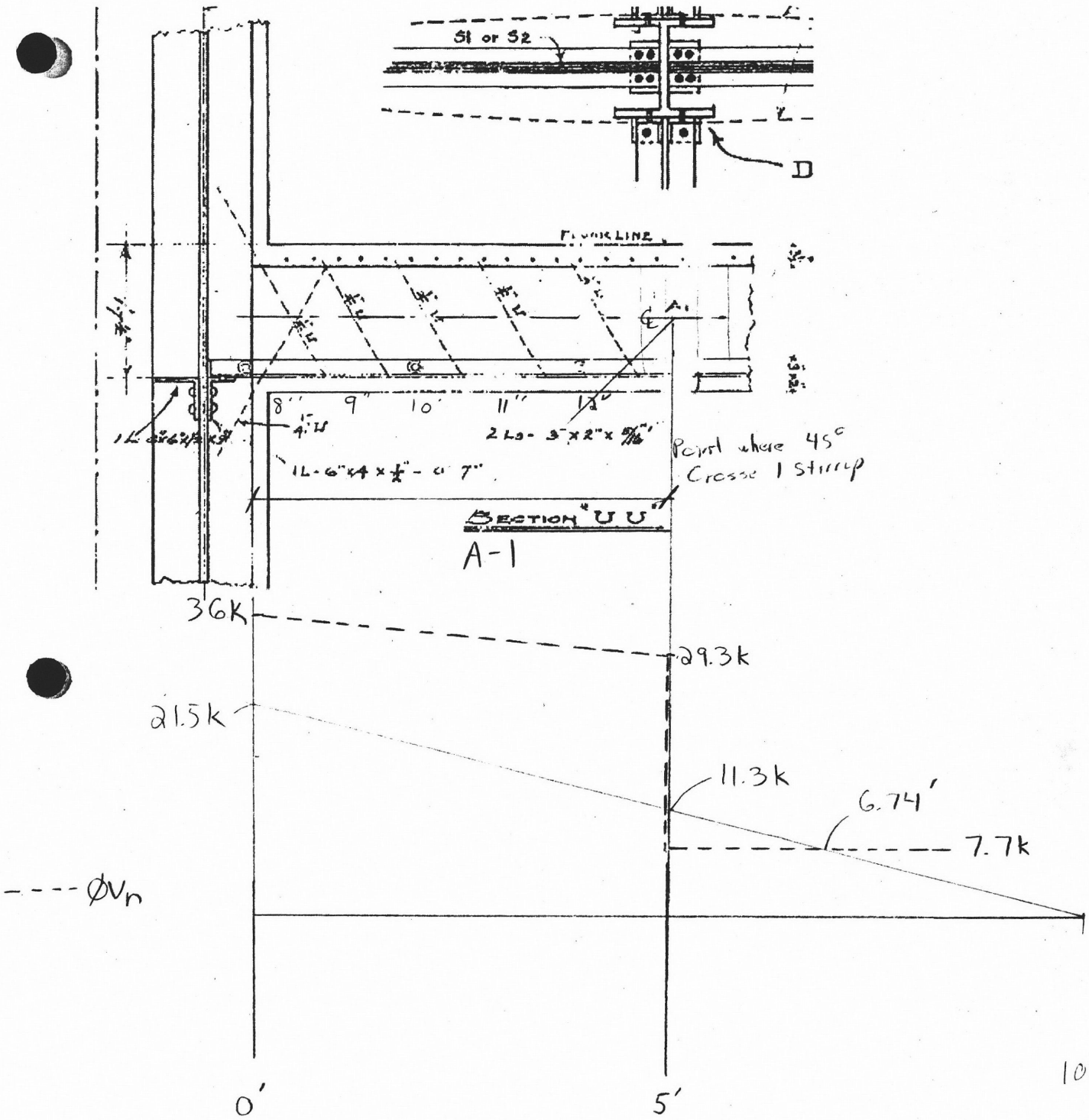

N.T.S.

$\frac{11.3}{7.7} = 1.47\sqrt{f'_c}$

For 21"

150 psf

21.83'

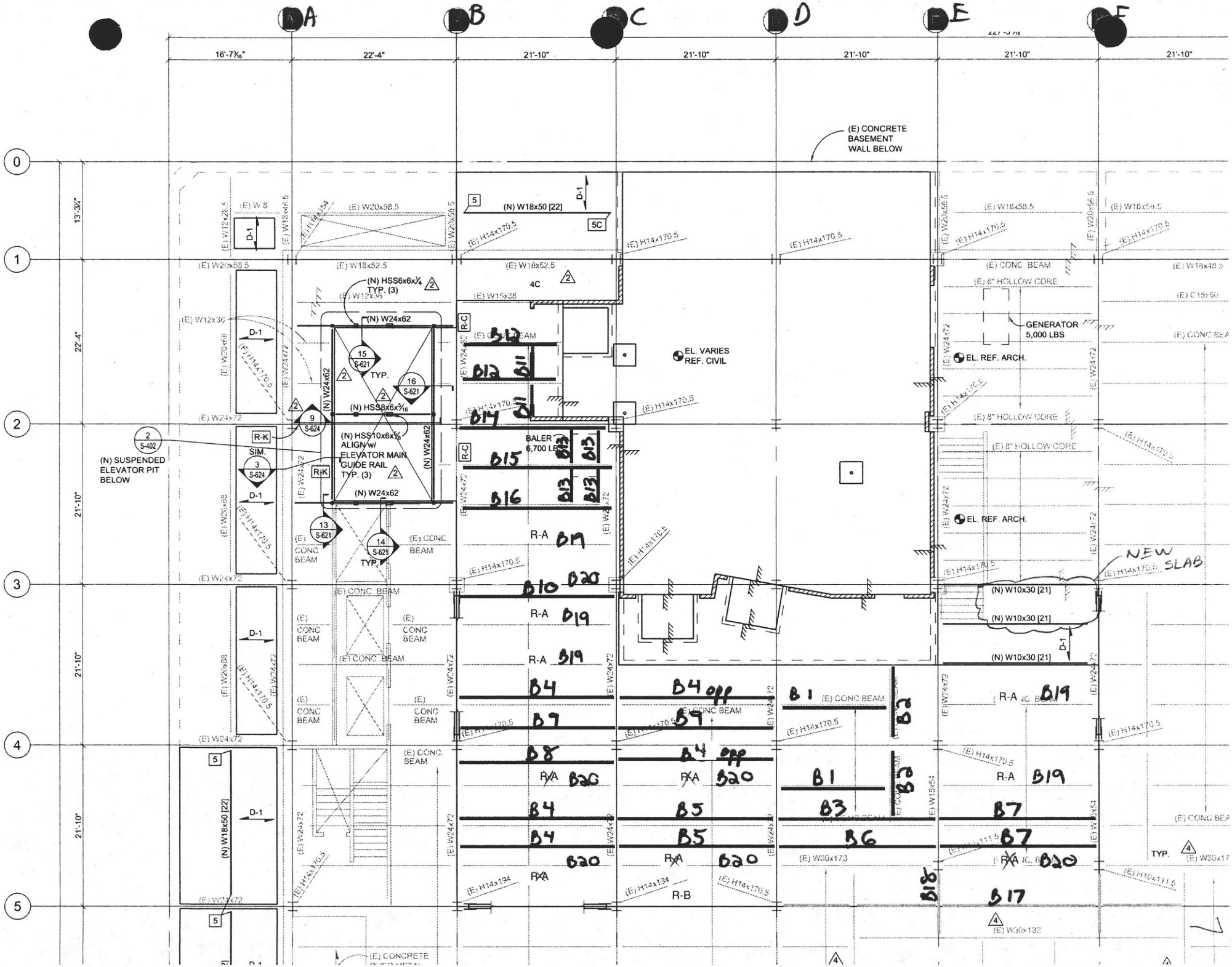
A
B
C
D
E
F
16'-7 3/16"
22'-4"
21'-10"
21'-10"
21'-10"
21'-10"
21'-10"
0
1
2
3
4
5
13'-3 1/2"
22'-4"
21'-10"
21'-10"
21'-10"
(E) CONCRETE BASEMENT WALL BELOW
(N) W18x50 [22]
5C
4C
(N) HSS6x6x1/4 TYP. (3)
(N) W24x62
(N) HSS8x6x5/16
(N) HSS10x6x5/8 ALIGN w/ ELEVATOR MAIN GUIDE RAIL TYP. (3)
(N) SUSPENDED ELEVATOR PIT BELOW
BALER 6,700 LBS
EL. VARIES REF. CIVIL
GENERATOR 5,000 LBS
EL. REF. ARCH.
(E) 8" HOLLOW CORE
(E) CONC BEAM
(N) W10x30 [21]
NEW SLAB
R-A
R-B
R-C
R-K
(E) CONCRETE

kpff Consulting Engineers, Portland, Oregon	Project: Galleria	By: JDB	Sheet No. 8
	Location	Date	
	Client	Revised	Job No.
		Date	

* See Beam Layout

B1

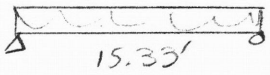

DL = 5.46' · 87psf + 150plf = 625plf

LL = 5.46' · 150psf = 820plf

w/ C12x25 take full load, braced $R_D = 5k$ $R_L = 6.3k$ $R_U = 16k$

DCR = 0.77

$\Delta_L = 0.24'' = L/750$

B2

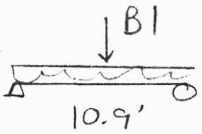

DL = 6.5'/2 · 87psf + 150plf = 433plf

LL = " · 150psf = 488plf

C12x25 Full load, full braced $R_D = 5k$ $R_L = 5.8k$ $R_U = 15.3k$

DCR = 0.80

$\Delta_L = 0.11'' = L/1200$

↳ Use C15

B3

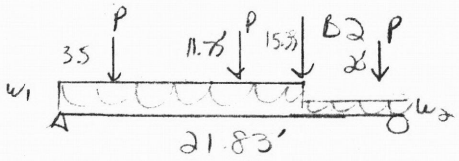

P = 2.1k

$w_1 = (4.5'/2 + 1) \cdot 87psf = 283plf$

L = " · 150psf = 488plf

w_2 = " 1 · 87psf = 87plf

150psf = 150plf

w/ unbraced W16x45 DCR = 0.97 $\Delta_L = 0.31'' = L/855$

w/ Brace @ P W16x31 DCR = 0.76 $\Delta_L = 0.48'' = L/547$

$R_U = 24.5k$

↳ Use W16x36

kpff Consulting Engineers, Portland, Oregon	Project Galleria	By JDB	Sheet No. 9
	Location	Date	
	Client	Revised	Job No.
		Date	

B4

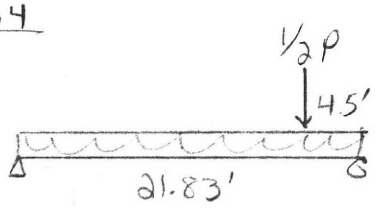

$w = (4.5/2 + 1')\ 87\ psf = 283\ plf$ (or 5.5/2)

" $150\ psf = 488\ plf$

$1/2\ P = 1.05\ k$

w/ unbraced	W16x36	DCR = 0.74	$\Delta_L = 0.21'' = L/1250$
w/ Braced @ 10' of P	W14x22	DCR = 0.66	$\Delta_L = 0.47'' = L/555$

Use W16x26 $\qquad R_u = 13.4\ k$

B5

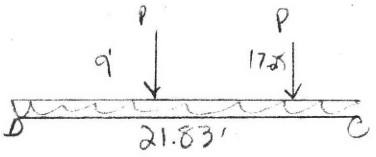

$w = B4 = 283\ plf$

$L = $ " $= 488\ plf$

w/ unbraced	W16x36	DCR = 0.97	$\Delta_L = 0.29'' = L/917$
w/ Braced @ P	W16x26	DCR = 0.68	$\Delta_L = 0.43'' = L/616$

$R_u = 16.6\ k$

B6

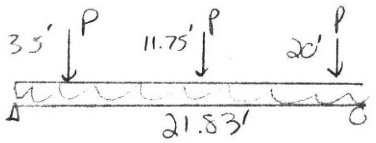

$w = B5$

w/ unbraced	W16x36	DCR = 1.0	$\Delta_L = 0.30'' = L/887$
w/ Braced @ P	W16x26	DCR = 0.67	$\Delta_L = 0.43'' = L/596$

$R_u = 18\ k$

B7

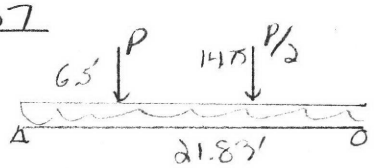

$w = B5$

w/ unbraced	W16x36	DCR = 0.91	$\Delta_L = 0.27'' = L/988$	
w/ Braced @ P	W16x26	DCR = 0.66	$\Delta_L = 0.40'' = L/664$	$R_u = 15.5\ k$

B8

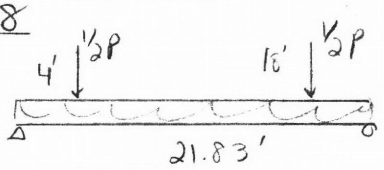

$w = 2.75' \cdot 87psf = 240plf$
$L = " \cdot 150psf = 413plf$

w/ unbraced W16x36 DCR = 0.70 $\Delta_L = 0.19" = L/1353$ $R_u = 12.5k$
↳ Not Control

B9

Sim to B4, But w/ 2x 1/2P
Unbraced W16x36 DCR = 0.79 $\Delta_L = 0.23" = L/1152$
w/ Braced @ 10' on P W14x22 DCR = 0.71 $\Delta_L = 0.51" = L/512$ $R_u = 14.6k$
↳ Use W16x26

B10 = B4

B11

Beam Supports 6" CMU Wall Above (w/ doors)
$DL = 63psf \cdot (3.67' \cdot 17.5') + 63psf \cdot (6'/2 + 3.33'/2) \cdot 10' = 7{,}000lb$
over 3.67' = $7k/3.67' = 1{,}907plf$
↳ Use 2000plf over full length

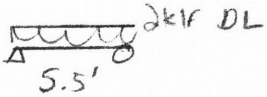

w/ W8x10 unbraced DCR = 0.34 $\Delta_D = L/1424$
$R_D = 5.5k$
$R_U = 7.8k$
↳ Use W12x16

B12

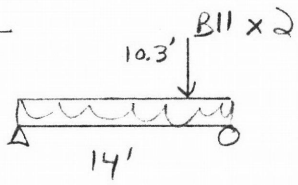

$DL = 5.46' \cdot 87psf + 150plf = 625plf$
$LL = " \cdot 150psf = 820plf$

w/ C12x25 full Load DCR = 0.81

↳ Use C15

$R_D = 6k$, 8.6k
$R_L = 5.7k$
$R_u = 16.4k$, 19.5k

$\Delta_L = 0.17" = L/991$

kpff Consulting Engineers, Portland, Oregon	Project Galleria	By JDB	Sheet No. 11
	Location	Date	
	Client	Revised	Job No.
		Date	

B13

Supports Baler = 6.7k / (3.83' · 5.83') = 300psf

↳ Assume Weight on long sides 5400lb + 1300lb bale

w = 300psf · 3.83'/2 = 575plf

L = 5.5' ~/ W8x10 unbraced DCR = 0.11 $\Delta_L = L/5000$

↳ Use W12x16 R_L = 1.6k

B14

Last 7' supported by (N) Conc wall below
supports Baler Also

↳ Ends up similar to B12

B15

x1.33 for remaining

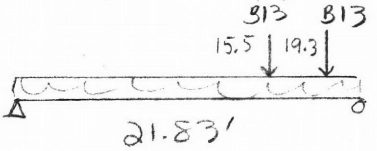

2·1.33·1.6k + 2·1.6k = 7.5k > 6.7k total

D = 5.46' · 87psf + 150plf = 625plf
L = " · 150psf = 820plf

~/ MC18x45.8 Full load DCR = 0.66 Δ_L = 0.30" = L/864

R_D = 7.4k, 7.5k
R_L = 9.8k, 12.4k

R_u = 24.5k, 28.8k

B16

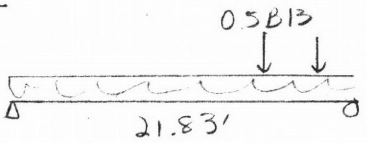

Sim to B15

~/ C15x33.9 Full Load DCR = 0.96 Δ_L = 0.5" = L/528

↳ Use MC18

R_D = 7.2k, 7.3k
R_L = 9.3k, 10.2k

R_u = 23.5k, 25.1k

B17

Beam added @ Longer Span Slab

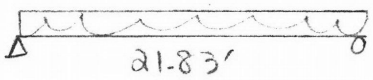

$D = 87\,psf \cdot \left(\frac{5.5'}{2} + \frac{4.3'}{2}\right) = 427\,plf$
$L = 150\,psf \cdot \quad '' \quad = 735\,plf$

w/ unbraced W16x36 DCR: 1.0 $\Delta_L = 0.26''$

w/ Braced @ 3rd Points W16x26 DCR = 0.71 $\Delta_L = 0.39'' = L/655$

$R_D = 4.85k$ $R_U = 18.3k$
$R_L = 7.85k$

B18

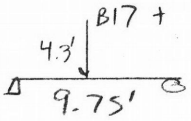

w/ 16x26 unbraced DCR = 0.44 $R_U = 16k$

B19

Typical Concrete Joist

↳ See Original Calcs, Pg A221

B20

Concrete joist w/ reduced tributary area

$\frac{2.5'}{2} + \frac{5.46'}{2} = 4'$ or $\frac{3.6'}{2} + \frac{4.5'}{2} = 4.05'$

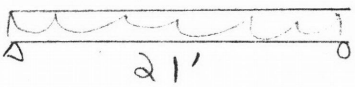

$D = 87\,psf \cdot 4.05' + 150\,plf = 502\,plf$
$L = 150\,psf \cdot 4.05' = 608\,plf$

V

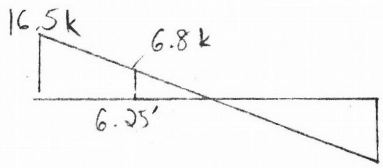

⇒ From Typ Shear Capacity Diagram
↳ $V_U < \frac{1}{2}\phi V_C$ ∴ Ok

$M_U = 1{,}042$ k-in $< 1{,}330$ k-in ⇒ No Reinf Req'd B2

Gravity Beam Design

RAM SBeam v5.0
Galleria
B1

13

04/16/12 16:40:31

STEEL CODE: AISC 360-05 LRFD

SPAN INFORMATION (ft): I-End (0.00,0.00) J-End (15.33,0.00)

Beam Size (User Selected) = C12X25 Fy = 36.0 ksi
Total Beam Length (ft) = 15.33
Mp (kip-ft) = 88.20
Top flange braced by decking.

LINE LOADS (k/ft):

Load	Dist (ft)	DL	LL
1	0.000	0.025	0.000
	15.330	0.025	0.000
2	0.000	0.625	0.820
	15.330	0.625	0.820

SHEAR (Ultimate): Max Vu (1.2DL+1.6LL) = 16.03 kips 0.90Vn = 90.28 kips

MOMENTS (Ultimate):

Span	Cond	LoadCombo	Mu kip-ft	@ ft	Lb ft	Cb	Phi	Phi*Mn kip-ft
Center	Max +	1.2DL+1.6LL	61.5	7.7	0.0	1.00	0.90	79.38
Controlling		1.2DL+1.6LL	61.5	7.7	0.0	1.00	0.90	79.38

REACTIONS (kips):

	Left	Right
DL reaction	4.98	4.98
Max +LL reaction	6.29	6.29
Max +total reaction (factored)	16.03	16.03

DEFLECTIONS:

Dead load (in)	at	7.66 ft	=	-0.193	L/D	=	951
Live load (in)	at	7.66 ft	=	-0.244	L/D	=	754
Net Total load (in)	at	7.66 ft	=	-0.437	L/D	=	421

Gravity Beam Design

RAM SBeam v5.0
Galleria
B2

14

04/16/12 17:20:15

STEEL CODE: AISC 360-05 LRFD

SPAN INFORMATION (ft): I-End (0.00,0.00) J-End (10.90,0.00)

Beam Size (User Selected) = C12X25 Fy = 36.0 ksi
Total Beam Length (ft) = 10.90
Mp (kip-ft) = 88.20
Top flange braced by decking.

POINT LOADS (kips):

			Flange Bracing	
Dist (ft)	DL	LL	Top	Bottom
5.460	5.00	6.30	No	No

LINE LOADS (k/ft):

Load	Dist (ft)	DL	LL
1	0.000	0.025	0.000
	10.900	0.025	0.000
2	0.000	0.433	0.488
	10.900	0.433	0.488

SHEAR (Ultimate): Max Vu (1.2DL+1.6LL) = 15.31 kips 0.90Vn = 90.28 kips

MOMENTS (Ultimate):

Span	Cond	LoadCombo	Mu kip-ft	@ ft	Lb ft	Cb	Phi	Phi*Mn kip-ft
Center	Max +	1.2DL+1.6LL	63.6	5.5	0.0	1.00	0.90	79.38
Controlling		1.2DL+1.6LL	63.6	5.5	0.0	1.00	0.90	79.38

REACTIONS (kips):

	Left	**Right**
DL reaction	4.99	5.00
Max +LL reaction	5.80	5.82
Max +total reaction (factored)	15.28	15.31

DEFLECTIONS:

Dead load (in)	at	5.45 ft	=	-0.091	L/D	=	1443
Live load (in)	at	5.45 ft	=	-0.107	L/D	=	1217
Net Total load (in)	at	5.45 ft	=	-0.198	L/D	=	660

Gravity Beam Design

RAM SBeam v5.0
Galleria
B3 Braced

15

04/16/12 17:22:05

STEEL CODE: AISC 360-05 LRFD

SPAN INFORMATION (ft): I-End (0.00,0.00) J-End (21.83,0.00)

Beam Size (User Selected) = W16X31 Fy = 50.0 ksi
Total Beam Length (ft) = 21.83
Mp (kip-ft) = 225.00
Top flange not braced by decking.

POINT LOADS (kips):

			Flange Bracing	
Dist (ft)	DL	LL	Top	Bottom
3.500	0.00	2.10	Yes	No
11.750	0.00	2.10	Yes	No
20.000	0.00	2.10	Yes	No
15.330	5.00	5.80	No	No

LINE LOADS (k/ft):

Load	Dist (ft)	DL	LL
1	0.000	0.031	0.000
	21.830	0.031	0.000
2	0.000	0.283	0.488
	15.330	0.283	0.488
3	15.330	0.087	0.150
	21.830	0.087	0.150

SHEAR (Ultimate): Max Vu (1.2DL+1.6LL) = 24.50 kips 1.00Vn = 131.18 kips

MOMENTS (Ultimate):

Span	Cond	LoadCombo	Mu kip-ft	@ ft	Lb ft	Cb	Phi	Phi*Mn kip-ft
Center	Max +	1.2DL+1.6LL	140.4	12.4	8.3	1.15	0.90	184.66
Controlling		1.2DL+1.6LL	140.4	12.4	8.3	1.15	0.90	184.66

REACTIONS (kips):

	Left	**Right**
DL reaction	4.73	5.85
Max +LL reaction	9.64	10.92
Max +total reaction (factored)	21.09	24.50

DEFLECTIONS:

Dead load (in)	at	11.35 ft	=	-0.265	L/D	=	987
Live load (in)	at	11.24 ft	=	-0.479	L/D	=	547
Net Total load (in)	at	11.24 ft	=	-0.744	L/D	=	352

Gravity Beam Design

RAM SBeam v5.0
Galleria
B4 Braced

16

04/17/12 08:04:12

STEEL CODE: AISC 360-05 LRFD

SPAN INFORMATION (ft): I-End (0.00,0.00) J-End (21.83,0.00)

Beam Size (Optimum) = W14X22 Fy = 50.0 ksi
Total Beam Length (ft) = 21.83
Mp (kip-ft) = 138.33
Top flange not braced by decking.

USER DEFINED FLANGE BRACE POINTS:

Dist (ft)	Top	Bottom
10.00	Yes	No

POINT LOADS (kips):

			Flange Bracing	
Dist (ft)	DL	LL	Top	Bottom
17.330	0.00	1.05	Yes	No

LINE LOADS (k/ft):

Load	Dist (ft)	DL	LL
1	0.000	0.022	0.000
	21.833	0.022	0.000
2	0.000	0.238	0.488
	21.833	0.238	0.488

SHEAR (Ultimate): Max Vu (1.2DL+1.6LL) = 13.26 kips 1.00Vn = 94.53 kips

MOMENTS (Ultimate):

Span	Cond	LoadCombo	Mu kip-ft	@ ft	Lb ft	Cb	Phi	Phi*Mn kip-ft
Center	Max +	1.2DL+1.6LL	69.0	11.2	7.3	1.05	0.90	103.55
Controlling		1.2DL+1.6LL	69.0	11.2	7.3	1.05	0.90	103.55

REACTIONS (kips):

	Left	**Right**
DL reaction	2.84	2.84
Max +LL reaction	5.54	6.16
Max +total reaction (factored)	12.28	13.26

DEFLECTIONS:

Dead load (in)	at	10.92 ft	=	-0.230	L/D	=	1137
Live load (in)	at	11.03 ft	=	-0.472	L/D	=	555
Net Total load (in)	at	11.03 ft	=	-0.703	L/D	=	373

Gravity Beam Design

RAM SBeam v5.0
Galleria
B5 Braced

17

04/16/12 18:02:03

STEEL CODE: AISC 360-05 LRFD

SPAN INFORMATION (ft): I-End (0.00,0.00) J-End (21.83,0.00)

Beam Size (User Selected) = W16X26 Fy = 50.0 ksi
Total Beam Length (ft) = 21.83
Mp (kip-ft) = 184.17
Top flange not braced by decking.

POINT LOADS (kips):

			Flange Bracing	
Dist (ft)	DL	LL	Top	Bottom
9.000	0.00	2.10	Yes	No
17.250	0.00	2.10	Yes	No

LINE LOADS (k/ft):

Load	Dist (ft)	DL	LL
1	0.000	0.026	0.000
	21.833	0.026	0.000
2	0.000	0.283	0.488
	21.833	0.283	0.488

SHEAR (Ultimate): Max Vu (1.2DL+1.6LL) = 16.61 kips 0.90Vn = 105.97 kips

MOMENTS (Ultimate):

Span	Cond	LoadCombo	Mu kip-ft	@ ft	Lb ft	Cb	Phi	Phi*Mn kip-ft
Center	Max +	1.2DL+1.6LL	91.6	10.3	8.3	1.06	0.90	134.26
Controlling		1.2DL+1.6LL	91.6	10.3	8.3	1.06	0.90	134.26

REACTIONS (kips):

	Left	**Right**
DL reaction	3.37	3.37
Max +LL reaction	7.00	7.85
Max +total reaction (factored)	15.25	16.61

DEFLECTIONS:

Dead load (in)	at	10.92 ft	=	-0.181	L/D	=	1447
Live load (in)	at	10.92 ft	=	-0.425	L/D	=	616
Net Total load (in)	at	10.92 ft	=	-0.607	L/D	=	432

Gravity Beam Design

RAM SBeam v5.0
Galleria
B6 Braced

18

04/16/12 18:02:10

STEEL CODE: AISC 360-05 LRFD

SPAN INFORMATION (ft): I-End (0.00,0.00) J-End (21.83,0.00)

Beam Size (User Selected) = W16X26 Fy = 50.0 ksi
Total Beam Length (ft) = 21.83
Mp (kip-ft) = 184.17
Top flange not braced by decking.

POINT LOADS (kips):

			Flange Bracing	
Dist (ft)	DL	LL	Top	Bottom
3.500	0.00	2.10	Yes	No
11.750	0.00	2.10	Yes	No
20.000	0.00	2.10	Yes	No

LINE LOADS (k/ft):

Load	Dist (ft)	DL	LL
1	0.000	0.026	0.000
	21.833	0.026	0.000
2	0.000	0.283	0.488
	21.833	0.283	0.488

SHEAR (Ultimate): Max Vu (1.2DL+1.6LL) = 18.00 kips 0.90Vn = 105.97 kips

MOMENTS (Ultimate):

Span	Cond	LoadCombo	Mu kip-ft	@ ft	Lb ft	Cb	Phi	Phi*Mn kip-ft
Center	Max +	1.2DL+1.6LL	95.2	11.8	8.3	1.12	0.90	142.39
Controlling		1.2DL+1.6LL	95.2	11.8	8.3	1.12	0.90	142.39

REACTIONS (kips):

	Left	**Right**
DL reaction	3.37	3.37
Max +LL reaction	8.24	8.72
Max +total reaction (factored)	17.23	18.00

DEFLECTIONS:

Dead load (in)	at	10.92 ft	=	-0.181	L/D	=	1447
Live load (in)	at	10.92 ft	=	-0.440	L/D	=	596
Net Total load (in)	at	10.92 ft	=	-0.621	L/D	=	422

Gravity Beam Design

RAM SBeam v5.0
Galleria
B7 Braced

04/16/12 18:02:20

STEEL CODE: AISC 360-05 LRFD

SPAN INFORMATION (ft): I-End (0.00,0.00) J-End (21.83,0.00)

Beam Size (User Selected) = W16X26 Fy = 50.0 ksi
Total Beam Length (ft) = 21.83
Mp (kip-ft) = 184.17
Top flange not braced by decking.

POINT LOADS (kips):

Dist (ft)	DL	LL	Flange Bracing Top	Flange Bracing Bottom
6.500	0.00	2.10	Yes	No
14.750	0.00	1.05	Yes	No

LINE LOADS (k/ft):

Load	Dist (ft)	DL	LL
1	0.000	0.026	0.000
	21.833	0.026	0.000
2	0.000	0.283	0.488
	21.833	0.283	0.488

SHEAR (Ultimate): Max Vu (1.2DL+1.6LL) = 15.48 kips 0.90Vn = 105.97 kips

MOMENTS (Ultimate):

Span	Cond	LoadCombo	Mu kip-ft	@ ft	Lb ft	Cb	Phi	Phi*Mn kip-ft
Center	Max +	1.2DL+1.6LL	85.6	10.5	8.3	1.01	0.90	129.03
Controlling		1.2DL+1.6LL	85.6	10.5	8.3	1.01	0.90	129.03

REACTIONS (kips):

	Left	**Right**
DL reaction	3.37	3.37
Max +LL reaction	7.14	6.66
Max +total reaction (factored)	15.48	14.71

DEFLECTIONS:

Dead load (in)	at	10.92 ft	=	-0.181	L/D	=	1447
Live load (in)	at	10.81 ft	=	-0.395	L/D	=	664
Net Total load (in)	at	10.81 ft	=	-0.576	L/D	=	455

Gravity Beam Design

RAM SBeam v5.0
Galleria
B9 Braced

20

04/17/12 08:08:29

STEEL CODE: AISC 360-05 LRFD

SPAN INFORMATION (ft): I-End (0.00,0.00) J-End (21.83,0.00)

Beam Size (Optimum) = W14X22 Fy = 50.0 ksi
Total Beam Length (ft) = 21.83
Mp (kip-ft) = 138.33
Top flange not braced by decking.

USER DEFINED FLANGE BRACE POINTS:

Dist (ft)	Top	Bottom
10.00	Yes	No

POINT LOADS (kips):

			Flange Bracing	
Dist (ft)	DL	LL	Top	Bottom
17.330	0.00	2.10	Yes	No

LINE LOADS (k/ft):

Load	Dist (ft)	DL	LL
1	0.000	0.022	0.000
	21.833	0.022	0.000
2	0.000	0.238	0.488
	21.833	0.238	0.488

SHEAR (Ultimate): Max Vu (1.2DL+1.6LL) = 14.60 kips 1.00Vn = 94.53 kips

MOMENTS (Ultimate):

Span	Cond	LoadCombo	Mu kip-ft	@ ft	Lb ft	Cb	Phi	Phi*Mn kip-ft
Center	Max +	1.2DL+1.6LL	72.9	11.6	7.3	1.04	0.90	102.33
Controlling		1.2DL+1.6LL	72.9	11.6	7.3	1.04	0.90	102.33

REACTIONS (kips):

	Left	**Right**
DL reaction	2.84	2.84
Max +LL reaction	5.76	6.99
Max +total reaction (factored)	12.62	14.60

DEFLECTIONS:

Dead load (in)	at	10.92 ft	=	-0.230	L/D	=	1137
Live load (in)	at	11.03 ft	=	-0.512	L/D	=	512
Net Total load (in)	at	11.03 ft	=	-0.742	L/D	=	353

Gravity Beam Design

RAM SBeam v5.0
Galleria
B11

21

04/17/12 08:16:12

STEEL CODE: AISC 360-05 LRFD

SPAN INFORMATION (ft): I-End (0.00,0.00) J-End (5.50,0.00)

Beam Size (Optimum) = W8X10 Fy = 50.0 ksi
Total Beam Length (ft) = 5.50
Mp (kip-ft) = 36.96
Top flange not braced by decking.

LINE LOADS (k/ft):

Load	Dist (ft)	DL	LL
1	0.000	0.010	0.000
	5.500	0.010	0.000
2	0.000	2.000	0.000
	5.500	2.000	0.000

SHEAR (Ultimate): Max Vu (1.4DL) = 7.74 kips 1.00Vn = 40.24 kips

MOMENTS (Ultimate):

Span	Cond	LoadCombo	Mu kip-ft	@ ft	Lb ft	Cb	Phi	Phi*Mn kip-ft
Center	Max +	1.4DL	10.6	2.8	5.5	1.14	0.90	31.23
Controlling		1.4DL	10.6	2.8	5.5	1.14	0.90	31.23

REACTIONS (kips):

	Left	**Right**
DL reaction	5.53	5.53
Max +total reaction (factored)	7.74	7.74

DEFLECTIONS:

Dead load (in)	at	2.75 ft	=	-0.046	L/D =	1424
Live load (in)	at	2.75 ft	=	-0.000		
Net Total load (in)	at	2.75 ft	=	-0.046	L/D =	1424

Gravity Beam Design

RAM SBeam v5.0
Galleria
B12

22

04/17/12 08:22:19

STEEL CODE: AISC 360-05 LRFD

SPAN INFORMATION (ft): I-End (0.00,0.00) J-End (14.00,0.00)

Beam Size (User Selected) = C12X25 Fy = 36.0 ksi
Total Beam Length (ft) = 14.00
Mp (kip-ft) = 88.20
Top flange braced by decking.

POINT LOADS (kips):

Dist (ft)	DL	LL	Flange Bracing Top	Flange Bracing Bottom
10.300	5.50	0.00	No	No

LINE LOADS (k/ft):

Load	Dist (ft)	DL	LL
1	0.000	0.025	0.000
	14.000	0.025	0.000
2	0.000	0.625	0.820
	14.000	0.625	0.820

SHEAR (Ultimate): Max Vu (1.2DL+1.6LL) = 19.50 kips 0.90Vn = 90.28 kips

MOMENTS (Ultimate):

Span	Cond	LoadCombo	Mu kip-ft	@ ft	Lb ft	Cb	Phi	Phi*Mn kip-ft
Center	Max +	1.2DL+1.6LL	64.2	7.8	0.0	1.00	0.90	79.38
Controlling		1.2DL+1.6LL	64.2	7.8	0.0	1.00	0.90	79.38

REACTIONS (kips):

	Left	**Right**
DL reaction	6.00	8.60
Max +LL reaction	5.74	5.74
Max +total reaction (factored)	16.39	19.50

DEFLECTIONS:

Dead load (in)	at	7.35 ft	=	-0.229	L/D =	735
Live load (in)	at	7.21 ft	=	-0.170	L/D =	991
Net Total load (in)	at	7.21 ft	=	-0.398	L/D =	422

Gravity Beam Design

RAM SBeam v5.0
Galleria
B15

23

04/17/12 08:46:15

STEEL CODE: AISC 360-05 LRFD

SPAN INFORMATION (ft): I-End (0.00,0.00) J-End (21.83,0.00)

Beam Size (User Selected) = MC18X45.8 Fy = 36.0 ksi
Total Beam Length (ft) = 21.83
Mp (kip-ft) = 237.60
Top flange braced by decking.

POINT LOADS (kips):

			Flange Bracing	
Dist (ft)	DL	LL	Top	Bottom
15.500	0.10	2.13	No	No
19.300	0.10	2.13	No	No

LINE LOADS (k/ft):

Load	Dist (ft)	DL	LL
1	0.000	0.046	0.000
	21.830	0.046	0.000
2	0.000	0.625	0.820
	21.830	0.625	0.820

SHEAR (Ultimate): Max Vu (1.2DL+1.6LL) = 28.73 kips 0.90Vn = 174.96 kips

MOMENTS (Ultimate):

Span	Cond	LoadCombo	Mu kip-ft	@ ft	Lb ft	Cb	Phi	Phi*Mn kip-ft
Center	Max +	1.2DL+1.6LL	142.2	11.6	0.0	1.00	0.90	213.84
Controlling		1.2DL+1.6LL	142.2	11.6	0.0	1.00	0.90	213.84

REACTIONS (kips):

	Left	**Right**
DL reaction	7.36	7.48
Max +LL reaction	9.81	12.35
Max +total reaction (factored)	24.54	28.73

DEFLECTIONS:

Dead load (in)	at	10.91 ft	=	-0.207	L/D =	1265
Live load (in)	at	11.02 ft	=	-0.303	L/D =	864
Net Total load (in)	at	11.02 ft	=	-0.510	L/D =	514

Gravity Beam Design

RAM SBeam v5.0
Galleria
B16

24

04/17/12 08:46:52

STEEL CODE: AISC 360-05 LRFD

SPAN INFORMATION (ft): I-End (0.00,0.00) J-End (21.83,0.00)

Beam Size (User Selected) = C15X33.9 Fy = 36.0 ksi
Total Beam Length (ft) = 21.83
Mp (kip-ft) = 152.40
Top flange braced by decking.

POINT LOADS (kips):

			Flange Bracing	
Dist (ft)	DL	LL	Top	Bottom
15.500	0.05	0.80	No	No
19.300	0.05	0.80	No	No

LINE LOADS (k/ft):

Load	Dist (ft)	DL	LL
1	0.000	0.034	0.000
	21.830	0.034	0.000
2	0.000	0.625	0.820
	21.830	0.625	0.820

SHEAR (Ultimate): Max Vu (1.2DL+1.6LL) = 25.09 kips 0.90Vn = 116.64 kips

MOMENTS (Ultimate):

Span	Cond	LoadCombo	Mu kip-ft	@ ft	Lb ft	Cb	Phi	Phi*Mn kip-ft
Center	Max +	1.2DL+1.6LL	131.3	11.2	0.0	1.00	0.90	137.16
Controlling		1.2DL+1.6LL	131.3	11.2	0.0	1.00	0.90	137.16

REACTIONS (kips):

	Left	**Right**
DL reaction	7.21	7.27
Max +LL reaction	9.27	10.23
Max +total reaction (factored)	23.50	25.09

DEFLECTIONS:

Dead load (in)	at	10.91 ft	=	-0.371	L/D =	706
Live load (in)	at	11.02 ft	=	-0.495	L/D =	529
Net Total load (in)	at	11.02 ft	=	-0.866	L/D =	302

Gravity Beam Design

RAM SBeam v5.0
Galleria
B17

25

04/17/12 08:54:45

STEEL CODE: AISC 360-05 LRFD

SPAN INFORMATION (ft): I-End (0.00,0.00) J-End (21.30,0.00)

Beam Size (User Selected) = W16X26 Fy = 50.0 ksi
Total Beam Length (ft) = 21.30
Mp (kip-ft) = 184.17
Top flange not braced by decking.

USER DEFINED FLANGE BRACE POINTS:

Dist (ft)	Top	Bottom
7.30	Yes	No
14.60	Yes	No

LINE LOADS (k/ft):

Load	Dist (ft)	DL	LL
1	0.000	0.026	0.000
	21.300	0.026	0.000
2	0.000	0.427	0.735
	21.300	0.427	0.735
3	0.000	0.000	0.000
	10.800	0.000	0.000
4	10.800	0.000	0.000
	21.300	0.000	0.000
5	0.000	0.000	0.000
	10.800	0.000	0.000
6	10.800	0.000	0.000
	21.300	0.000	0.000

SHEAR (Ultimate): Max Vu (1.2DL+1.6LL) = 18.32 kips 0.90Vn = 105.97 kips

MOMENTS (Ultimate):

Span	Cond	LoadCombo	Mu kip-ft	@ ft	Lb ft	Cb	Phi	Phi*Mn kip-ft
Center	Max +	1.2DL+1.6LL	97.5	10.7	7.3	1.01	0.90	137.78
Controlling		1.2DL+1.6LL	97.5	10.7	7.3	1.01	0.90	137.78

REACTIONS (kips):

	Left	Right
DL reaction	4.83	4.83
Max +LL reaction	7.83	7.83
Max +total reaction (factored)	18.32	18.32

DEFLECTIONS:

Dead load (in)	at	10.65 ft	=	-0.240	L/D	=	1063
Live load (in)	at	10.65 ft	=	-0.390	L/D	=	655
Net Total load (in)	at	10.65 ft	=	-0.630	L/D	=	405

Gravity Beam Design

RAM SBeam v5.0
Galleria
B18

26

04/17/12 09:06:54

STEEL CODE: AISC 360-05 LRFD

SPAN INFORMATION (ft): I-End (0.00,0.00) J-End (9.75,0.00)

Beam Size (User Selected) = W16X26 Fy = 50.0 ksi
Total Beam Length (ft) = 9.75
Mp (kip-ft) = 184.17
Top flange not braced by decking.

POINT LOADS (kips):

Dist (ft)	DL	LL	Flange Bracing Top	Flange Bracing Bottom
4.300	7.40	12.00	No	No

LINE LOADS (k/ft):

Load	Dist (ft)	DL	LL
1	0.000	0.026	0.000
	9.750	0.026	0.000

SHEAR (Ultimate): Max Vu (1.2DL+1.6LL) = 15.85 kips 0.90Vn = 105.97 kips

MOMENTS (Ultimate):

Span	Cond	LoadCombo	Mu kip-ft	@ ft	Lb ft	Cb	Phi	Phi*Mn kip-ft
Center	Max +	1.2DL+1.6LL	67.9	4.3	9.8	1.37	0.90	155.82
Controlling		1.2DL+1.6LL	67.9	4.3	9.8	1.37	0.90	155.82

REACTIONS (kips):

	Left	**Right**
DL reaction	4.26	3.39
Max +LL reaction	6.71	5.29
Max +total reaction (factored)	15.85	12.54

DEFLECTIONS:

Dead load (in)	at	4.68 ft	=	-0.028	L/D	=	4123
Live load (in)	at	4.68 ft	=	-0.045	L/D	=	2598
Net Total load (in)	at	4.68 ft	=	-0.073	L/D	=	1594

kpff Consulting Engineers, Portland, Oregon	Project	By	Sheet No. 27
	Location	Date	
	Client	Revised	Job No.
		Date	

Rack over New Slab

Grid E-F / 3-3.5

↳ Replaces Hollow Core Planks

Per Target 125 psf + Rack
or 175 psf

Check Slab

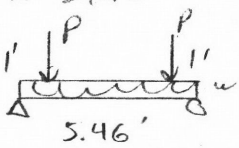

$w = 125\,psf$ or $175\,psf$

$P = 2.1\,k/2 = 1.05\,k$ or 0 (Rack Post Load)

$M = 13.2\,k\text{-}in$ or $7.83\,k\text{-}in$

w/ 3" 20GA + 3" N.W. $w_{super} = 342\,psf$

$M = wL^2/8 = 342 \cdot 5.46^2/8 \cdot 12/1000 = 15.3\,k\text{-}in$

↳ OK considering only 1' width / post

WF Beam

Per Target, 150 psf outside of racks

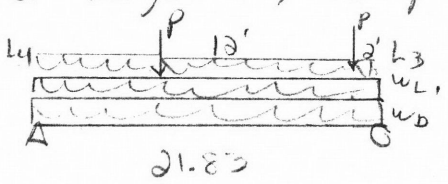

$w_D = 55\,psf_{slab} + 6\,psf_{steel} + 9\,psf_{misc} = 70\,psf$

$= 5.46' \cdot 70\,psf = 383\,plf$

$P = 1.1\,k$ Rack LL

$w_{L1} = 150\,psf \cdot 5.46/2 = 410\,plf$

$w_{L2} = w_{L1}$

$w_{L3} = 125\,psf \cdot 5.46'/2 = 341\,plf$

W10x30 [21]

DCR = 0.47

$\Delta_L = 0.27'' = L/968$

Gravity Beam Design

RAM SBeam v4.0
Galleria
Rack o Bale Storage A
Licensed to: RAM International

28

03/30/12 10:32:09

STEEL CODE: AISC360-05 LRFD

SPAN INFORMATION (ft): I-End (0.00,0.00) J-End (21.83,0.00)

Beam Size (User Selected) = W10X30 Fy = 50.0 ksi
Total Beam Length (ft) = 21.83
Distance to Adjacent Beam on Left (ft) = 8.0
Distance to Adjacent Edge on Right (ft) = 0.5

COMPOSITE PROPERTIES (Not Shored):

						Left	Right
Concrete thickness (in)						3.00	3.00
Unit weight concrete (pcf)						150.00	150.00
f'c (ksi)						3.00	3.00
Decking Orientation						perpendicular	perpendicular
Decking type						VERCO W3 Formlok	VERCO W3 Formlok
beff (in)	=	38.74	Y bar(in)	=	11.11		
Mnf (kip-ft)	=	303.02	Mn (kip-ft)	=	261.85		
C (kips)	=	172.30	PNA (in)	=	10.04		
Ieff (in4)	=	562.61	Itr (in4)	=	684.94		
Stud length (in)	=	4.50	Stud diam (in)	=	0.75		

Stud Capacity (kips) Qn = 17.2 Rg = 1.00 Rp = 0.60
# of studs: Max = 42 Partial = 12 Actual = 21
Number of Stud Rows = 1 Percent of Full Composite Action = 49.78
Top flange braced by decking.

POINT LOADS (kips):

Dist (ft)	DL	CDL	LL	CLL	Flange Bracing Top	Flange Bracing Bottom
7.830	0.00	0.00	1.10	0.00	No	No
19.830	0.00	0.00	1.10	0.00	No	No

LINE LOADS (k/ft):

Load	Dist (ft)	DL	CDL	LL	CLL
1	0.000	0.030	0.030	0.000	0.000
	21.830	0.030	0.030	0.000	0.000
2	0.000	0.383	0.230	0.820	0.100
	7.830	0.383	0.230	0.820	0.100
3	7.830	0.383	0.230	0.751	0.100
	21.830	0.383	0.230	0.751	0.100

SHEAR (Ultimate): Max Vu (1.2DL+1.6LL) = 20.91 kips 1.00Vn = 94.50 kips

MOMENTS (Ultimate):

Span	Cond	LoadCombo	Mu kip-ft	@ ft	Lb ft	Cb	Phi	Phi*Mn kip-ft
Center	PreCmp+	1.2DL+1.6LL	28.1	10.9	0.0	1.00	0.90	137.25
	Init DL	1.4DL	21.7	10.9	---	---		
	Max +	1.2DL+1.6LL	111.6	10.5	---	---	0.90	235.66
Controlling		1.2DL+1.6LL	111.6	10.5	---	---	0.90	235.66

Gravity Beam Design

RAM SBeam v4.0
Galleria
Rack o Bale Storage A
Licensed to: RAM International

03/30/12 10:32:09

REACTIONS (kips):

	Left	Right
Initial reaction	3.93	3.93
DL reaction	4.51	4.51
Max +LL reaction	9.45	9.69
Max +total reaction (factored)	20.53	20.91

DEFLECTIONS:

Initial load (in)	at	10.91 ft	=	-0.270	L/D	=	972
Live load (in)	at	10.91 ft	=	-0.271	L/D	=	968
Post Comp load (in)	at	10.91 ft	=	-0.319	L/D	=	822
Net Total load (in)	at	10.91 ft	=	-0.588	L/D	=	445

Pallet Stacker

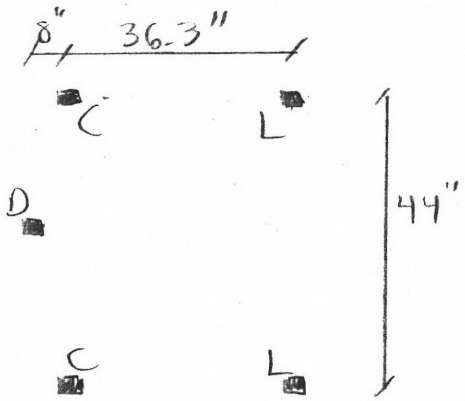

D = Drive Wheel = 535 lbs
C = Caster Wheel = 358 lbs EA
L = Load Wheels = 1,135 lbs EA

Pallet Capacity = 2,000 lbs

Unit = 1,455 lbs
Total = 3,455 lbs

Area ~ 44" · (36.3+8")
= 13.54 sf

P/A = 255 psf

w/ 8" Each Side
A = 25.1 sf

P/A = 138 psf

Check Slab for Point Loads

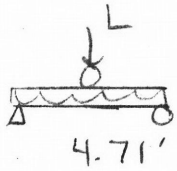

$w_D = 87$ psf

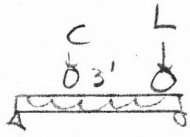

No LL Simultaneous

$V_u = 1.16$ k
$M_u = 29$ k-in w/ Simple

$V_L = 2.1$ k
$M_L = 12$ k-in

$\phi V_c = 2.7$ k/ft
$\phi M_n = 25.6$ k-in /ft

Some Fixity, OK

Punching Shear

Load wheels = 4" Ø x 2" d = 2.5"

b_o = = 4 · (2" + 2.5") = 18"

2" contact

P_u = 1.6 · 1.14k = 1.82k

$\phi V_c = 0.75 \cdot 4 \cdot \sqrt{3{,}500} \cdot 18'' \cdot 2.5'' = 7.9k$ ∴ OK

Crown Stacker

Pallet: 2,000 lbs W = 712 lb + 50 lb battery

w = 2,800 lbs

A = 58" · 18" = 7.3 psf P/A = 383 psf

w/ 8" Each Side A = 17.5 sf P/A = 160 psf

w/3 = 933 lbs / wheel < Stacker L = 1,135 lbs

or assume

Weight on back, full Pallet on front

= 1,000 lb / wheel

REVISED SIDEWALK REFRAMING CALCULATIONS

- The East sidewalk replacement (Grid J-K/7-10) was originally submitted as a dual layer system, with a 4" concrete sidewalk over 2" aggregate base on top of a structured slab.
    - Original Calculations (12/06/2011) Sheet A28-A33
- Additional calculations were submitted as part of the Transportation Development Checksheet dated 01/18/2012. KPFF calculations were dated 02/27/2012.
    - These calculations were for the dual layer system with a revised lift out vault lid location. The calculations were for removing all existing beams and adding new WF beams.
- The dual layer system was revised to a single layer system with the top of composite concrete slab as the sidewalk slab. PBOT has approved of this single layer system.
    - The following calculations are identical to the Transportation Development Checksheet calculations, with revisions or additions to show the existing steel WF beams are adequate.
        - Calculations for new beams worked for a 4" sidewalk slab, and are not recalculated for the reduced superimposed dead load.

kpff Consulting Engineers, Portland, Oregon	Project Galleria	By JDB	Sheet No. 33
	Location	Date 2/23/12	
	Client FFA	Revised	Job No. 210445.03
	Transportation Development	Date 4/20/12	

Sidewalk Reframing

Original Calculations, Page A28-A33

↳ Vault lid location changed ⇒ Update Calculations

* Lower all 6" For 2" Gravel 4" Sidewalk → Not Used

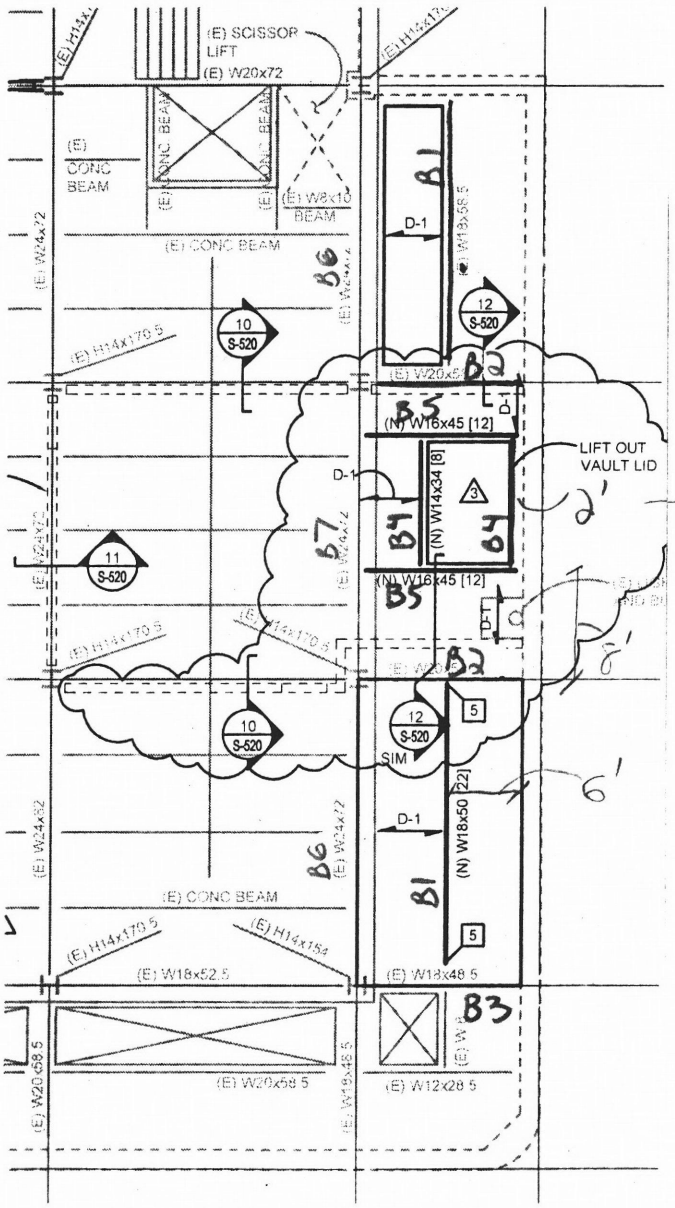

→ Revised Plan Shifting Lid West

kpff Consulting Engineers, Portland, Oregon	Project: Galleria	By: JDB	Sheet No. 33b
	Location	Date: 4/20/12	Job No.
	Client	Revised	
	Revised Sidewalk	Date	

- w/o 2 layer System

DL = 80psf − 70psf = 10psf superimposed

LL = 250psf or 8k Point Load

w/ 3" 18 GA + 3" N.W, 8' span = 342psf > 260psf ∴ OK

Point Load

$M_u = 1.2 \cdot (10psf + 55psf) \cdot 8^2/8 + 1.6 \cdot 8k \cdot 8'/4 / 3 = 9{,}160 \text{ lb-ft}$
$= 110 \text{ k-in}$

w/ $d = 6'' - 0.75''/2 = 5.63''$ #6 each flute

$a = 0.44 \cdot 60 / 0.85 \cdot 4 \cdot 12 = 0.647''$

$\phi M_n = 0.9 \cdot 60 \cdot 0.44 (5.63 - 0.65/2) = 126 \text{ k-in}$ ∴ OK

3" topping in lieu of prev. 4" topping

- Revised B1 for existing beam

DL = 10psf + 55psf = 65psf · 6' = 390plf

LL = 250psf · 6' = 1500plf

I = 883.6 in⁴
Z = 113.9 in³

(E) W18x58.5 ≙ W18x55 w/ F_y = 36ksi

DCR = 0.60 ∴ OK

R_D = 5k
R_L = 16.8k

↳ Keep existing W18 from Grid 7-8

- Revised B2 for existing beam

(E) W20 x 58.5 ≙ W21x57

I = 1176 in⁴
Z = 132.8 in³

DCR = 0.38 OK

↳ Keep Existing W20 @ Grid 8 & 9

Gravity Beam Design

RAM SBeam v5.01
Galleria
Sidewalk B1 - Existing

34

04/19/12 17:38:02

STEEL CODE: AISC 360-05 LRFD

SPAN INFORMATION (ft): I-End (0.00,0.00) J-End (22.33,0.00)

Beam Size (User Selected) = W18X55 Fy = 36.0 ksi
Total Beam Length (ft) = 22.33
Mp (kip-ft) = 336.00
Top flange braced by decking.

LINE LOADS (k/ft):

Load	Dist (ft)	DL	LL
1	0.000	0.055	0.000
	22.330	0.055	0.000
2	0.000	0.390	1.500
	22.330	0.390	1.500

SHEAR (Ultimate): Max Vu (1.2DL+1.6LL) = 32.76 kips 1.00Vn = 152.47 kips

MOMENTS (Ultimate):

Span	Cond	LoadCombo	Mu kip-ft	@ ft	Lb ft	Cb	Phi	Phi*Mn kip-ft
Center	Max +	1.2DL+1.6LL	182.9	11.2	0.0	1.00	0.90	302.40
Controlling		1.2DL+1.6LL	182.9	11.2	0.0	1.00	0.90	302.40

REACTIONS (kips):

	Left	Right
DL reaction	4.97	4.97
Max +LL reaction	16.75	16.75
Max +total reaction (factored)	32.76	32.76

DEFLECTIONS:

Dead load (in)	at	11.16 ft	=	-0.096	L/D	=	2777
Live load (in)	at	11.16 ft	=	-0.325	L/D	=	824
Net Total load (in)	at	11.16 ft	=	-0.422	L/D	=	636

Gravity Beam Design

RAM SBeam v5.01
Galleria
Sidewalk B2 Existing

35

04/19/12 18:02:57

STEEL CODE: AISC 360-05 LRFD

SPAN INFORMATION (ft): I-End (0.00,0.00) J-End (12.00,0.00)

Beam Size (User Selected) = W21X57 Fy = 36.0 ksi
Total Beam Length (ft) = 12.00
Mp (kip-ft) = 387.00
Top flange braced by decking.

POINT LOADS (kips):

Dist (ft)	DL	LL	Flange Bracing Top	Flange Bracing Bottom
6.000	5.00	16.75	Yes	No

LINE LOADS (k/ft):

Load	Dist (ft)	DL	LL
1	0.000	0.057	0.000
	12.000	0.057	0.000
2	0.000	0.260	1.000
	12.000	0.260	1.000

SHEAR (Ultimate): Max Vu (1.2DL+1.6LL) = 28.28 kips 1.00Vn = 184.58 kips

MOMENTS (Ultimate):

Span	Cond	LoadCombo	Mu kip-ft	@ ft	Lb ft	Cb	Phi	Phi*Mn kip-ft
Center	Max +	1.2DL+1.6LL	134.0	6.0	0.0	1.00	0.90	348.30
Controlling		1.2DL+1.6LL	134.0	6.0	0.0	1.00	0.90	348.30

REACTIONS (kips):

	Left	**Right**
DL reaction	4.40	4.40
Max +LL reaction	14.37	14.37
Max +total reaction (factored)	28.28	28.28

DEFLECTIONS:

Dead load (in)	at	6.00 ft	=	-0.014	L/D =	10648
Live load (in)	at	6.00 ft	=	-0.044	L/D =	3239
Net Total load (in)	at	6.00 ft	=	-0.058	L/D =	2483

Composite Deck

Worst Case = 8' Simple Span

Superimposed DL = 2" Gravel + 4" Conc + Misc + MEP
20 psf + 50 4 6

DL = 80 psf

LL = 250 psf or 8k Point Load

w/ 3" 18 GA + 4" NW, Allowable Superimposed = 400 psf
80 + 250 = 330 psf ∴ OK

w/ Point Load, Spread over 3'

$M_u = 1.2(80psf + 66psf) \cdot 8^2/8 + 1.6 \cdot 8{,}000lb \cdot 8'/4/3 = 9{,}935\ lb\text{-}ft = 119\ k\text{-}in$

d = 6.19" w/ #5 @ 12"

$a = 0.31 \cdot 60 / 0.85 \cdot 4 \cdot 12 = 0.46"$

$\phi M_n = 0.9 \cdot 60\ ksi \cdot 0.31 in^2 \cdot (6.19 - 0.46/2) = 100\ k\text{-}in$

w/ #6 a = 0.65" $\phi M_n = 145$ k-in ∴ OK

B1

DL = 80 psf + 57 psf = 137 psf DL = 825 plf CDL = 345 plf

LL = 250 psf Trib = 6' LL = 1,500 plf CLL = 120 plf

Span = 22.33'

W18x50 [22] DCR = 0.39

$R_D = 9.77k$
R_{CD} 3.88 k
$R_L = 16.75k$
$R_{CL} = 1.34k$

$M_L = 250psf \cdot 6' \cdot 22.33^2/8 = 93.5\ k\text{-}ft$

$M_{L,point} = 8k\ 22.33/4 = 44.7\ k\text{-}ft$

↳ Distributed Controls

$R_L = 38.5k$

kpff Consulting Engineers, Portland, Oregon	Project Galleria	By JDB	Sheet No. 37
	Location	Date	
	Client	Revised	Job No.
		Date 4/30/12	

~~B2~~

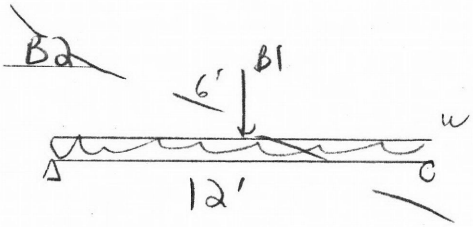

$w = 8'/2 \cdot 137psf = 550plf$
$L = 4' \cdot 250psf = 1{,}000plf$

$CDL = 230plf$
$CLL = 80plf$

W18x40 [12] DCR = 0.40 $R_u = 33k$

Keep Existing

B3

(E) I18x48.5
$I = 801.3 in^4$
$Z = 100.1 in^3$

W18x50
$I = 800 in^4$
$Z = 101 in^3$

$f_y = 36ksi$, non composite

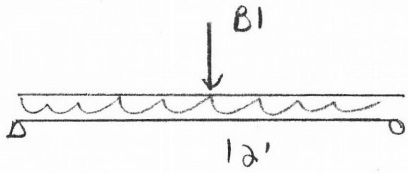

w Trib = 3.5'

$w_D = 3.5' \cdot 137psf = 480plf$
$L = \text{"} \cdot 250psf = 875plf$

W18x50, 36ksi DCR = 0.56 $R_u = 31.5k$

B4

$L = 9.5'$
$Trib = 4.5'/2 + 6.5'/2 = 5.5'$

$DL = 157psf \cdot 5.5' + 150plf\ curb = 1.02\ klf$
$LL = 250psf\ 5.5' = 1.38$

W14x34 DCR = 0.20 $R_D = 5k$
$R_L = 6.55k$

$R_u = 16.5k$

B5

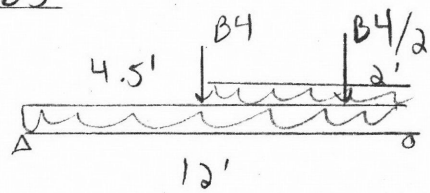

Trib = 8'/2

DL = 4' · 137 psf = 550 plf
LL = 4' · 250 psf = 1,000 plf

Curb - 150 plf

W16x36

DCR = 0.38

R_D = 7.1k
R_L = 10.6k

R_L = 27k

B6

(E) I 24x72

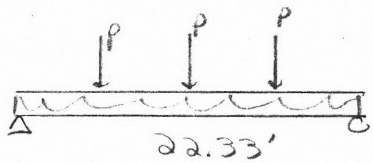

w = 6'/2 · 137 psf + 250 plf curb + 15' · 12 psf window

w_D = 841 plf
w_L = 3' · 250 psf = 750 plf

P Trib = 22.33'/2 · 22.33'/4 = 62.3 sf

D = 113 psf = 7.05k
L = 100 psf = 6.23k

w/ W24x76, 36ksi

DCR = 0.65

R_L = 53.3k

OK

B7

Sim to B6, OK

Gravity Beam Design

RAM SBeam v4.0
Galleria
Sidewalk B1
Licensed to: RAM International

39

02/23/12 17:05:17

STEEL CODE: AISC360-05 LRFD

SPAN INFORMATION (ft): I-End (0.00,0.00) J-End (22.33,0.00)

Beam Size (User Selected) = W18X50 Fy = 50.0 ksi
Total Beam Length (ft) = 22.33
Distance to Adjacent Beam on Left (ft) = 6.0
Distance to Adjacent Beam on Right (ft) = 6.0

COMPOSITE PROPERTIES (Not Shored):

		Left			**Right**
Concrete thickness (in)		3.00			3.00
Unit weight concrete (pcf)		150.00			150.00
f'c (ksi)		4.00			4.00
Decking Orientation		perpendicular			perpendicular
Decking type		VERCO W3 Formlok			VERCO W3 Formlok
beff (in)	=	66.99	Y bar(in)	=	17.69
Mnf (kip-ft)	=	807.34	Mn (kip-ft)	=	609.75
C (kips)	=	189.53	PNA (in)	=	14.34
Ieff (in4)	=	1718.90	Itr (in4)	=	2544.77
Stud length (in)	=	4.50	Stud diam (in)	=	0.75

Stud Capacity (kips) Qn = 17.2 Rg = 1.00 Rp = 0.60
# of studs: Max = 44 Partial = 20 Actual = 22
Number of Stud Rows = 1 Percent of Full Composite Action = 27.74
Top flange braced by decking.

LINE LOADS (k/ft):

Load	Dist (ft)	DL	CDL	LL	CLL
1	0.000	0.050	0.050	0.000	0.000
	22.330	0.050	0.050	0.000	0.000
2	0.000	0.825	0.345	1.500	0.120
	22.330	0.825	0.345	1.500	0.120

SHEAR (Ultimate): Max Vu (1.2DL+1.6LL) = 38.52 kips 1.00Vn = 191.70 kips

MOMENTS (Ultimate):

Span	Cond	LoadCombo	Mu kip-ft	@ ft	Lb ft	Cb	Phi	Phi*Mn kip-ft
Center	PreCmp+	1.2DL+1.6LL	41.5	11.2	0.0	1.00	0.90	378.75
	Init DL	1.4DL	34.5	11.2	---	---		
	Max +	1.2DL+1.6LL	215.0	11.2	---	---	0.90	548.77
Controlling		1.2DL+1.6LL	215.0	11.2	---	---	0.90	548.77

REACTIONS (kips):

	Left	**Right**
Initial reaction	5.75	5.75
DL reaction	9.77	9.77
Max +LL reaction	16.75	16.75
Max +total reaction (factored)	38.52	38.52

Gravity Beam Design

DEFLECTIONS:

Initial load (in)	at	11.16 ft	=	-0.095	L/D	=	2813
Live load (in)	at	11.16 ft	=	-0.168	L/D	=	1592
Post Comp load (in)	at	11.16 ft	=	-0.222	L/D	=	1206
Net Total load (in)	at	11.16 ft	=	-0.317	L/D	=	844

Gravity Beam Design

RAM SBeam v4.0
Galleria
Sidewalk B3
Licensed to: RAM International

41

02/23/12 17:31:48

STEEL CODE: AISC360-05 LRFD

SPAN INFORMATION (ft): I-End (0.00,0.00) J-End (12.00,0.00)

Beam Size (User Selected) = W18X50 Fy = 36.0 ksi
Total Beam Length (ft) = 12.00
Mp (kip-ft) = 303.00
Top flange braced by decking.

POINT LOADS (kips):

Dist (ft)	DL	LL	Flange Bracing Top	Flange Bracing Bottom
6.000	9.77	16.75	Yes	No

LINE LOADS (k/ft):

Load	Dist (ft)	DL	LL
1	0.000	0.050	0.000
	12.000	0.050	0.000
2	0.000	0.480	0.875
	12.000	0.480	0.875

SHEAR (Ultimate): Max Vu (1.2DL+1.6LL) = 31.48 kips 1.00Vn = 138.02 kips

MOMENTS (Ultimate):

Span	Cond	LoadCombo	Mu kip-ft	@ ft	Lb ft	Cb	Phi	Phi*Mn kip-ft
Center	Max +	1.2DL+1.6LL	152.2	6.0	0.0	1.00	0.90	272.70
Controlling		1.2DL+1.6LL	152.2	6.0	0.0	1.00	0.90	272.70

REACTIONS (kips):

	Left	**Right**
DL reaction	8.07	8.07
Max +LL reaction	13.62	13.62
Max +total reaction (factored)	31.48	31.48

DEFLECTIONS:

Dead load (in)	at	6.00 ft	=	-0.037	L/D =	3907
Live load (in)	at	6.00 ft	=	-0.063	L/D =	2304
Net Total load (in)	at	6.00 ft	=	-0.099	L/D =	1449

Gravity Beam Design

RAM SBeam v4.0
Galleria
Sidewalk B4
Licensed to: RAM International

42

02/24/12 10:35:03

STEEL CODE: AISC360-05 LRFD

SPAN INFORMATION (ft): I-End (0.00,0.00) J-End (9.50,0.00)

Beam Size (User Selected) = W14X34 Fy = 50.0 ksi
Total Beam Length (ft) = 9.50
Mp (kip-ft) = 227.50
Top flange braced by decking.

LINE LOADS (k/ft):

Load	Dist (ft)	DL	LL
1	0.000	0.034	0.000
	9.500	0.034	0.000
2	0.000	1.020	1.380
	9.500	1.020	1.380

SHEAR (Ultimate): Max Vu (1.2DL+1.6LL) = 16.50 kips 1.00Vn = 119.70 kips

MOMENTS (Ultimate):

Span	Cond	LoadCombo	Mu kip-ft	@ ft	Lb ft	Cb	Phi	Phi*Mn kip-ft
Center	Max +	1.2DL+1.6LL	39.2	4.8	0.0	1.00	0.90	204.75
Controlling		1.2DL+1.6LL	39.2	4.8	0.0	1.00	0.90	204.75

REACTIONS (kips):

	Left	**Right**
DL reaction	5.01	5.01
Max +LL reaction	6.55	6.55
Max +total reaction (factored)	16.50	16.50

DEFLECTIONS:

Dead load (in)	at	4.75 ft	=	-0.020	L/D =	5819
Live load (in)	at	4.75 ft	=	-0.026	L/D =	4445
Net Total load (in)	at	4.75 ft	=	-0.045	L/D =	2520

Gravity Beam Design

RAM SBeam v4.0
Galleria
Sidewalk B5
Licensed to: RAM International

43

02/24/12 10:36:56

STEEL CODE: AISC360-05 LRFD

SPAN INFORMATION (ft): I-End (0.00,0.00) J-End (12.00,0.00)

Beam Size (User Selected) = W16X36 Fy = 50.0 ksi
Total Beam Length (ft) = 12.00
Mp (kip-ft) = 266.67
Top flange braced by decking.

POINT LOADS (kips):

			Flange Bracing	
Dist (ft)	DL	LL	Top	Bottom
4.500	5.00	6.55	No	No
10.000	2.50	3.26	No	No

LINE LOADS (k/ft):

Load	Dist (ft)	DL	LL
1	0.000	0.036	0.000
	12.000	0.036	0.000
2	0.000	0.550	1.000
	12.000	0.550	1.000

SHEAR (Ultimate): Max Vu (1.2DL+1.6LL) = 26.85 kips 1.00Vn = 140.71 kips

MOMENTS (Ultimate):

Span	Cond	LoadCombo	Mu kip-ft	@ ft	Lb ft	Cb	Phi	Phi*Mn kip-ft
Center	Max +	1.2DL+1.6LL	91.4	4.5	0.0	1.00	0.90	240.00
Controlling		1.2DL+1.6LL	91.4	4.5	0.0	1.00	0.90	240.00

REACTIONS (kips):

	Left	**Right**
DL reaction	7.06	7.47
Max +LL reaction	10.64	11.17
Max +total reaction (factored)	25.49	26.85

DEFLECTIONS:

Dead load (in)	at	5.88 ft	=	-0.049	L/D =	2956
Live load (in)	at	5.88 ft	=	-0.072	L/D =	1997
Net Total load (in)	at	5.88 ft	=	-0.121	L/D =	1192

Gravity Beam Design

RAM SBeam v4.0
Galleria
Sidewalk B6
Licensed to: RAM International

44

02/23/12 17:57:02

STEEL CODE: AISC360-05 LRFD

SPAN INFORMATION (ft): I-End (0.00,0.00) J-End (22.33,0.00)

Beam Size (User Selected) = W24X76 Fy = 36.0 ksi
Total Beam Length (ft) = 22.33
Mp (kip-ft) = 600.00

POINT LOADS (kips):

Dist (ft)	DL	LL	Flange Bracing Top	Flange Bracing Bottom
5.580	7.05	6.23	Yes	No
11.160	7.05	6.23	Yes	No
16.740	7.05	6.23	Yes	No

LINE LOADS (k/ft):

Load	Dist (ft)	DL	LL
1	0.000	0.076	0.000
	22.330	0.076	0.000
2	0.000	0.840	0.750
	22.330	0.840	0.750

SHEAR (Ultimate): Max Vu (1.2DL+1.6LL) = 53.33 kips 1.00Vn = 227.15 kips

MOMENTS (Ultimate):

Span	Cond	LoadCombo	Mu kip-ft	@ ft	Lb ft	Cb	Phi	Phi*Mn kip-ft
Center	Max +	1.2DL+1.6LL	349.1	11.2	5.6	1.09	0.90	540.00
Controlling		1.2DL+1.6LL	349.1	11.2	5.6	1.09	0.90	540.00

REACTIONS (kips):

	Left	Right
DL reaction	20.81	20.80
Max +LL reaction	17.72	17.71
Max +total reaction (factored)	53.33	53.30

DEFLECTIONS:

Dead load (in)	at	11.16 ft	=	-0.194	L/D =	1378
Live load (in)	at	11.16 ft	=	-0.166	L/D =	1611
Net Total load (in)	at	11.16 ft	=	-0.361	L/D =	743

Connection To (E) Concrete

B1 $R_u = 39k$
B2 $R_u = 33k$
B5 $R_u = 27k$

(E) Connections

Wall = 1'-6" @ Top $f'_c = 3.5$ ksi

Use (6) 1"Ø Epoxied Rods x 10" Embed

DCR = 0.96 w/ cracked concrete

w/ 39k

Ledger

$w = 3' \cdot (1.2 \cdot 137 psf + 1.6 \cdot 250 psf) = 1.7$ k/f

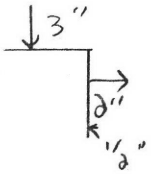

$V_u = 1.7$ k/ft @ 16" = 2.27k

$T_u = 1.7k \cdot 3''/2 = 2.55$ k/ft $T_u = 3.4k$

5/8"Ø Epoxied Rods w/ 5" Embed @ 16" DCR = 0.57

Company:		Page:	1
Specifier:		Project:	
Address:		Sub-Project I Pos. No.:	
Phone I Fax:	- | -	Date:	2/23/2012
E-Mail:			

Specifier's comments:

Input data

Anchor type and diameter:	**HIT-RE 500-SD + HAS, 1**
Effective embedment depth:	$h_{ef,act}$ = 10.000 in. ($h_{ef,limit}$ = - in.)
Material:	ASTM F 568M Class 5.8
Evaluation Service Report::	ESR 2322
Issued I Valid:	4/1/2010 | 4/1/2012
Proof:	design method ACI 318 / AC308
Stand-off installation:	e_b = 0.000 in. (no stand-off); t = 0.500 in.
Anchor plate:	l_x x l_y x t = 24.000 x 18.000 x 0.500 in. (Recommended plate thickness: not calculated)
Profile	S shape (AISC); (L x W x T x FT) = 3.000 in. x 2.330 in. x 0.170 in. x 0.260 in.
Base material:	cracked concrete , , f_c' = 3500 psi; h = 19.000 in., Temp. short/long: 32/32°F
Installation:	hammer drilled hole, installation condition: dry
Reinforcement:	tension: condition B, shear: condition B; no supplemental splitting reinforcement present edge reinforcement: none or < No. 4 bar
Seismic loads (cat. C, D, E, or F):	no

Geometry [in.] & Loading [lb, in.-lb]

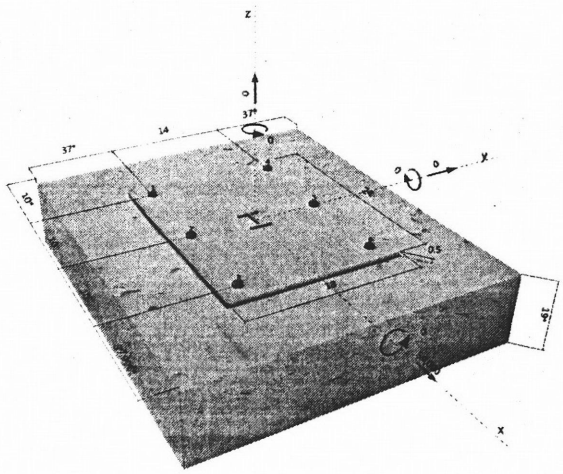

Proof I Utilization (Governing Cases)

		Design values [lb]		Utilization [%]	
Loading	Proof	Load	Capacity	β_N/β_V	Status
Tension	-	-	-	-/-	-
Shear	Concrete edge failure in direction x-	39000	40757	- / 96	OK

Warnings

- Please consider all details and hints/warnings given in the detailed report!

Fastening meets the design criteria!

PROFIS Anchor (c) 2003-2009 Hilti AG, FL-9494 Schaan Hilti is a registered Trademark of Hilti AG, Schaan

Company:		Page:	1
Specifier:		Project:	
Address:		Sub-Project I Pos. No.:	
Phone I Fax:	- | -	Date:	2/23/2012
E-Mail:			

47

Specifier's comments:

Input data

Anchor type and diameter:	**HIT-RE 500-SD + HAS, 5/8**
Effective embedment depth:	$h_{ef,act}$ = 5.000 in. ($h_{ef,limit}$ = - in.)
Material:	ASTM F 568M Class 5.8
Evaluation Service Report::	ESR 2322
Issued I Valid:	4/1/2010 | 4/1/2012
Proof:	design method ACI 318 / AC308
Stand-off installation:	e_b = 0.000 in. (no stand-off); t = 0.250 in.
Anchor plate:	l_x x l_y x t = 4.000 x 4.000 x 0.250 in. (Recommended plate thickness: not calculated)
Profile	Round bars (AISC); (L x W x T) = 0.063 in. x 0.063 in. x 0.000 in.
Base material:	cracked concrete , , f_c' = 3500 psi; h = 18.000 in., Temp. short/long: 32/32°F
Installation:	hammer drilled hole, installation condition: dry
Reinforcement:	tension: condition B, shear: condition B; no supplemental splitting reinforcement present edge reinforcement: none or < No. 4 bar
Seismic loads (cat. C, D, E, or F):	no

Geometry [in.] & Loading [lb, in.-lb]

Ledger

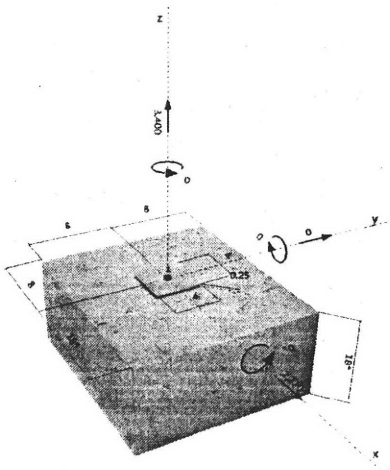

Proof I Utilization (Governing Cases)

		Design values [lb]		Utilization [%]	
Loading	Proof	Load	Capacity	β_N/β_V	Status
Tension	Bond Strength	3400	6669	51 / -	OK
Shear	Concrete edge failure in direction x+	2270	5348	- / 42	OK

Loading	β_N	β_V	ζ	Utilization $\beta_{N,V}$[%]	Status
Combined tension and shear loads	0.510	0.424	5/3	57	OK

Warnings

- Please consider all details and hints/warnings given in the detailed report!

Fastening meets the design criteria!

Input data and results must be checked for agreement with the existing conditions and for plausibility!

PROFIS Anchor (c) 2003-2009 Hilti AG, FL-9494 Schaan Hilti is a registered Trademark of Hilti AG, Schaan

kpff Consulting Engineers, Portland, Oregon	Project Galleria	By JDB	Sheet No. 48
	Location	Date 4/20/12	
	Client	Revised	Job No.
		Date	

Sidewalk, West Side Grid aa-A / 4-7

↳ Similar to East Side, but w/ more concrete topping

Topping sloped to raise grade, Max Average = 5"

↳ w/ 6" existing slab - 3" deck = 8" average

LL = 250 psf or 8k Point Load

Deck, 7.6' Span

check shoring w/ 9½" Concrete = 119 psf + 20 psf LL or 150 lb Point load

Double Span $-M = (0.125(119+20)\cdot 7.6^2)\cdot 12/1000 = 12.0$ k-in

$+M = (0.07031\cdot 119\cdot 7.6^2 + 0.2042\cdot 150\cdot 7.6)\cdot 12/1000 = 8.6$ k-in

$+M = (0.06863\cdot 119\cdot 7.6^2 + 0.2074\cdot 150\cdot 7.6)\cdot 12/1000 = 8.5$ k-in

$-M = (0.125\cdot 119\cdot 7.6^2 + 0.09623\cdot 150\cdot 7.6)\cdot 12/1000 = 11.6$ k-in

$F_b = 22.8$ ksi S^+ req'd = 8.6 k-in / 22.8 ksi = 0.377 in³

S^- req'd = 12.0 k-in / 22.8 ksi = 0.526 in³

20 GA $S^+ = 0.534 > 0.377$

$S^- = 0.564 > 0.526$ ∴ Ok

Reactions

$R_e = 0.375\,(119+20)\cdot 7.6' = 397$ lb

$R_i = 1.25\,(119+20)\cdot 7.6' = 1{,}321$ lb

20 GA N.G.

18 GA End = 507 lb w/ 2"

Interior = 1,528 lb w/ 4"

Deflection

$$\Delta = \frac{0.0054\cdot 119\cdot 7.6^4\cdot 1728}{29{,}500{,}000\cdot 1.203} = 0.10'' = L/874 \quad \therefore \text{OK}$$

Use 18GA Deck

w/ Point Load over 3'

$M_u = 1.2(75psf + 10psf) \cdot 7.6^2/8 + 1.6 \cdot 8k \cdot 7.6'/4/3$

$M_u = 106 k\text{-}in$

w/ #6 each flute $d = 5.63''$ (account for only 3" topping @ ends)

$a = 0.44 \cdot 60 / 0.85 \cdot 4 \cdot 12 = 0.65''$

$\phi M_n = 0.9 \cdot 60 \cdot 0.44 \cdot (5.63 - 0.65/2) = 126 k\text{-}in$ ∴ Ok

<u>Use #6 @ each flute</u>

<u>Beam</u>

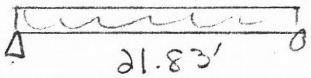

Trib = 7.6'

$w_{DL} = 120psf + 10psf$ MEP/Misc $= 988 plf$
$w_{CD} = $ " $\cdot 7.6' = 912 plf$
$w_{LL} = 250psf \cdot 7.6' = 1,900 plf$
$w_{CL} = 20psf \cdot 7.6' = 152 plf$

↳ Use low point of 3" topping

<u>W18x50 [22]</u> DCR = 0.47 $R_D = 11.33k$ $R_L = 20.74k$ $R_u = 47k$

5 Bolt $\phi R_n = 98k$

<u>(E) W24x72</u>

≃ W24x76 w/ $F_y = 36ksi$ (Properties Similar, See Orig Calcs)

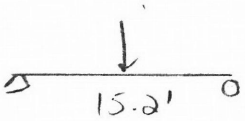

DCR = 0.33 ∴ OK

Gravity Beam Design

RAM SBeam v4.0
Galleria
West Sidewalk
Licensed to: RAM International

50

03/09/12 14:55:17

STEEL CODE: AISC360-05 LRFD

SPAN INFORMATION (ft): I-End (0.00,0.00) J-End (21.83,0.00)

Beam Size (User Selected) = W18X50 Fy = 50.0 ksi
Total Beam Length (ft) = 21.83
Distance to Adjacent Edge on Left (ft) = 7.6
Distance to Adjacent Edge on Right (ft) = 7.6

COMPOSITE PROPERTIES (Not Shored):

		Left			Right
Concrete thickness (in)		3.00			3.00
Unit weight concrete (pcf)		150.00			150.00
f'c (ksi)		4.00			4.00
Decking Orientation		perpendicular			perpendicular
Decking type		VERCO W3 Formlok			VERCO W3 Formlok
beff (in)	=	65.49	Y bar(in)	=	17.62
Mnf (kip-ft)	=	801.50	Mn (kip-ft)	=	605.76
C (kips)	=	184.36	PNA (in)	=	14.19
Ieff (in4)	=	1709.04	Itr (in4)	=	2530.37
Stud length (in)	=	4.50	Stud diam (in)	=	0.75

Rg Stud Red. Factor Rg[1] = 1.00 Rg[2] = 0.85
Rp Stud Red. Factor Rp[1] = 0.60 Rp[2] = 0.60
Stud Capacity (kips) Qn[1] = 17.2 Qn[2] = 14.6
# of studs: Max = 42 Partial = 20 Actual = 22
Number of Stud Rows = 2 Percent of Full Composite Action = 27.60
Top flange braced by decking.

LINE LOADS (k/ft):

Load	Dist (ft)	DL	CDL	LL	CLL
1	0.000	0.050	0.050	0.000	0.000
	21.830	0.050	0.050	0.000	0.000
2	0.000	0.988	0.912	1.900	0.152
	21.830	0.988	0.912	1.900	0.152

SHEAR (Ultimate): Max Vu (1.2DL+1.6LL) = 46.78 kips 1.00Vn = 191.70 kips

MOMENTS (Ultimate):

Span	Cond	LoadCombo	Mu kip-ft	@ ft	Lb ft	Cb	Phi	Phi*Mn kip-ft
Center	PreCmp+	1.2DL+1.6LL	83.3	10.9	0.0	1.00	0.90	378.75
	Init DL	1.4DL	80.2	10.9	---	---		
	Max +	1.2DL+1.6LL	255.3	10.9	---	---	0.90	545.19
Controlling		1.2DL+1.6LL	255.3	10.9	---	---	0.90	545.19

REACTIONS (kips):

	Left	Right
Initial reaction	12.16	12.16
DL reaction	11.33	11.33
Max +LL reaction	20.74	20.74

Gravity Beam Design

	Left	Right
Max +total reaction (factored)	46.78	46.78

DEFLECTIONS:

Initial load (in)	at	10.91 ft	=	-0.212	L/D	=	1236
Live load (in)	at	10.91 ft	=	-0.196	L/D	=	1337
Post Comp load (in)	at	10.91 ft	=	-0.204	L/D	=	1286
Net Total load (in)	at	10.91 ft	=	-0.416	L/D	=	630

Gravity Beam Design

RAM SBeam v4.0
Galleria
West Sidewalk Exist
Licensed to: RAM International

52

03/09/12 15:01:04

STEEL CODE: AISC360-05 LRFD

SPAN INFORMATION (ft): I-End (0.00,0.00) J-End (15.20,0.00)

Beam Size (User Selected) = W24X76 Fy = 36.0 ksi
Total Beam Length (ft) = 15.20
Mp (kip-ft) = 600.00

POINT LOADS (kips):

Dist (ft)	DL	LL	Flange Bracing Top	Flange Bracing Bottom
7.600	11.33	20.74	Yes	No

LINE LOADS (k/ft):

Load	Dist (ft)	DL	LL
1	0.000	0.076	0.000
	15.200	0.076	0.000

SHEAR (Ultimate): Max Vu (1.2DL+1.6LL) = 24.09 kips 1.00Vn = 227.15 kips

MOMENTS (Ultimate):

Span	Cond	LoadCombo	Mu kip-ft	@ ft	Lb ft	Cb	Phi	Phi*Mn kip-ft
Center	Max +	1.2DL+1.6LL	180.4	7.6	7.6	1.66	0.90	540.00
Controlling		1.2DL+1.6LL	180.4	7.6	7.6	1.66	0.90	540.00

REACTIONS (kips):

	Left	**Right**
DL reaction	6.24	6.24
Max +LL reaction	10.37	10.37
Max +total reaction (factored)	24.09	24.09

DEFLECTIONS:

Dead load (in)	at	7.60 ft	=	-0.025	L/D =	7289
Live load (in)	at	7.60 ft	=	-0.043	L/D =	4236
Net Total load (in)	at	7.60 ft	=	-0.068	L/D =	2679

SW TENTH AVENUE

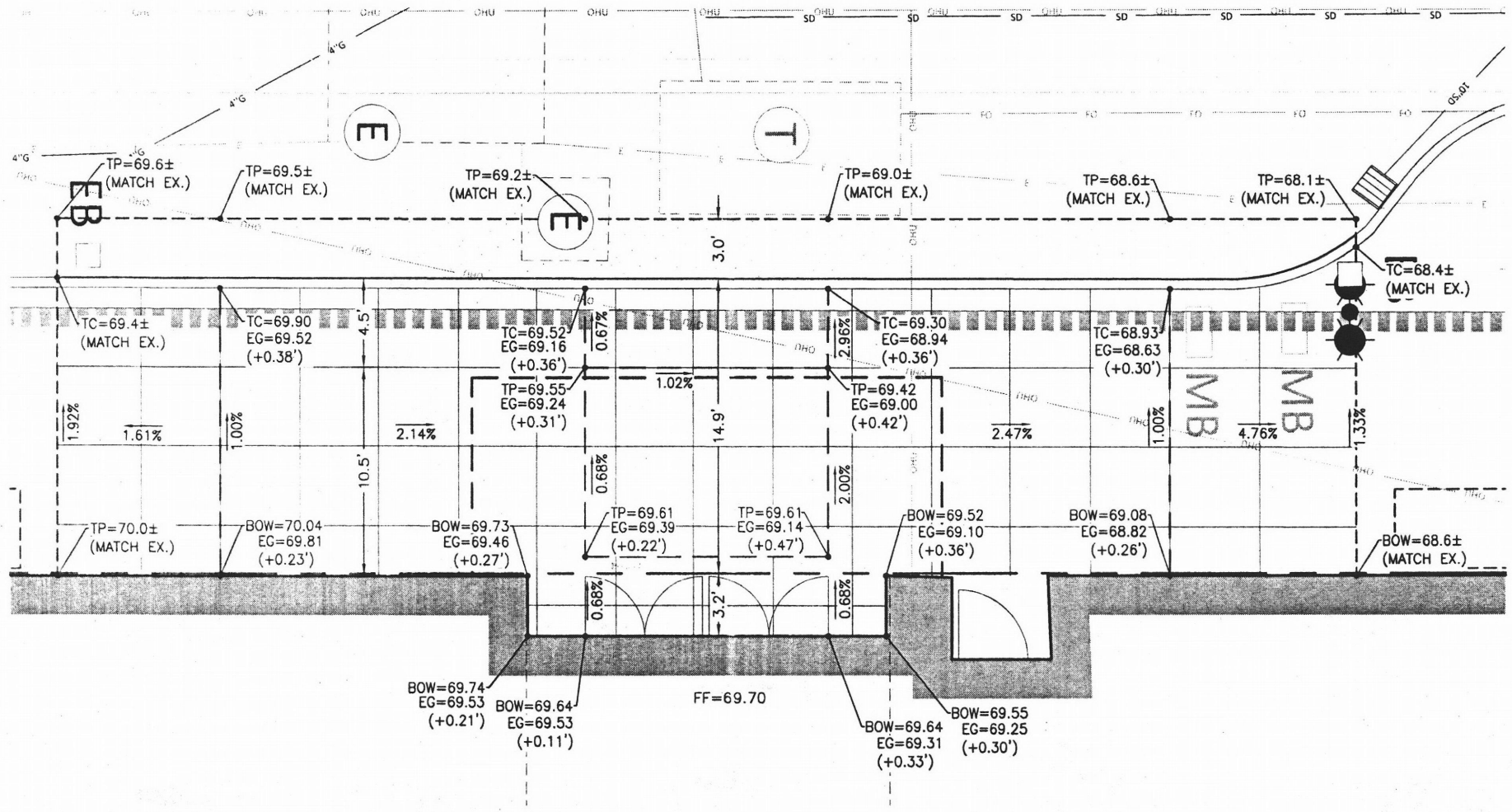

kpff Civil

SW 10TH AVE GRADING
THE GALLERIA RETAIL TENANT

SCALE: 1"=5'

SHEET NO. EXB

File: N:\c\p\2011\3118\... \PLOT\PB01\11011-PB01_grade.dwg

Plotted: 3/5/12 at 11:08am By: ssalatino

STREET LIGHT FOUNDATIONS

kpff Consulting Engineers

April 11, 2012

Mr. Mark Reuland
KPFF Consulting Engineers
111 SW Fifth Avenue Suite 2400
Portland, OR 97204

RE: Galleria Building
Portland, Oregon
Public Street Improvements – Street Light Foundations

Dear Mark:

Attached please find calculation sheets 1 through 8, dated April 10, 2012, which verify the structural adequacy of the ornamental street light foundations within the building footprint for the Galleria Building located in Portland, Oregon, as shown on Sheet C5.4, dated April 10, 2012. Design is based on the requirements of the 2009 International Building Code and City of Portland Load Criteria.

If you have any questions or need further information, please call me.

Sincerely,

Justin Brown, P.E.

JB:kw
210445.03/calc ltr 04-11-12.docx

STRUCTURAL REGISTERED PROFESSIONAL ENGINEER 17068 OREGON NOV. 9, 1999 BLAKE D. PATSY
EXPIRES: 12-31-2012

111 SW Fifth Avenue, Suite 2500 Portland, Oregon 97204-3628 (503) 227-3251 Fax (503) 227-7980

Seattle Tacoma Portland Eugene San Francisco Sacramento Los Angeles Irvine San Diego Phoenix Denver St. Louis New York

kpff Consulting Engineers, Portland, Oregon	Project Galleria	By JDB	Sheet No.
	Location Portland	Date 4/10/12	1
	Client FFA	Revised	Job No.
		Date	210445.03

Street Light Foundations

- Twin Ornamental Street Lights

  Per City of Portland

  Wind Base Shear = 466 lb

  Wind Base Moment = 6,273 lb-ft

  Resultant Height = 13.46'

- Approximate Weight

  - 9" ø 11GA Fluted, taper to 6 5/8" ø

    ↳ Double circumf. to account for flutes, assume all 9" ø

    $C = 2\pi r = 28.3'' \cdot 2 = 56.5''$ x 14'

    $A = 66\,sf \cdot 0.12''$ (4.2 psf)

    $= 325$ lbs x 1.25 to account for base

  $W = 410$ lbs

  + 2 · 100 lb lights + Base PL = 250 lb

  + Center Casting ~ 400 lb = 1,060 lb

  ↳ Use 1,500 lb

- Seismic

  $S_{DS} = 0.726$ $a_p = 2.5$ $R_p = 2.5$ $I_p = 1.0$

  $$F_p = \frac{0.4 \cdot 2.5 \cdot 0.726 \cdot W_p}{\left(2.5/1.0\right)} \cdot (1 + 2 \cdot 0) = 0.29\,W_p$$

  $F_{p,min} = 0.3 \cdot 0.726 \cdot 1.0 \cdot W_p = 0.22\,W_p$

  $F_p = 0.29 \cdot 1.5k = 435$ lb $< 1.6 \cdot W = 746$ lb

kpff Consulting Engineers, Portland, Oregon	Project: Galleria	By: JDB	Sheet No. 2
	Location	Date	
	Client	Revised	Job No.
		Date	

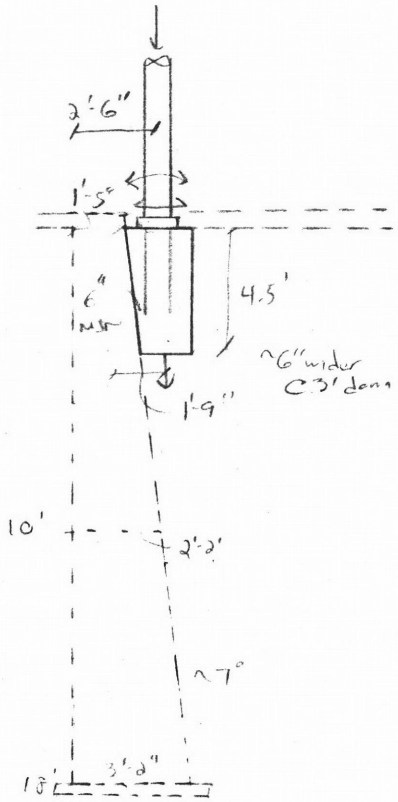

Section

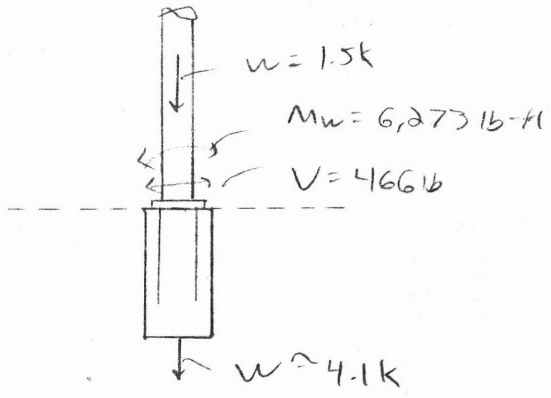

Elevation

Weight of Conc = 3'·2'·4.5'·150 pcf = 4.1 k

M_{wind} = 6,273 lb-ft = 75.3 k-in + 466 lb·24" = 86.5 k-in
↳ e

M_{DL} = (1.5k + 4.1k)·21" = 118 k-in
↳ e

M_u = 1.2D + 1.6W = 1.2·86.5 + 1.6·118 = 293 k-in

V_u = 1.6·466 lb = 0.75 k Horiz or Tension

V_u = 1.2·(1.5k + 4.1k) = 6.7 k Vert

- Per PBOT Standard Drawing P-662

w/ #14 @ 9" O.C. x2, 5" embed, Hilti HIT-RE 500-SD
2.5 ksi cracked

DCR = 0.58

www.hilti.us

Profis Anchor 2.2.6

Company:		Page:	1
Specifier:		Project:	
Address:		Sub-Project I Pos. No.:	
Phone I Fax:	|	Date:	3/19/2012
E-Mail:			

Specifier's comments:

1 Input data

Anchor type and diameter:	**HIT-RE 500-SD + Rebar A 615 Gr.60 #4**
Effective embedment depth:	$h_{ef,act}$ = 5.000 in. ($h_{ef,limit}$ = - in.)
Material:	ASTM A 615 Gr.60
Evaluation Service Report::	ESR 2322
Issued I Valid:	4/1/2010 | 4/1/2012
Proof:	design method ACI 318 / AC308
Stand-off installation:	e_b = 0.000 in. (no stand-off); t = 0.500 in.
Anchor plate:	l_x x l_y x t = 40.000 in. x 24.000 in. x 0.500 in.; (Recommended plate thickness: not calculated)
Profile:	no profile
Base material:	cracked concrete, 2500, f_c' = 2500 psi; h = 18.000 in., Temp. short/long: 32/32 °F
Installation:	hammer drilled hole, installation condition: dry
Reinforcement:	tension: condition B, shear: condition B; no supplemental splitting reinforcement present edge reinforcement: none or < No. 4 bar
Seismic loads (cat. C, D, E, or F)	no

Geometry [in.] & Loading [lb, in.lb]

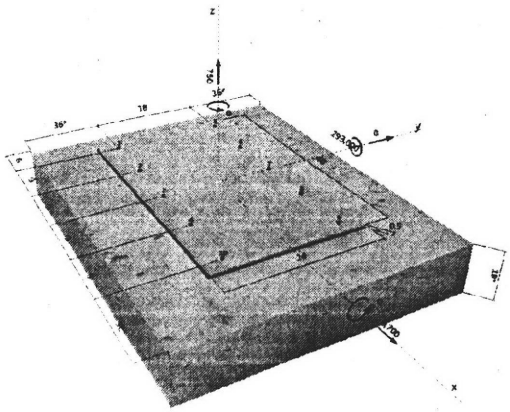

2 Proof I Utilization (Governing Cases)

		Design values [lb]		Utilization	
Loading	**Proof**	**Load**	**Capacity**	**β_N / β_V [%]**	**Status**
Tension	Bond Strength	10926	19065	58 / -	OK
Shear	Concrete edge failure in direction x+	6700	27289	- / 25	OK

Loading	**β_N**	**β_V**	**ζ**	**Utilization $\beta_{N,V}$ [%]**	**Status**
Combined tension and shear loads	0.579	0.246	5/3	50	OK

3 Warnings

- Please consider all details and hints/warnings given in the detailed report!

PROFIS Anchor (c) 2003-2009 Hilti AG, FL-9494 Schaan. Hilti is a registered Trademark of Hilti AG, Schaan

Concrete Base

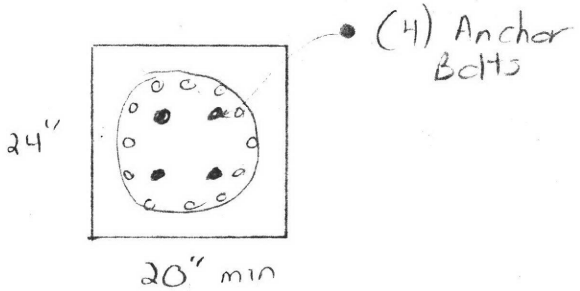

$V_u = 1k$

$P_u = 6.7k$

$M_u = 293\ k\text{-}in = 25\ k\text{-}ft$

Per PBOT P-622 u / (10) #6 DCR = 0.17

$\phi V_c = 0.75 \cdot 2\sqrt{4000} \cdot 20'' \cdot 16'' = 30k \gg 1k$

(E) Basement Wall

(Gravity Wall @ Street / Basement Edge)

$M_n = 5\sqrt{f'_c}\, S_m$ or $0.85 f'_c S_m$ $\phi = 0.60$

$V_n = 4/3\ \sqrt{f'_c}\, b_w h$ $\phi = 0.60$

$S = bh^2/6$ $h = 1'\text{-}5''$ min, tapered to larger

$b = 4'$, assume 1' effective each side

$\phi M_n = 0.60 \cdot 5 \cdot \sqrt{3{,}000}\ 48 \cdot 17^2/6\ /1000 = 380\ k\text{-}in > M_u = 293$

or $0.60 \cdot 0.85 \cdot \sqrt{3{,}000}\ 48 \cdot 17^2/6\ /1000 = 3{,}537\ k\text{-}in$

↳ Could use larger h and b, still OK

$\phi V_n = 0.6 \cdot 4/3\ \sqrt{3{,}000} \cdot 48'' \cdot 17''/1000 = 35.8k > V_u = 1k$

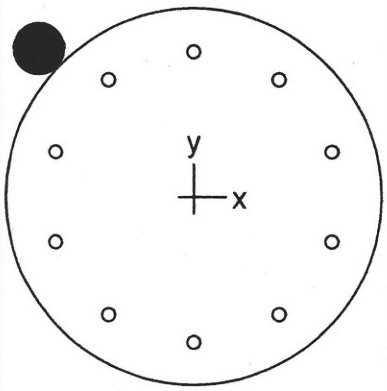

20 in diam.

Code: ACI 318-08

Units: English

Run axis: About X-axis

Run option: Investigation

Slenderness: Not considered

Column type: Structural

Bars: ASTM A615

Date: 03/19/12

Time: 11:32:03

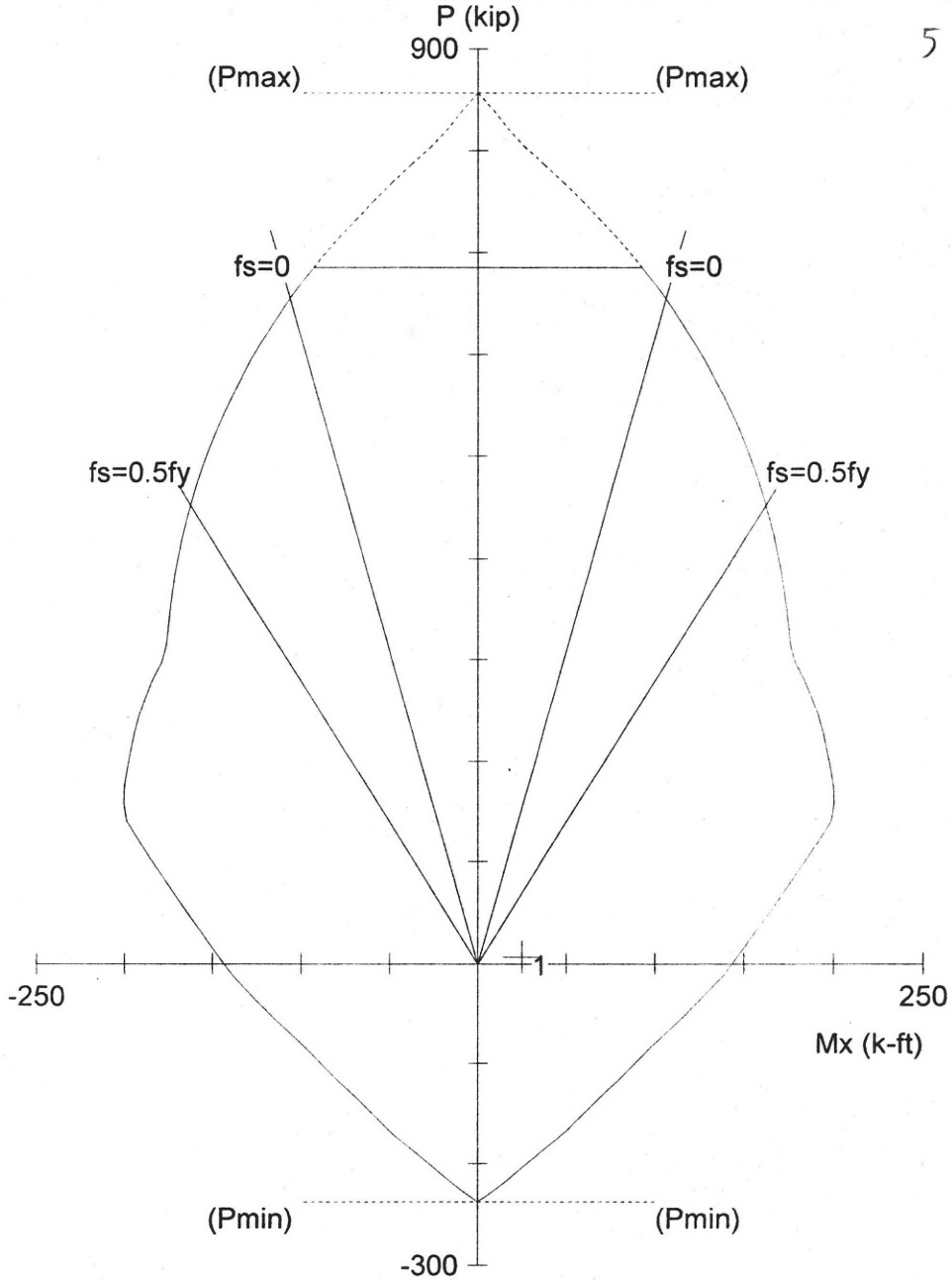

spColumn v4.60. Licensed to: KPFF Consulting Engineers. License ID: 57385-1023642-2-26E70-204EC

File: D:\Projects\Galleria\Civil\Streetlight.col

Project: Galleria

Column: Street Light

Engineer: JDB

f'c = 4 ksi	fy = 60 ksi	Ag = 314.159 in^2	10 #6 bars
Ec = 3605 ksi	Es = 29000 ksi	As = 4.40 in^2	rho = 1.40%
fc = 3.4 ksi		Xo = 0.00 in	Ix = 7853.98 in^4
e_u = 0.003 in/in		Yo = 0.00 in	Iy = 7853.98 in^4
Beta1 = 0.85		Min clear spacing = 4.04 in	Clear cover = 1.88 in

Confinement: Tied

phi(a) = 0.8, phi(b) = 0.9, phi(c) = 0.65

Charlie Hales, Commissioner
Engineering & Development
Victor F. Rhodes, City Engineer
1120 S.W. 5th Avenue, Room 802
Portland, Oregon 97204-1914
(503) 823-7004
FAX (503) 823-7371
TDD 823-6868

6

CITY of PORTLAND
OFFICE of TRANSPORTATION

MEMO

To: Bill Johnson, Street Lighting
From: Steven L. Barrett, PE, SE
Subject: Design Values for Wind Loading on Twin Ornamental Street Lights
Date: September 5, 1997

In the future when it is necessary to have the foundation for a twin ornamental pole designed by some other than our Section, you can provide them with the following information:

Wind Design Speed = 90 MPH

Wind Load Base Shear = 466 lb

Wind Load Base Moment = 6,273 ft-lb

Height to Application of Resultant = 13.46 ft

These were determined from measurements of the details on your standard drawing of this type of pole and fixtures. These are all working values with all coefficients from the American Association of State Highway and Transportation Officials publication "Standard Specifications for Structural Supports for Highway Signs, Luminaries and Traffic Signals" applied. No load factors or reductions have been applied. Feel free to provide copies of this memo to any one who needs the information. If there are any questions, please call me a (503) 823-7059.

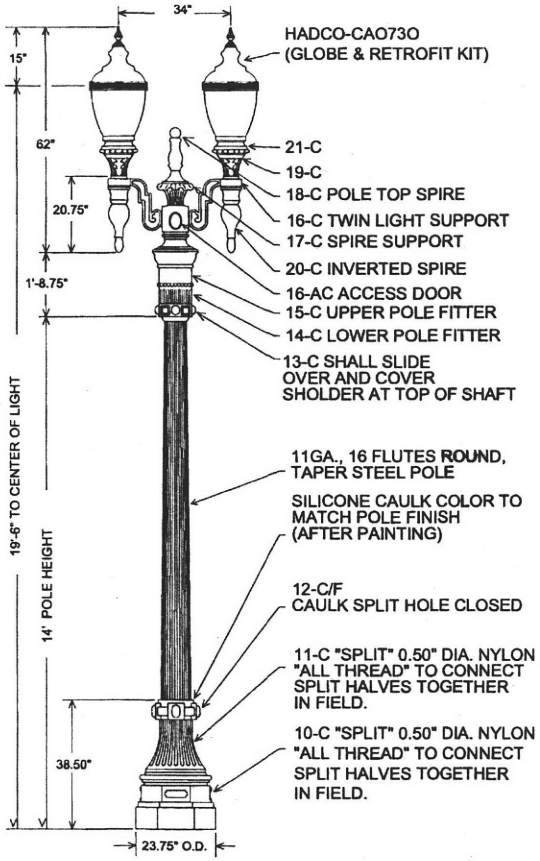

TWIN TRADITIONAL POLE ASSEMBLY

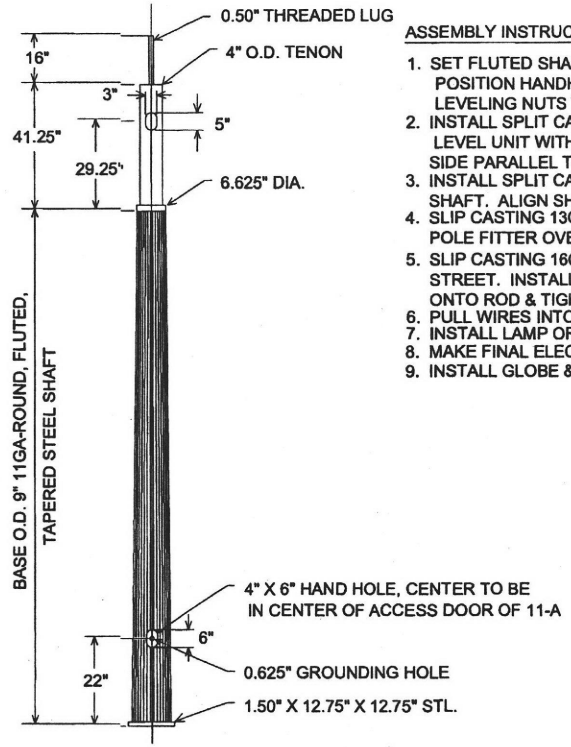

TWIN TRADITIONAL POLE SHAFT ASSEMBLY

ASSEMBLY INSTRUCTIONS :

1. SET FLUTED SHAFT ON FOUNDATION, USE DOUBLE NUTS TO PLUMB SHAFT, POSITION HANDHOLE ON SIDE OPPOSITE APPROACHING TRAFFIC. ADJUST LEVELING NUTS TO PLUMB POLE IN ALL DIRECTIONS.
2. INSTALL SPLIT CASTING 10C LOWER BASE AROUND FLUTED SHAFT AND LEVEL UNIT WITH SHIMS AND GROUTING TO FINISH GRADES. SET ONE FLAT SIDE PARALLEL TO CURB.
3. INSTALL SPLIT CASTING 11C UPPER BASE AND 12C LOWER COLLAR OVER FLUTED SHAFT. ALIGN SHAFT HANDHOLE WITH POLE HANDHOLE.
4. SLIP CASTING 13C UPPER POLE COLLAR, 14C LOWER POLE FITTER & 15C UPPER POLE FITTER OVER FLUTED SHAFT.
5. SLIP CASTING 16C OVER POLE AND SET ON CASTING 15C. ALIGN 90 DEGREE TO STREET. INSTALL CASTING 17C SPIRE SUPPORT, THREAD 18C TOP SPIRE CASTING ONTO ROD & TIGHTEN.
6. PULL WIRES INTO THE ARM, CONNECT WIRES TO THE BALLAST ASSEMBLY.
7. INSTALL LAMP OR QL VESSEL, FURNISHED BY CONTRACTOR.
8. MAKE FINAL ELECTRICAL CONNECTION.
9. INSTALL GLOBE & RETROFIT KIT (SEE P-654).

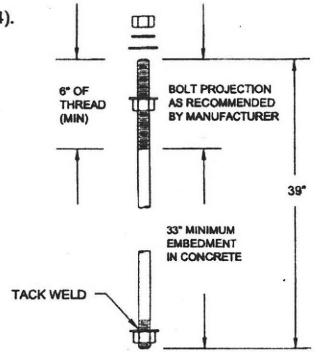

(4) 1 1/4" DIA. GALV. STL. A449 ANCHOR BOLTS
(12) 1 1/4" GALV. STL. HEX NUTS
(4) 1 1/4" GALV. STL. LOCKWASHERS
(12) 1 1/4" GALV. STL. FLATWASHERS

ANCHOR BOLT DETAIL

NOT TO SCALE

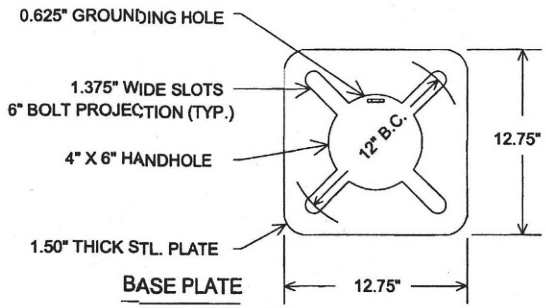

BASE PLATE

The selection and use of this Standard Detail, while designed in accordance with generally accepted engineering principles and practices, is the sole responsibility of the user.

Note:
All material and workmanship shall be in accordance with the City of Portland Standard Construction Specifications.

BUREAU OF TRANSPORTATION
CITY OF PORTLAND, OREGON
Steve Iourman
Chief Engineer

Standard Detail Title

STREET LIGHTING
TWIN ORNAMENTAL POLE
DETAILS

Effective Date: N/A
Calc. Book No.: N/A
Baseline Report Date: N/A

Standard Detail No.
P-652

Plot Date: 12/1/2011 12:05:56 PM Filename: C:\Documents and Settings\jdf\Desktop\Street Lighting Details\P-652 Twin Ornamental Pole Details.dgn 11x17 PRINT SCALE 8SCALE3

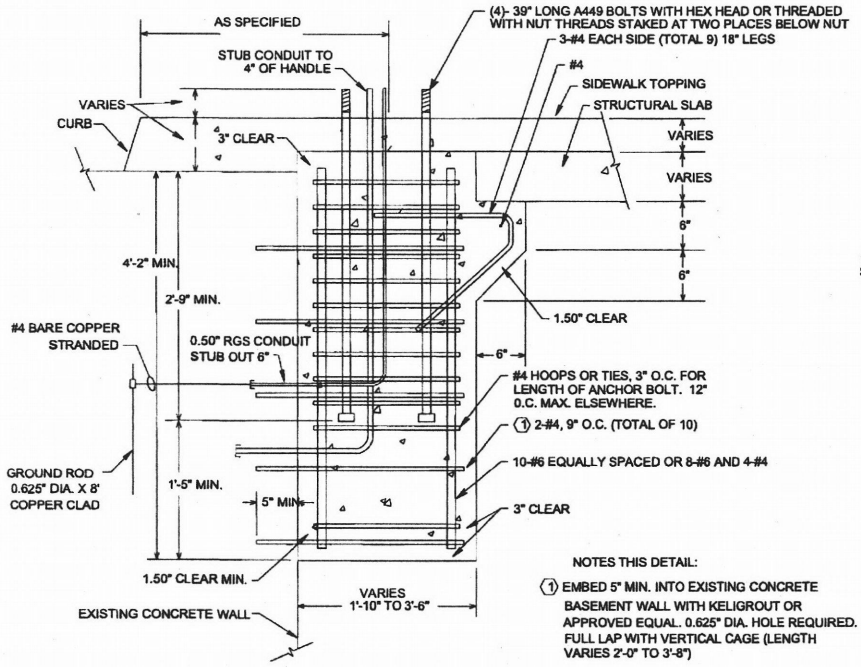

NOTES THIS DETAIL:

(1) EMBED 5" MIN. INTO EXISTING CONCRETE BASEMENT WALL WITH KELIGROUT OR APPROVED EQUAL. 0.625" DIA. HOLE REQUIRED. FULL LAP WITH VERTICAL CAGE (LENGTH VARIES 2'-0" TO 3'-8")

TYPE "B" BASEMENT POLE FOOTING
ELEVATION VIEW

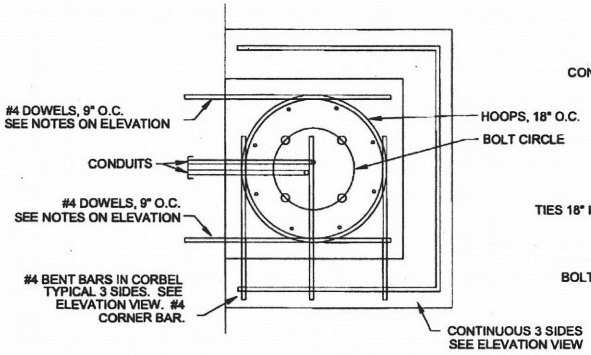

PLAN VIEW WITH HOOPS

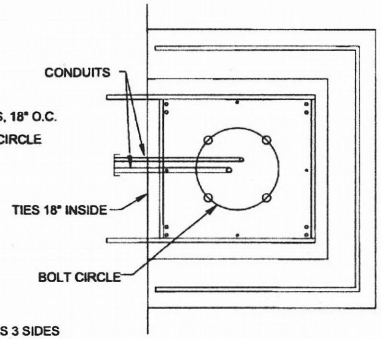

PLAN VIEW WITH TIES

NOT TO SCALE

The selection and use of this Standard Drawing, while designed in accordance with generally accepted engineering principles and practices, is the sole responsibility of the user.

BUREAU OF TRANSPORTATION
CITY OF PORTLAND, OREGON
Steve Iverson
Chief Engineer

Standard Drawing Title

STREET LIGHTING
TYPE "B" BASEMENT POLE FOOTING

Note:
All material and workmanship shall be in accordance with the City of Portland Standard Construction Specifications.

Effective Date: N/A
Calc. Book No.: N/A
Baseline Report Date: N/A

Standard Drawing No.
P-662

Plot Date: 1/31/2011 12:06:09 PM Filename: C:\Documents and Settings\KSDesktop\Street Lighting Detail\P-662 Type B Basement Street Light Pole Footing.dgn 11x17 PRINT SCALE: $SCALE$