MECHANICAL PERMIT APPLICATION

13-197935-CO

City of Portland, Oregon - Bureau of Development Services

1900 SW 4th Avenue, Portland, Oregon 97201 • 503-823-7363 • TTY 503-823-6868 • www.portlandoregon.gov/bds

This permit application expires if a permit is not obtained within 180 days after it has been accepted as complete.

Type of work

- ☐ New construction
- ☑ Addition/alteration/replacement
- ☐ Demolition
- ☐ Other:

Category of construction

- ☐ 1 & 2 family dwelling
- ☑ Commercial/industrial
- ☐ Accessory building
- ☐ Multifamily
- ☐ Master builder
- ☐ Other:

Job site information and location

Job no.:

Job address: 1709 SE 3rd Ave

City/State/ZIP: Portland OR 97214

Site/bldg./apt. no.:

Project name: Oregon Electric bldg

Cross street/directions to job site:

Subdivision:

Lot no.

Tax map/parcel no.

Description of work (example: upstairs bath fan/dryer exhaust)

new 4 ton split system
ductwork
grilles

Provide RS permit no.

☐ Property owner / ☐ Tenant

Name:

E-mail:

Address:

City/State/ZIP:

Phone:

FAX:

Owner installation: This installation is being made on property that I own, which is not intended for sale, lease, rent, or exchange.

Owner signature:

Date:

☑ Contractor / ☐ Subcontractor

Business name: American Heating

E-mail:

Address: 5035 SE 24th Ave

City/State/ZIP: Portland OR 97202

Phone: 503-239-4600

FAX: 503-239-7038

Lic. no. 1077

CCB lic. no. 33135

Authorized signature: Brad Manchester

Print name: Brad Manchester

Date: 9-5-13

☑ Applicant / ☐ Contact Person

Business name: American Heating

Contact name: Brad Manchester

Address: 5035 SE 24th Ave

City/State/ZIP: Portland OR 97202

Phone: 503-239-4600

FAX: 503-239-7038

E-mail:

RS Permit/No Fees Due ☐

Residential Combo permit subcontractor submittals only can be faxed to 503-823-7693 or e-mailed to bdscombinspec@portlandoregon.gov.

Commercial Fee Schedule - Use Checklist

Mechanical permit fees* are based on the value of the work performed. Indicate the value (rounded to the nearest dollar of all mechanical materials, equipment, labor, overhead and profit.

Value: $ 16,100

Residential Equipment / Systems Fees

For special information use checklist

Description	Qty.	Fee	Total
Heating / cooling			
Air conditioner (site plan required)		$26	
Furnace / burner including duct work / vent / liner		$55	
Heat pump (site plan required)		$51	
Air handling unit		$26	
Hydronic hot water system		$32	
Residential boiler (radiator or hydronic) includes piping		$32	
Unit heaters (fuel type, not electric) in-wall, in-duct, suspended, etc.		$26	
Vent for appliance other than furnace		$22	
Alteration of existing HVAC system		$32	
Other fuel appliances			
Decorative gas fireplace		$26	
Flue vent for water heater or gas fireplace		$22	
Wood / pellet stove		$57	
Gas or wood fireplace / insert		$57	
Chimney / liner / flue / vent		$22	
Other:		$32	
Environmental exhaust and ventilation			
Range hood / other kitchen equipment		$14	
Clothes dryer exhaust		$14	
Single-duct exhaust (bathrooms, toilet compartments, utility rooms)		$14	
Attic / crawl space fans		$14	
Other:		$32	
Gas fuel piping			
$14 for the first four, $2.57 for each additional. Please indicate number of fuel gas piping outlets below:			
Furnace, etc.			
Gas heat pump			
Wall / suspended / unit heater			
Water heater / boiler			
Fireplace			
Range			
Barbecue			
Clothes dryer			
Other:			
Other appliances			
Including oil tanks, gas and diesel generators, gas and electric kilns, gas appliances / equipment not included above		$32	
Mechanical permit fees			
Subtotal			
Minimum permit fee ($95)			
Commercial plan review (60% of permit fee)			
State surcharge (12% of permit fee)			
TOTAL PERMIT FEE			

RECEIVED SEP 05 2013 Permit Number

AMERICAN HEATING: CONDENSOR UNIT AT WALL

STRUCTURAL CALCULATIONS

MECHANICAL UNIT CALCULATIONS — CU1-CU4
SKETCHES — 4/CU & 5/CU

(7 PAGES TOTAL INCLUDING COVER SHEET)

City of Portland
REVIEWED FOR CODE COMPLIANCE
SEP 05 2013
Permit Number

June 28, 2013

PROJECT NUMBER: 130054.01

CURTIS D. GAGNER
STATE OF WASHINGTON
42073
REGISTERED
PROFESSIONAL ENGINEER

STRUCTURAL
REGISTERED PROFESSIONAL ENGINEER
OREGON
FEB. 13, 2008
CURTIS D. GAGNER

EXPIRES: 6/30/15

CIDA
ARCHITECTURE
ENGINEERING
PLANNING
INTERIORS
LANDSCAPE

15895 SW 72ND AVE
SUITE 200
PORTLAND, OR 97224
PHONE: 503.226.1285
FAX: 503.226.1670
INFO@CIDAINC.COM
WWW.CIDAINC.COM

CIDA
4445 SW BARBUR BLVD., SUITE 200
PORTLAND, OREGON 97239
TEL: 503.226.1285 FAX: 503.226.1670
E-MAIL: info@cidainc.com

PROJECT NAME: WALL MOUNTED CU PROJ. NO. SHEET CU1
TITLE: BY: COG DATE: 1/21/13

WALL MOUNTED CONDENSOR UNIT

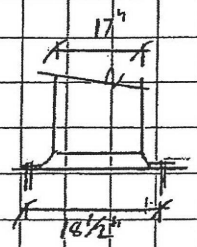

L = 44½"
W = 18½" (℄ BOLTS)
H = 43¼"

W_p = 306 lb MAX

S_{DS} = 0.80 (CONSERVATIVE FOR PORTLAND METRO AREA)

$a_p = 2.5$ $R_p = 6$ $I_p = 1.0$ $z = h/2$

$$F_p = \frac{0.4 S_{DS} a_p I_p}{R_p}\left(1 + 2\left(\frac{z}{h}\right)\right) W_p$$

$F_p = 0.267 W_p$ $F_p = 82$ lb $0.7F_p = 57$ lb

- TRY 3' LONG UNISTRUT @ WALL
W/ UNISTRUT SHIM @ UNIT

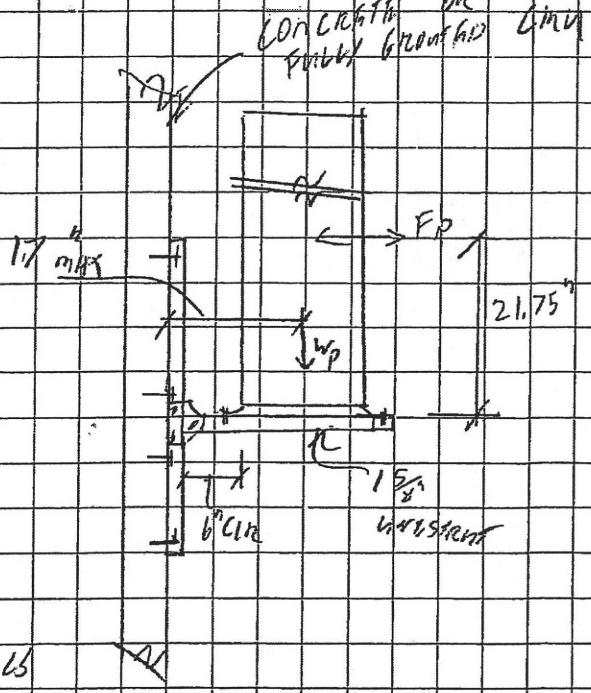

$M_D = W_p(17") = 5202$ in-lb
$M_E = F_p(21.75") = 1784$ in-lb

1.0D + 0.7E (ASD FOR STRUT DESIGN)

$M = M_D + 0.7M_E = 6451$ in-lb
$V = 306$ lb
$T = 57$ lb

- PIODD UNISTRUT

$M_{ANCHOR} = 5080$ in-lb $> \frac{6451 \text{ in-lb}}{2} = 3226$ in-lb

USE (2) UNISTRUT HORIZONTALS @ UNIT

CIDA
4445 SW BARBUR BLVD., SUITE 200
PORTLAND, OREGON 97239
TEL: 503.226.1285 FAX: 503.226.1670
E-MAIL: info@cidainc.com

PROJECT NAME: _____ PROJ. NO. _____ SHEET C42
TITLE: _____ BY: _____ DATE: 1/21/13

STRUT DESIGN CONT.

M = 3226 in-lb
P = 29 lb
V = 153 lb
} LOADS @ ONE SUPPORT BRACKET

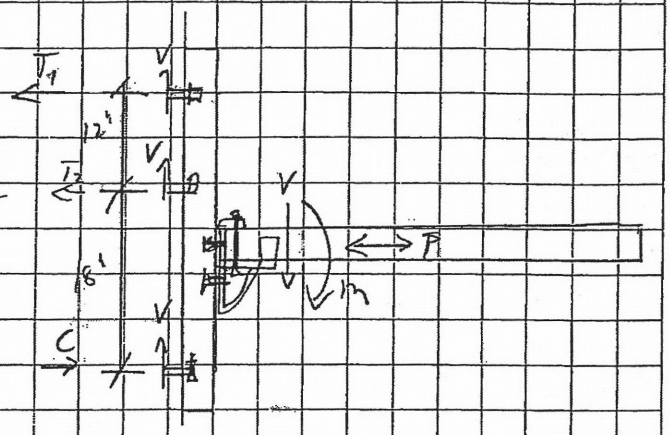

UNISTRUT P1075 BRACKET
M_{ALLOW} = 5100 in-lb

CONNECTION TO WALL

- CONCRETE 1.2D + 1.0E

M = [1.2(5202 in-lb) + 1784 in-lb] / 2 = 4013 in-lb
V = 1.2(306 lb)/2 = 184 lb
P = 82 lb/2 = 41 lb

T_1 = M/30" = 134 lb

T_2 = P/2 = 20.5 lb
C = T_1 + T_2 = 155 lb
V = 184 lb/3 = 62 lb

TRY 3/8" ø SIMPSON TITAN - HD ANCHORS w/ 2 1/2" EMBED

T = 134 lb (1.3) = 174.2 lb
V = 62 lb (1.3) = 81 lb
↑ INCREASE PER 1304.2c

u = 0.66 < 1 USE 3/8" ø x 2 1/2" EMBED ANCHORS

(INCLUDES BRITTLE FAILURE REDUCTION 0.4)

CMU 1.0D + 0.7E

M = 3226 in-lb
V = 153 lb
P = 29 lb

T_1 = 108 lb
T_2 = 15 lb
C = 123 lb
V = 51 lb
TITAN-HD w/ 2 1/2" EMBED
V_{ALLOW} = 870 lb
T_{ALLOW} = 480 lb
u = 0.28 < 1 OK

USE (2) 3/8" ø x 2 1/2 EMBED

CH 3

Anchor Calculations

Anchor Selector (Version 4.11.0.0)

Job Name : Condenser bracket

Date/Time : 1/21/2013 4:56:10 PM

Calculation Summary - ACI 318 Appendix D For Cracked Concrete per ACI 318-08

Anchor

Anchor	Steel	Code Report	# of Anchors	Embedment Depth (in)	Category
3/8" Titen HD	N/A	ICC-ES ESR-2713	1	2.5	1

Concrete

Concrete	Cracked	f'_c(psi)	$\Psi_{c,V}$
Normal weight	Yes	3000.0	1.00

Condition	Thickness (in)	Suppl. Edge Reinforcement
B tension and shear	6	No

Anchor Layout Dimensions

c_{x1} (in)	c_{x2} (in)	c_{y1} (in)	c_{y2} (in)	b_{x1} (in)	b_{x2} (in)	b_{y1} (in)	b_{y2} (in)
12	12	12	12	1.5	1.5	1.5	1.5

Factored Loads

N_{ua} (lb)	V_{uax} (lb)	V_{uay} (lb)	M_{ux} (lb*ft)	M_{uy} (lb*ft)
175	81	0	0	0

e_x(in)	e_y(in)	Mod/high seismic	Apply entire shear @ front row
0	0	Yes	No

Individual Anchor Tension Loads

N_{ua1} (lb)
175.00

e'_{Nx}(in)	e'_{Ny}(in)
0.00	0.00

Individual Anchor Shear Loads

V_{ua1} (lb)
81.00

e'_{Vx}(in)	e'_{Vy}(in)
0.00	0.00

Tension Strengths

Steel (Φ = 0.65)

N_{sa}(lb)	ΦN_{sa}(lb)	N_{ua}(lb)	$N_{ua}/\Phi N_{sa}$
10890	7078.50	175.00	0.0247

Concrete Breakout (Φ = 0.65 , Φ_{seis} = 0.75)

N_{cb}(lb)	ΦN_{cb}(lb)	N_{ua}(lb)	$N_{ua}/\Phi N_{cb}$
2192.65	1068.92	175.00	0.1637

Pullout (Φ = 0.65 , Φ_{seis} = 0.75)

N_{pn}(lb)	ΦN_{pn}(lb)	N_{ua}(lb)	$N_{ua}/\Phi N_{pn}$
1352.87	659.53	175.00	0.2653

CH4

Side-Face Blowout does not apply

Shear Strengths

Steel ($\Phi = 0.60$)

V_{eq}(lb)	ΦV_{eq}(lb)	V_{ua}(lb)	$V_{ua}/\Phi V_{eq}$
2855	1713.00	81.00	0.0473

Concrete Breakout (case 1) ($\Phi = 0.70$, $\Phi_{seis} = 0.75$)

V_{cbx}(lb)	ΦV_{cbx}(lb)	V_{uax}(lb)	$V_{uax}/\Phi V_{cbx}$
5123.69	2689.94	81.00	0.0301

V_{cby}(lb)	ΦV_{cby}(lb)	V_{uay}(lb)	$V_{uay}/\Phi V_{cby}$	$V_{ua}/\Phi V_{cb}$
5123.69	2689.94	0.00	0.0000	0.0301

Concrete Breakout (case 2) does not apply to single anchor layout

Concrete Breakout (case 3) ($\Phi = 0.70$, $\Phi_{seis} = 0.75$)

c_{x1} edge

V_{cby}(lb)	ΦV_{cby}(lb)	V_{uay}(lb)	$V_{uay}/\Phi V_{cby}$
10247.38	5379.87	0.00	0.0000

c_{y1} edge

V_{cbx}(lb)	ΦV_{cbx}(lb)	V_{uax}(lb)	$V_{uax}/\Phi V_{cbx}$
10247.38	5379.87	81.00	0.0151

c_{x2} edge

V_{cby}(lb)	ΦV_{cby}(lb)	V_{uay}(lb)	$V_{uay}/\Phi V_{cby}$
10247.38	5379.87	0.00	0.0000

c_{y2} edge

V_{cbx}(lb)	ΦV_{cbx}(lb)	V_{uax}(lb)	$V_{uax}/\Phi V_{cbx}$	$V_{ua}/\Phi V_{cb}$
10247.38	5379.87	81.00	0.0151	0.0151

Pryout ($\Phi = 0.70$, $\Phi_{seis} = 0.75$)

V_{cp}(lb)	ΦV_{cp}(lb)	V_{uax}(lb)	$V_{uax}/\Phi V_{cp}$
2192.65	1151.14	81	0.0704

V_{cp}(lb)	ΦV_{cp}(lb)	V_{uay}(lb)	$V_{uay}/\Phi V_{cp}$	$V_{ua}/\Phi V_{cp}$
2192.65	1151.14	0	0.0000	0.0704

Interaction check

Note: Ratios in the equation below have been divided by 0.4 factor for brittle failure.
V.Max(0.18) <= 0.2 and T.Max(0.66) <= 1.0 [Sec D.7.1]

Interaction check: PASS

Use 3/8" diameter Titen HD anchor(s) with 2.5 in. embedment

STRUCTURAL REGISTERED PROFESSIONAL ENGINEER 63564PE OREGON FEB. 13, 2008 CURTIS D. GAGNER

EXPIRES: 6/30/15

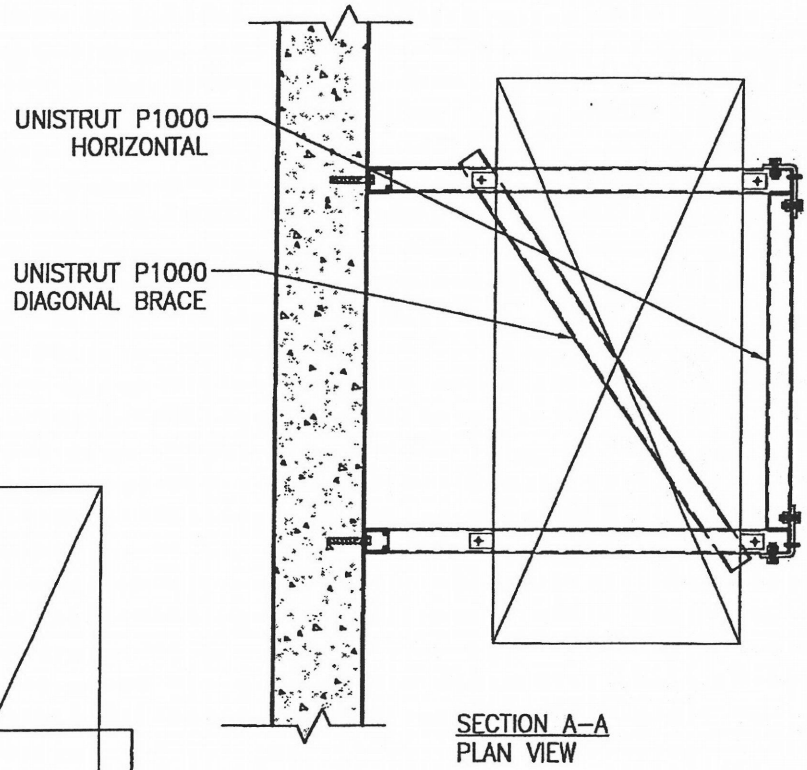

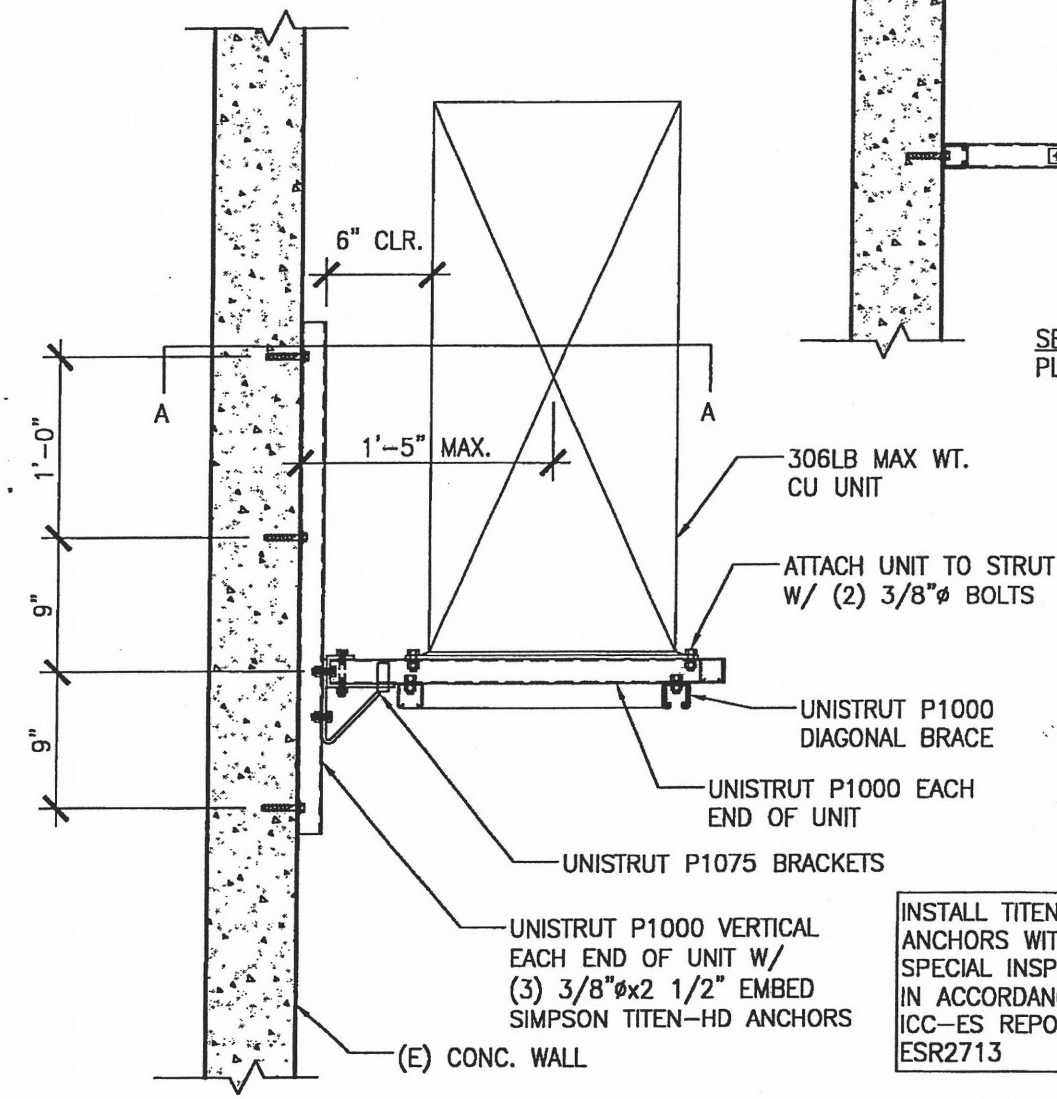

CURTIS D. GAGNER STATE OF WASHINGTON 42073 STRUCTURAL ENGINEER PROFESSIONAL ENGINEER

INSTALL TITEN–HD ANCHORS WITH SPECIAL INSPECTION IN ACCORDANCE WITH ICC–ES REPORT ESR2713

4/CU CU AT CONCRETE WALL

1" = 1'–0"

CIDA ARCHITECTURE ENGINEERING PLANNING INTERIORS LANDSCAPE

15895 SW 72ND AVE SUITE 200
PORTLAND, OREGON 97224
TEL: 503.226.1285
FAX: 503.226.1670

DRAWING TITLE: MECHANICAL UNIT SUPPORT	DRAWING: 4 CU
PROJECT: AMERICAN HEATING STANDARD PORTLAND, OR	
JOB: 130054.01 DATE: 06.28.2013	

© 2013 CIDA, INC. ALL RIGHTS RESERVED

STRUCTURAL REGISTERED PROFESSIONAL ENGINEER 63354PE OREGON FEB. 13, 2008 CURTIS D. GAGNER

EXPIRES: 6/30/15

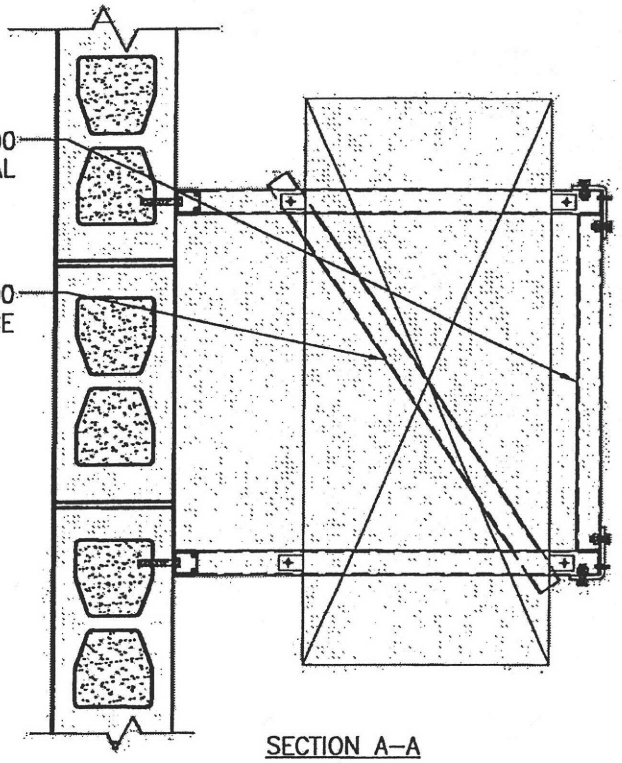

SECTION A–A
PLAN VIEW

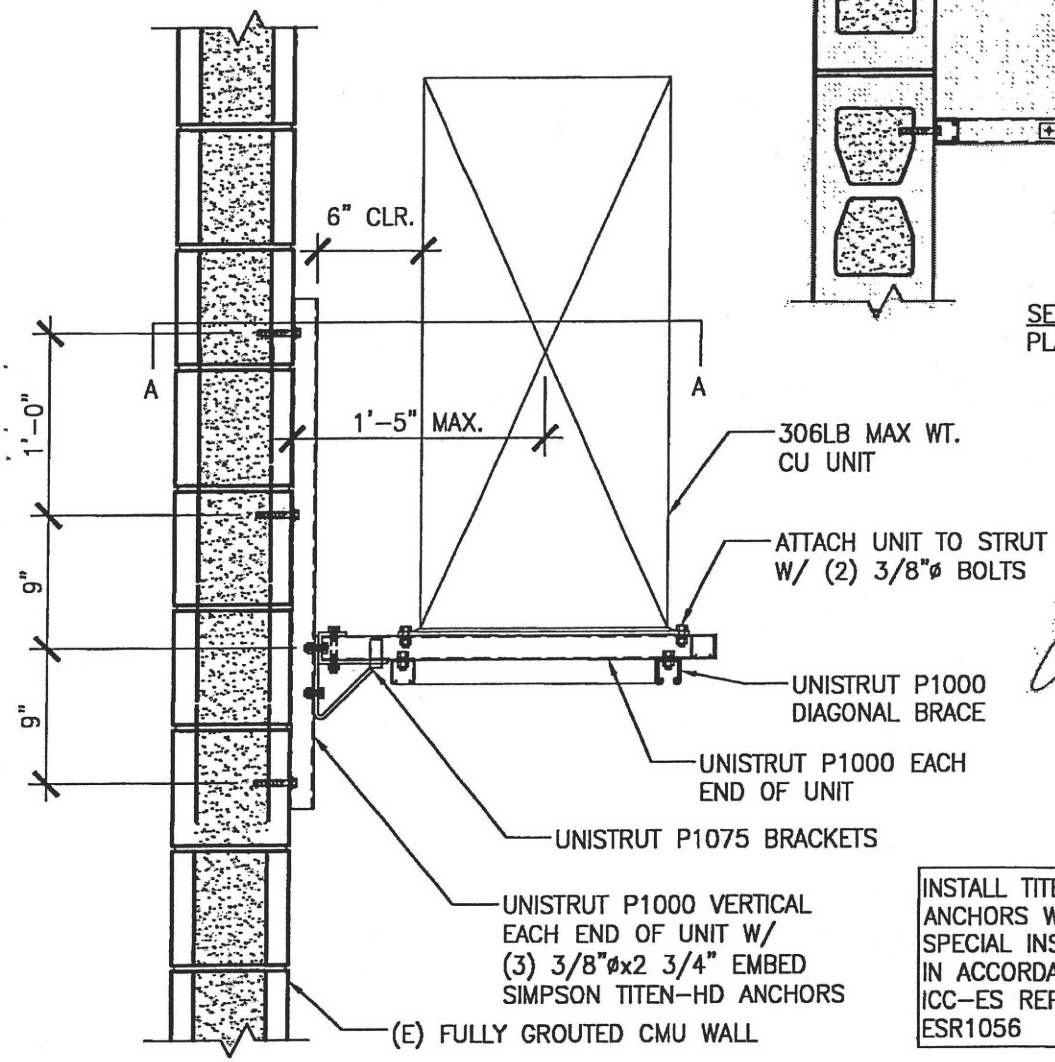

CURTIS D. GAGNER STATE OF WASHINGTON 42073 STRUCTURAL ENGINEER PROFESSIONAL ENGINEER

INSTALL TITEN–HD ANCHORS WITH SPECIAL INSPECTION IN ACCORDANCE WITH ICC–ES REPORT ESR1056

5/CU CU AT CMU WALL

1" = 1'–0"

CIDA ARCHITECTURE ENGINEERING PLANNING INTERIORS LANDSCAPE
15895 SW 72ND AVE SUITE 200
PORTLAND, OREGON 97224
TEL: 503.226.1285
FAX: 503.226.1670

DRAWING TITLE: MECHANICAL UNIT SUPPORT	DRAWING: 5/CU
PROJECT: AMERICAN HEATING STANDARD PORTLAND, OR	
JOB: 130054.01 DATE: 06.28.2013	

© 2013 CIDA, INC. ALL RIGHTS RESERVED

OREGON ELECTRIC GOUP HVAC

PORTLAND, OR

STRUCTURAL CALCULATIONS

MECHANICAL UNIT SUPPORT AND ANCHORAGE MA1-MA4
SKETCHES AH1-AH3

(8 PAGES TOTAL INCLUDING COVER SHEET)

STRUCTURAL REGISTERED PROFESSIONAL ENGINEER
C0354 PE
OREGON
FEB. 13, 2008
CURTIS D. GAGNER
EXPIRES: 6/30/15

9/3/13

September 3, 2013

PROJECT NUMBER: 13015_.01

City of Portland
REVIEWED FOR CODE COMPLIANCE
SEP 05 2013
Permit Number

CIDA
ARCHITECTURE
ENGINEERING
PLANNING
INTERIORS
LANDSCAPE

15895 SW 72ND AVE
SUITE 200
PORTLAND, OR 97224
PHONE: 503.226.1285
FAX: 503.226.1670
INFO@CIDAINC.COM
WWW.CIDAINC.COM

MA1

USGS Design Maps Summary Report

User-Specified Input

Report Title Oregon Electric Group
Tue September 3, 2013 15:42:21 UTC

Building Code Reference Document ASCE 7-05 Standard
(which utilizes USGS hazard data available in 2002)

Site Coordinates 45.51051°N, 122.66332°W

Site Soil Classification Site Class D – "Stiff Soil"

Occupancy Category I/II/III

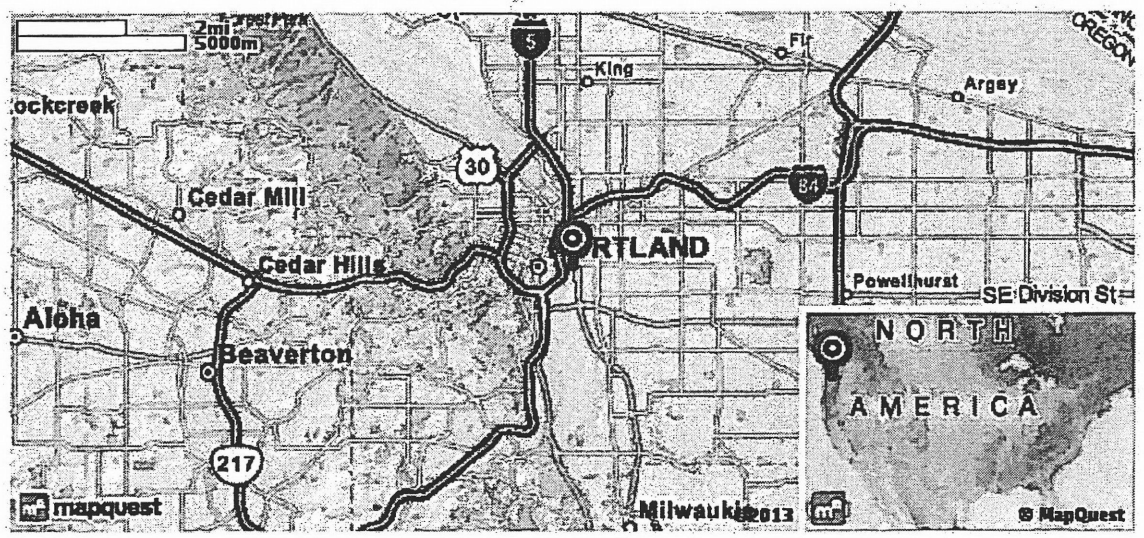

USGS-Provided Output

S_S =	0.987 g	S_{MS} =	1.091 g	S_{DS} =	0.727 g
S_1 =	0.344 g	S_{M1} =	0.589 g	S_{D1} =	0.393 g

MCE Response Spectrum

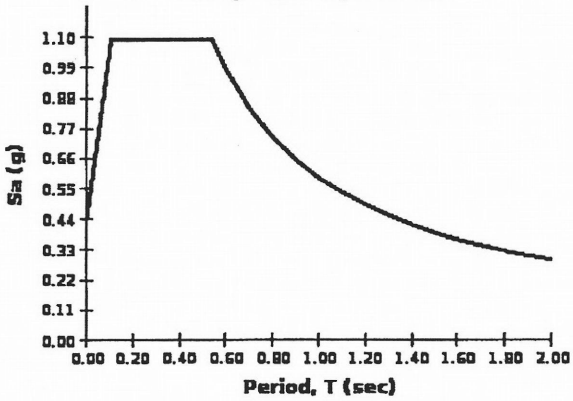

Design Response Spectrum

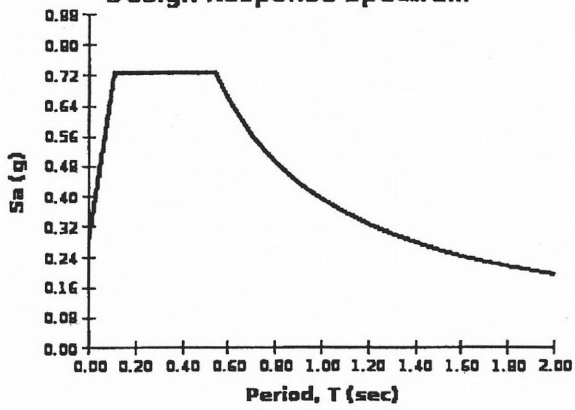

Although this information is a product of the U.S. Geological Survey, we provide no warranty, expressed or implied, as to the accuracy of the data contained therein. This tool is not a substitute for technical subject-matter knowledge.

CIDA
TEL: (503) 226-1285
FAX: (503)226 1670

cdg
9/3/2013
MAZ

MECHANICAL UNIT ATTACHMENT-LATERAL FORCES
Air handler Box Hung below roof framing

$W_p := 157lb + 25lb$ Weight of unit+ hanging accessories $L := 49in$ Length

$w_m := 21in$ Width of unit $h_m := 22.1 \cdot in$ Height of unit

SEISMIC PARTS AND PORTIONS

Portland, OR 97214

Mapped | Adjusted Maximum

$S_s := 0.987$ site class= D $F_a := 1.105$ $S_{ms} := F_a \cdot S_s$ $S_{ms} = 1.09$

$S_{DS} := \frac{2}{3} \cdot S_{ms}$ $S_{DS} = 0.727$

$h := 25$ $z := h$ $I_p := 1.0$

$a_p := 2.5$ $R_p := 6$ Values for air side HVAC per table 13.6-1 ASCE 7-05

$Fp := \frac{0.4 \cdot a_p \cdot S_{DS} \cdot I_p}{R_p} \cdot \left(1 + 2 \cdot \frac{z}{h}\right) \cdot W_p$ $Fp = 66.17lb$ $0.7 \cdot Fp = 46.32lb$ Total seismic

$F_{pmin} := 0.3 \cdot S_{DS} \cdot I_p \cdot W_p$ $F_{pmin} = 39.7lb$ $0.7 \cdot F_{pmin} = 27.79lb$ Total seismic

$0.2 \cdot S_{DS} \cdot W_p = 26.47lb$

E:\adcadd\13\2013 mechanical unit projects\Oregon Electric\lateral air handler.mcd

CIDA
TEL: (503) 226-1285
FAX: (503)226 1670

Mechanical unit Attachment
Air Handler Box below roof framing

cdg
9/3/2013
MA3

VERTICAL ATTACHMENT OF AIR HANDLER BOX TO UNDERSIDE OF ROOF FRAMING

$P_{corner} := \frac{W_p}{4}$ $\quad P_{corner} = 45.5\,lb$ Vertical load to corner support from dead load

$M_{ot} := Fp \cdot \frac{h_m}{2}$

$P_{seis} := \frac{M_{ot}}{w_m \cdot 2}$ $\quad P_{seis} = 17.41\,lb$ Vertical load to corner support from seismic overturning

ASD loads for attachment to unit 1.0dD+0.7E, 0.6D-0.7E

$P_1 := P_{corner} + 0.7\left(\frac{0.2S_{DS} \cdot W_p}{4} + P_{seis}\right)$ $\quad P_1 = 62.32\,lb$ Maximum vertical load

$P_2 := 0.6 \cdot P_{corner} - 0.7 \cdot \left(\frac{0.2 \cdot S_{DS} \cdot W_p}{4} + P_{seis}\right)$ $\quad P_2 = 10.48\,lb$ Minimum vertical load > 0 no compression in vertical support

Use 3/8" rods at unit for vertical hanging

LATERAL BRACING OF AIR HANDLER BOX

Box is braced by splay wires at 45degrees vertical and horizontal each corner (4) total.

$T_{wire} := \frac{Fp}{2} \cdot \sqrt{2} \cdot \sqrt{2}$ $\quad T_{wire} = 66.17\,lb$

ASD for attachment to unit (0.7E)

$T_{ASD} := T_{wire} \cdot 0.7$ $\quad T_{ASD} = 46.32\,lb$

$V_{ert_asd} := \frac{T_{ASD}}{\sqrt{2}}$ $\quad V_{ert_asd} = 32.75\,lb$ Vertical component of wire force

$H_{oriz_asd} := \frac{T_{ASD}}{\sqrt{2}}$ $\quad H_{oriz_asd} = 32.75\,lb$ horizontal component of wire force

Try (1) #10 SMS at box (20ga minimum)

$V_{allow} := 140lb$ $\quad T_{allow} := 66lb$

$U := \frac{V_{ert_asd}}{V_{allow}} + \frac{H_{oriz_asd}}{T_{allow}}$ $\quad U = 0.73$ <1.0 OK Use (1) #10 SMS at unit for wire attachment

Try 12ga wire

$A_{wire} := 0.0088in^2$ $\quad T_{allow_wire} := 0.9 \cdot A_{wire} \cdot 33000psi$ $\quad T_{allow_wire} = 261.36\,lb$

$U_{wire} := \frac{T_{ASD}}{T_{allow_wire}}$ $\quad U_{wire} = 0.18$ <1.0 OK Use #12 wire braces

E:\adcadd\13\2013 mechanical unit projects\Oregon Electric\lateral air handler.mcd

CIDA
ARCHITECTURE
ENGINEERING
PLANNING
INTERIORS
LANDSCAPE

15895 SW 72ND AVENUE, SUITE 200
PORTLAND, OREGON 97224
TEL: 503.226.1285 FAX: 503.226.1670
E-MAIL: info@cidainc.com

PROJECT NAME: _____ PROJ. NO. _____ SHEET MA4

TITLE: _____ BY: _____ DATE: _____

FRAMING CHECK DL = 13 PSF SL = 25 PSF

JOISTS @ 6'-0" O.C.

L = 22' W = (76 / 390 / 378 PLF)

EXISTING CONDITION

R_E = 411586

M_E = 22,187 FT K

W/ 160 LB MECH UNIT @ ℄

R = 423846 2% INCREASE < 5% OK

M = 23,754 FT K 3.8% INCREASE < 5% OK

(E) FRAMING IS ACCEPTABLE

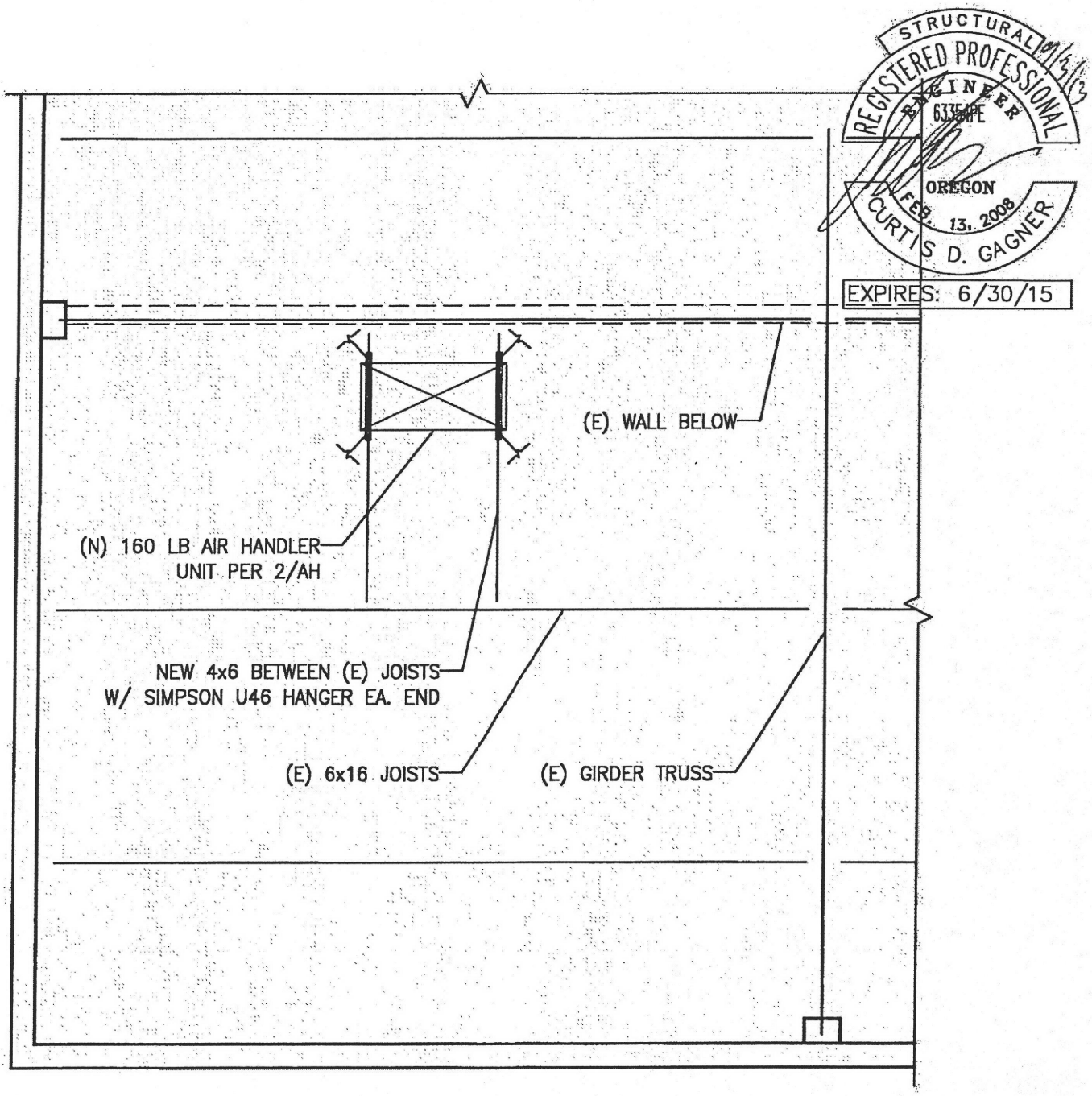

1 / AH AHU-1 UNIT FRAMING PLAN

1/4" = 1'-0"

CIDA
ARCHITECTURE ENGINEERING PLANNING INTERIORS LANDSCAPE
15895 SW 72ND AVE SUITE 200
PORTLAND, OREGON 97224
TEL: 503.226.1285
FAX: 503.226.1670

DRAWING TITLE: HVAC ATTACHMENT DETAIL	DRAWING: 1 / AH
PROJECT: OREGON ELECTRIC GROUP HVAC	
JOB: 1301--.01 DATE: 09.03.2013	

© 2013 CIDA, INC. ALL RIGHTS RESERVED

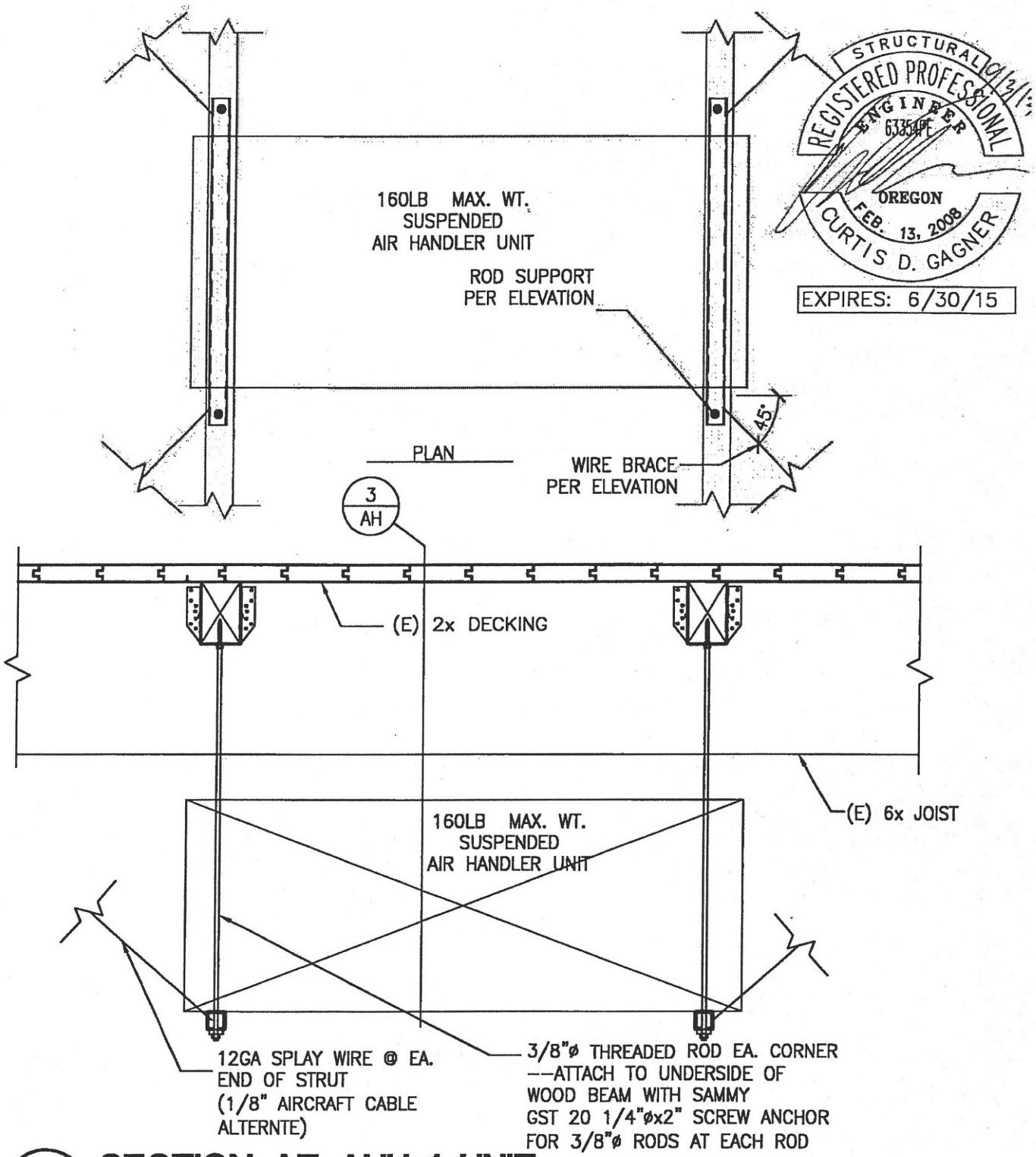

STRUCTURAL REGISTERED PROFESSIONAL ENGINEER 63354PE OREGON FEB. 13, 2008 CURTIS D. GAGNER

EXPIRES: 6/30/15

2/AH SECTION AT AHU-1 UNIT

1" = 1'-0"

CIDA
ARCHITECTURE ENGINEERING PLANNING INTERIORS LANDSCAPE
15895 SW 72ND AVE SUITE 200
PORTLAND, OREGON 97224
TEL: 503.226.1285
FAX: 503.226.1670

DRAWING TITLE: HVAC ATTACHMENT DETAIL	DRAWING: 2/AH
PROJECT: OREGON ELECTRIC GROUP HVAC	
JOB: 1301--.01 DATE: 09.03.2013	

© 2013 CIDA, INC. ALL RIGHTS RESERVED

STRUCTURAL REGISTERED PROFESSIONAL ENGINEER 63354PE OREGON FEB. 13, 2008 CURTIS D. GAGNER

9/4/13

EXPIRES: 6/30/15

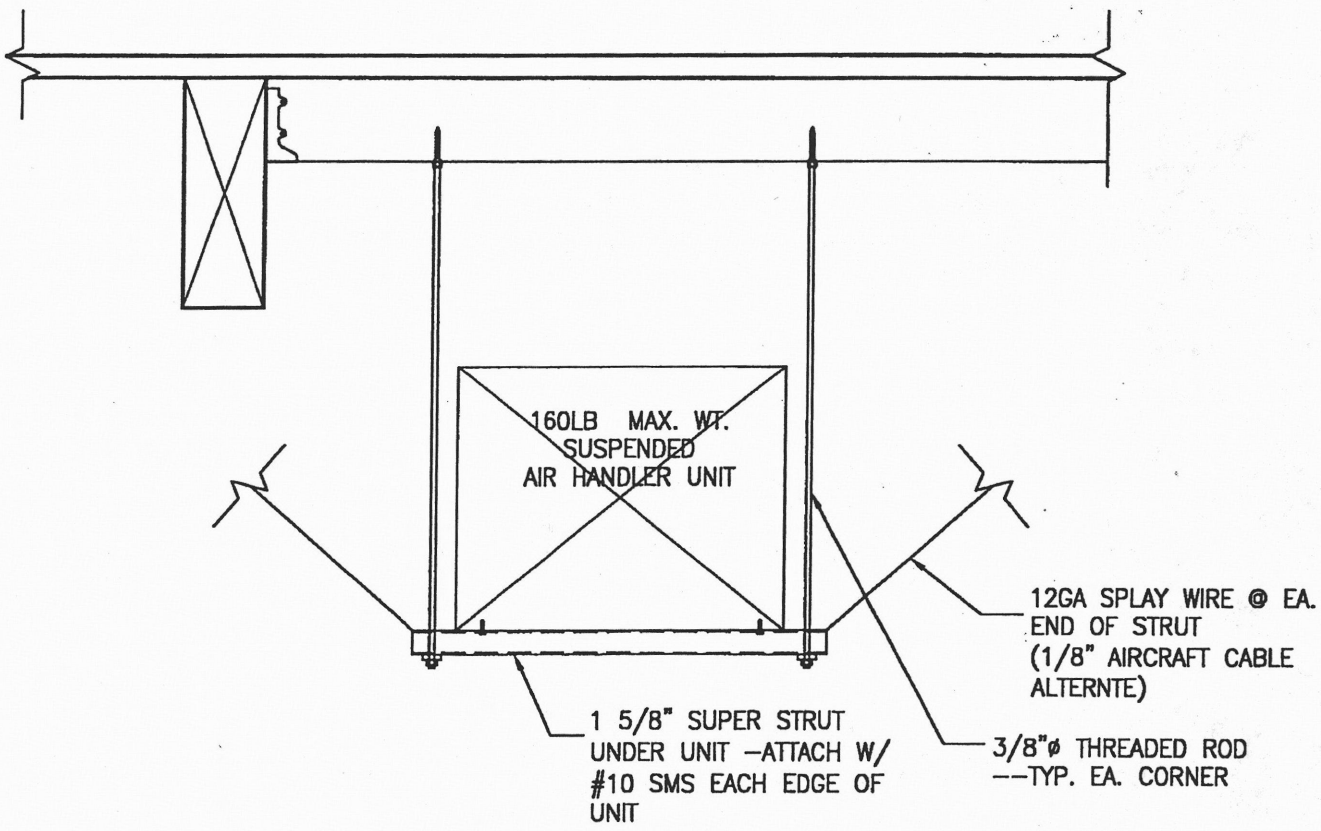

3 / AH AIR HANDLER UNIT AT WOOD FRAMING

1" = 1'–0"

CIDA
ARCHITECTURE ENGINEERING PLANNING INTERIORS LANDSCAPE

15895 SW 72ND AVE SUITE 200
PORTLAND, OREGON 97224
TEL: 503.226.1285
FAX: 503.226.1670

DRAWING TITLE: HVAC ATTACHMENT DETAIL	DRAWING: 3 / AH
PROJECT: OREGON ELECTRIC GROUP HVAC	
JOB: 1301--.01 DATE: 09.03.2013	

© 2013 CIDA, INC. ALL RIGHTS RESERVED

2010 OREGON MECHANICAL SPECIALTY CODE VENTILATION CHART

SYSTEM TAG	ROOM OR ZONE NAME	TYPE	AREA SQFT	PEOPLE RATE Rp CFM/PERSON	AREA RATE Ra CFM/SQFT	DEFAULT OCCUPANT DENSITY PEOPLE / 1000 SQFT	TOTAL POPULATION PEOPLE	EXHAUST RATE CFM/SQFT	BREATHING ZONE OSA Voz CFM	DISTRIBUTION EFFECTIVENESS Ez RATIO	ZONE OSA REQUIRED Voz CFM	ZONE OSA PROVIDED Voz CFM	EXHAUST DISTRIBUTION EFFECTIVNESS RATIO	ZONE EXHAUST REQUIRED CFM	ZONE EXHAUST PROVIDED CFM	ZONE TRANSFER AIRFLOW CFM	NOTES
AHU-1		HEALTH CLUB/WEIGHT ROOM	425	20.0	0.06	10	5	-	126	0.8	157	550	-	-	-	-	1
		TOILET ROOMS - PUBLIC	100	-	-	-	-	50/10	-	-	-	-	1.0	100	100	100	3
		TOILET ROOMS - PUBLIC	100	-	-	-	-	50/10	-	-	-	-	1.0	100	100	100	3
		TOILET ROOMS - PUBLIC	165	-	-	-	-	50/10	-	-	-	-	1.0	150	150	150	3
		TOILET ROOMS - PUBLIC	165	-	-	-	-	50/10	-	-	-	-	1.0	200	200	200	3
				-	-	-	-	-	-	-	-	-	-	-	-	-	1

NOTES:
1. COMPLIES WITH 2010 OMSC SECTION 403
2. 50% OCCUPANT REDUCTION ALLOWED VIA 2010 OMSC SECTION 403.3
3. TRANSFER AIR SUPPLIED IN ACCORDANCE WITH 2010 OMSC SECTION 403.2.2

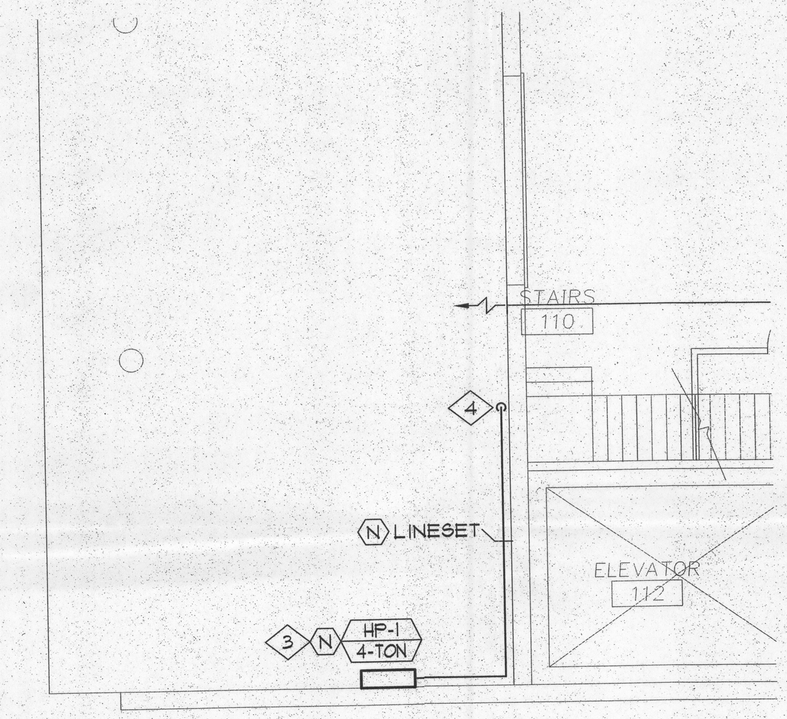

1 M201 FIRST FLOOR HVAC LAYOUT PLAN
SCALE: 1/4" = 1'-0"

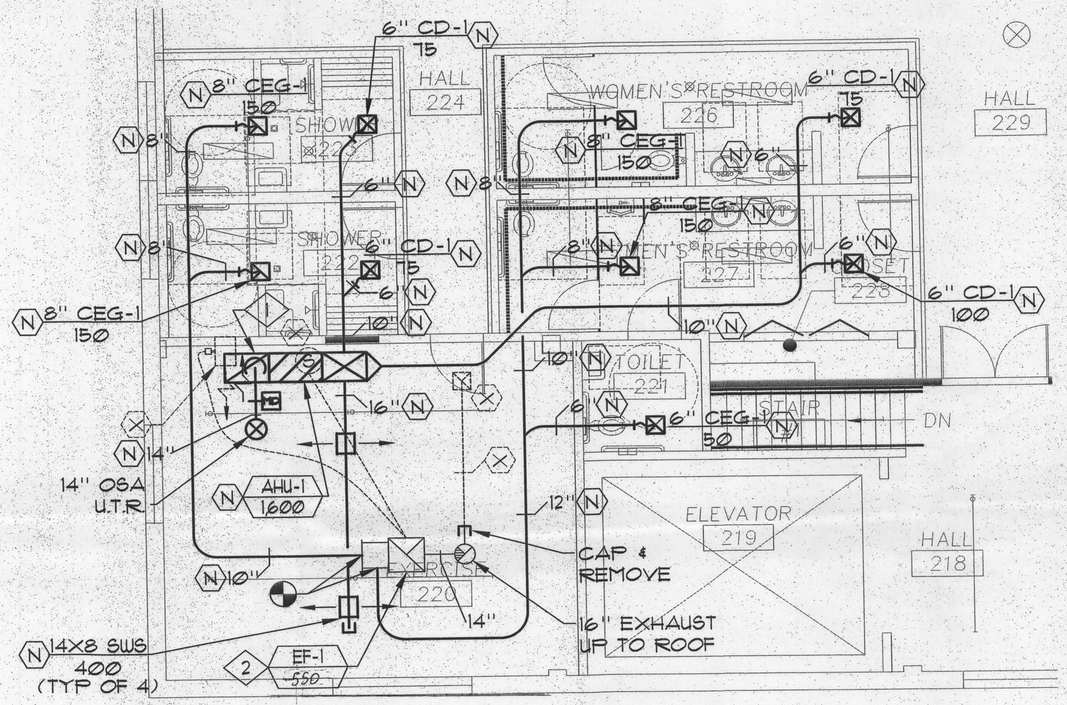

2 M201 SECOND FLOOR HVAC LAYOUT PLAN
SCALE: 1/4" = 1'-0"

KEYED NOTES

1. INSTALL 20X20 WIRE MESH SCREEN ON THE TOP SIDE OF PLENUM. INSTALL DAMPER TO BALANCE OSA.
2. EXISTING EF-1 - INTERLOCK FAN W/ THERMOSTAT TO OPERATE DURING OCCUPIED HOURS.
3. MOUNT ON WALL AS HIGH AS POSSIBLE.
4. UTILIZE EXISTING HOLE / CORE UP THRU THE MAIN FLOOR FOR REFRIGERANT PIPING.

GRILLE SCHEDULE

CD-1 = TITUS MCD-BORDER (TYP. OF 6)

CEG-1 = TITUS PAR SURFACE MOUNT (12X12 FACE 10X10 NECK)

SWS = TITUS 300

LEGEND

CD	CEILING DIFFUSER - T-BAR
CD-1	CEILING DIFFUSER - SURFACE MOUNT
CRG	CEILING RETURN GRILLE - T-BAR
CRG-1	CEILING RETURN GRILLE - SURFACE MOUNT
CEG	CEILING EXHAUST GRILLE - T-BAR
CEG-1	CEILING EXHAUST GRILLE - SURFACE MOUNT
CTG	CEILING TRANSFER GRILLE - T-BAR
CTG-1	CEILING TRANSFER GRILLE - SURFACE MOUNT
SWT	SIDE WALL TRANSFER GRILLE
SWS	SIDE WALL SUPPLY
SWR	SIDE WALL RETURN
SWE	SIDE WALL EXHAUST
SD	SLOT DIFFUSER - T-BAR
SD-1	SLOT DIFFUSER - SURFACE MOUNT
FSG	FLOOR SUPPLY GRILLE
FRG	FLOOR RETURN GRILLE
TOD	TOP OF DUCT
BOD	BOTTOM OF DUCT
S/A	SUPPLY AIR
R/A	RETURN AIR
E/A	EXHAUST AIR
VTR	VENT THROUGH ROOF
TJS	THROUGH JOIST SPACE
A.F.F.	ABOVE FINISHED FLOOR
B.F.C.	BELOW FINISHED CEILING
	SUPPLY DUCT/DIFFUSER GRILLE
	RETURN DUCT/DIFFUSER GRILLE
	EXHAUST DUCT/DIFFUSER GRILLE
SIZE CFM	DIFFUSER & GRILLE CALL OUT
CALL OUT CFM/HSP	EQUIPMENT CALL OUT
	CONNECT TO EXISTING
SD	SMOKE DETECTOR
SD	SMOKE DAMPER
MD	MOTORIZED DAMPER
E	EXISTING TO REMAIN
R	RELOCATE
X	REMOVE
N	NEW
	FIRE DAMPER - FD
	FIRE SMOKE DAMPER - FSD
	VOLUME CONTROL DAMPER - VD
S	SENSOR
T	THERMOSTAT
G	GAS PIPING
	DUCT WITH LINER
	DUCT WITH LINER
	NEW LINE TYPE - TYPICAL
	EXISTING LINE TYPE - TYPICAL
	DEMO LINE TYPE - TYPICAL
	RETURN AIR BALANCE TAG
	SUPPLY AIR BALANCE TAG
	EXHAUST AIR BALANCE TAG

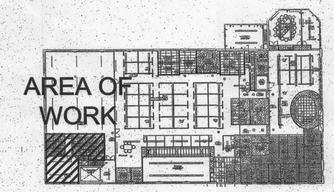

3 M201 KEY PLAN
SCALE: 1/4" = 1'-0"

8-29-13
PERMIT SET

THIS DRAWING IS THE EXCLUSIVE PROPERTY OF AMERICAN HEATING INC. THE REPRODUCTION, IN WHOLE OR IN PART, OR USE OF THE DESIGN SHOWN THEREON WITHOUT THE WRITTEN PERMISSION OF AMERICAN HEATING INC. IS PROHIBITED. THE REPRODUCTION OF THE ORIGINAL OR COPIES THEREOF DOES NOT CONSTITUTE A PUBLICATION.

THESE DRAWINGS OR BLUEPRINTS ARE SUBMITTED TO YOU SOLELY FOR THE PURPOSE OF OBTAINING A BUILDING PERMIT. ANY COMMUNICATION OF THIS DESIGN WITHOUT THE CONSENT OF AMERICAN HEATING INC. CONSTITUTES A VIOLATION OF THE LAWS OF THIS STATE.

	DATE	DRAWING REVISION NOTES

INITIALS: DATE: INITIALS: DATE:
QUALITY CONTROL CHECKING DONE BY:

SEP 13 2013
Permit Number 13-177

SECOND FLOOR HVAC LAYOUT PLAN
OREGON ELECTRIC GROUP BLDG.
1709 SE 3RD AVENUE
PORTAND, OREGON
97214

American Heating, Inc.
5035 S.E. 24TH AVENUE
PORTLAND, OREGON 97202-4765
TELEPHONE (503) 239-4600 FAX (503) 239-7038

JOB START DATE: 8/26/13
DESIGNED BY: A. WARE
JOB SET UP BY: J. LOVELL
JOB NO. 134004
SHT. NO. M201
SHEETS IN SET 1 OF 1

J:\2009\Earl-709xxx\Oregon Electric Group Bldg\Dwgs\709121M201.dwg August 03 2009 12:18pm By:Jess