Scan

GENERAL NOTES
INTERIOR T-BAR CEILING FRAMING

GENERAL

1. VERIFY DESIGN CRITERIA (BELOW) AND DIMENSIONS PER DRAWINGS.
2. DEVCO ENGINEERING, INC'S SCOPE OF WORK IS LIMITED TO THOSE ITEMS SHOWN ON OUR SEALED DRAWINGS. DESIGN OF ALL OTHER ITEMS IS BY OTHERS.

DESIGN CRITERIA

CEILING DEAD LOAD:	2PSF ACOUSTICAL INLAY TILE
CEILING LIVE LOAD:	0 (NON ACCESSIBLE)
SEISMIC LOAD:	2010 OSSC & 2009 IBC: OCCUPANCY 1, SITE CLASS D,
	S_1 = 1.47, S_{ds} = 1.08, I_p = 1.5, a_p = 1.0, R_p = 2.5
DEFLECTION LIMIT:	L/360

MATERIALS

1. STUD TRACK AND MISC. SHAPES TO BE MANUFACTURED FROM STEEL MEETING THE REQUIREMENTS OF ASTM A653, SS GRADE 33 FOR 43-MIL AND LIGHTER PRODUCTS AND ASTM A653, SS GRADE 50 FOR 54-MIL AND HEAVIER.
2. DESIGN BASED ON SECTION PROPERTIES FROM ICBO ER NO. 4943-P (SSMA). OTHER MANUFACTURES ARE ACCEPTABLE PROVIDING PROVISION 1 ABOVE IS MET AND SECTION PROPERTIES MEET OR EXCEED THE ABOVE LISTED ICBO ER.
3. PROVIDE PERIMETER SUPPORTING CLOSURE ANGLES PER ASCE7-05 13.5.6.2.2. INSTALL ALL CEILINGS IN ACCORDANCE WITH ASCE 7-05 13.5.6.2 AND ASTM C635 AND C636.
4. WIRE TO BE GALVANIZED SOFT ANNEALED MILD STEEL WIRE AS DEFINIED IN ASTM A641. USE A MINIMUM OF THREE TWISTS WITHIN 1½" LENGTH AT ENDS OF HANGER WIRE.
5. SCREWS USED IN DESIGN MEET THE REQUIREMENTS OF SECTION E4 OF THE 2001 EDITION OF THE AISI "NORTH AMERICAN SPECIFICATION FOR THE DESIGN OF COLD FORMED STEEL STRUCTURAL MEMBERS" FOR SCREW CONNECTIONS.
6. LVF - RAMSET SDC 125 (ICC ESR - 1799). SIZE AND EMBEDMENT PER DRAWINGS. EDGE DISTANCE AND O.C. SPACING PER ICC ESR OR AS INDICATED ON DRAWINGS. INSTALL IN ACCORDANCE WITH THE LISTED ICC ESR AND THE MANUFACTURER'S RECOMMENDATIONS.
7. LVF - HILTI X-CW X-U27 (ICC ESR-2892). SIZE AND EMBEDMENT PER DRAWINGS. EDGE DISTANCE AND O.C. SPACING PER ICC ESR OR AS INDICATED ON DRAWINGS. INSTALL IN ACCORDANCE WITH THE LISTED ICC ESR AND THE MANUFACTURER'S RECOMMENDATIONS.
8. LVF - HILTI X-U (ICC ESR-2269). SIZE AND EMBEDMENT PER DRAWINGS. EDGE DISTANCE AND O.C. SPACING PER ICC ESR OR AS INDICATED ON DRAWINGS. INSTALL IN ACCORDANCE WITH THE LISTED ICC ESR AND THE MANUFACTURER'S RECOMMENDATIONS.
9. LVF - POWERS RAMSET 1500 (ICC ESR-1799). SIZE AND EMBEDMENT PER DRAWINGS. EDGE DISTANCE AND O.C. SPACING PER ICC ESR OR AS INDICATED ON DRAWINGS. INSTALL IN ACCORDANCE WITH THE LISTED ICC ESR AND THE MANUFACTURER'S RECOMMENDATIONS.
10. SCREW ANCHOR - HILTI HUS-EZ (ICC ESR-3027). SIZE AND EMBEDMENT PER DRAWINGS. EDGE DISTANCE AND O.C. SPACING PER ICC ESR OR AS INDICATED ON DRAWINGS. INSTALL IN ACCORDANCE WITH THE LISTED ICC ESR AND THE MAUFACTURER'S RECOMMENDATIONS.

Install w/ approved fasteners and locations per approved structural calcs.
Install per manufacturer's requirements for Seismic Category 'D'
(attached as part of submittal)

City of Portland
REVIEWED FOR CODE COMPLIANCE
JUL 01 2013
11-152191 DFS 08 CO
Permit Number

RECEIVED
JUN 19 2013
BDS
DOCUMENT SERVICES

REVIEWED
☐ NO EXCEPTIONS NOTED
☒ IMPLEMENT AS NOTED
☐ REVISE AND RESUBMIT
☐ REJECTED

This conditional review is limited in scope and not detailed and is only for conformance with the visual design concept set forth in the Contract Documents. The Contractor is responsible for confirming quantities and quality, verifying dimensions, selecting fabrication procedures and construction techniques, coordinating, and safely performing the work. The Architect has not reviewed and is not responsible for substitutions to or deviations from the Contract Documents not clearly noted by the Contractor and specifically accepted by the Architect in writing.

By: Margaux Davis
Date 11/09/12
MICHAEL WILLIS ARCHITECTS

REGISTERED PROFESSIONAL ENGINEER 8861 OREGON JULY 30, 1976 ALLAN J. SCHONEMER
EXPIRES 6/30/14

DRAWING STATUS:	DATE:
☐ PRELIMINARY	
☒ SUBMITTED	07/26/12
☐ BID SET	
☐ PERMIT SET	
☐ CONST. SET	

No.	REVISION:	DATE:

DEVCO engineering inc.
245 NW CONNELL, P.O. BOX 181
CORVALLIS, OR. 97339
WWW.DEVCOENGINEERING.COM
(541) 757-1944

© COPYRIGHT 2012
DEVCO ENGINEERING, INC.
ALL RIGHTS RESERVED.

PROJECT: PORTLAND EMERGENCY COORDINATION CENTER
PROJECT LOCATION: PORTLAND, OR.
CLIENT: WESTERN PARTITIONS, INC.

JOB NO.	12-662
DRAWN BY:	DEVCO
SHEET TITLE:	GENERAL NOTES
DRAWING:	SK 0

11-152191 DFS 08 CO

FILE: J:\12\12662 Portland Emergency Center\SK0.dwg 7/26/2012 4:10 PM - Ben

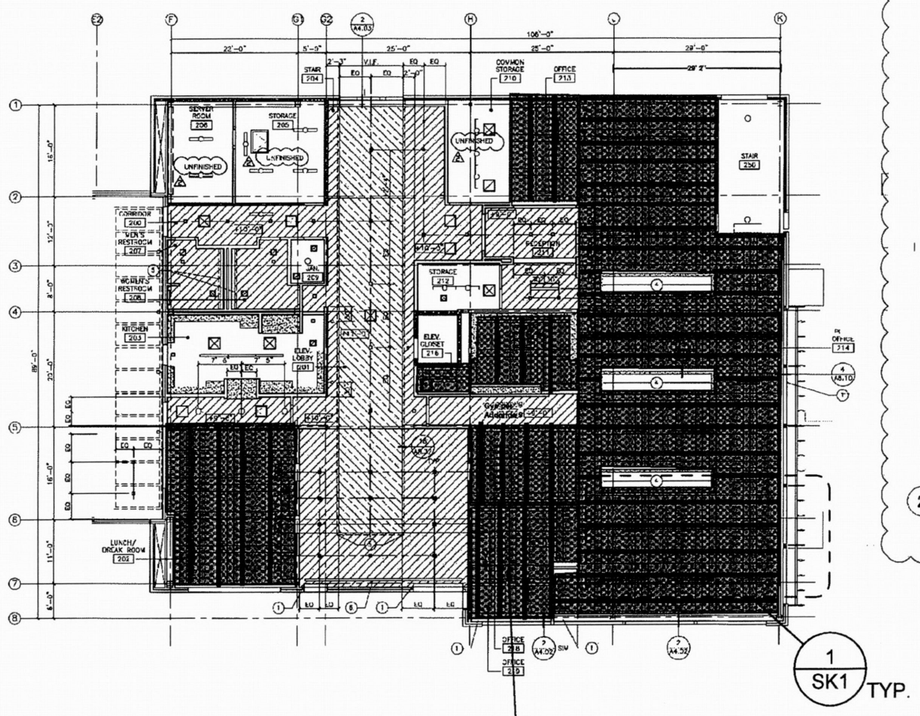

HATCHED AREA IS SUSPENDED ACOUSTICAL INLAY TILE CEILING TYP.

1 SECOND FLOOR REFLECTED CEILING/ LIGHTING PLAN
SCALE 1/8"=1'-0"

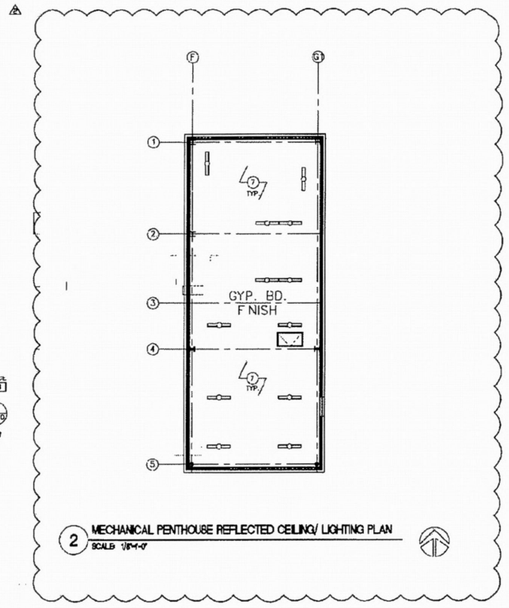

2 MECHANICAL PENTHOUSE REFLECTED CEILING/ LIGHTING PLAN
SCALE 1/8"=1'-0"

RECEIVED
JUN 19 2013
BDS
DOCUMENT SERVICES

SHEET GENERAL NOTES

1. DIMENSIONS ARE TO GRIDLINE, OUTSIDE FACE OF STUD AND CENTERLINE OF FIXTURES, U.N.O.
2. SEE ENLARGED PARTIAL PLANS FOR ADDITIONAL WALL TYPE AND DIMENSIONAL INFORMATION.
3. SEE ENLARGED PARTIAL PLANS FOR DOOR AND WALL TYPES.
4. MECHANICAL, ELECTRICAL, AND PLUMBING SUBCONTRACTORS TO COMPLY W/ FIRE BLOCKING AND FIRE STOPPING REQUIREMENTS AT ALL PENETRATIONS OF RATED WALL, FLOOR/ CEILING, AND ROOF/ CEILING ASSEMBLIES.
5. SEE EXTERIOR ELEVATIONS FOR WINDOW TYPES.
6. SEE ELECTRICAL FOR LIGHTING SPECIFICATIONS AND ADDITIONAL INFORMATION.
7. LIGHT FIXTURES TO BE CENTERED IN ROOM/ AREA AND EQUALLY SPACED AS SHOWN, U.N.O.

KEYNOTES

1. LOCATION OF RECESSED WINDOW SHADE POCKET
2. NOT USED
3. LIGHT MONITOR, TYP.
4. SKYLIGHT, REFER TO DETAIL 15/A8.02 FOR ADDITIONAL INFORMATION
5. COVE LIGHTING
6. LINEAR DIFFUSER. SEE MECHANICAL FOR ADDITIONAL INFORMATION
7. APPLY 5/8" TYPE 'X' GYP. BD. TIGHT TO UNDERSIDE OF ROOF DECKING. FIRE WRAP BEAMS PER 6/A0.05. FIRE CAPE ALL SEAMS AND EDGES.

LEGEND

- 1 HR RATED WALL. SEE ENLARGED PLANS FOR WALL TYPES
- TYPICAL 6"+- 3D. CEILING HEIGHT AT 9'-6" AFF (10'-0" AT SECOND FLOOR), U.N.O
- TYPICAL DROPPED GYP. BD. CEILING HEIGHT AT 9'-0" AFF (10'-3" AT SECOND FLOOR), U.N.O.
- GYP. BD. SOFFIT, SEE INTERIOR ELEVATIONS FOR HEIGHT AFF.
- ACOUSTIC PLASTER SYSTEM AT COVED CEILING, SEE DETAIL 12/A6.30, DETAIL 15/A8.02 AND SPECIFICATIONS FOR ADDITIONAL INFORMATION
- LINEAR SUPPLY AIR DIFFUSER. SEE MECHANICAL FOR ADDITIONAL INFORMATION
- LINEAR RETURN AIR DIFFUSER. SEE MECHANICAL FOR ADDITIONAL INFORMATION
- ACOUSTIC CEILING TILE AND GRID, SEE DETAIL 9/A0.04 AND SPECIFICATIONS
- SUPPLY GRILL. SEE MECHANICAL FOR ADDITIONAL INFORMATION
- RETURN GRILL. SEE MECHANICAL FOR ADDITIONAL INFORMATION
- CEILING ACCESS HATCH. SEE SPECIFICATIONS
- UNFINISHED NO CEILING FINISHES REQUIRED

LIGHTING LEGEND

- 4" RECESSED LIGHT
- 6" RECESSED LIGHT
- 6" RECESSED WALL WASH LIGHT
- 12" SURFACE MOUNTED FIXTURE
- 5'-0" RECESSED LINEAR FIXTURE
- 4'-0" LINEAR FLUORESCENT COVE LIGHT
- SURFACE-MOUNTED LINEAR FIXTURE

City of Portland
REVIEWED FOR CODE COMPLIANCE
JUL 01 2013
Permit Number

REVIEWED
- [x] NO EXCEPTIONS NOTED
- [ ] IMPLEMENT AS NOTED
- [ ] REVISE AND RESUBMIT
- [ ] REJECTED

This conditional review is limited in scope and not detailed and is only for conformance with the visual design concept set forth in the Contract Documents. The Contractor is responsible for confirming quantities and quality, verifying dimensions, selecting fabrication procedures and construction techniques, coordinating, and safety performing the work. The Architect has not reviewed and is not responsible for substitutions to or deviations from the Contract Documents not clearly noted by the Contractor and specifically accepted by the Architect in writing.

By: J. STEIN
Date: 06.18.2013
MWA ARCHITECTS

REGISTERED PROFESSIONAL ENGINEER 77674PE OREGON DEC. 12, 2012 BENJAMIN PRUETT
EXPIRES 12/31/14

DRAWING STATUS:	DATE:
[ ] PRELIMINARY	
[x] SUBMITTED	5/30/13
[ ] BID SET	
[ ] PERMIT SET	
[ ] CONST. SET	

No.	REVISION:	DATE:

DEVCO engineering inc.
Corvallis Oregon (541) 757-8991
345 NW CONIFER, P.O. BOX 1211
CORVALLIS, OR 97339
WWW.DEVCOENGINEERING.COM
© COPYRIGHT 2013
DEVCO ENGINEERING, INC.
ALL RIGHTS RESERVED.

PROJECT: PORTLAND EMERGENCY COORDINATION CENTER
PROJECT LOCATION: PORTLAND, OR
CLIENT: WESTERN PARTITIONS

JOB NO. 12-662
DRAWN BY: DEVCO
SHEET TITLE: RCP
DRAWING: SK 0.2

FILE: J:\12\12662 Portland Emergency Center\SK0.2.dwg 6/10/2013 11:45 AM – Ben

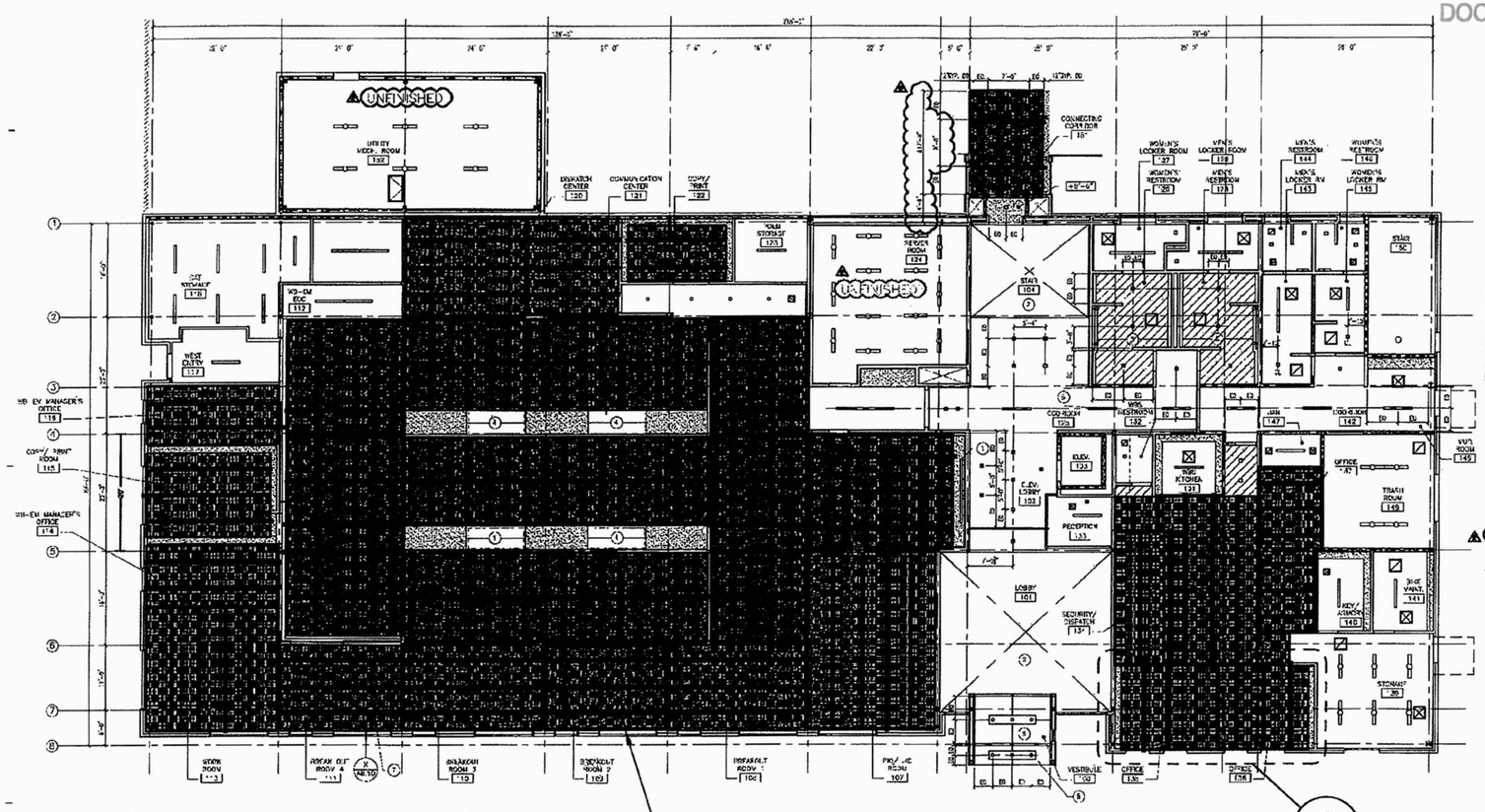

1 GROUND FLOOR REFLECTED CEILING/ LIGHTING PLAN
SCALE 1/8"=1'-0"

HATCHED AREA IS SUSPENDED ACOUSTICAL INLAY TILE CEILING TYP.

RECEIVED
JUN 19 2013
BDS
DOCUMENT SERVICES

KEYNOTES

1. MOTORIZED RECESSED PROJECTION SCREEN
2. OPEN TO ABOVE
3. LIGHT MONITOR
4. SKYLIGHT, REFER TO DETAIL 15/A2.03 FOR ADDITIONAL INFORMATION.
5. COVE LIGHTING
6. ALIGN
7. RECESSED POCKET SHADE TYPICAL AT BREAKOUT ROOMS/ HOVIC ROOM
8. EXTERIOR WALL CLADDING & CEILING FINISH IN VESTIBULE. COORD. PANEL JOINTS W/ WALL PANELS.
9. COORD. LOCATION OF SPRINKLER HEADS TOOOL FOR CONNECTING CORRIDOR (DEFINED AS PEDESTRIAN WALKWAY). SEE FIRE PROTECTION SPECIFICATIONS FOR ADD. INFO.
10. CEILING MOUNTED PROJECTOR, SEE TECHNOLOGY FOR ADDITIONAL INFORMATION.

LEGEND

- 1 HR RATED WALL, SEE ENLARGED PLANS FOR WALL TYPES
- TYPICAL GYP. BD. CEILING HEIGHT AT 9'-6" AFF (10'-0" AT SECOND FLOOR), U.N.O.
- TYPICAL DROPPED GYP. BD. CEILING HEIGHT AT 8'-0" AFF (10'-0" AT SECOND FLOOR), U.N.O.
- GYP. BD. SOFFIT, SEE INTERIOR ELEVATIONS FOR HEIGHT AFF.
- LINEAR SUPPLY AIR DIFFUSER, SEE MECHANICAL FOR ADDITIONAL INFORMATION
- LINEAR RETURN AIR DIFFUSER, SEE MECHANICAL FOR ADDITIONAL INFORMATION
- ACOUSTIC CEILING TILE AND GRID, SEE DETAIL 9/A0.04 AND SPECIFICATIONS
- SUPPLY GRILL, SEE MECHANICAL FOR ADDITIONAL INFORMATION
- RETURN GRILL, SEE MECHANICAL FOR ADDITIONAL INFORMATION
- CEILING ACCESS HATCH, SEE SPECIFICATIONS
- UNFINISHED W/ CEILING FINISHES REQUIRED

LIGHTING LEGEND

- 6" RECESSED LIGHT
- 8" RECESSED LIGHT
- 8" RECESSED WALL WASH LIGHT
- 12" SURFACE MOUNTED FIXTURE
- 4'-0" RECESSED LINEAR FIXTURE
- 4'-0" LINEAR FLUORESCENT COVE LIGHT
- 8'-0" LINEAR FLUORESCENT FIXTURE
- SURFACE-MOUNTED LINEAR FIXTURE

REGISTERED PROFESSIONAL ENGINEER
77674PE
OREGON
DEC. 12, 2012
BENJAMIN PRUETT
EXPIRES 12/31/14

DRAWING STATUS:	DATE:
☐ PRELIMINARY	
☒ SUBMITTED	5/30/13
☐ BID SET	
☐ PERMIT SET	
☐ CONST. SET	

No.	REVISION:	DATE:

City of Portland
REVIEWED FOR CODE COMPLIANCE
JUL 01 2013
Permit Number

REVIEWED
☒ NO EXCEPTIONS NOTED
☐ IMPLEMENT AS NOTED
☐ REVISE AND RESUBMIT
☐ REJECTED

This conditional review is limited in scope and not detailed and is only for conformance with the visual design concept set forth in the Contract Documents. The Contractor is responsible for confirming quantities and quality, verifying dimensions, selecting fabrication procedures and construction techniques, coordinating, and safety performing the work. The Architect has not reviewed and is not responsible for substitutions to or deviations from the Contract Documents not clearly noted by the Contractor and specifically accepted by the Architect in writing.

By: J. STEIN
Date: 06-18-2013
MWA ARCHITECTS

DEVCO engineering inc.
Corvallis Oregon
(541) 757-1881
245 NW CONNER, P.O. BOX 1211
CORVALLIS, OR 97339
WWW.DEVCOENGINEERING.COM
© COPYRIGHT 2013
DEVCO ENGINEERING, INC.
ALL RIGHTS RESERVED.

PROJECT: PORTLAND EMERGENCY COORDINATION CENTER
PROJECT LOCATION: PORTLAND, OR
CLIENT: WESTERN PARTITIONS

JOB NO. 12-662
DRAWN BY: DEVCO
SHEET TITLE: RCP
DRAWING: SK 0.1

FILE: J:\12\12662 Portland Emergency Center\SK0.1.dwg 5/30/2013 4:28 PM - Ben

Install w/ approved fasteners and locations per approved structural calcs.
Install per manufacturer's requirements for Seismic Category 'D'
(attached as part of submittal)
See Detail 9/A0.04 for additional info.

NOTES:

1. FRAMING & INSTALLATION TO COMPLY WITH ICC REPORT ESR-1308.
2. SEISMIC SPLAY WIRES & COMPRESSION POSTS ARE REQ'D FOR CEILING AREA GREATER THAN 144 SQUARE FEET, SEE DETAIL 2/-. CEILINGS SURROUNDED ON ALL (4) SIDES BY FULL HEIGHT WALLS WITH A CEILING AREA OF 144 SQUARE FEET OR LESS ARE EXEMPT FROM SEISMIC BRACING REQ'S.

REGISTERED PROFESSIONAL ENGINEER 8851 OREGON JULY 30, 1976 ALLAN J. SCHOENER
EXPIRES 6/30/14

DRAWING STATUS:	DATE:
☐ PRELIMINARY	
☒ SUBMITTED	07/26/12
☐ BID SET	
☐ PERMIT SET	
☐ CONST. SET	

No.	REVISION:	DATE:

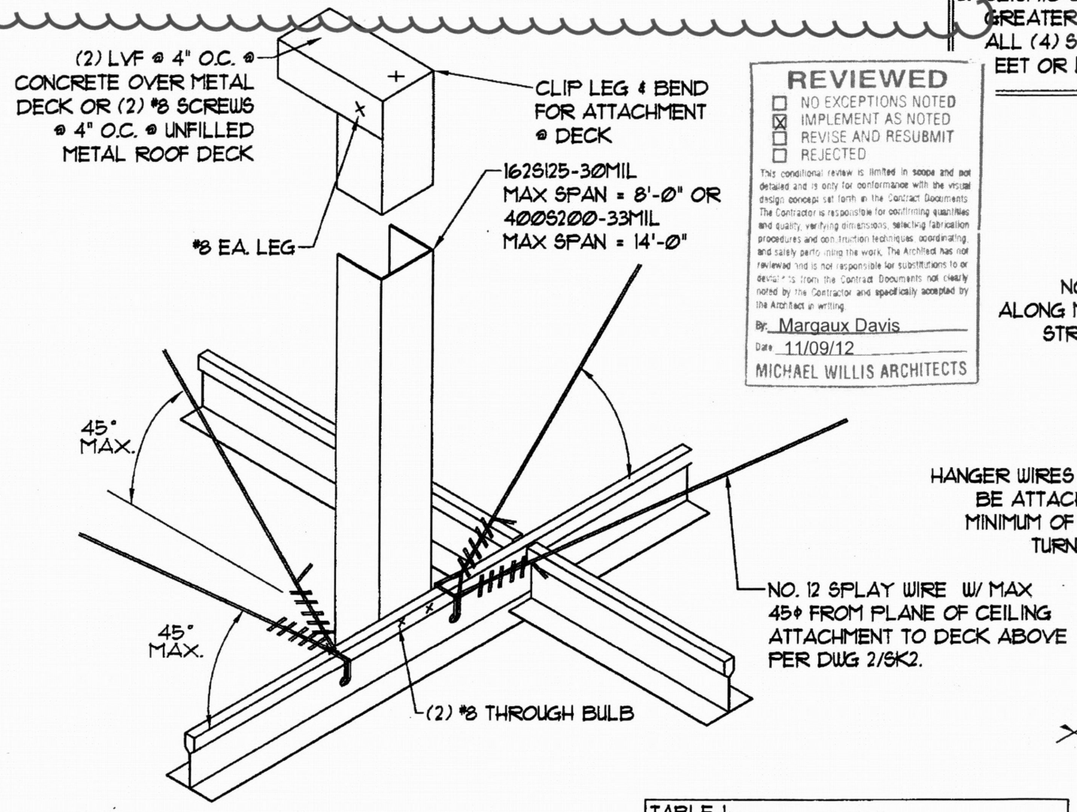

REVIEWED
☐ NO EXCEPTIONS NOTED
☒ IMPLEMENT AS NOTED
☐ REVISE AND RESUBMIT
☐ REJECTED

This conditional review is limited in scope and not detailed and is only for conformance with the visual design concept set forth in the Contract Documents. The Contractor is responsible for confirming quantities and quality, verifying dimensions, selecting fabrication procedures and construction techniques, coordinating, and safely performing the work. The Architect has not reviewed and is not responsible for substitutions to or deviations from the Contract Documents not clearly noted by the Contractor and specifically accepted by the Architect in writing.

By: Margaux Davis
Date: 11/09/12
MICHAEL WILLIS ARCHITECTS

NOTE: INSTALL SPLAY WIRES @ MAX 12'-0" X 10'-0" GRID OR MAX TRIBUTARY AREA = 120 SQUARE FEET TYP, & MAX 6'-0" FROM ANY EDGE OR ELEVATION CHANGE.

TABLE 1:	
MAIN RUNNER	SPACING MAX (IN)
INTERLUDE XL6101	48" O.C.
TABLE 2:	
CROSS TEES	SPACING MAX (IN)
INTERLUDE XL6120	72" O.C.
INTERLUDE XL6140	84" O.C.

2 SPLAY WIRE & COMPRESSION POST DETAIL
SCALE: N.T.S.

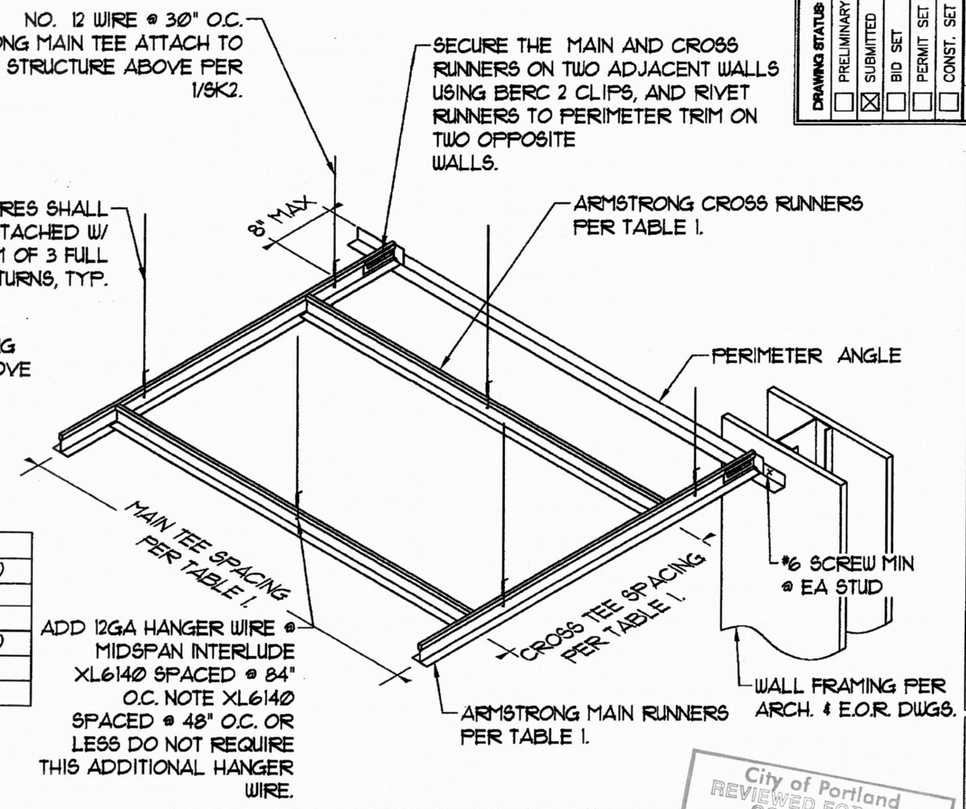

1 WOOD / ACOUSTICAL INLAY TILE SUSPENDED CEILING GRID SYSTEM
SCALE: N.T.S.

City of Portland
REVIEWED FOR CODE COMPLIANCE
JUL 01 2013
Permit Number

DEVCO engineering inc.
Corvallis Oregon (541) 757-8991
245 NE CONIFER, P.O. BOX 1211
CORVALLIS, OR 97339
WWW.DEVCOENGINEERING.COM

© COPYRIGHT 2012
DEVCO ENGINEERING, INC.
ALL RIGHTS RESERVED.

PROJECT: PORTLAND EMERGENCY COORDINATION CENTER
PROJECT LOCATION: PORTLAND, OR.
CLIENT: WESTERN PARTITIONS INC.

JOB NO. 12-662
DRAWN BY: DEVCO
SHEET TITLE: CONNECTION DETAILS
DRAWING: SK 1

FILE: J:\12\12662 Portland Emergency Center\SK1.dwg 7/26/2012 4:10 PM - Ben

Install w/ approved fasteners and locations per approved structural calcs.
Install per manufacturer's requirements for Seismic Category 'D'
(attached as part of submittal)
See Detail 9/A0.04 for additional info.

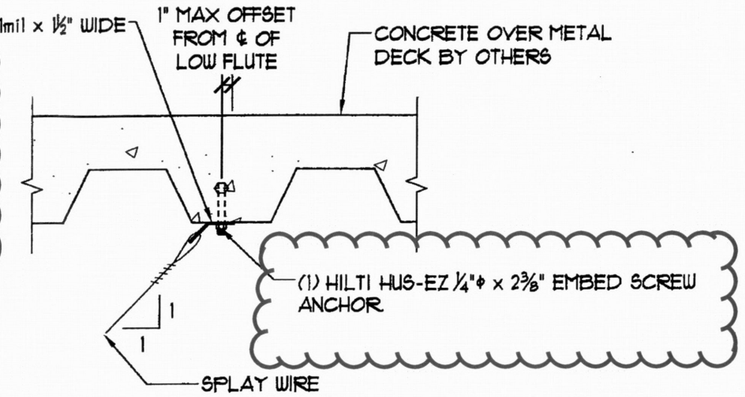

2 SPLAY WIRE CONNECTION @ CONCRETE OVER METAL DECK
SCALE: 1½" = 1'-0"

Per approved fastener and methods described on approved structural calcs (ABHT 11/09/2012)

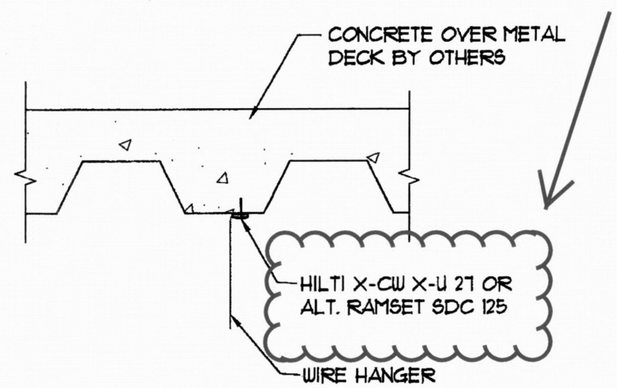

1 WIRE HANGER CONNECTION @ CONCRETE OVER METAL DECK
SCALE: 1½" = 1'-0"

REVIEWED
☐ NO EXCEPTIONS NOTED
☒ IMPLEMENT AS NOTED
☐ REVISE AND RESUBMIT
☐ REJECTED
This conditional review is limited in scope and not detailed and is only for conformance with the visual design concept set forth in the Contract Documents. The Contractor is responsible for confirming quantities and quality, verifying dimensions, selecting fabrication procedures and construction techniques, coordinating, and safely performing the work. The Architect has not reviewed and is not responsible for substitutions to or deviations from the Contract Documents not clearly noted by the Contractor and specifically accepted by the Architect in writing.
By: Margaux Davis
Date: 11/09/12
MICHAEL WILLIS ARCHITECTS

City of Portland
REVIEWED FOR CODE COMPLIANCE
JUL 01 2013
Permit Number

REGISTERED PROFESSIONAL ENGINEER 8851 OREGON JULY 30, 1976 ALLAN J. SCHOENER
EXPIRES 6/30/14

DRAWING STATUS:	DATE:
☐ PRELIMINARY	
☒ SUBMITTED	07/26/12
☐ BID SET	
☐ PERMIT SET	
☐ CONST. SET	

No.	REVISION:	DATE:

DEVCO engineering inc.
245 NE CONIFER, P.O. BOX 1211
CORVALLIS, OR 97339
WWW.DEVCOENGINEERING.COM
Corvallis Oregon (541) 757-8991

© COPYRIGHT 2012
DEVCO ENGINEERING, INC.
ALL RIGHTS RESERVED.

PROJECT: PORTLAND EMERGENCY COORDINATION CENTER
PROJECT LOCATION: PORTLAND, OR
CLIENT: WESTERN PARTITIONS

JOB NO. 12-662
DRAWN BY: DEVCO
SHEET TITLE: CONNECTION DETAILS
DRAWING: SK 2

FILE: J:\12\12662 Portland Emergency Center\SK2.dwg 7/26/2012 4:10 PM - Ben

Install w/ approved fasteners and locations per approved structural calcs.

Install per manufacturer's requirements for Seismic Category 'D' (attached as part of submittal)

See Detail 9/A0.04 for additional info.

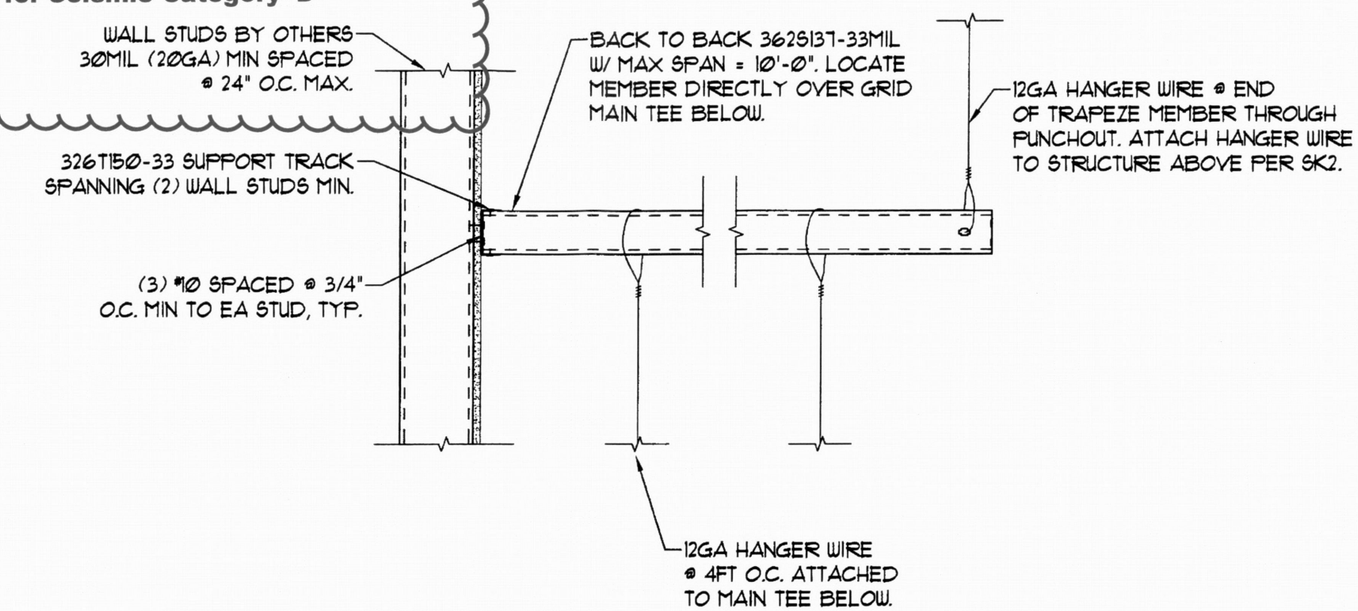

2 MAIN TEE SUPPORT DETAIL

SCALE: 1" = 1'-0"

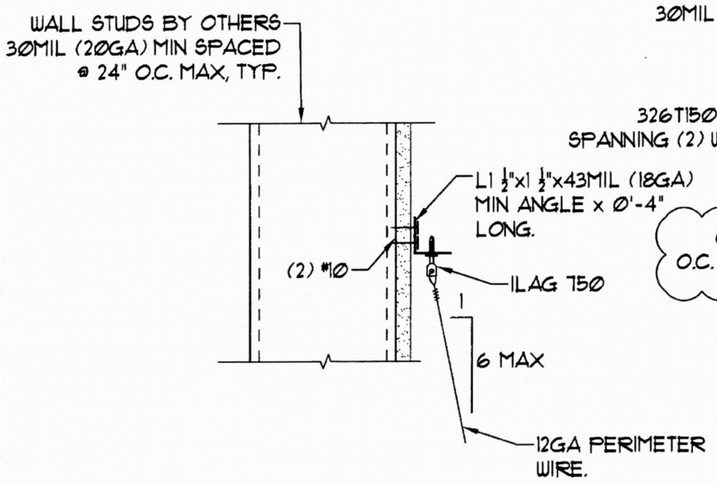

3 PERIMETER WIRE DETAIL

SCALE: 1" = 1'-0"

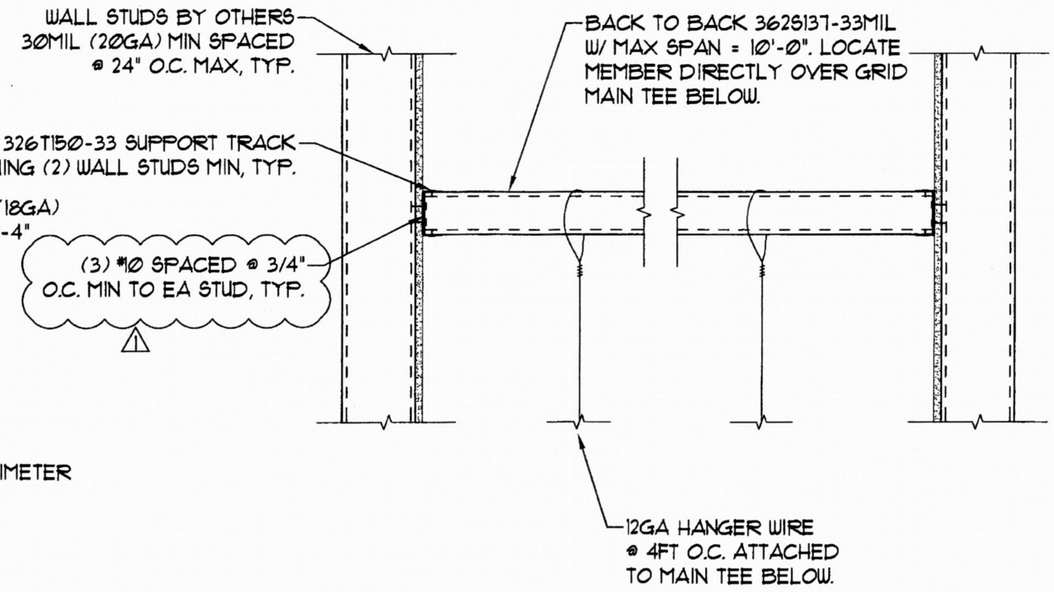

1 MAIN TEE SUPPORT DETAIL

SCALE: 1" = 1'-0"

REVIEWED
- ☐ NO EXCEPTIONS NOTED
- ☒ IMPLEMENT AS NOTED
- ☐ REVISE AND RESUBMIT
- ☐ REJECTED

This conditional review is limited in scope and not detailed and is only for conformance with the visual design concept set forth in the Contract Documents. The Contractor is responsible for confirming quantities and quality, verifying dimensions, selecting fabrication procedures and construction techniques, coordinating, and safely performing the work. The Architect has not reviewed and is not responsible for substitutions to or deviations from the Contract Documents not clearly noted by the Contractor and specifically accepted by the Architect in writing.

By: Margaux Davis

Date: 11/09/12

MICHAEL WILLIS ARCHITECTS

REGISTERED PROFESSIONAL ENGINEER 8861 OREGON JULY 30, 2010 ALLAN J. SCHONEER

EXPIRES 6/30/14

DRAWING STATUS	DATE
☐ PRELIMINARY	
☒ SUBMITTED	07/26/12
☐ BID SET	
☐ PERMIT SET	
☐ CONST. SET	

No.	REVISION	DATE
1		10/29/12
2		
3		
4		
5		
6		

DEVCO engineering inc.
Corvallis Oregon (541) 757-1881
245 NW CONSTITUTION BLVD. SUITE 121
CORVALLIS, OR. 97330
WWW.DEVCOENGINEERING.COM

© COPYRIGHT 2012
DEVCO ENGINEERING, INC.
ALL RIGHTS RESERVED.

PROJECT: PORTLAND EMERGENCY COORDINATION CENTER

PROJECT LOCATION: PORTLAND, OR.

CLIENT: WESTERN PARTITIONS, INC.

City of Portland REVIEWED FOR CODE COMPLIANCE JUL 01 2013 Permit Number

JOB NO. 12-662

DRAWN BY: DEVCO

SHEET TITLE: CONNECTION DETAILS

DRAWING: SK 3

FILE: J:\12\12662 Portland Emergency Center\SK3.dwg 10/29/2012 11:34 AM - Ben