City of Portland, Oregon - Bureau of Development Services

1900 SW Fourth Avenue • Portland, Oregon 97201 • 503-823-7300 • www.portlandoregon.gov/bds

Permit Revision Application and Submittal Requirements

A Permit Revision is required when there are proposed changes to the project after the permit has been issued. This may arise due to discrepancies between the city-approved permit drawings and actual field conditions, or the customer has changed their mind about an aspect of the project. In all cases, a revision to the existing permit must be submitted, reviewed and approved.

Applicants will provide:

- ☒ A copy of this application
- ☒ Three (3) sets of plans that clearly reflect the proposed change(s).

  Drawings and calculations must be stamped and signed by the Architect and/or the Engineer of Record, if applicable.
- ☒ One (1) copy of the original city approved permit drawings. (NOTE: If your project has an assigned process manager please contact them regarding submittal of the revision).
- ☒ Two (2) sets of calculations, if applicable
- ☐ Inspector's correction notice, if revision is due to an inspection correction
- ☒ Revision fee (paid at time of submittal)

Contact Information:

Contact name Jeff Guggenheim

Address 925 NW 19th, Suite F

City Portland **State** OR **Zip Code** 97209

Phone 503-272-1566 **Email** jeff@figstudiopdx.com

Value of proposed revision _____ **Issued permit #** 13-186850 CO

Description of revision Changed full height wall into partial height wall. Wall bracing is to be provided by a box beam. Engineering for box beam is provided.

Fees:

The Permit Revisions are subject to fees associated with plan review, processing and any increase in project value. Additional fees may apply if adding plumbing fixtures.

The Bureau of Development Services fee schedule is available under the fees tab on the BDS web site at: *www.portlandoregon.gov/bds*. Fees are updated annually on July 1st.

Helpful Information:

Bureau of Development Services
City of Portland, Oregon
1900 SW 4th Avenue, Portland, OR 97201
www.portlandoregon.gov/bds

Submit your plans in person to:
Development Services Center (DSC), First Floor,
Tuesday - Friday:
7:30 am - 12:00 pm

Closed Mondays

Important Telephone Numbers:

BDS main number	503-823-7300
DSC automated information line	503-823-7310
Building code information	503-823-1456
BDS 24 hour inspection request line	503-823-7000
Residential information for one and two family dwelling	503-823-7388
General Permit Processing and Fee Estimate info	503-823-7357
City of Portland TTY	503-823-6868

Project: Montbell Tennant Improvement
Portland, Oregon

Client: **FIG STUDIO**

Date: 8-1-13
Page: 1
By: RJG.
Job #: 213153

13-156550 REV 01 CO

STRUCTURAL CALCULATIONS
FOR
MONTBELL TENNANT IMPROVEMENTS

DISPLAY WALL

DESIGN LOADING:

SEISMIC SITE CLASS D
SDS = .73

MINIMUM INTERIOR LATERAL
LOADS = 5 PSF

REGISTERED PROFESSIONAL ENGINEER
14725
OREGON
JAN. 23, 1990
ROBERT GRUMMEL

EXPIRES 6/30/15

WALL wt 2 Layers GYP + metal STUDS SAY 10 PSF

SEISMIC $A_p = 1.0$ $R_p = 2.5$

$$F_p = .4 \frac{A_p S_{DS} W_p}{R_p / I_p} \left(1 + 2 \cancel{\frac{z}{h}}\right)$$

0 @ BASE

$$= \frac{.4(1.0)(.723)}{2.5} = .115 W_p$$

$$= 1.15$$

$\boxed{\text{5 PSF MIN controls Design}}$

SPAN = 13' - 1/2"

W top = 9.66/2 (5 PSF) = 24.1 #/FT

$M = 24.1 (13)^2 / 8 = 510$ #-FT

S_{req} 33 KSI $= \frac{.510 \times 12}{33(.66)} = \underline{\underline{.28 \text{ IN}^3}}$

Project: Montbell Tennant Improvement
Portland, Oregon

Client: **FIG STUDIO**

Date: 8-1-13
Page: 3
By: RJB
Job #: 213153

$S_{req} = .28$

TRY 3½" STUD

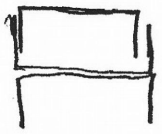

2x6A
S = .22
16 6A S = .365
I = .6398

$\Delta = .510(13)^2/160(.6398) = .84$
$= \ell/185$

TRY 3 CHANNELS I = ~~.6398~~
20GA I = .3923 x 3
= 1.17
$\Delta = .45 = \ell/339$ ok

USE 3½ x 20GA STUDS
W/ 3 3½x 20GA TRACKS
@ TOP

CONN to concrete @ STUD
WALL

R = 24.1 x 13/2 = 160 #
2 #8 SCREWS or
1/4" ϕ SDS SCREWS SEE DETAIL

DISPLAY FLOOR

SPAN = 3'-0"

W = 100PSF (1.33) = 133 #/FT

M = 133(3)²/8 = 149 #-FT

$S_{req} = \frac{.149(12)}{.66(33)} = .0821$

S 35/8x 20G 'C' STUD W 1 3/8"
FLANGE = .305 OK
Δ = OK B.F.

R = 133 x 3/2 = 200 #/FT.

USE (2) #

#8 75 Pullout
SHEAR = 175 #
USE (2) PER STUD @ 16" OC
CAP = 175 x 2 = 350

Project: Montbell Tennant Improvement
Portland, Oregon

Client: **FIG STUDIO**

Date: 8-1-13
Page: 5
By: RSG
Job #: 213153

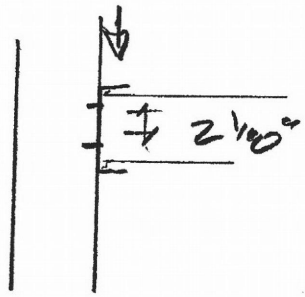

E = 3/4" R = 200 (1.33) = 266

PT = 266 (.75) / 2.125 = 93 #

For LAP STUDS w/ 3 SCREWS Per STUD

SET STUDS on STUDS NEXT TO MASONRY WALL

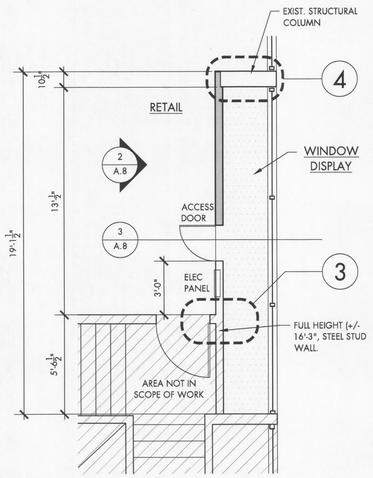

1 WINDOW DISPLAY FLOOR PLAN
SCALE: 1/4"=1'-0"

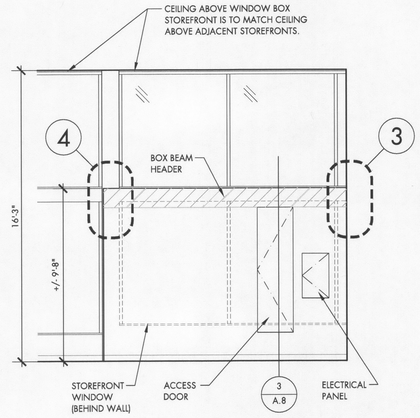

2 WINDOW DISPLAY ELEVATION
SCALE: 1/4"=1'-0"

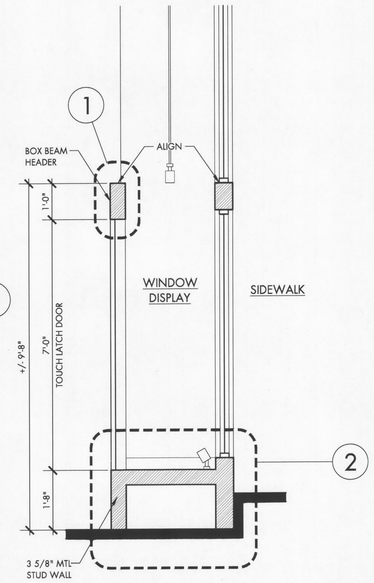

3 WINDOW DISPLAY SECTION
SCALE: 1/2"=1'-0"

Project: Montbell Tennant Improvement
Portland, Oregon
Client: FIG STUDIO
Date: 8-1-13
Page: 1
By: RJG.
Job #: 213153

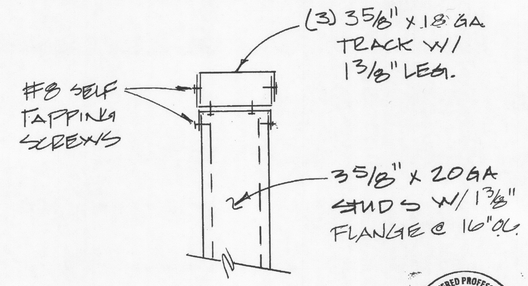

REGISTERED PROFESSIONAL ENGINEER 14725 OREGON JAN. 23, 1998 ROBERT GRUMMEL
EXPIRES 6/30/13

1 MTL STUD BOX BM @ TOP OF WALL
3" = 1'-0"

Grummel Engineering LLC – 7421 SE Powell Blvd., Portland, OR 97206 - Phone: (503) 244-7014

Project: Montbell Tennant Improvement
Portland, Oregon
Client: FIG STUDIO
REVISED 8-5-13
Date: 8-1-13
Page: 2
By: RJG.
Job #: 213153

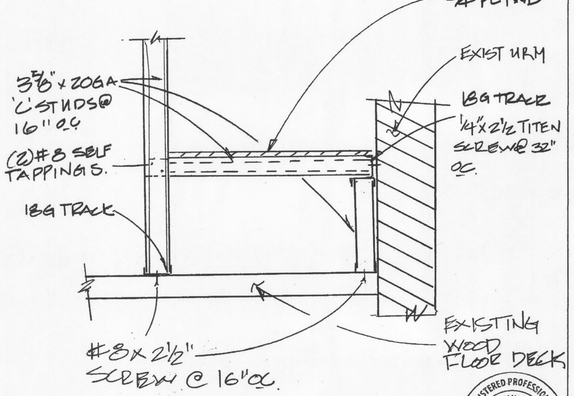

REGISTERED PROFESSIONAL ENGINEER 14725 OREGON JAN. 23, 1998 ROBERT GRUMMEL
EXPIRES 6/30/15

2 DISPLAY PLATFORM SECTION

Grummel Engineering LLC – 7421 SE Powell Blvd., Portland, OR 97206 - Phone: (503) 244-7014

Project: Montbell Tennant Improvement
Portland, Oregon
Client: FIG STUDIO
REVISED 8-5-13
Date: 8-1-13
Page: 3
By: RJG
Job #: 213153

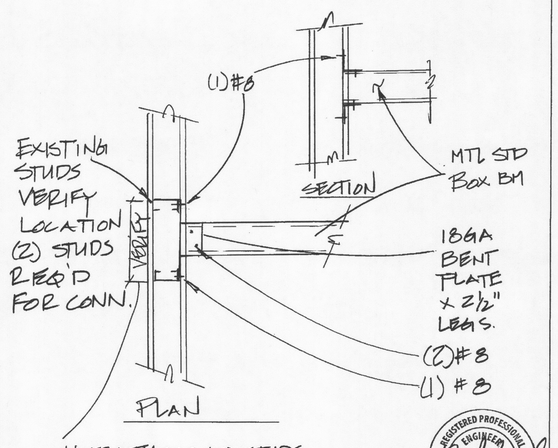

NOTE: THESE (2) STUDS MAY BE TOGETHER. CONNECTION JUST NEEDS (2) STUDS, ADJUST PLATE SIZE AS REQ'D

REGISTERED PROFESSIONAL ENGINEER 14725 OREGON JAN. 23, 1998 ROBERT GRUMMEL
EXPIRES 6/30/15

3 BOX BM TO EXIST MTL STUD WALL 1" = 1'-0"

Grummel Engineering LLC – 7421 SE Powell Blvd., Portland, OR 97206 - Phone: (503) 244-7014

Project: Montbell Tennant Improvement
Portland, Oregon
Client: FIG STUDIO
REVISED 8-5-13
Date: 8-1-13
Page: 4
By: RJG.
Job #: 213153

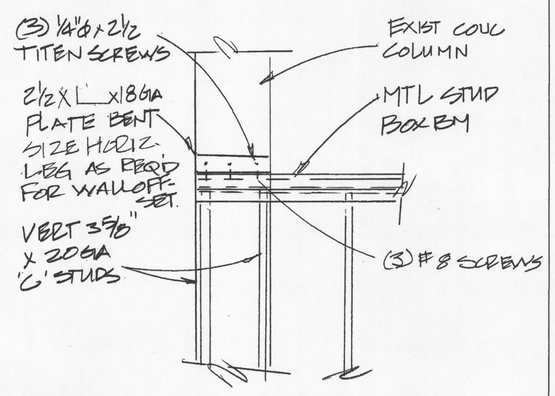

City of Portland REVISED FOR CODE COMPLIANCE AUG 08 2013 Permit Number

REGISTERED PROFESSIONAL ENGINEER 14725 OREGON JAN. 23, 1998 ROBERT GRUMMEL
EXPIRES 6/30/15

4 BOX BM TO (E) CONC COL 1" = 1'-0"

Grummel Engineering LLC – 7421 SE Powell Blvd., Portland, OR 97206 - Phone: (503) 244-7014

FIG.

FIG. STUDIO
ARCHITECTURE + INTERIORS LLC
925 NW 19th Avenue, Studio F
Portland, Oregon 97209

e hello@figstudiopdx.com
t 503 . 272 . 1566
w figstudiopdx.com

MONTBELL
902 SW YAMHILL STREET
PORTLAND, OR 97205

13-156550 REV 01 CO

1 WINDOW DISPLAY REVISIONS 8-6-13

PERMIT SET

WINDOW DISPLAY DETAILS

REGISTERED ARCHITECT JEFFREY A. GUGGENHEIM PORTLAND, OR 6037 STATE OF OREGON

A.8

PROJECT: 1309
DATE: 7.30.13