PRO-BEL

www pro-bel ca

PRO-BEL EQUIPMENT
TEST REPORTS/CALCULATIONS

PRO-BEL JOB#
2N1-2009-13919

8/24/2009

REGISTERED PROFESSIONAL ENGINEER 17646 OREGON MARCH 14 1995 MING D CHERNG

Exp. 12/31/2007

MATISSE, THE BLOCK 46
Portland, OR

(REV-0)

August 24, 2009

07-16742-DFS07-CO

Head Office
765 Westney Rd S
Ajax ON CA L1S 6W1
[t] 905 427 0616
[tf] 800 461 0575
[f] 905 427 2545
[e] info@pro bel ca

Western Office
#103 350 East Kent Ave S
Vancouver, BC V5X 4N6
[t] 604 687 1301
[f] 604 687 1306
[e] infovan@pro bel ca

Test Report

Test Date	Mar-03-04
Records For	
Category	Roof Anchor
Series	PBE75
Part Number	**PBE75-0000-18000**
Type	Weld to Structure (with U-Bar)
Report #	040303-BM03
Job #	N/A

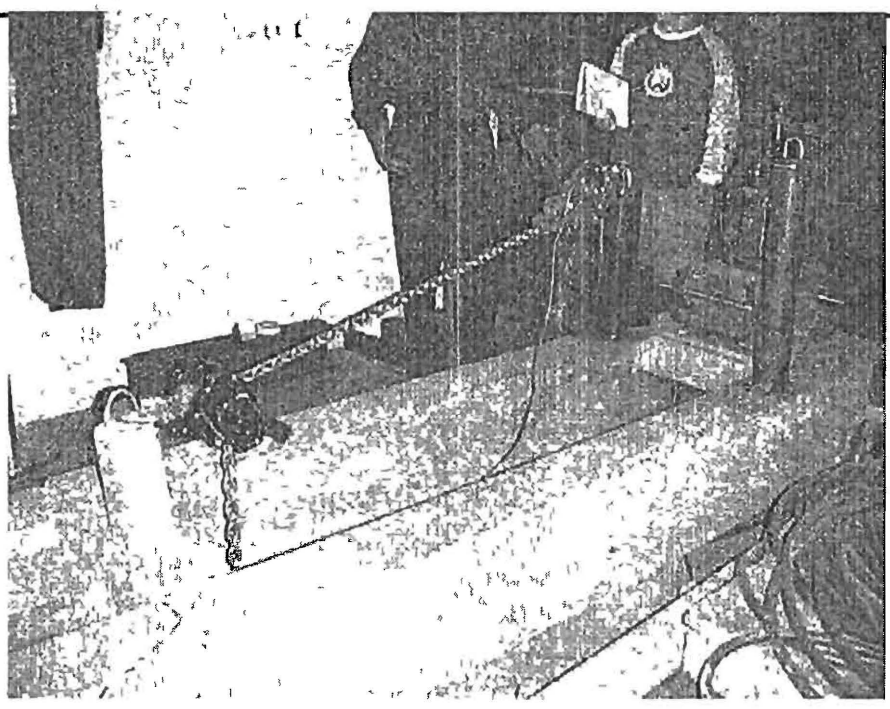

1 1 INTRODUCTION

The following is a report on the static test of the Pro Bel Weld to Structure Roof Anchor (with U Bar) The material specifications and details of the tested equipment are described in the attached drawing (PBE75-0000-18000)

The above image shows the rig used to conduct this test The equipment consisted of a standard 18' high Anchor with U-Bar welded to the test rig The force was applied using a heavy duty Chain Puller and measured using a Sensotech Model NK electronic transducer with a digital readout

1 2 TEST RESULTS

Anchor Tested with Applied Load Perpendicular to the Plane of the Anchoring U-Bar

Load Applied (lbs)	Deflection (in)	Observation
None	0	Starting Position
1638	0 135	
Released		No Evidence of Deformation
2261	0 196	
Released		No Evidence of Deformation
3195	0 281	
Released		No Evidence of Deformation
4245	0 410	
Released		No Evidence of Deformation
5034	0 561	
Released		No Evidence of Deformation
5573	0 830	
Released		0 409 in Plastic Deformation on the Tube

1 3 TEST PROCEDURE

The test consisted of applying a horizontal load to the Roof Anchor welded to a steel platform as shown above The load was applied to the Anchor instantaneously to at least 5,400 lb

The total static load of 5,573 lb was achieved and sustained for approximately one minute The load was then released and the assembly dismantled Upon inspection of all Anchor components after testing, there was an evidence of Plastic Deformation of 0 409 in on the Tube

1 4 DISCUSSION OF TEST RESULTS

The test demonstrated that the above Roof Anchor could sustain a load of 5,000 lb without exhibiting signs of yielding

1 5 CONCLUSION

The Roof Anchor can sustain a 1,000 lb load and complies with the requirements of CAN/CSA-Z271-98

Furthermore, the Roof Anchor can sustain a load of 5,000 lb without fracture or detachment, and thus complies with CAN/CSA-Z91-M90 for adequacy as part of an overall safety anchoring system

Engineer's Name Bosko Madic Engineer's Signature

Witness 1 Reza Barezpour Signature

PROFESSIONAL ENGINEER PROVINCE OF ONTARIO

3/22/2004
Prepared By Rezab
pbtest 040303 BM03 (PBE75 0000 18000) xls

18" ANCHOR BASE PL'S

(1) 14"X14"X 3/4" BASE PL

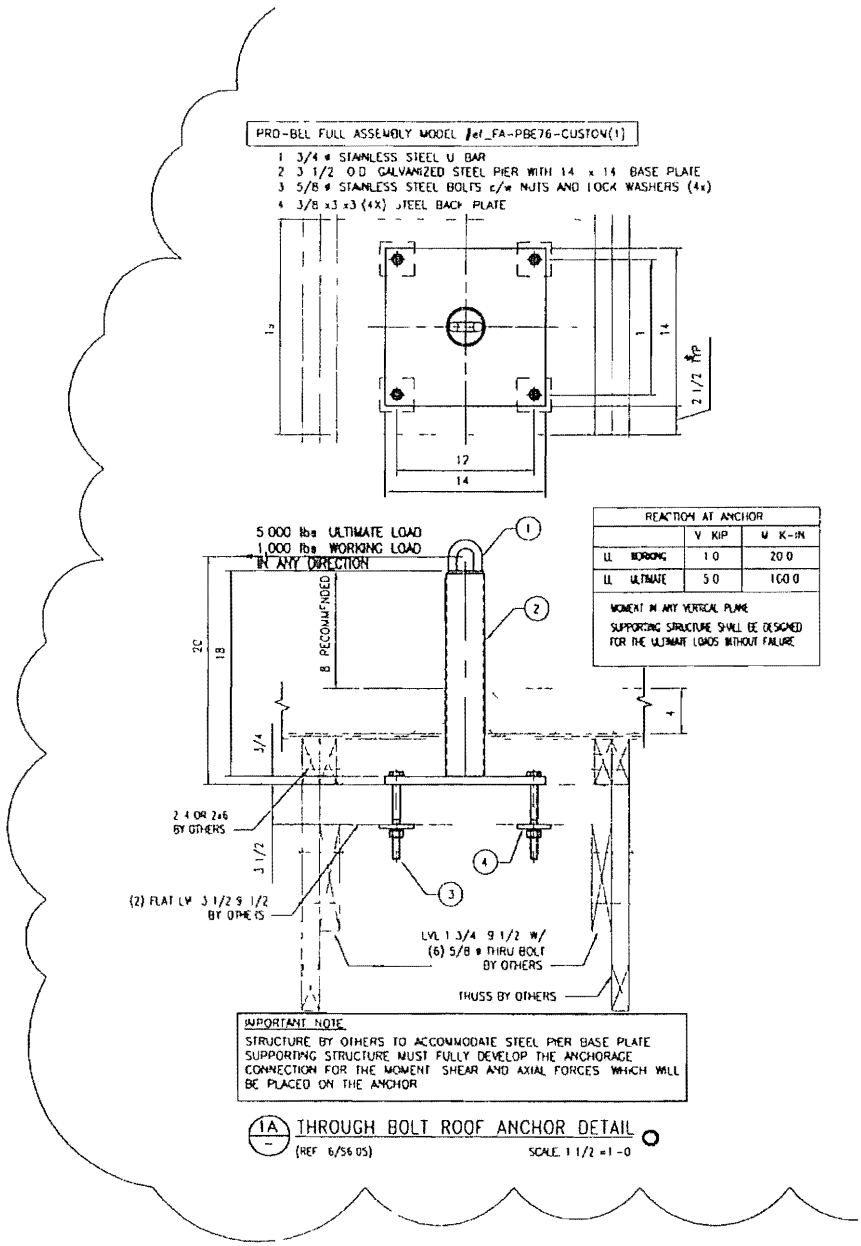

CRITICAL LOAD CONDITION IS AT 45° TO BASE

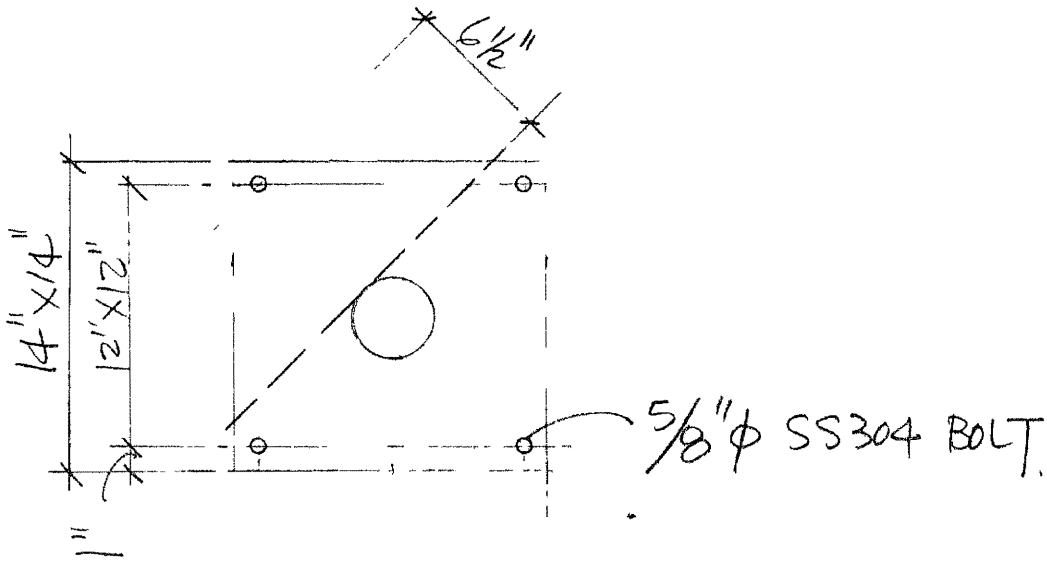

$M_u = 100.0$ K-"

$T_u = C_u \approx \frac{100.0}{16} = 6.3K$

$M_u = 6.3 \times 6.5 = 41.0$ K-"

¾" BASE PL

$S = \frac{16.375 \times 0.75^2}{6} = 1.5 \text{ in}^3$

$f_{bu} = \frac{M_u}{S} = \frac{41.0}{1.5} = 27.3$ KSI

$< 1.5 \times F_y = 1.5 \times 44.0 = 66.0$ KSI ULTIMATE

OK

5/8"φ SS304 BOLT IS OK FOR $T_u = 6.3$ K

WOOD (LVL) BEARING =

$$f_{cu} = \frac{C_u}{A} \approx \frac{6.3}{3 \times 3} = 0.7 \text{ ksi} \quad \text{OK}$$

(2) 11" x 14" x 3/4" BASE PL

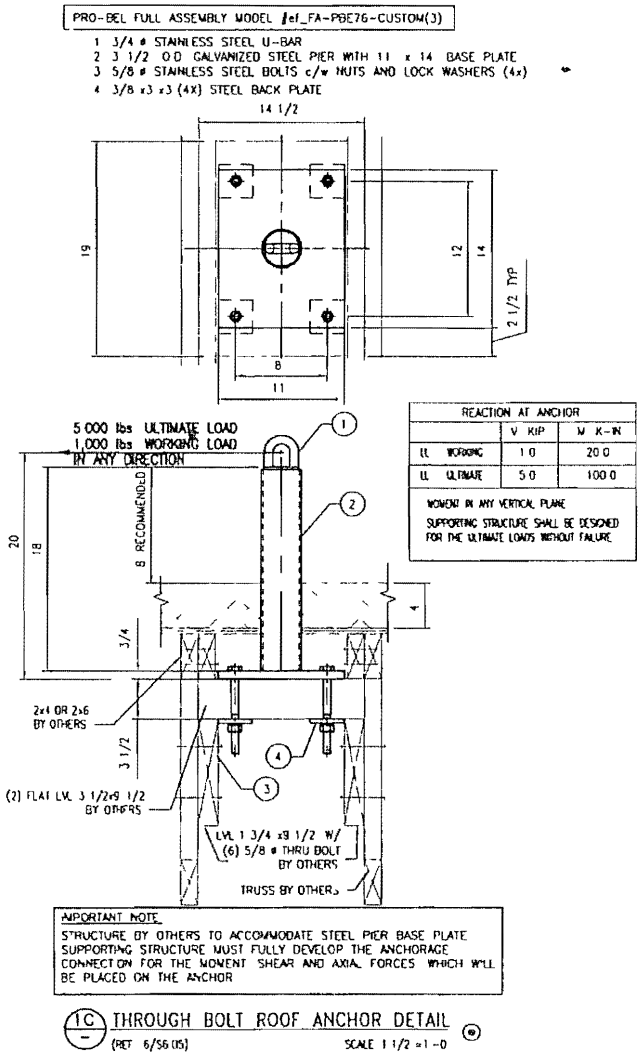

CRITICAL LOAD CONDITION IS AT DIAGONAL TO BASE

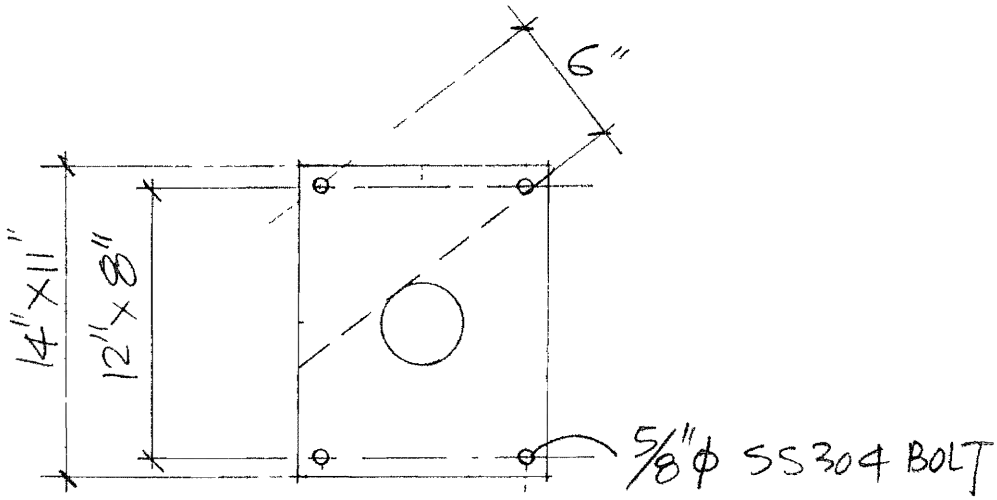

$M_u = 100.0$ K-IN

$T_u = C_u = \frac{100.0}{15} = 6.7$ K

$M_u = 6.7 \times 6 = 40.2$ K-IN

3/4" BASE PL

$S = \frac{14 \times 0.75^2}{6} = 1.3 \text{ in}^3$

$f_{bu} = \frac{M_u}{S} = \frac{40.2}{1.3} = 31.0$ KSI

$< 1.5 F_y = 1.5 \times 44.0 = 66.0$ KSI ULTIMATE

OK

5/8"ϕ SS304 BOLT IS OK FOR $T_u = 6.7$ K

WOOD (LVL) BEARING =

$$f_{cu} = \frac{C_u}{A} = \frac{6.7}{3 \times 3} = 0.74 \text{ ksi} \quad \text{OK}$$

QTY REQ D = 89 BILL OF MATERIAL

ITEM	QTY	DESCRIPTION	MATERIAL	UNIT WT	TOTAL WT
1	1	ROUND BAR 3/4 DIA x 7 1/4 LG	SS304	0.91	0.1
2	1	PLAT ROUND /4 1 8 DIA (with 2 HOLES)	44W	0.55	0.55
3	1	HSS ROUND 3 1/2 DIA x 3/ 6 WALL 17 /4 LG	50W	9.9	9.9
4	1	PLATE 3/4 x 14 x 4	44W	1.6	1.6
5	4	PLATE 3/8 TYP 3 3	44W	1.0	4.0
6		5/8-11 HEX BOLT x 7 LG	SS304	0.5	2.0
7	4	5/8- TUNC HEX NUT	SS304	0.1	0.4
8	4	5/8 LOCK WASHER	SS304	0.1	0.4
				TOTAL	59.8

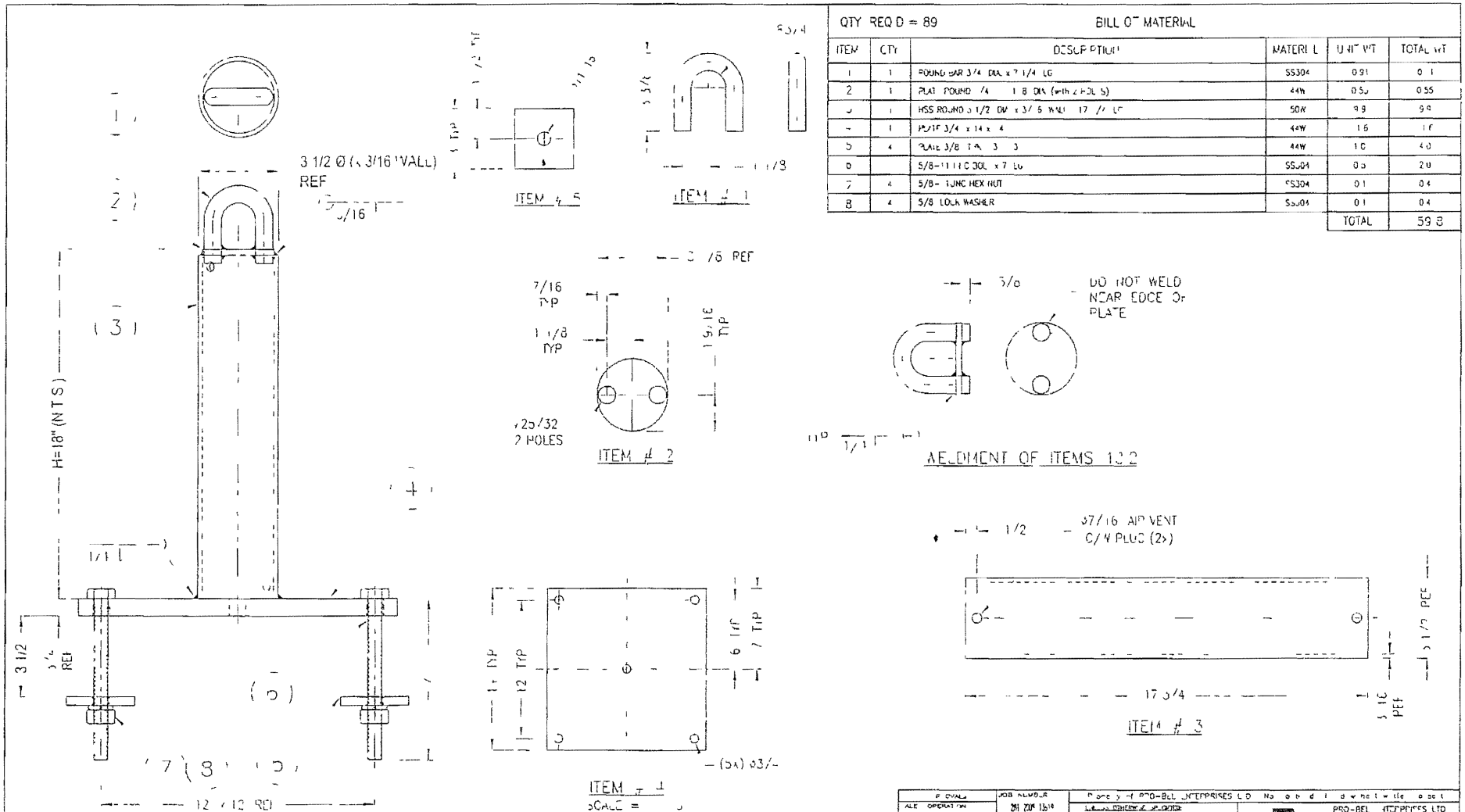

FINISH HOT DIPPED GALVANIZED

–		APD		
NO	DESCRIPTION	BY	CHKD	DATE

PROVALS
ALE OPERATION
ENGINEERING
CHKD BY | APPROVED BY
mc
SHOP

JOB NUMBER 281 2004 13614
DATE AU /13/ 009
REPARED BY AS
FUED B
SCALE 1 1

Property of PRO-BEL ENTERPRISES LTD No part of this drawing may be used

DIMENSIONS ARE IN INCHES
TOLERANCES XXX ±0 ANGLES 1
XX ±0
X ±050
ALL DIMENSIONS ARE NOT MILLIMETRES

PRO-BEL
www.pro-bel.ca

PRO-BEL ENTERPRISES LTD
5 WESTWOOD ROAD SOUTH
ALBION ONTARIO
CANADA L1 7W
tel (905) 27 06 6
fax (905) 27 75 5
toll free (800) 6 0 75

CATEGORY MATISSE THE BLOCK 46 OR
TITLE CUSTOM BOL THROUGH ROOF ANCHORS ASSEMBLY (H = 18)

ASSEMBLY/PART NUMBER	DRAWING NO	REV
RA-CUS-####(1)	RA CUS ####(1)	0

QTY REQ'D = 30

BILL OF MATERIAL

ITEM	QTY	DESCRIPTION	MATERIAL	UNIT WT	TOTAL WT
1	1	ROUND BAR 3/4 DIA x 1/4 LG	SS304	0.91	0.9
2	1	PLATE ROUND 1/4 x 3 1/8 DIA (with 2 HOLES)	44W	0.55	0.55
3	1	HSS ROUND 3 1/2 DIA x 3/16 WALL 1/4 LG	50W	9.9	9.9
4	1	PLATE 3/4 x 11 14	44W	32.7	32.7
5	4	FLAT 3/8 THK x 3 x 3	44W	1.0	4.0
6	4	5/8-11 UNC BOLT x 7 G	SS304	0.5	0
7	4	5/8-11UNC HEX NUT	SS304	0.1	0
8		5/8 LOCK WASHER	SS304	0.1	0.4
				TOTAL	50.5

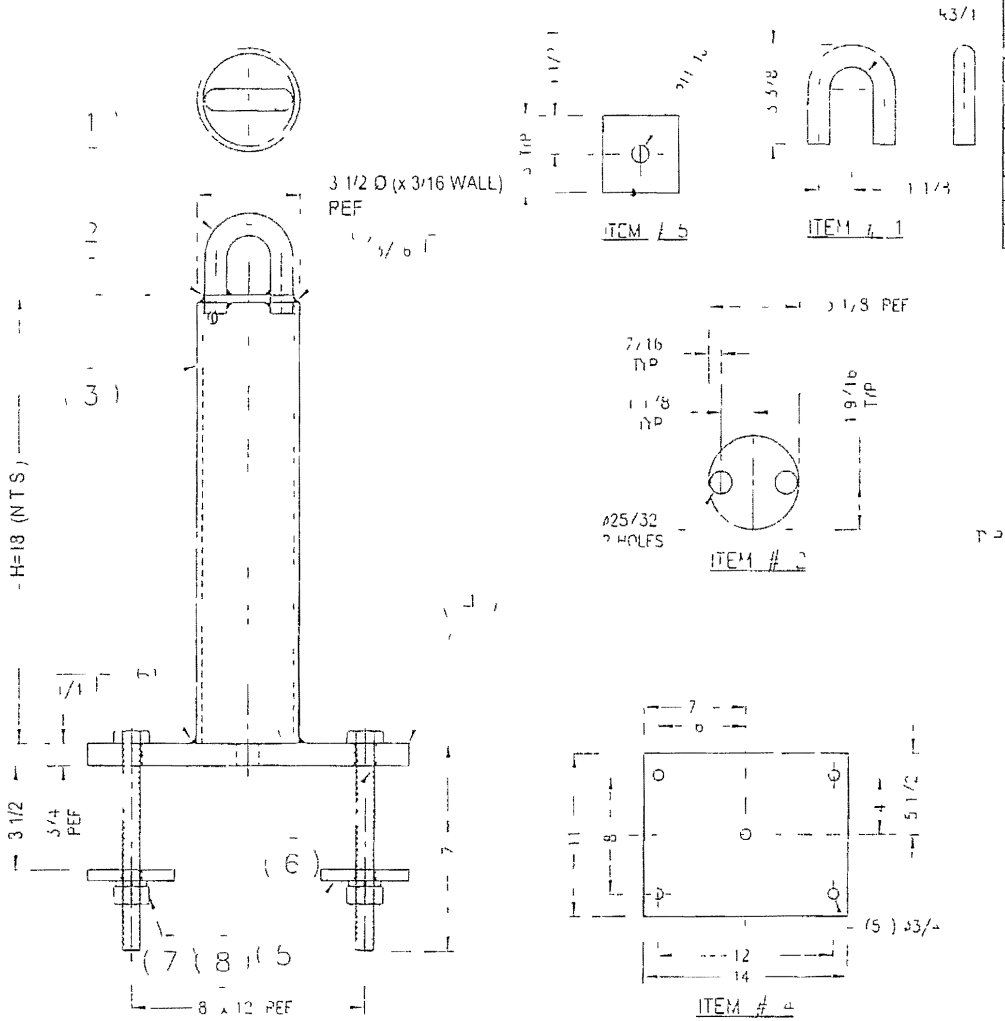

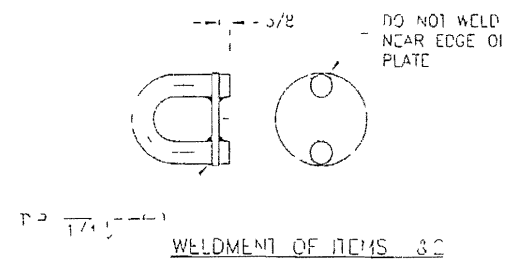

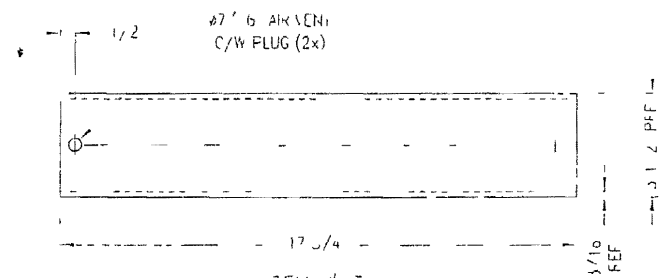

NO	DESCRIPTION	BY	CHKD	DATE
-				

REVISION

JOB NUMBER JN 2009 1919

DATE 4/C/13/2009

PRIC AREA B AS

SCALE 1 : 1

PRO-BEL ENTERPRISES LTD

PRO-BEL

www.pro-bel.ca

CATEGORY MATISSE THE CLOCK 46 OR

TITLE CUS DW BOLT THROUGH ROOF ANCHORS ASSEMBLY (H = 18")

ASSEMBLY/PART NUMBER	DRAWING NO	REV
RA-CUS-####(3)	f_RA CUS-####(3)	0

Test Report

Test Date	Mar 03-04
Records For	
Category	Roof Anchor
Series	PBE75
Part Number	**PBE75-0200-24000**
Type	Weld to Structure (with U Bar)
Report #	040303-BM04
Job #	N/A

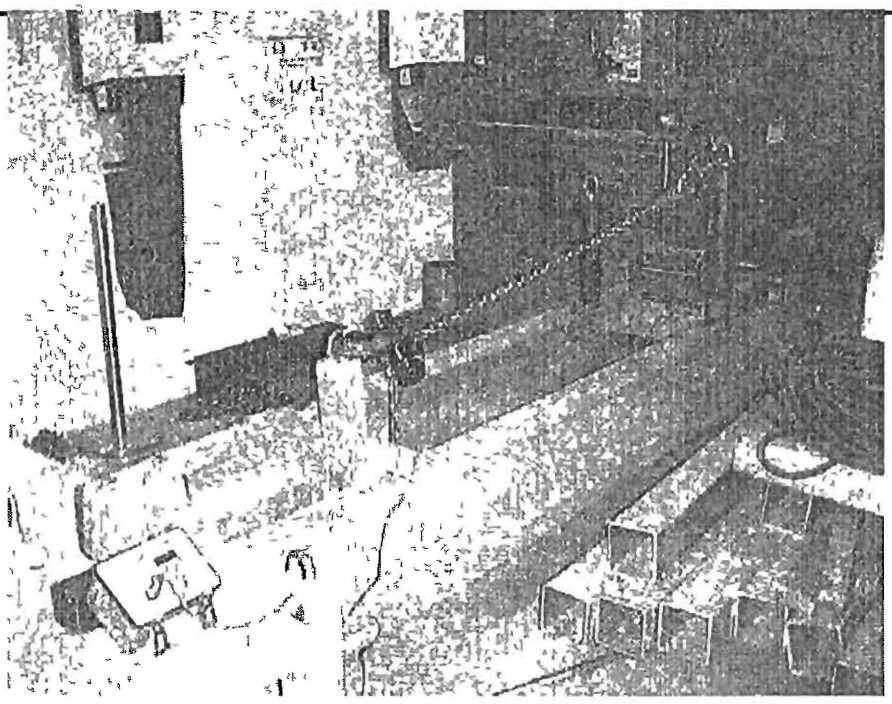

1 1 INTRODUCTION

The following is a report on the static test of the Pro-Bel Weld to Structure Roof Anchor (with U-Bar) The material specifications and details of the tested equipment are described in the attached drawing (PBE75-0200-24000)

The above image shows the rig used to conduct this test The equipment consisted of a standard 24 high Anchor with U-Bar welded to the test rig The force was applied using a heavy duty Chain Puller and measured using a Sensotech Model NK electronic transducer with a digital readout

1 2 TEST RESULTS

Anchor Tested with Applied Load Perpendicular to the Plane of the Anchoring U-Bar

Load Applied (lbs)	Deflection (in)	Observation
None	0	Starting Position
1483	0 150	
Released		No Evidence of Deformation
2225	0 200	
Released		No Evidence of Deformation
3097	0 302	
Released		No Evidence of Deformation
4154	0 511	
Released		No Evidence of Deformation
5193	0 822	
Released		0 284 in Plastic Deformation on the Tube
5508	1 035	
Released		0 336 in Plastic Deformation on the Tube

1 3 TEST PROCEDURE

The test consisted of applying a horizontal load to the Roof Anchor welded to a steel platform as shown above The load was applied to the Anchor instantaneously to at least 5,400 lb

The total static load of 5,508 lb was achieved and sustained for approximately one minute The load was then released and the assembly dismantled Upon inspection of all Anchor components after testing, there was an evidence of Plastic Deformation of 0 336 in on the Tube

1 4 DISCUSSION OF TEST RESULTS

The test demonstrated that the above Roof Anchor could sustain a load of 5,000 lb without exhibiting signs of yielding

1 5 CONCLUSION

The Roof Anchor can sustain a 1,000 lb load and complies with the requirements of CAN/CSA-Z271-98

Furthermore, the Roof Anchor can sustain a load of 5,000 lb without fracture or detachment, and thus complies with CAN/CSA-Z91-M90 for adequacy as part of an overall safety anchoring system

Engineer's Name Bosko Madic Engineer's Signature

Witness 1 Reza Barezpour Signature

LICENSED PROFESSIONAL ENGINEER
B MADIC
PROVINCE OF ONTARIO

3/22/2004
Prepared By Rezab
pbtest_040303 BM04 (PBE75 0200 24000) xls

24" ANCHOR BASE PL'S

(1) 14" x 14" x 3/4" BASE PL

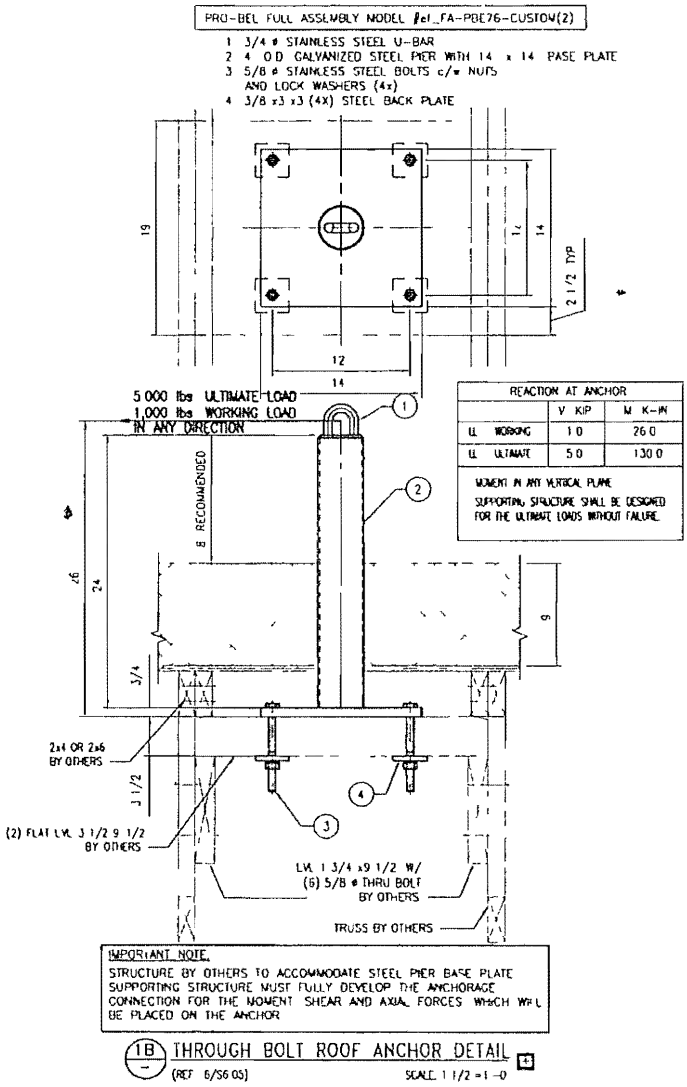

$M_u = 130.0$ K-11

BY PROPORTION (SEE PAGE 4).

$f_{ub} = \frac{130.0}{100.0} \times 27.3 = 35.5$ KSI

$< 1.5F_y = 66.0$ KSI ULTIMATE OK.

5/8" ϕ SS304 BOLT IS OK FOR $T_u = \frac{130.0}{100.0} \times 6.3$

$= 8.2$ K

WOOD (LVL) BEARING:

$f_{cu} = \frac{130.0}{100.0} \times 0.7 = 0.9$ KSI OK

(2) 11" X 14" X 3/4" BASE PL

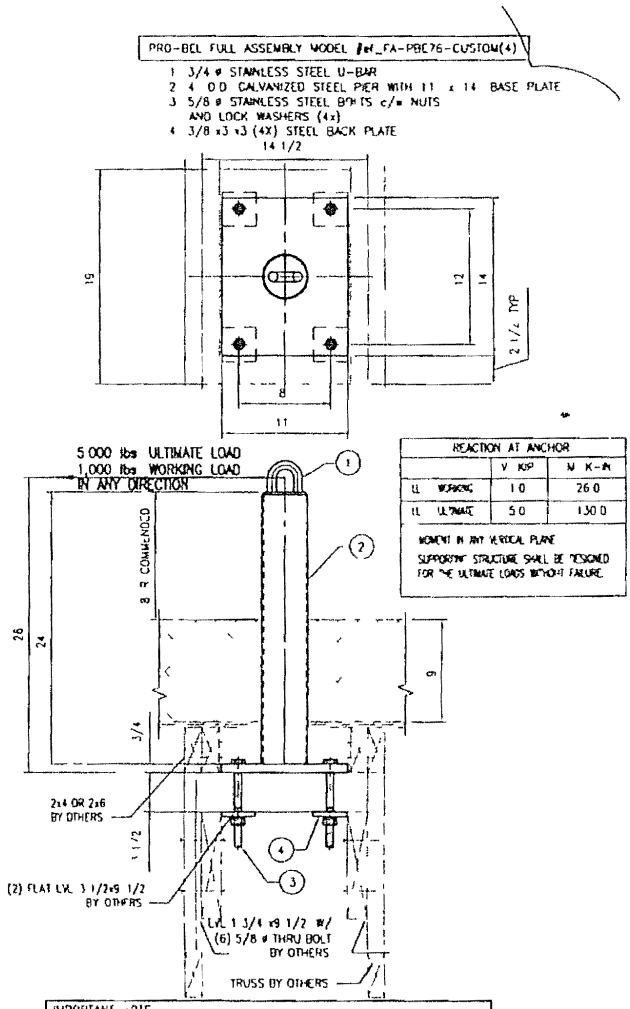

10 THROUGH BOLT ROOF ANCHOR DETAIL

(REF 6/S6.05) SCALE 1 1/2 1-0

$M_u = 130.0$ K-IN

BY PROPORTION (SEE PAGE 6)

$$f_{ub} = \frac{130.0}{100.0} \times 31.0 = 40.3 \text{ ksi}$$

$< 1.5 F_y = 66.0$ ksi ULTIMATE OK

5/8" ϕ SS304 BOLT IS OK FOR $T_u = \frac{130.0}{100.0} \times 6.7$
$= 8.7$ K

WOOD (LVL) BEARING

$$f_{cu} = \frac{C_u}{A} = \frac{8.7}{3 \times 3} = 0.97 \text{ ksi OK}$$

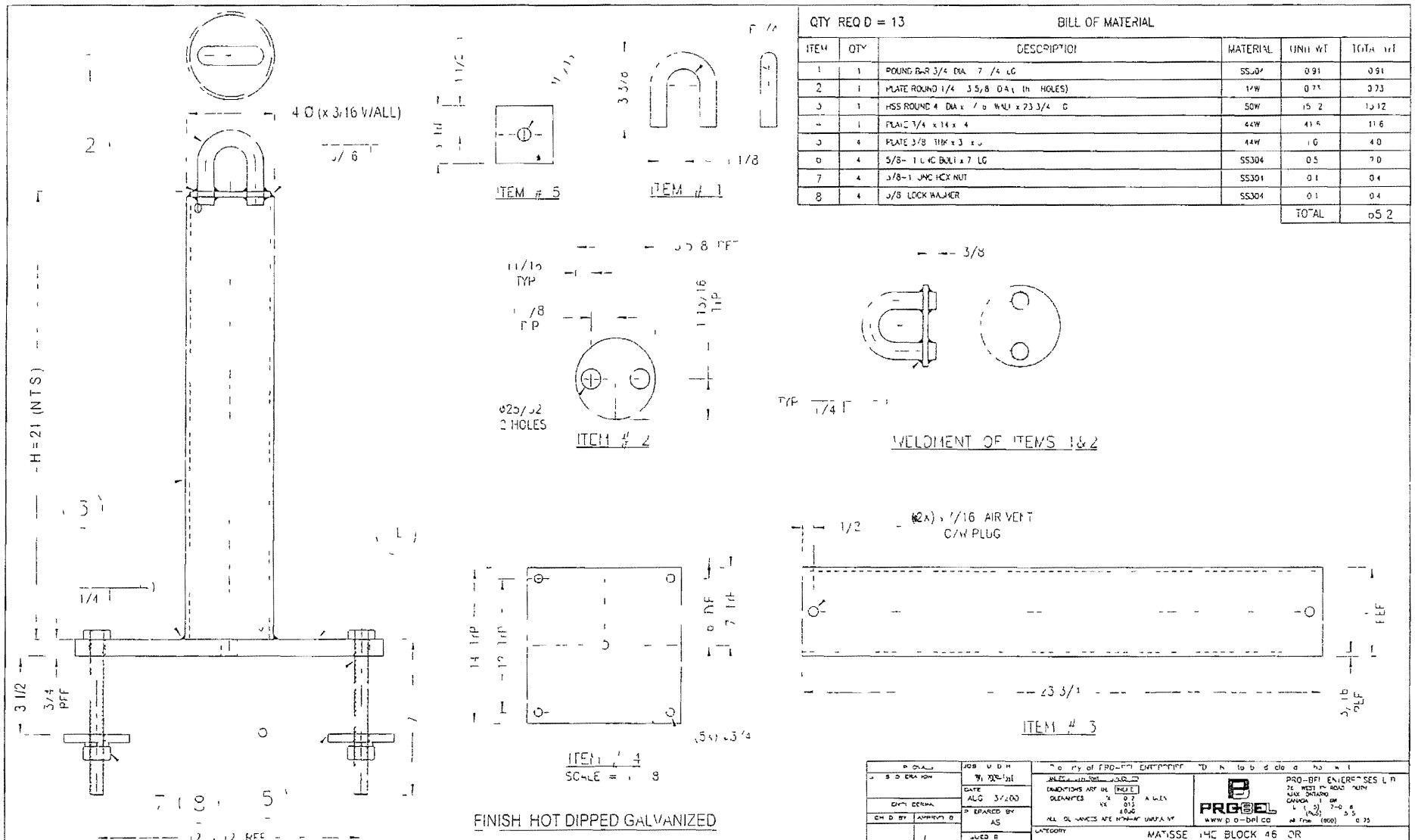

QTY REQ'D = 13

BILL OF MATERIAL

ITEM	QTY	DESCRIPTION	MATERIAL	UNIT WT	TOTAL WT
1	1	ROUND BAR 3/4 DIA 7 1/4 LG	SS304	0.91	0.91
2	1	PLATE ROUND 1/4 3.5/8 DIA (4 HOLES)	1/4W	0.73	0.73
3	1	HSS ROUND 4 DIA x 7/8 WALL x 23 3/4 LG	50W	15.2	15.12
4	1	PLATE 3/4 x 14 x 14	44W	41.5	41.6
5	4	PLATE 3/8 THK x 3 x 3	44W	1.0	4.0
6	4	5/8-11 UNC BOLT x 7 LG	SS304	0.5	2.0
7	4	5/8-11 UNC HEX NUT	SS304	0.1	0.4
8	4	5/8 LOCK WASHER	SS304	0.1	0.4
				TOTAL	65.2

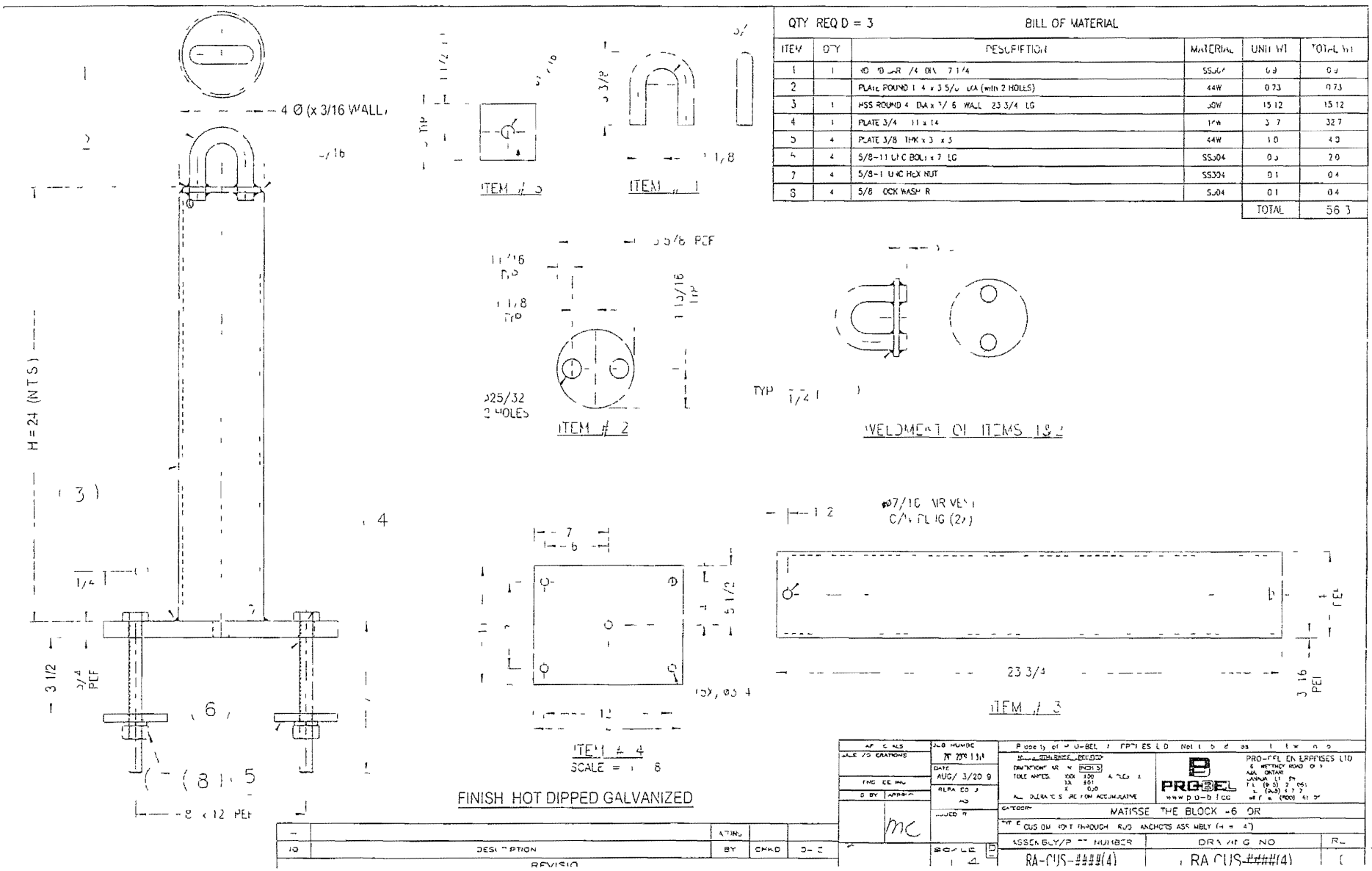

QTY REQ D = 3

BILL OF MATERIAL

ITEM	QTY	DESCRIPTION	MATERIAL	UNIT WT	TOTAL WT
1	1	[illegible]	SS304	0.9	0.9
2		PLATE ROUND 1 4 x 3 5/8 LGA (with 2 HOLES)	44W	0.73	0.73
3	1	HSS ROUND 4 DIA x 3/16 WALL 23 3/4 LG	304	15.12	15.12
4	1	PLATE 3/4 11 x 14	1CW	3.7	32.7
5	4	PLATE 3/8 THK x 3 x 3	44W	1.0	4.0
6	4	5/8-11 UNC BOLT x 7 LG	SS304	0.5	2.0
7	4	5/8-11 UNC HEX NUT	SS304	0.1	0.4
8	4	5/8 LOCK WASHER	SS304	0.1	0.4
				TOTAL	56.3

REVISION				
—				
NO	DESCRIPTION	BY	CHKD	DATE

JOB NUMBER
DATE AUG/ 3/20 9
ALPA CO J
NO
ISSUED R
SCALE

Property of PRO-BEL / PRO-FEL ENTERPRISES LTD. Not to be [illegible]

PRO-FEL ENTERPRISES LTD
6 HETTINGY ROAD
AJAX ONTARIO
L1S 6N
T L (905) 2 (965)
L (905) 6 7 7
WEB (800) 41 [illegible]

PRO-BEL
www.pro-bel.com

CATEGORY MATISSE THE BLOCK -6 OR

THE CUSTOM HOT THROUGH ROD ANCHORS ASSEMBLY (4 = 4")

ASSEMBLY/PART NUMBER	DRAWING NO	REV
RA-CUS-####(4)	RA-CUS-####(4)	