TESNER STRUCTURAL ENGINEERS

1534 Southeast 25th Avenue Portland, OR 97214 Phone 503-239-9119 Fax 503-239-9122

ORIGINAL

SUPPLEMENTAL STRUCTURAL CALCULATIONS

FOR

RESIDENTIAL REMODEL
1406 N. WINCHELL STREET
PORTLAND, OREGON

STRUCTURAL REGISTERED PROFESSIONAL ENGINEER 16310 OREGON DEC. 1, 1992 JOHN ANTHONY TESNER JR.

EXPIRES: 6/30/2014

7/9/13

Project: 1406 N. Winchell Street
Residential Remodel

Client: Larry Mills

Proj. No.:

By: JAT

Date: June 2013

Sheet No.: COVER

TESNER STRUCTURAL ENGINEERS

1534 Southeast 25th Avenue Portland, OR 97214 Phone 503-239-9119 Fax 503-239-9122

LATERAL EVALUATION

WIND GOVERNS OVER SEISMIC

$V = 95$ MPH (3-SECOND GUST)

EXPOSURE B

$K_{zt} = 1.0$

$I = 1.0$

MEAN ROOF HEIGHT $h \approx 18' < 30'$

USE ASCE 7, METHOD 1 (SIMPLIFIED PROCEDURE)

ROOF PITCH IS APPROX. 10:12 $\theta = 39.8°$

$p_s = \lambda K_{zt} I p_{s30}$

$\lambda = 1.0$

$p_s = (1.0)(1.0)(1.0) p_{s30}$

$= p_{s30}$

ZONE	$p_s = p_{s30}$
A	16.1
B	11.0
C	12.9
D	8.9

$a = (0.1)(28) = 2.8'$

USE $a = 3'$

APPLY ZONES A & B OVER $2a = 6'$ WIDTH

CONT'D

FOR SIMPLICITY, CONSIDER AREAS A_4, A_5, A_6 AND 6' PORTION AT RIGHT END OF A_1 & A_2 AS WITHIN END ZONE (SEE SHT. 4)

TOTAL SHEAR LOAD TO WEST WALL LINE:

$$V = (12.9)(129.5)\left(\frac{14}{28}\right) + (16.1-12.9)(4.625)(6)\left(\frac{25}{28}\right) + (12.9)(16.1)\left(\frac{14}{28}\right) + (16.1-12.9)\left(\frac{1}{2}\right)(6)(5)\left(\frac{24}{28}\right) + (8.9)(23.7)\left(\frac{20.83}{28}\right) + (11.0)(42.2)\left(\frac{26.67}{28}\right) + (16.1)(8.6)\left(\frac{26.4}{28}\right) + (16.1)(16.3)\left(\frac{28.83}{28}\right)$$

$$= 835 + 79 + 1038 + 41 + 157 + 442 + 131 + 270$$

$$= 2993\#$$

FOR EXISTING MAIN STORY, WALL PLATE HEIGHT IS APPROX. 9'-2 1/2"

CONSIDER SHEAR WALL SEGMENTS MEETING 3 1/2 : 1 ASPECT RATIO -

$$L_{MIN} = \frac{9.208}{3.5} = 2.63'$$

(2'-8" ±)

CONT'D

EXISTING WALL LENGTHS:

$$L_o \approx 4.625 + 4.75 + 4 + 3.42 + 3 = 19.8'$$

$$v = \frac{2993}{19.8} = 151 \text{ PLF}$$

TOO HIGH FOR STRAIGHT BOARD SHEATHED PANELS

CONSIDER 100 PLF ALLOWABLE SHEAR LOAD FOR EXISTING WALLS

NOTE: 4.625' LONG WALL PANEL WILL BE REMOVED FOR NEW BAY (ALSO CONSERVATIVELY CONSIDER 6" AT NORTH END OF 4.75' WALL PANEL IS REMOVED)

NET WALL LENGTHS AFTER BAY IS INCORPORATED -

$$L_n = 4.75 - 0.5 + 4 + 3.42 + 3 = 14.67'$$

$$V_{ALLOW} = (14.67)(100) = 1467\#$$

DESIGN NEW BAY WALL FOR $V = 2993 - 1467 = 1526\#$ MIN.

TESNER STRUCTURAL ENGINEERS

1534 Southeast 25th Avenue Portland, OR 97214 Phone 503-239-9119 Fax 503-239-9122

LATERAL EVALUATION

CONSERVATIVELY DESIGN NEW SHEAR WALL FOR 2/3 OF TOTAL LOAD TO WEST WALL LINE

$V = (2/3)(2993) = 1995^{\#}$

SAY 2000#

$L = 5'$

$v = \frac{2000}{5} = 400$ PLF

15/32" APA RATED WOOD STRUCTURAL PANELS ON ONE FACE

10d @ 4" O.C. EDGES
10d @ 12" O.C. FIELD

ATTACH SOLE PLATE TO BLOCKING WITH 16d @ 4" O.C.

ATTACH BLOCKING TO MUDSILL WITH SIMPSON A35 @ 16" O.C.

$V = (\frac{16}{12})(400) = 533^{\#}$
$< 695^{\#}$

ATTACH MUDSILL TO BASEMENT WALL WITH (2) SIMPSON UFP

CONT'D

CHECK LENGTH OF NEW BAY ROOF REQ'D TO TRANSFER 2000# IN SHEAR -

USE FULL WIDTH 1/2" PLYWOOD SHEETS - NO UNBLOCKED EDGES (CASE 3 - BLOCKED)

10d @ 4" O.C. BOUNDARIES
10d @ 6" O.C. OTHER PANEL EDGES
10d @ 12" O.C. FIELD

$V_{ALLOW} = 385$ PLF
≈ 400 OK

$L_{REQ} = \frac{2000}{385} = 5.2'$

LENGTH OF NEW ROOF CONSTRUCTION IS APPROX. 12'-4" >> 5.2'

CHECK TRANSFER OF SHEAR AT NEW ROOF LEDGER CONNECTION TO EXISTING 2ND FLR. RIM BOARD -

FOR 1/4" x 4 1/2" SIMPSON SDS SCREWS @ 8" O.C.

$V = (\frac{12}{8})(1.6)(190)$
$= 456$ PLF OK

CONT'D

USE SIMPSON LTP4 @ 24" O.C. FOR ENTIRE BAY EXTENSION TO ATTACH BLOCKING TO WALL TOP PLATE AT LOW END OF BAY RAFTERS

CHECK SHEAR TRANSFER AT FLOOR - USE FULL WIDTH 3/4" PLYWOOD SHEETS - NO UNBLOCKED EDGES (CASE 3 - BLOCKED) - USE NAIL PATTERN SAME AS NEW BAY ROOF - OK BY COMPARISON TO ROOF (USE 10d @ FLOOR)

FLOOR TIE AT ENDS OF 5' SHEAR WALL PANEL:

$T = (400)(8.75)$
$= 3500^{\#}$

SIMPSON MSTC 40

TESNER STRUCTURAL ENGINEERS

1534 Southeast 25th Avenue Portland, OR 97214 Phone 503-239-9119 Fax 503-239-9122

(D) BEAM @ FLOOR TIE

$P = 3500\#$

USE $3\frac{1}{2} \times 7\frac{1}{4}$ LVL (SEE ATTACHED OUTPUT)

$R_1 = \left(\frac{1.67}{13.67}\right)(3500) = 428\#$

ATTACH LVL TO EXIST. 6x8 WITH (2) SIMPSON LTS12

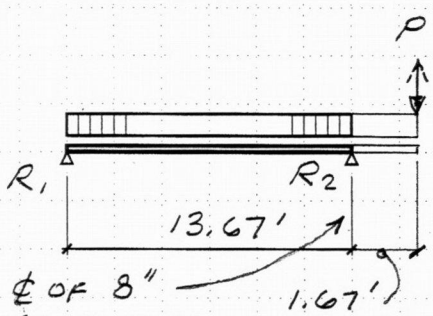

$R_2 = \left(\frac{15.33}{13.67}\right)(3500)$
$= 3925\#$

USE 5/8" DIA. THREADED ROD FOR HOLDOWN (DRILL & EPOXY WITH SIMPSON SET-XP OR HILTI HIT-RE 500-SD ADHESIVE) WITH 10" MINIMUM EMBEDMENT (SEE COLUMN AT RIGHT)

BEARING ON LVL –

$A_{REQ} = \frac{3925}{750} = 5.23\ IN^2$

(E) UPPER FLOOR JOIST

$w_{DL} = \left(\frac{16}{12}\right)(12) = 16\ PLF$

$w_{LL} = \left(\frac{16}{12}\right)(40) = 53\ PLF$

EXISTING JOISTS ARE $1\frac{5}{8}" \times 7\frac{1}{4}"$ ACTUAL – CONSIDER AS D.F. NO.1 & BTR. (TIGHT GRAIN OLD GROWTH LUMBER)

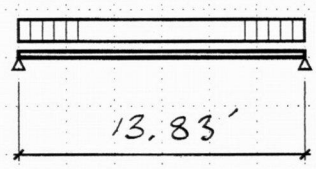

$\Delta_{ALLOW} = \frac{(13.83)(12)}{360}$
$= 0.46" \approx 0.47"$

FOR LIVE LOAD

EXISTING JOISTS OK

BEARING ON D.F. PLATE –

$A_{REQ} = \frac{3925}{625} = 6.28\ IN^2$

FOR $3\frac{1}{2} \times 3\frac{1}{2}$ BEARING AREA:

$A = (3.5)^2 = 12.25\ IN^2$

OK

FOR THREADED ROD EMBEDMENT FOLLOW ATACH HILTI DESIGN PROCEDURE

USE 5/8" DIA. ASTM A36 THREADED ROD ($T_{ALLOW} = 5900\#$ OK)

$f_y = 36{,}000\ PSI$
$f'_c = 2500\ PSI$ ASSUMED
$\psi_t = 1.0$
$\psi_e = 1.0$
$\psi_s = 0.8$ FOR 5/8" DIA.
$\lambda = 1.0$
$c_b = 1.75"$
$K_{tr} = 0$

FOR 5/8 - 11 ROD:

$d_b = 0.625 - \frac{0.9743}{11}$
$= 0.5364"$

$\frac{c_b + K_{tr}}{d_b} = \frac{1.75 + 0}{0.5364}$
$= 3.26 > 2.5$
USE 2.5

$l_d = \left[\frac{3}{40}\frac{36000}{\sqrt{2500}}\frac{1 \times 1 \times 0.8 \times 1}{2.5}\right] \times 0.5364$
$= 9.3"$ USE 10"

TESNER STRUCTURAL ENGINEERS

1534 Southeast 25th Avenue Portland, OR 97214 Phone 503-239-9119 Fax 503-239-9122

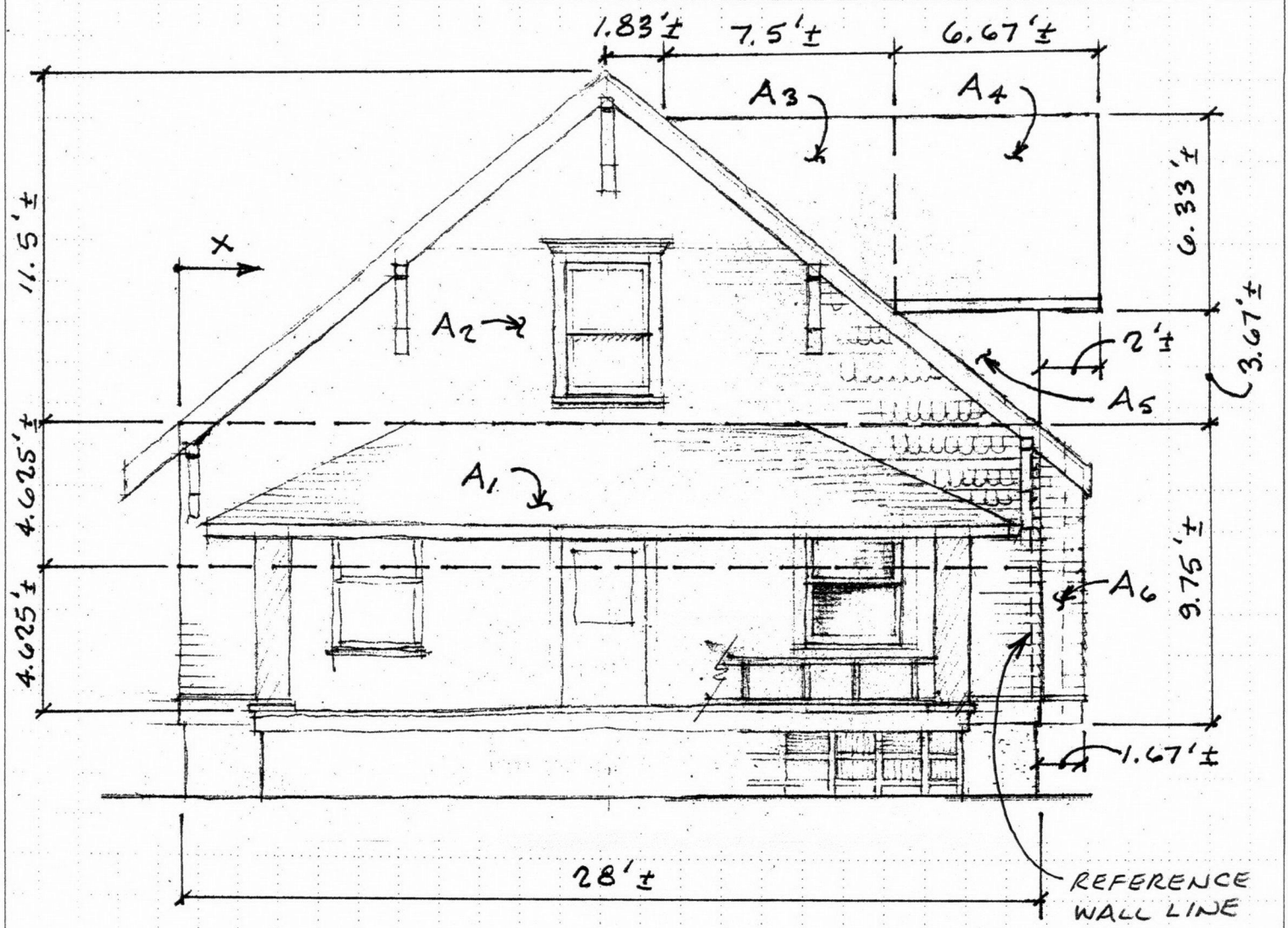

$A_1 = (4.625)(28) = 129.5\ FT^2$

$A_2 = (\frac{1}{2})(28)(11.5) = 161\ FT^2$

$A_3 = (\frac{1}{2})(7.5)(6.33) = 23.7\ FT^2$

$A_4 = (6.67)(6.33) = 42.2\ FT^2$

$A_5 = (\frac{1}{2})(4.67)(3.67) = 8.6\ FT^2$

$A_6 = (1.67)(9.75) = 16.3\ FT^2$

$X_1 = \frac{28}{2} = 14'$

$X_2 = \frac{28}{2} = 14'$

$X_3 = 14 + 1.83 + (\frac{2}{3})(7.5) = 20.83'$

$X_4 = 14 + 1.83 + 7.5 + (\frac{1}{2})(6.67) = 26.67'$

$X_5 = 14 + 1.83 + 7.5 + (\frac{2}{3})(4.67) = 26.4'$

$X_6 = 28 + (\frac{1}{2})(1.67) = 28.83'$

PROJECTED AREAS FOR WIND LOADS

Project: 1406 N. Winchell Street
Residential Remodel
Client: Larry Mills

Proj. No.:
By: JAT
Date: June 2013
Sheet No.: 4

Tesner Structural Engineers
1534 S.E. 25th Avenue
Portland, Oregon 97214

Title : 1406 N. Winchell Street **Job #**
Dsgnr: JAT **Date:**
Description : Residential Remodel

Scope :

Rev: 580000
User: KW-0605936, Ver 5.8.0, 1-Dec-2003
(c)1983-2003 ENERCALC Engineering Software

Multi-Span Timber Beam

Description Beam D - LVL at shear wall

General Information

Code Ref: 2001 NDS, 2003 IBC, 2003 NFPA 5000. Base allowables are user defined

Truss Joist - MacMillan, MicroLam 1.9 E		Fb : Basic Allow	2,600.0 psi	Elastic Modulus	1,900.0 ksi
Spans Considered Continuous Over Support		Fv : Basic Allow	285.0 psi	Load Duration Factor	1.600

Timber Member Information

Description		Backspan	Cantilever
Span	ft	13.67	1.67
Timber Section		MicroLam: 3.5x7.25	MicroLam: 3.5x7.25
Beam Width	in	3.500	3.500
Beam Depth	in	7.250	7.250
End Fixity		Pin - Pin	Pin - Free
Le: Unbraced Length	ft	0.00	0.00
Member Type		Sawn	Sawn

Loads

Live Load Used This Span ?		**Yes**	**Yes**
Point #1 Dead Load	lbs		
Live Load	lbs		3,500.00
@ X	ft		1.670

Results

Mmax @ Cntr	in-k	0.0	0.0
@ X =	ft	0.00	0.00
Max @ Left End	in-k	0.0	-70.1
Max @ Right End	in-k	-70.1	0.0
fb : Actual	psi	2,287.6	2,287.6
Fb : Allowable	psi	4,160.0	4,160.0
		Bending OK	**Bending OK**
Shear @ Left	k	0.43	3.50
Shear @ Right	k	0.43	0.00
fv : Actual	psi	25.3	206.9
Fv : Allowable	psi	456.0	456.0
		Shear OK	**Shear OK**

Reactions & Deflection

DL @ Left	k	0.00	0.00
LL @ Left	k	-0.43	3.93
Total @ Left	k	**-0.43**	**3.93**
DL @ Right	k	0.00	0.00
LL @ Right	k	3.93	0.00
Total @ Right	k	**3.93**	**0.00**
Max. Deflection	in	0.573	-0.407
@ X =	ft	7.93	1.67

Query Values

Location	ft	0.00	0.00
Moment	in-k	0.0	-70.1
Shear	k	-0.4	3.5
Deflection	in	0.0000	0.0000

Tesner Structural Engineers
1534 S.E. 25th Avenue
Portland, Oregon 97214

Title : 1406 N. Winchell Street **Job #**
Dsgnr: JAT **Date:**
Description : Residential Remodel

Scope :

Rev: 580000
User: KW-0605936, Ver 5.8.0, 1-Dec-2003
(c)1983-2003 ENERCALC Engineering Software

Multi-Span Timber Beam

Description Existing Second Floor Joists E

General Information

Code Ref: 2001 NDS, 2003 IBC, 2003 NFPA 5000. Base allowables are user defined

Douglas Fir - Larch, No.1 & Better		Fb : Basic Allow	1,200.0 psi	Elastic Modulus	1,800.0 ksi
All Spans Considered as Individual Beams		Fv : Basic Allow	180.0 psi	Load Duration Factor	1.000

Note: Repetitive Member Stress Increase of 1.15 being used for all members under 4" wide

Timber Member Information

Description		Joist	LL only
Span	ft	13.83	13.83
Timber Section		2x8 1.625 act	2x8 1.625 act
Beam Width	in	1.625	1.625
Beam Depth	in	7.250	7.250
End Fixity		Pin - Pin	Pin - Pin
Le: Unbraced Length	ft	0.00	0.00
Member Type		Sawn	Sawn

Loads

Live Load Used This Span ?		**Yes**	**Yes**
Dead Load	#/ft	16.00	
Live Load	#/ft	53.00	53.00

Results

Mmax @ Cntr	in-k	19.8	15.2
@ X =	ft	6.91	6.91
Max @ Left End	in-k	0.0	0.0
Max @ Right End	in-k	0.0	0.0
fb : Actual	psi	1,390.6	1,068.2
Fb : Allowable	psi	1,656.0	1,656.0
		Bending OK	**Bending OK**
Shear @ Left	k	0.48	0.37
Shear @ Right	k	0.48	0.37
fv : Actual	psi	55.9	42.9
Fv : Allowable	psi	180.0	180.0
		Shear OK	**Shear OK**

Reactions & Deflection

DL @ Left	k	0.11	0.00
LL @ Left	k	0.37	0.37
Total @ Left	k	**0.48**	**0.37**
DL @ Right	k	0.11	0.00
LL @ Right	k	0.37	0.37
Total @ Right	k	**0.48**	**0.37**
Max. Deflection	in	-0.611	-0.470
@ X =	ft	6.91	6.91

Query Values

Location	ft	0.00	0.00
Moment	in-k	0.0	0.0
Shear	k	0.5	0.4
Deflection	in	0.0000	0.0000

Hilti North America
Field Office
Tim Nordstrom, PE, CSI, LEED®
Senior Field Engineer | Seattle, Portland & Alaska
25304 153rd ST CT E, Buckley, WA 98321

C 206-330-8055 | **E** timothy.nordstrom@hilti.com
www.us.hilti.com

May 26, 2009

Subject: Post-Installed Hold-Down Anchor Rods in Concrete Stem Wall – Example Calculation.

All dimensions shown in the graphic are in inches and the tension load is in pounds and is a factored load. Design assumptions:
Threaded Rod, 7/8" diameter, Hilti HAS-E Rod
f_y = 58,000 psi, f_u = 72,500 psi
Concrete, f'c = 2,500 psi

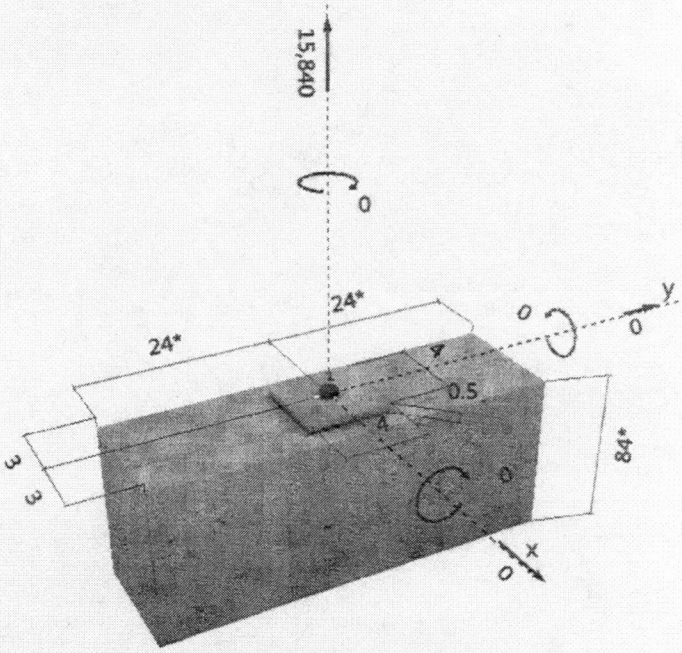

This post-installed anchor falls outside the scope of the ICC approval ESR 2322 for Hilti HIT-RE 500-SD Epoxy Adhesive Anchoring System. The 3 inch edge distance is less then the minimum required 4 3/8 inches for a 7/8 diameter threaded rod. Therefore a potential splitting failure could occur and a different design method is needed that can address the potential for splitting.

Hilti proposes using ACI 318, Equation 12-1 straight rebar development as a rational alternative method for calculating this condition. The development length, l_d, would become the embedment length for the anchor rod.

$$l_d = \left(\frac{3}{40} \frac{f_y}{\sqrt{f'_c}} \frac{\psi_t \psi_e \psi_s \lambda}{\left(\frac{c_b + K_{tr}}{d_b} \right)} \right) d_b$$

Based on these values:

f_y= 58,000 psi	ψ_t = 1.0	ψ_s = 1.0	c_b= 3"
f'_c= 2,500 psi	ψ_e = 1.0	λ = 1.0	K_{tr}= 0

Use d_b= 0.7667" because the threads reduce the cross sectional area of a threaded rod, the bar diameter should be reduced a "nominal" rod diameter was calculated by using $A_{nominal}$ = 0.6013 in^2 vs. $A_{effective}$ = 0.4617 in^2.

$$l_d = \left(\frac{3}{40} \frac{58000}{\sqrt{2500}} \frac{1 \times 1 \times 1 \times 1}{(2.5)} \right) 0.7667 = (0.075 \times 1160 \times 0.4) 0.7667 = 27 \text{ inches}$$

This design will fully develop the yield strength of the threaded rod.

ADHESIVE SYSTEM SPECIFICATION:
Hilti HIT-RE 500-SD Epoxy Anchor with Hilti HAS-E 7/8" diameter threaded rod (or7/8" diameter ASTM F1554 Gr 55 Rod) set is a 1" diameter hammer drilled hole, 27 inches deep.

If there are any questions regarding this calculation, please contact me.

Hilti Center Locations

Seattle, WA	555 S. Lander	(206) 624-6798
Bellevue, WA	12031 Northup Way Ste 202	(425) 453-3172
Portland, OR	316 SE Taylor Street	(503) 274-8073
Anchorage, AK	330 E. International Airport Rd	(907) 344-8351