EQUILIBRIUM

ENGINEERS LLC

March 30, 2009

Tom Yount
Andersen Construction
6712 N. Cutter Circle
Portland, OR 97217

RE: PPMC 4J Surgery Light/Wound Care (ACCO #09PPD015)
EE LLC Project No. 09034

Dear Tom:

Attached please find calculation sheet C1 which verifies the structural adequacy of the new surgery light boom support as shown on Structural Drawing SK-1 attached. Design is based on the provisions of the 2006 International Building Code with State of Oregon Amendments.

Please call if you have any questions.

Sincerely,

Ed Quesenberry, S.E.
Principal

STRUCTURAL REGISTERED PROFESSIONAL ENGINEER
JULY 22, 1
EDWARD P. QUESENBERRY
EXPIRES: 12/31/12

16325 Boones Ferry Road, Suite 202 ■ Lake Oswego, Oregon 97035
Phone 503.636.8388 ■ Cell 503.803.8576 ■ Fax 503.636.2090 ■ Email edq@equilibriumllc.com

Project PMC 4J	EQUILIBRIUM ENGINEERS	By Q	Sheet #
Location		Date 12/7/09	e1
Client ACCO		Revised	Job #
		Date	090824

LIGHT BEAM MOUNT

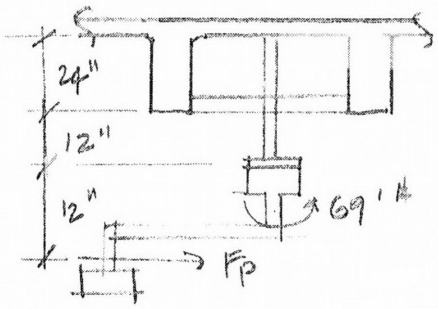

WEIGHT = 60#

$M_{DEAD\ UP} = 69'\#$

$M_{SEISMIC} = .30(60)(\frac{12''}{12}) = 18'\#$

$M_{TOT} = 69 + 18 = 87'\#$

$R_T = [87 + 20(1')]/2' = 53\#$

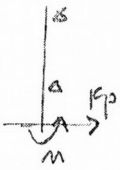

$R_{B_H} = 73\#$

$R_{B_V} = 60\#/2 = 30\#$

BY INSP. $\frac{1}{2}''\phi \times 2\frac{1}{2}''$

HILTI HB-72 OK

$Sr_{BEAM} = 87(12)/.66(46000) = .03$

HSS $2\frac{1}{2} \times 2\frac{1}{2} \times \frac{1}{4}$ OK

EXPIRES 12/31/12

EQUILIBRIUM ENGINEERS

16325 Boones Ferry Road
Suite 202
Lake Oswego, Oregon 97035

Phone: 503.636.8388
Cell: 503.803.8576
Fax: 503.636.2090

STRUCTURAL REGISTERED PROFESSIONAL ENGINEER 19402 OREGON July 22, 1997 EDWARD P. QUESENBERRY

EXPIRES 12/31/2010

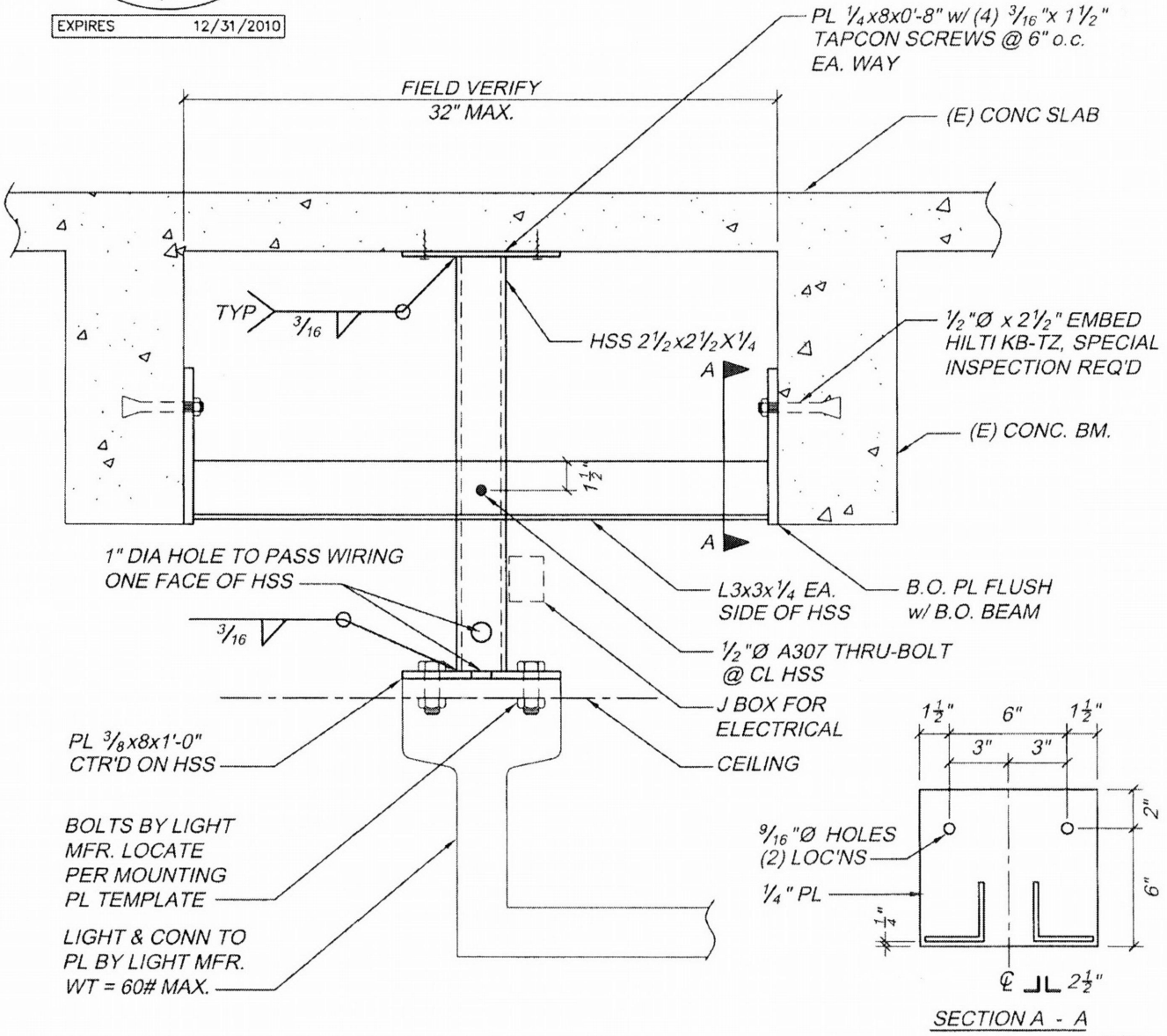

355 LIGHT BOOM SUPPORT

1 1/2"=1'-0"

SK-1

PPMC 4J SURGERY LIGHT SUPPORT	SK-1
4/3/09	JOB NO. 09034

EQUILIBRIUM ENGINEERS LLC

MICRO

1

December 2, 2009

Tom Yount
Andersen Construction
6712 N. Cutter Circle
Portland, OR 97228

City of Portland
REVIEWED FOR CODE COMPLIANCE
DEC 10 2009
09-175400-FA
Permit Number

RE: Providence Portland Medical Center—OR #16
Overhead Boom Capacity Assessment
EE LLC Job No. 09114

Dear Tom:

Attached please find calculation sheets C1 and C2 which verify the structural adequacy of the existing steel overhead boom support in OR #16 to support the relocated AlphaKing overhead unit. Design is based on the provisions of the 2006 International Building Code with State of Oregon Amendments and on information on the AlphaKing unit provided by NuAire (attached).

Our analysis applies to the existing boom support only. The connection of the equipment to the existing boom is the responsibility of the equipment vendor.

Please call if you have any questions.

Sincerely,

Ed Quesenberry, S.E.
Principal

STRUCTURAL REGISTERED PROFESSIONAL ENGINEER 19402 OREGON JULY 22, 1997 EDWARD P. QUESENBERRY
EXPIRES: 12/31/12

09-175400-FA

16325 Boones Ferry Road, Suite 202 ■ Lake Oswego, Oregon 97035
Phone 503.636.8388 ■ Cell 503.803.8576 ■ Fax 503.636.2090 ■ Email edq@equilibriumllc.com

B4

Project PPMC OR #16	EQUILIBRIUM ENGINEERS	By Q	Sheet # C1
Location		Date 11/10/09	
Client AWO		Revised	Job # 09114
		Date	

OVERHEAD BOOM MOUNT

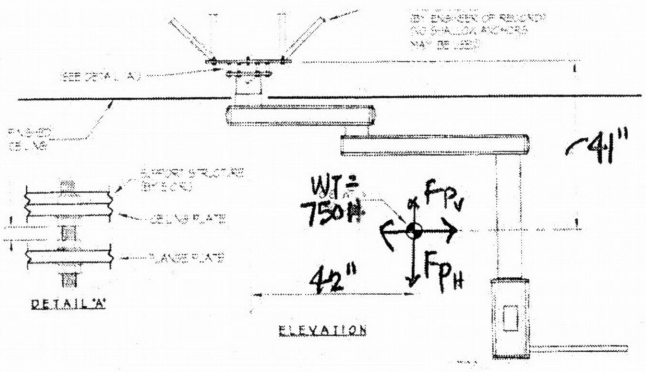

SEISMIC FORCES

$$F_p = \frac{.4 a_p S_{DS} W_p}{\frac{R_p}{I_p}}\left(1 + 2\left(\frac{z}{h}\right)\right) \quad (z/h = 1.0)$$

$a_p = 2.5$ $\quad S_{DS} = 0.72$

$R_p = 3.0$ $\quad I_p = 1.5$

$$F_p = \frac{.4(2.5)(.72)W_p}{3.0/1.5}(3)$$

$= 1.08\,W_p$ ← CONTROLS

$F_{PMAX} = 1.6\,S_{DS} I_p W_p$

$= 1.73\,W_p$

$F_p = 1.08(750) = \underline{810\#}$

$F_{PV} = .2 S_{DS} W_p = .2(.72)(750)$

$= \underline{108\#}$

BOOM MOUNT APPLIED LOADS (ASD LEVEL)

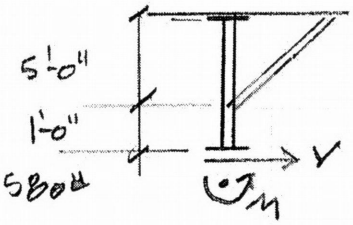

$V = F_{PH} = \frac{810}{1.4} = 580\#$

$M_D = 750\#(42") = 31.5$ K·IN

$M_{SEISMIC} = 580(41") + 108(42)$

$= 28.3$ K·IN

FOR D + .75 E

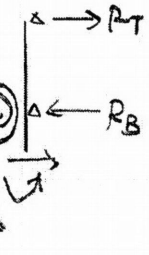

$M_{APPLIED} = 31.5 + .75(28.3 + .580(12))$

$= 57.9$ K·IN ← CONTROLS

FOR .6D + E

$M_{APPLIED} = .6(31.5) + 28.3 + .580(12)$

$= 54$ K·IN

$R_B = 57.9/60" + 580 = 1545\#$

$R_T = 57.9/60 = 965\#$

CHECK BRACE $\angle 3\times3\times\frac{1}{4}$

$F_{BR} = 1545(1.414) = 2185\#$

$l_{BR} = 5(1.414) = 7.07'$

$Kl/r = 7.07(12)/.93 = 91$

$F_a = 14.1$ ksi

$P_A = 14.1(1.44) = 20^K > 2.2^K$ OK

Project PPMC OR #16	EQUILIBRIUM ENGINEERS LLC	By Q	Sheet # C2
Location		Date 11/10/09	
Client Acco		Revised	Job # 09114
		Date	

BRACE CONNECTION TO DECK

$F_H = F_x = \frac{2185}{1.414}$

$= 1545\#$

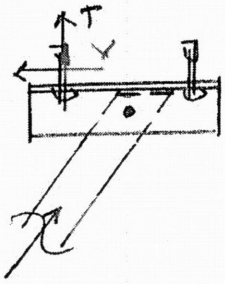

$V/_{ANCHOR} = T/_{ANCHOR}$

$= 1545/2 = 773\#$

ASSUME $\frac{1}{2}$"Φ X $3\frac{1}{4}$ EXP ANCHORS
HILTI KB-T2

$T_A = 1272\#$

$V_A = 2039\#$

$\frac{773}{1272} + \frac{773}{2039} = .99 < 1.2$ OK

MAIN DROP TUBE 6"Φ STD PIPE

$M = 57.9$ K·IN

$f_b = 57.9/8.5 = 6.8$ KSI

< 23 KSI OK

TOP CONNECTION

$T = 750 + 108 = 858\#$

$V = 965\#$

$T/_{ANCHOR} = 858/6 = 143\#$

$V/_{ANCHOR} = 160\#$

EXP ANCHOR OK BY INSP.

CHECK MOUNTING PL

$T/_{SIDE} = \frac{858}{2} = 429\#$

$M = 58$ K·IN

$T_M = 58/15" = 3900\#$

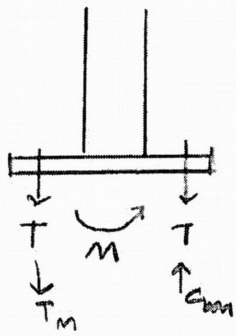

$M_{PL} = (429 + 3900)(4.5")$

$= 19480$ in·#

$S_{PL} = 18(.75^2)/6 = 1.69$

$f_b = 19480/1.69 = 11.5$ KSI

$F_b = .75(36) = 27$ KSI OK

EASE EQUIPMENT ANCHORAGE & SEISMIC ENGINEERING www.equipmentanchorage.com		
GETINGE USA, INC.	DES. R. LA BRIE	SHEET 2
HANAUPORT NON-ALPHAKING SINGLE MOUNT **Dwg # 308079**	JOB NO. 36-0508 DATE 12/19/05	OF 4 SHEETS

SEISMIC ANCHORAGE PRE-APPROVED DETAIL

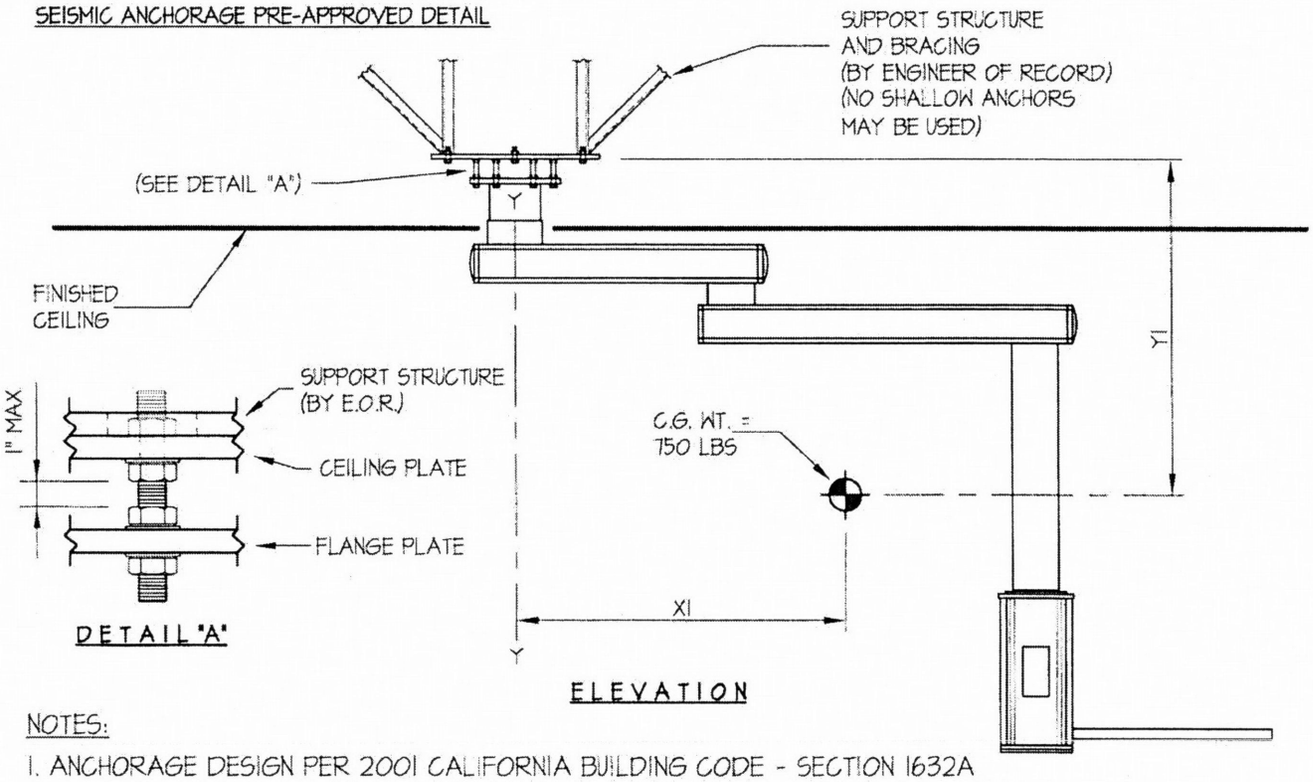

NOTES:

1. ANCHORAGE DESIGN PER 2001 CALIFORNIA BUILDING CODE - SECTION 1632A AND HAVE BEEN FACTORED TO REPRESENT WORKING DESIGN LOADS, NOT ULTIMATE.
   HORIZONTAL FORCE (V_H) = 2.36W (C_a = .66, I_p = 1.5, a_p = 2.5, R_p = 3.0)
   VERTICAL FORCE (V_V) = 0.33(V_H)
2. CENTER OF GRAVITY (C.G.) WEIGHT IS A MAXIMUM. THIS PRE-APPROVAL ENCOMPASSES ALL WEIGHTS UP TO THE MAXIMUM WEIGHT SHOWN.
3. ENGINEER OF RECORD FOR THE BUILDING SHALL PROVIDE SUPPORT STRUCTURE DESIGNED TO SUPPORT WEIGHTS AND FORCES SHOWN.
4. SEE GENERAL NOTES, SHEET 1

REGISTERED PROFESSIONAL ENGINEER
JOSEPH LaBRIE
No. 3566
EXP. 3-31-2006
12/19/05
STRUCTURAL
STATE OF CALIFORNIA

APPROVED
Fixed Equipment Anchorage
Office of Statewide Health Planning and Development

OPA-0984

on

Friday, December 23, 2005

Anthony R. Pike (916) 654-3362

EASE EQUIPMENT ANCHORAGE & SEISMIC ENGINEERING
www.equipmentanchorage.com

GETINGE USA, INC.	DES. R. LA BRIE	SHEET 3
HANAUPORT NON-ALPHAKING SINGLE MOUNT Dwg # 308079	JOB NO. 36-0508 DATE 12/19/05	OF 4 SHEETS

SEISMIC ANCHORAGE PRE-APPROVED DETAIL

FLANGE TUBE TO CEILING GAS FLANGE

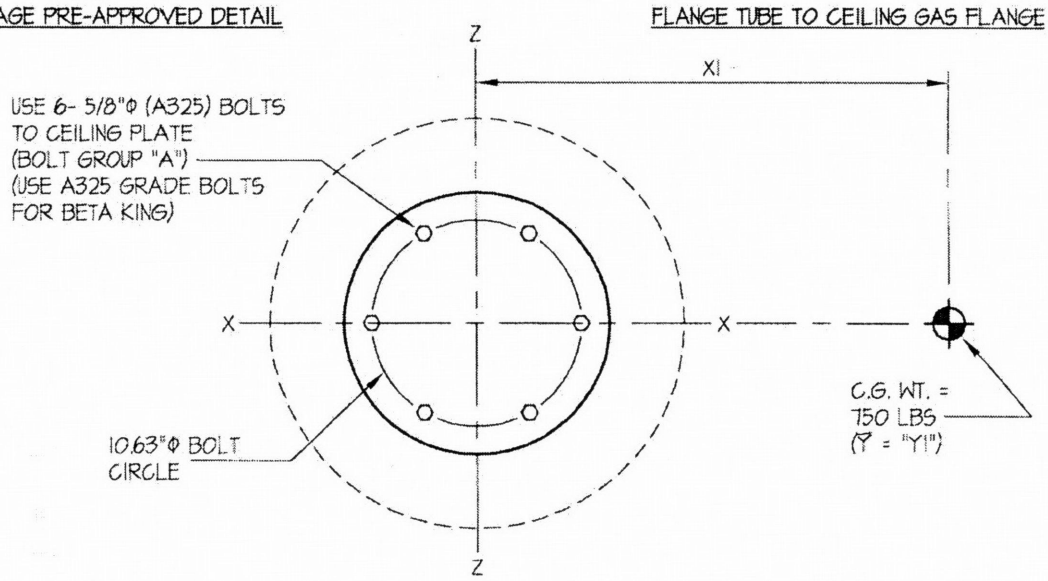

PLAN AT FLANGE TUBE

MODEL	WEIGHT (LBS)	X1 (IN.)	Y1 (IN.)	TMAX LBS/BOLT	VMAX LBS/BOLT
ALPHA	180	42	44	2074	334
ALPHA MAX	600	42	54	7801	500
ALPHA 2000	280	52	29	2918	436
BETA	700	30	35	6191	464
BETA SPRING/MOTOR	725	26	41	6731	448
BETA KING	750	42	41	8273	560
GAMMA	650	42	50	8067	519

REGISTERED PROFESSIONAL ENGINEER
JOSHUA LaBRIE
No. 3566
EXP. 3-31-2006
12/19/05
STRUCTURAL
STATE OF CALIFORNIA

APPROVED
Fixed Equipment Anchorage
Office of Statewide Health Planning and Development
OPA-0984
on
Friday, December 23, 2005
Anthony R. Pike
Anthony R. Pike (916) 654-3362