ITEM #10

City of Portland

Bureau of Fire & Rescue

HIGH-PILED COMBUSTIBLE STORAGE OWNER'S STATEMENT OF INTENDED USE

Site Address: 5224 NE 152ND AVE
Permit No: 13-158902-000-00-FA
Business Owner: Leatherman Tool
Telephone: (503) 253-7826
Building Owner: Prologis
Telephone: (503) 276-7374 (contact Kris Edwards)
Mailing Address: 4380 SW Macadam Ave #285
Portland, OR 97239

Gross building area: ~59,000 Sq. ft. Designated storage area: ~20,000 Sq. ft.
Will this storage area be accessible to the public? Yes (No)

The Portland Fire Bureau's review of this project indicates there is the potential for high-piled combustible storage as defined by the International Fire Code. If this is the case, special fire protection features may be required above and beyond those specified in the regular building permit plan review.

Please check the appropriate box below, sign and return this form to the:
Portland Fire Bureau
Attention: Inspector Jerry Randall
1300 SE Gideon.
Portland, Oregon 97204

If you have any questions, please contact Inspector Jerry Randall at (503) 823-3802 Fax: (503) 823-7291 or e-mail to jerry.randall@portlandoregon.gov If additional fire protection features are required, you will be notified.

☐ This building *will not* be used for high-piled combustible storage as defined by the International Fire Code.

- Storage in piles or on pallets, shelves or racks where the commodity exceeds twelve (12) feet in height, or,
- Tires, Group A plastics, flammable liquids, idle pallets or similar high hazard commodities stacked or stored more than six (6) feet above the floor.

☒ This building *will* be used for high-piled combustible storage, and will be designed to conform to International Fire Code requirements.

NOTE: If you checked this box, you will need to provide additional information on the material(s) stored and the method(s) in which they are stored per Chapter 23 of the International Fire Code.

☐ This building has no identified tenant at this time. I will notify the tenant that there may be special fire department requirements for high-piled combustible storage, and the tenant will be advise to contact the fire department for review prior to occupancy.

Building Owner's Name (*Please Print*)

Kris Hamper, CFO
Business Owner's Name (*Please Print*)

Building Owner's Signature Date

5/31/13
Business Owner's Signature Date

ITEM #10

Trent Inglesby

From: Edwards, Kris <kedwards@prologis.com>
Sent: Wednesday, May 29, 2013 4:43 PM
To: jerry.randall@portlandoregon.gov
Cc: Scott Bacon; Trent Inglesby
Subject: Leatherman racking permit - 5224 NE 152nd place, Portland
Attachments: New Warehouse Questionnaire.doc

Mr. Randall,

One of our new customers, Leatherman, has leased a portion of a building located at 5224 NE 152nd Place. They are working NW Handling Solutions to permit their new racking system in the building, and were provided the attached High Piled Combustible Storage application. The application indicates that the building owner should sign off on the application; however, I believe that it would be more appropriate for someone with Leatherman, who is managing the storage in the building, to sign off on this application. I wanted to check with you on this, given the landlord/tenant dynamic.

Thanks,
Kris

Kristine Edwards, Senior Property Manager
Prologis | Local partner to global trade™
4380 SW Macadam Ave. #285 | Portland, OR 97239 | United States
Direct +1 503 276 7374 | Mobile +1 503 975 2796 | kedwards@prologis.com

This communication, including any attachments, is intended solely for the confidential use of the person(s) named above. If you have received this communication in error, please notify the sender immediately and delete/destroy the original. Any reader other than the intended recipient is hereby notified that any review, dissemination, distribution or copying of this message is strictly prohibited. If this communication contains a proposed agreement, this delivery shall not constitute an offer. If this message contains property or listing information, no warranty or representation, express or implied, is made as to the accuracy of the information, and same is submitted subject to errors, omissions, change of price, rental or other conditions, withdrawal without notice, and to any special listing conditions imposed to by the principal.

ITEM # 11

COLUMBIA SOUTH SHORE WELL FIELD WELLHEAD PROTECTION PROGRAM
HAZARDOUS MATERIAL INVENTORY REPORT

I. **Name:** Leatherman Customer Logistics Portland

II. **Property Owner Name (if different):** Leatherman Tool Group, Inc.

III. **Site Address:** 5224 NE 152nd Place, Portland, OR

IV. **Mailing Address:** PO Box 20595, Portland, OR 97294

V. **E-Mail Address: Sally.koch@leatherman.com**

VI. **Declaration**

I certify that the information provided is true and accurate to the best of my knowledge.

X There will be no hazardous materials, fuels or hazardous waste used, handled, stored or transported at this site.

☐ I will use, handle, store or transport hazardous materials or hazardous waste and have the enclosed the Hazardous Materials Inventory and Site Plan.

☐ I don't know what type of use or business will occupy the building for which I seek a permit. However, I acknowledge that the property is in a groundwater protection area for which there are regulations that may apply to the future use of this property per Portland City Code 21.35.

Signature: _____ Title: Environmental Health and Safety Manager

Print Name: Sally Koch Date: May 29, 2013 Phone #: 503.501.7396

Structural Concepts Engineering

1200 N. Jefferson St, Suite F
Anaheim, CA 92807
Tel: 714.632.7330 Fax: 714.632.7763
e-mail: mail@sceinc.net

REGISTERED PROFESSIONAL ENGINEER
72544PE
OREGON
MAR 11, 2003
ALI ABOLHASSANI
EXPIRATION DATE 12/31/13
MAY 20 2013

Project Name : LEATHERMAN TOOL

Project Number : N-051013-7

Date : 05/20/13

Street Address : 5224 NE 152ND PLACE
City/State : PORTLAND, OR 97230

Scope of Work : SELECTIVE RACK

Structural Concepts Engineering
1200 N. Jefferson Ste. Ste F Anaheim, CA 92807 Tel: 714.632.7330 Fax: 714.632.7763

TABLE OF CONTENTS

Title Page	1
Table of Contents	2
Design Data and Definition of Components	3
Critical Configuration	4
Seismic Loads	5 to 6
Column	7
Beam and Connector	8 to 9
Bracing	10
Anchors	11
Base Plate	12
Slab on Grade	13
Other configurations	14

Design Data

1) The analyses conforms to the requirements of the 2009 IBC and the 2008 RMI/ANSI MH 16.1 Rack Design Manual Steel Storage Racks (RMI) and the ASCE 7-05, section 15.5.3

2) Transverse braced frame steel conforms to ASTM A570, Gr.55, with minimum strength, Fy=55 ksi
Longitudinal frame beam and connector steel conforms to ASTM A570, Gr.55, with minimum yield, Fy=55 ksi
All other steel conforms to ASTM A36, Gr. 36 with minimum yield, Fy= 36 ksi

3) Anchor bolts shall be provided by installer per ICC reference on plans and calculations herein.

4) All welds shall conform to AWS procedures, utilizing E70xx electrodes or similar. All such welds shall be performed in shop, with no field welding allowed other than those supervised by a licensed deputy inspector.

5) The slab on grade is 6" thick with minimum 3500 psi compressive strength. Soil bearing capacity is 1500 psf.

Definition of Components

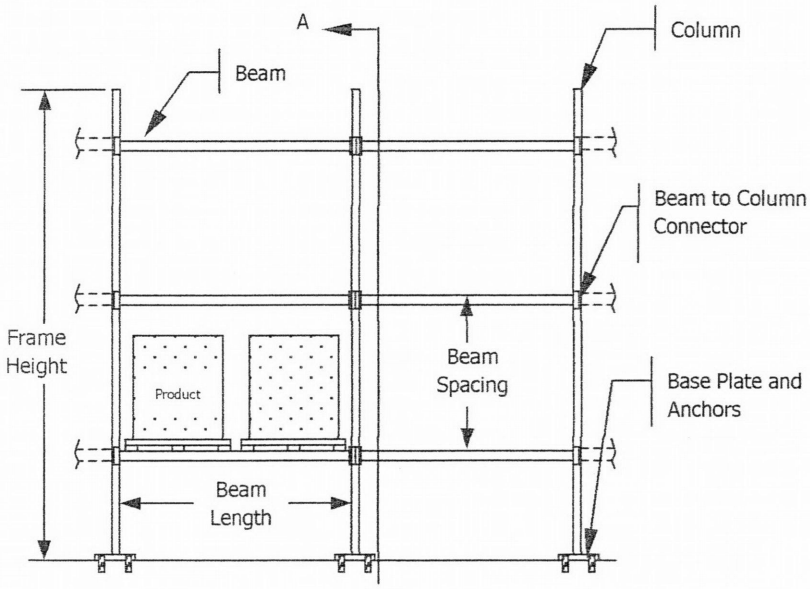

Front View: Down Aisle (Longitudinal) Frame

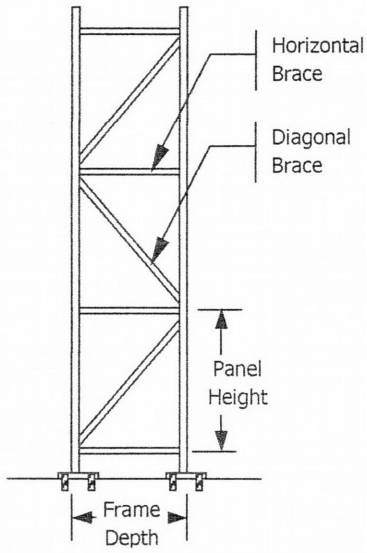

Section A: Cross Aisle (Transverse) Frame

Structural
Concepts
Engineering
1200 N. Jefferson Ste. Ste F Anaheim, CA 92807 Tel: 714.632.7330 Fax: 714.632.7763

By: S.P. Project: LEATHERMAN TOOL Project #: N-051013-7

Configuration & Summary: TYPE A SELECTIVE RACK

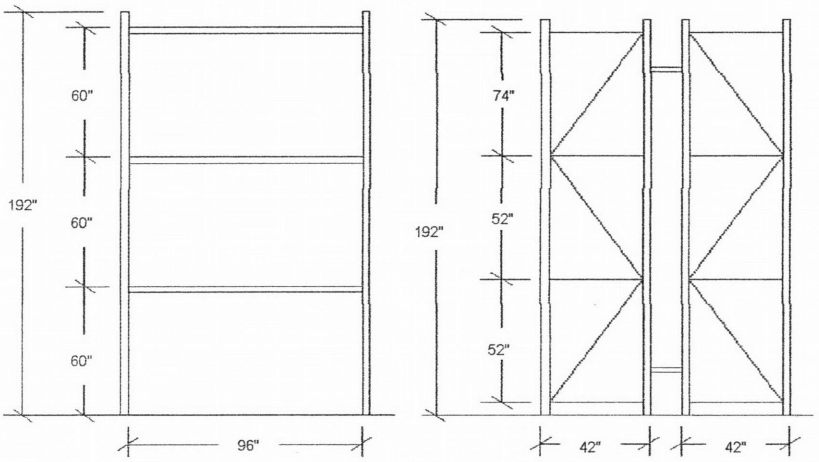

***RACK COLUMN REACTIONS*
ASD LOADS
AXIAL DL= 150 lb
AXIAL LL= 6,000 lb
SEISMIC AXIAL Ps=+/- 2,831 lb
BASE MOMENT= 5,000 in-lb

Seismic Criteria	# Bm Lvls	Frame Depth	Frame Height	# Diagonals	Beam Length	Frame Type
Ss=0.916, Fa=1.134	3	42 in	192.0 in	3	96 in	Single Row

Component	Description				STRESS
Column	Fy=55 ksi	INTLK LU75/3x3x13ga	P=6150 lb, M=10447 in-lb		0.62-OK
Column & Backer	None	None	None		N/A
Beam	Fy=55 ksi	Intlk 485/4.04"deepx2.75"x0.07"	Lu=96 in	Capacity: 5459 lb/pr	0.73-OK
Beam Connector	Fy=55 ksi	Lvl 1: 2 pin OK	Mconn=9501 in-lb	Mcap=11671 in-lb	0.81-OK
Brace-Horizontal	Fy=55 ksi	Intlk 1-1/2x1-1/2x14ga			0.16-OK
Brace-Diagonal	Fy=55 ksi	Intlk 1-1/2x1-1/2x14ga			0.3-OK
Base Plate	Fy=36 ksi	7.75 in x 5 in x 0.375 in		Fixity= 5000 in-lb	0.91-OK
Anchor	2 per Base	0.5" x 3.25" Embed HILTI KWIKBOLT TZ ESR 1917 Inspection Reqd (Net Seismic Uplift=1237 lb)			0.45 - OK
Slab & Soil	6" thk x 3500 psi slab on grade. 1500 psf Soil Bearing Pressure				0.43-OK

Level	Load Per Level	Beam Spcg	Brace	Story Force Transv	Story Force Longit.	Column Axial	Column Moment	Conn. Moment	Beam Connector
1	4,000 lb	60.0 in	52.0 in	161 lb	90 lb	6,150 lb	10,447 "#	9,501 "#	2 pin OK
2	4,000 lb	60.0 in	52.0 in	322 lb	181 lb	4,100 lb	6,776 "#	7,108 "#	2 pin OK
3	4,000 lb	60.0 in	74.0 in	484 lb	271 lb	2,050 lb	4,065 "#	4,567 "#	2 pin OK
			Total:	967 lb	542 lb				

Notes

Structural Concepts Engineering
1200 N. Jefferson Ste. Ste F Anaheim, CA 92807 Tel: 714.632.7330 Fax: 714.632.7763

By: S.P. **Project:** LEATHERMAN TOOL **Project #:** N-051013-7

Seismic Forces Configuration: TYPE A SELECTIVE RACK

Lateral analysis is performed with regard to the 2009 IBC Sec. 2208.1, 2008 RMI/ANSI MH 16.1 Sec 2.6 & ASCE 7-05 sec 15.5.3

Ss= 0.916
S1= 0.314
Fa= 1.134
Fv= 1.771
Sds=2/3*Ss*Fa= 0.693
Sd1=2/3*S1*Fv= 0.371
Ca=0.4*2/3*Ss*Fa= 0.2770
(Transverse, Braced Frame Dir.) R= 4.0
Ip= 1.0
PL_{RF1}= 1.0
Pallet Height=hp= 48.0 in
DL per Beam Lvl= 100 lb

Transverse (Cross Aisle) Seismic Load

V= Cs*Ip*Ws=Cs*Ip*(0.67*LL*PLrf+DL)

Cs1= [Sds/R] * 0.67 *0.67 factor per RMI commentary Sec 2.1 & Sec 2.1 Limit States Reduction for ASD Loading*
= 0.1160
Cs2= 0.14*Sds*0.67
= 0.0650
Cs3= [0.5*S1/R] * 0.67
= 0.0263
Cs-max= 0.1160

Cs-max * Ip= 0.1160
V_{min}= 0.015
Eff Base Shear=Cs= 0.1160
Ws= (0.67*PL_{RF1} * PL)+DL
= 8,340 lb

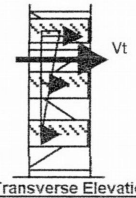

Transverse Elevation

Vtransv=Vt= 0.116 * (300 lb + 8040 lb)
EL= 967 lb
ASD Level Transverse seismic shear per upright

Base Shear Coeff=Cs= 0.1160
ASD Format Loads

Level	PRODUC LOAD/LVL,PL	PL*0.67*PLrf	DL	hi	wi*hi	Fi	Fi*(hi+hp/2)
1	4,000 lb	2,680 lb	100 lb	60 in	166,800	161.2 lb	13,541-#
2	4,000 lb	2,680 lb	100 lb	120 in	333,600	322.3 lb	46,411-#
3	4,000 lb	2,680 lb	100 lb	180 in	500,400	483.5 lb	98,634-#
sum:	12,000 lb	8,040 lb	300 lb	W=8340 lb	1,000,800	967 lb	Σ=158,586

Longitudinal (Downaisle) Seismic Load

Similarly for longitudinal seismic loads, using R=6.0

Cs1=Sd1/(T*R)= 0.0414
Cs2= 0.0650
Cs3= 0.0175
Cs-max= 0.0650

Ws= (0.67 * PL_{RF2} * PL) + DL
= 8,340 lb
Cs=Cs-max*Ip= 0.0650

PL_{RF2}= 1.0
(Longitudinal, Unbraced Dir.) R= 6.0
T= 1.00 sec

Vlong= 0.065 * (300 lb + 8040 lb)
EL= 542 lb *ASD Level Longit. seismic shear per upright*

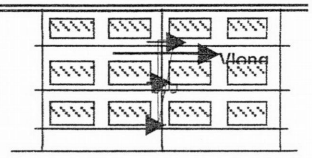

Front View

Level	PRODUC LOAD/LVL,PL	PL*0.67*PLrf	DL	hi	wi*hi	Fi
1	4,000 lb	2,680 lb	100 lb	60 in	166,800	90.3 lb
2	4,000 lb	2,680 lb	100 lb	120 in	333,600	180.7 lb
3	4,000 lb	2,680 lb	100 lb	180 in	500,400	271.0 lb
sum:		8,040 lb	300 lb	W=8340 lb	1,000,800	542 lb

Structural Concepts Engineering
1200 N. Jefferson Ste. Ste F Anaheim, CA 92807 Tel: 714.632.7330 Fax: 714.632.7763

By: S.P. Project: LEATHERMAN TOOL Project #: N-051013-7

Downaisle Seismic Loads Configuration: TYPE A SELECTIVE RACK

Determine the story moments by applying portal analysis. The base plate is assumed to provide partial fixity.

Seismic Story Forces

Vlong= 542 lb
Vcol=Vlong/2= 271 lb
F1= 90 lb
F2= 181 lb
F3= 271 lb

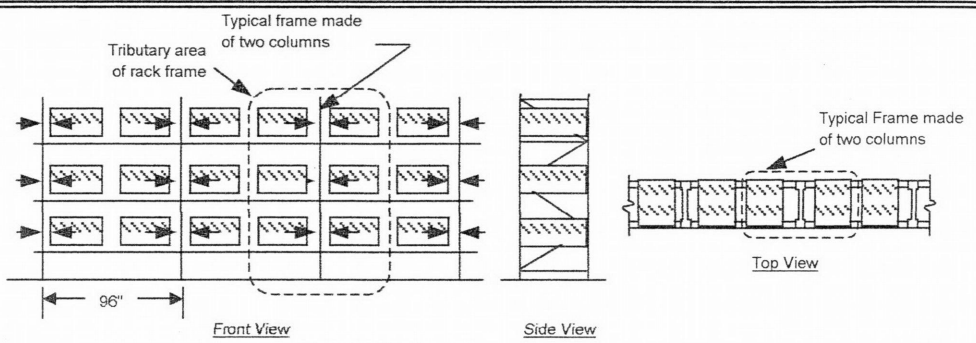

Conceptual System

Seismic Story Moments

Mbase-max= 5,000 in-lb *<=== Default capacity*
Mbase-v= (Vcol*h1eff)/2
= 7,724 in-lb *<=== Moment going to base*
Mbase-eff= Minimum of Mbase-max and Mbase-v
= 5,000 in-lb
M 1-1= [Vcol * h1eff]-Mbase-eff
= (271 lb * 57 in)-5000 in-lb
= 10,447 in-lb

M 2-2= [Vcol-(F1)/2] * h2
= [271 lb - 90.4 lb]*60 in/2
= 6,776 in-lb

h1-eff= h1 - beam clip height/2
= 57 in

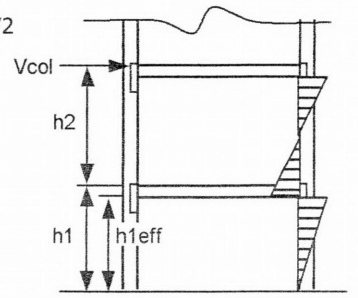

Beam to Column Elevation

Mseis= (Mupper+Mlower)/2

Mseis(1-1)= (10447 in-lb + 6776 in-lb)/2
= *8,611 in-lb*

Mseis(2-2)= (6776 in-lb + 4065 in-lb)/2
= *5,420 in-lb*

Summary of Forces

LEVEL	hi	Axial Load	Column Moment	Mseismic	Mend-fixity	Mconn**	Beam Connector
1	60 in	6,150 lb	10,447 in-lb	8,611 in-lb	4,057 in-lb	9,501 in-lb	2 pin OK
2	60 in	4,100 lb	6,776 in-lb	5,420 in-lb	4,057 in-lb	7,108 in-lb	2 pin OK
3	60 in	2,050 lb	4,065 in-lb	2,033 in-lb	4,057 in-lb	4,567 in-lb	2 pin OK

Mconn= (Mseismic + Mend-fixity)*0.75
Mconn-allow(2 Pin)= 11,671 in-lb

Structural Concepts Engineering
1200 N. Jefferson Ste. Ste F Anaheim, CA 92807 Tel: 714.632.7330 Fax: 714.632.7763

By: S.P. **Project:** LEATHERMAN TOOL **Project #:** N-051013-7

Column (Longitudinal Loads) **Configuration: TYPE A SELECTIVE RACK**

Conforms to the requirements of Chapter C5 of the AISI Cold Formed Steel Design Manual for combined bending and axial loads.

Section Properties

Section: INTLK LU75/3x3x13ga

Aeff = 0.757 in^2	Iy = 0.871 in^4	Kx = 1.7
Ix = 1.320 in^4	Sy = 0.574 in^3	Lx = 58.0 in
Sx = 0.879 in^3	ry = 1.080 in	Ky = 1.0
rx = 1.320 in	Fy= 55 ksi	Ly = 52.0 in
Ωf= 1.67	Cmx= 0.85	Cb= 1.0
E= 29,500 ksi		

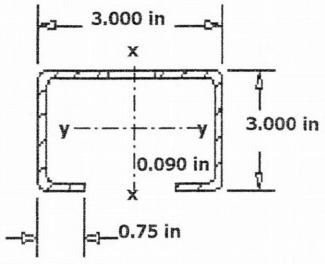

Loads **Considers loads at level 1**

*Critical load case RMI Sec 2.1, item 4: (1+0.11Sds)DL + (1+0.14SDS)PL*0.75+EL*0.75 <= 1.0, ASD Method*

COLUMN DL= 150 lb
COLUMN PL= 6,000 lb
Mcol= 10,447 in-lb
0.11Sds= 0.076175
0.14Sds= 0.09695

Axial Load=P= (1.076175*150 lb)+(1.09695*6000 lb*0.75)
= 5,098 lb

Moment=Mx= Mcol*0.75
= 10447 in-lb * 0.75
= 7,835 in-lb

Axial Analysis

KxLx/rx = 1.7*57.98"/1.3196"
= 74.7

KyLy/ry = 1*52"/1.08"
= 48.1

Fe > Fy/2
Fn= Fy(1-Fy/4Fe)
= 55 ksi*[1-55 ksi/(4*52.2 ksi)]
= 40.5 ksi

Fe= n^2E/(KL/r)max^2
= 52.2ksi

Fy/2= 27.5 ksi

Pa= Pn/Ωc
= 30665 lb/1.92
= 15,971 lb

Pn= Aeff*Fn
= 30,665 lb

Ωc= 1.92

P/Pa= 0.32 > 0.15

Bending Analysis

Check: P/Pa + (Cmx*Mx)/(Max*μx) ≤ 1.0
P/Pao + Mx/Max ≤ 1.0

Pno= Ae*Fy
= 0.757 in^2 *55000 psi
= 41,635 lb

Pao= Pno/Ωc
= 41635lb/1.92
= 21,685 lb

Myield=My= Sx*Fy
= 0.879 in^3 * 55000 psi
= 48,345 in-lb

Max= My/Ωf
= 48345 in-lb/1.67
= 28,949 in-lb

Pcr= n^2EI/(KL)max^2
= n^2*29500 ksi/(1.7*57.98 in)^2
= 39,559 lb

μx= {1/[1-(Ωc*P/Pcr)]}^-1
= {1/[1-(1.92*5098 lb/39559 lb)]}^-1
= 0.75

Combined Stresses

(5098 lb/15971 lb) + (0.85*7835 in-lb)/(28949 in-lb*0.75) =	0.62	< 1.0, OK	(EQ C5-1)
(5098 lb/21685 lb) + (7835 in-lb/28949 in-lb) =	0.51	< 1.0, OK	(EQ C5-2)

Structural Concepts Engineering
1200 N. Jefferson Ste, Ste F Anaheim, CA 92807 Tel: 714.632.7330 Fax: 714.632.7763

By: S.P. | Project: **LEATHERMAN TOOL** | Project #: N-051013-7

BEAM Configuration: TYPE A SELECTIVE RACK

DETERMINE ALLOWABLE MOMENT CAPACITY

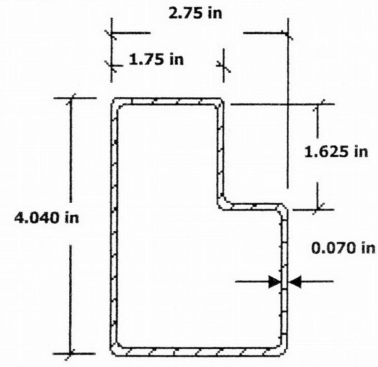

A) Check compression flange for local buckling (B2.1)

w= c - 2*t -2*r
= 1.75 in - 2*0.07 in - 2*0.07 in
= 1.470 in
w/t= 21
l=lambda= [1.052/(k)^0.5] * (w/t) * (Fy/E)^0.5 Eq. B2.1-4
= [1.052/(4)^0.5] * 21 * (55/29500)^0.5
= 0.477 < 0.673, Flange is fully effective Eq. B2.1-1

B) check web for local buckling per section b2.3

f1(comp)= Fy*(y3/y2)= 49.39 ksi
f2(tension)= Fy*(y1/y2)= 101.16 ksi
Y= f2/f1 Eq. B2.3-5
= -2.048
k= 4 + 2*(1-Y)^3 + 2*(1-Y) Eq. B2.3-4
= 66.73
flat depth=w= y1+y3
= 3.760 in
w/t= 53.71428571 OK
l=lambda= [1.052/(k)^0.5] * (w/t) * (f1/E)^0.5
= [1.052/(66.73)^0.5] * 3.76 * (49.39/29500)^0.5
= 0.283 < 0.673
be=w= 3.760 in b2= be/2 Eq B2.3-2
b1= be(3-Y) = 1.88 in
= 0.745
b1+b2= 2.625 in > 1.2336 in, Web is fully effective

Beam= **Intlk 485/4.04"deepx2.75"x0.07"**

Ix=	1.842 in^4
Sx=	0.857 in^3
Ycg=	2.666 in
t=	0.070 in
Bend Radius=r=	0.070 in
Fy=Fyv=	55.00 ksi
Fu=Fuv=	65.00 ksi
E=	29500 ksi
top flange=b=	1.750 in
bottom flange=	2.750 in
Web depth=	4.040 in

Determine effect of cold working on steel yield point (Fya) per section A7.2

Fya= C*Fyc + (1-C)*Fy (EQ A7.2-1)
Lcorner=Lc= (p/2) * (r + t/2)
0.165 in C= 2*Lc/(Lf+2*Lc)
Lflange-top=Lf= 1.470 in = 0.183 in
m= 0.192*(Fu/Fy) - 0.068 (EQ A7.2-4)
= 0.1590
Bc= 3.69*(Fu/Fy) - 0.819*(Fu/Fy)^2 - 1.79 (EQ A7.2-3)
= 1.427
since fu/Fv= 1.18 < 1.2
and r/t= 1 < 7 OK
then Fyc= Bc * Fy/(R/t)^m (EQ A7.2-2)
= 78.485 ksi
Thus, Fya-top= 59.31 ksi (tension stress at top)
Fya-bottom= Fya*Ycg/(depth -Ycg)
= 115.12 ksi (tension stress at bottom)

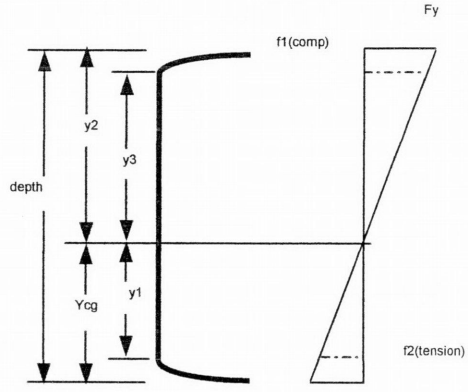

y1= Ycg-t-r= 2.526 in
y2= depth-Ycg= 1.374 in
y3= y2-t-r= 1.234 in

Check allowable tension stress for bottom flange

Lflange-bot=Lfb= Lbottom - 2*r*-2*t
= 2.470 in
Cbottom=Cb= 2*Lc/(Lfb+2*Lc)
= 0.118
Fy-bottom=Fyb= Cb*Fyc + (1-Cb)*Fyf
= 57.77 ksi
Fya= (Fya-top)*(Fyb/Fya-bottom)
= 29.76 ksi
if F= 0.95
Then F*Mn=F*Fya*Sx= 24.23 in-k

Structural Concepts Engineering
1200 N. Jefferson Ste, Ste F Anaheim, CA 92807 Tel: 714.632.7330 Fax: 714.632.7763

By: S.P. | Project: **LEATHERMAN TOOL** | Project #: N-051013-7

BEAM | Configuration: TYPE A SELECTIVE RACK

RMI Section 5.2, PT II

Section

Beam= Intlk 485/4.04"deepx2.75"x0.07"
Ix=Ib= 1.842 in^4
Sx= 0.857 in^3
t= 0.070 in
Fy=Fyv= 55 ksi
Fu=Fuv= 65 ksi
Fya= 59.3 ksi

E= 29500 ksi
F= 150.0
L= 96 in

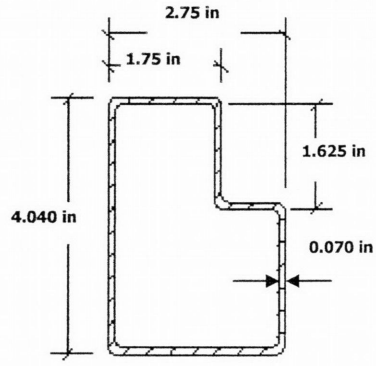

Bending

Mcenter=F*Mn= W*L*W*Rm/8

W=LRFD Load Factor= 1.2*DL + 1.4*PL+1.4*(0.125)*PL ***RMI 2.2, item 5***
FOR DL=2% of PL,

W= 1.599

Rm= 1 - [(2*F*L)/(6*E*Ib + 3*F*L)]
1 - (2*150*96 in)/[(6*29500 ksi*1.842 in^3)+(3*150*96 in)]
= 0.922

if F= 0.95
Then F*Mn=F*Fya*Sx= 48.28 in-k

Thus, allowable load
per beam pair=W= F*Mn*8*(# of beams)/(L*Rm*W)
= 48.28 in-k * 8 * 2/(96in * 0.922 * 1.599)
= 5,459 lb/pair

Mend= W*L*(1-Rm)/8
= (5459 lb/2) * 96 in * (1-0.922)/8
= 2,555 in-lb

Deflection

Dmax= Dss*Rd

Rd= 1 - (4*F*L)/(5*F*L + 10*E*Ib)
= 1 - (4*150*96 in)/[(5*150*96 in)+(10*29500 ksi*1.842 in^4)]
= 0.906 in

if Dmax= L/180
and Dss= 5*W*L^3/(384*E*Ib)

L/180= 5*W*L^3*Rd/(384*E*Ib*# of beams)

solving for W yields,
W= 384*E*I*2/(180*5*L^2*Rd)
= 384*1.842 in^4*2/[180*5*(96 in)^2*0.906)
= 5,553 lb/pair

Allowable load= 5,459 lb/pair

Structural Concepts Engineering
1200 N. Jefferson Ste, Ste F Anaheim, CA 92807 Tel: 714.632.7330 Fax: 714.632.7763

2 Pin Beam to Column Connection TYPE A SELECTIVE RACK

The beam end moments shown herein show the result of the maximum induced fixed end moments form seismic + static loads and the code mandated minimum value of 1.5%(DL+PL)

Mconn max= (Mseismic + Mend-fixity)*0.75
= 9,501 in-lb Load at level 1

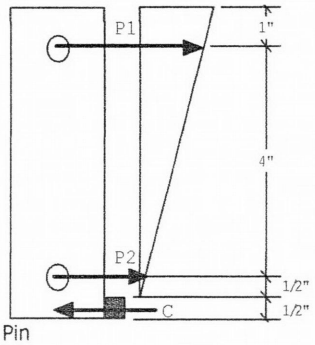

Connector Type= 2 Pin

Shear Capacity of Pin

Pin Diam= 0.44 in Fy= 55,000 psi

Ashear= (0.438 in)^2 * Pi/4
= 0.1507 in^2

Pshear= 0.4 * Fy * Ashear
= 0.4 * 55000 psi * 0.1507in^2
= 3,315 lb

Bearing Capacity of Pin

tcol= 0.090 in Fu= 65,000 psi

Omega= 2.22 a= 2.22

Pbearing= alpha * Fu * diam * tcol/Omega
= 2.22 * 65000 psi * 0.438 in * 0.09 in/2.22
= 2,562 lb < 3315 lb

Moment Capacity of Bracket

Edge Distance=E= 1.00 in Pin Spacing= 4.0 in Fy= 55,000 psi

C= P1+P2 tclip= 0.18 in Sclip= 0.127 in^3
= P1+P1*(0.5"/4.5")
= 1.11 * P1

Mcap= Sclip * Fbending C*d= Mcap = 1.11 d= E/2
= 0.127 in^3 * 0.66 * Fy = 0.50 in
= 4,610 in-lb

Pclip= Mcap/(1.11 * d)
= 4610.1 in-lb/(1.11 * 0.5 in) Thus, P1= 2,562 lb
= 8,306 lb

Mconn-allow= [P1*4.5"+P1*(0.5"/4.5")*0.5"]
= 2562 LB*[4.5"+(0.5"/4.5")*0.5"]
= 11,671 in-lb > Mconn max, OK

Structural Concepts Engineering
1200 N. Jefferson Ste. Ste F Anaheim, CA 92807 Tel: 714.632.7330 Fax: 714.632.7763

By: S.P. **Project: LEATHERMAN TOOL** **Project #: N-051013-7**

Transverse Brace Configuration: TYPE A SELECTIVE RACK

Section Properties

Diagonal Member= Intlk 1-1/2x1-1/2x14ga
Area= 0.315 in^2
r min= 0.488 in
Fy= 55,000 psi
K= 1.0
Ωc= 1.92

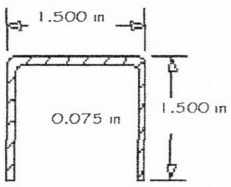

Horizontal Member= Intlk 1-1/2x1-1/2x14ga
Area= 0.315 in^2
r min= 0.488 in
Fy= 55,000 psi
K= 1.0

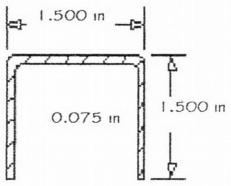

Frame Dimensions

Bottom Panel Height=H= 52.0 in
Frame Depth=D= 42.0 in
Column Width=B= 3.0 in
Clear Depth=D-B*2= 36.0 in
X Brace= NO

Diagonal Member

*Critical load case RMI Sec 2.1, item 4: (1+0.11Sds)DL + (1+0.14SDS)PL*0.75+EL*0.75 <= 1.0, ASD Method, DL=PL=0 for upright brace members*

Vb=Vtransv= 967 lb

Ldiag= [(D-B*2)^2 + (H-6")^2]^1/2
= 58.4 in
Pmax= V*(Ldiag/D) * 0.75
= 1,008 lb

(kl/r)= (k * Ldiag)/r min
= (1 x 58.4 in /0.488 in)
= 119.7 in
Fe= pi^2*E/(kl/r)^2
= 20,320 psi

SINCE Fe<Fy/2,
Fn= Fe
= 20,320 psi

Pn= AREA*Fn
= 0.315 in^2 * 20320 psi
= 6,401 lb

Pallow= Pn/Ω
= 6401 lb /1.92
= 3,334 lb

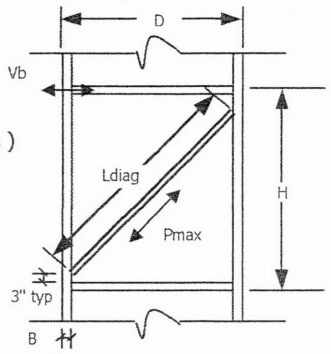

Typical Panel Configuration

Check End Weld
Lweld= 2.5 in
Fu= 65 ksi
tmin= 0.075 in
Weld Capacity= 0.75 * tmin * L * Fu/2.5
= 3,656 lb OK

Pn/Pallow= 0.30 <= 1.0 OK

Horizontal brace

Pmax=V= 725 lb

(kl/r)= (k * Lhoriz)/r min
= (1 x 42 in) /0.488 in
= 86.1 in

Fe= pi^2*E/(kl/r)^2
= 39,275 psi

Fy/2= 27,500 psi

SINCE Fe>Fy/2, Fn=Fy*(1-fy/4fe)
= 35,745 psi

Pn= AREA*Fn
= 0.315in^2*35745 psi
= 11,260 lb

Pallow= Pn/Ωc
= 11260 lb /1.92
= 5,864 lb

Pn/Pallow= 0.16 <= 1.0 OK

Structural Concepts Engineering
1200 N. Jefferson Ste. Ste F Anaheim, CA 92807 Tel: 714.632.7330 Fax: 714.632.7763

By: S.P. | Project: LEATHERMAN TOOL | Project #: N-051013-7

Single Row Frame Overturning | Configuration: TYPE A SELECTIVE RACK

Loads

Load case per RMI Sec 2.1, item 3: (0.6-0.11Sds)DL + (0.6-0.14Sds)PLapp*0.75 - EL*0.75

Vtrans=V= 967 lb

DEAD LOAD PER UPRIGHT=DL= 300 lb
PL PER UPRIGHT=PL= 12,000 lb
PLapp=PL*0.67= 8,040 lb
Wst=(0.523825*DL+0.50305*PLapp*0.75)= 3,190 lb
PL @ TOP= 4,000 lb
DL/Lvl= 100 lb

Σ(Fi*hi)= 158,586 in-lb
Total Dead Load per Bay=DL= 300 lb

(0.6-0.11Sds)= 0.5238
(0.6-0.14Sds)= 0.5031

Frame Depth=D= 42.0 in
Htop-lvl=H= 180.0 in
# Levels= 3
# Anchors/Base= 2
h= 204.0 in
hp= 48.0 in

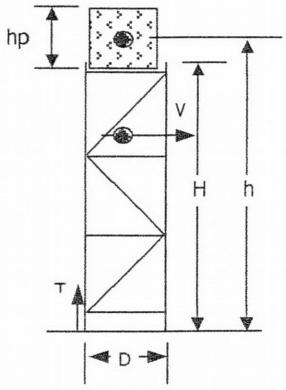

SIDE ELEVATION

Load Case 1: Fully Loaded rack

Vtrans= 967 lb

Movt= Σ(Fi*hi)*0.75
= 118,940 in-lb

Mst= Wst * D/2
= 3190 lb * 42 in/2
= 66,990 in-lb

T= (Movt-Mst)/D
= (118940 in-lb - 66990 in-lb)/42 in
= 1,237 lb
Net Uplift per column

Load Case 2: Top Level Loaded Only

Critical Level= 3

h= 204.0 in

V1=Vtop= Cs * Ip * Ws
= 0.116 * (4000 lb)
= 464 lb
$V2=V_{DL}$= Cs*Ip*DL
= 34 lb
Mst= (0.523825*DL+0.50305*PL*0.75) * D/2
= (100 lb*3 * 0.523825 + 4000 lb*0.50305*0.75)*42 in/2
= 34,992 in-lb

Partially Fixed Base

Movt= [V1*h + V2 * H/2]*0.75
= [464 lb*204 in +34 lb*180 in/2]*0.75
= 73,287 in-lb

T= (Movt-Mst)/D
= (73287 in-lb - 34992 in-lb)/42 in
= 912 lb
Net Uplift per column

Anchor

Check (2) 0.5" x 3.25" Embed HILTI KWIKBOLT TZ anchor(s) per base plate.
Special inspection is required per ESR 1917.

Pullout Capacity=Tcap= 1,520 lb
Shear Capacity=Vcap= 1,840 lb

L.A. City Jurisdiction? NO
Phi= 1

Tcap*Phi= 1,520 lb
Vcap*Phi= 1,840 lb

Fully Loaded:
(619 lb/1520 lb)^1 + (242 lb/1840 lb)^1 = 0.54 <= 1.2 OK

Top Level Loaded:
(456 lb/1520 lb)^1 + (116 lb/1840 lb)^1 = 0.36 <= 1.2 OK

Structural Concepts Engineering
1200 N. Jefferson Ste. Ste F Anaheim, CA 92807 Tel: 714.632.7330 Fax: 714.632.7763

By: S.P. Project: LEATHERMAN TOOL Project #: N-051013-7

Base Plate Configuration: TYPE A SELECTIVE RACK

Section

Baseplate= 7.75 in x 5 in x 0.375 in
Eff Width=W = 7.75 in — a = 2.88 in
Eff Depth=D = 5.00 in — Anchor c.c. =2*a=d = 5.75 in
Column Width=b = 3.00 in — N=# Anchor/Base= 2
Column Depth=dc = 3.00 in — Fy = 36,000 psi
L = 2.38 in
Plate Thickness=t = 0.375 in

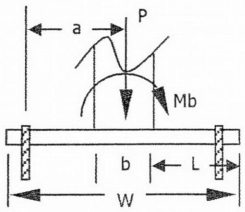

Downaisle Elevation

Down Aisle Loads *Critical load case RMI Sec 2.1, item 4: (1+0.11Sds)DL + (1+0.14SDS)PL*0.75+EL*0.75 <= 1.0, ASD Method*

COLUMN DL= 150 lb
COLUMN PL= 6,000 lb
Base Moment= 5,000 in-lb
0.11Sds= 0.076175
0.14Sds= 0.09695

Axial=P= (1.076175*150 lb)+(1.09695*6000 lb*0.75)
= 5,098 lb

Mb= Base Moment*0.75
= 5000 in-lb * 0.75
= 3,750 in-lb

Axial Load P = 5,098 lb **Mbase=Mb = 3,750 in-lb**

Axial stress=fa = P/A = P/(D*W)
= 132 psi
Moment Stress=fb = M/S = 6*Mb/[(D*B^2]
= 74.9 psi
Moment Stress=fb1 = fb-fb2
= 29.0 psi
M3 = (1/2)*fb2*L*(2/3)*L = (1/3)*fb2*L^2
= 86 in-lb
S-plate = (1)(t^2)/6
= 0.023 in^3/in
fb/Fb = Mtotal/[(S-plate)(Fb)]
= **0.85** **OK**
Tanchor = (Mb-(PLapp*0.75*0.46)(a))/[(d)*N/2]
= -943 lb No Tension

M1= wL^2/2= fa*L^2/2
= 371 in-lb
Moment Stress=fb2 = 2 * fb * L/W
= 45.9 psi
M2= fb1*L^2)/2
= 82 in-lb
Mtotal = M1+M2+M3
= 539 in-lb/in
Fb = 0.75*Fy
= 27,000 psi
F'p= 0.7*F'c
= 2,450 psi OK
Tallow= 1,520 lb **OK**

Cross Aisle Loads *Critical load case RMI Sec 2.1, item 4: (1+0.11Sds)DL + (1+0.14SDS)PL*0.75+EL*0.75 <= 1.0, ASD Method*

Pstatic= 5,098 lb

Movt*0.75= 118,940 in-lb
Frame Depth= 42.0 in
Pseismic= Movt/Frame Depth
= 2,832 lb

P=Pstatic+Pseismic= 7,930 lb

b =Column Depth= 3.00 in

L =Base Plate Depth-Col Depth= 2.38 in

fa = P/A = P/(D*W)
= 205 psi

M= wL^2/2= fa*L^2/2
= 577 in-lb/in

Sbase/in = (1)(t^2)/6
= 0.023 in^3/in

Fbase = 0.75*Fy
= 27,000 psi

fb/Fb = M/[(S-plate)(Fb)]
= **0.91** **OK**

Check uplift load on Baseplate

Check uplift forces on baseplate with 2 or more anchors per RMI 7.2.2. "When the base plate configuration consists of two anchor bolts located on either side of the column and a net uplift force exists, the minimum base plate thickness shall be determined based on a design bending moment in the plate equal to the uplift force on one anchor times 1/2 the distance from the centerline of the anchor to the nearest edge of the rack column"

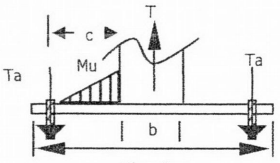

Elevation

Uplift per Column= 1,237 lb
Qty Anchor per BP= 2
Net Tension per anchor=Ta= 619 lb
c= 2.38 in
Mu=Moment on Baseplate due to uplift= Ta*c/2
= 734 in-lb
Splate= 0.117 in^3
[fb/Fb]*0.75= 0.174 **OK**

Structural Concepts Engineering
1200 N. Jefferson Ste. Ste F Anaheim, CA 92807 Tel: 714.632.7330 Fax: 714.632.7763

By: S.P. Project: LEATHERMAN TOOL Project #: N-051013-7

Slab on Grade Configuration: TYPE A SELECTIVE RACK

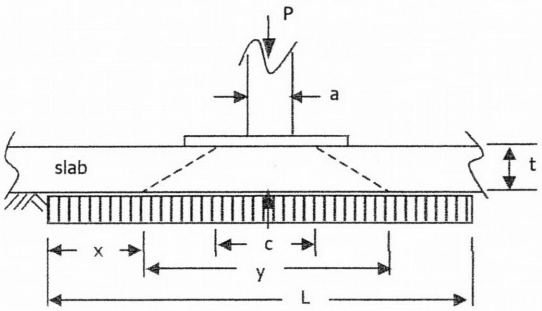

SLAB ELEVATION

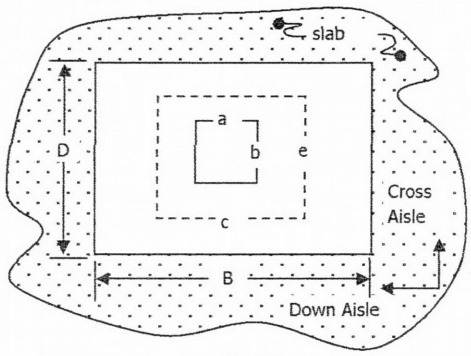

Baseplate Plan View

Concrete
f'c= 3,500 psi
tslab=t= 6.0 in
teff= 6.0 in
phi=Ø= 0.6

Soil
fsoil= 1,500 psf
Movt= 118,939 in-lb
Frame depth= 42.0 in
Sds= 0.693
0.2*Sds= 0.139

75

Base Plate

Effec. Baseplate width=B= 7.75 in width=a= 3.00 in midway dist face of column to edge of plate=c= 5.38 in
Effec. Baseplate Depth=D= 5.00 in depth=b= 3.00 in midway dist face of column to edge of plate=e= 4.00 in

Column Loads

DEAD LOAD=DL= 150 lb per column
unfactored ASD load
PRODUCT LOAD=PL= 6,000 lb per column
unfactored ASD load
P-seismic=EL= (Movt/Frame depth)
= 2,831 lb per column
unfactored ASD load

Load Case 1) (1.2+0.2Sds*DL) + (0.85+0.2Sds*PL) + 1.5*EL RMI SEC 2.2 EQTN 5
= 1.3385*150 lb + 0.9885*6000 lb + 1.5*2831 lb
= 10,378 lb
Load Case 2) (0.9-0.2Sds)DL + (0.9-0.2Sds)*PLapp + 1.5EL RMI SEC 2.2 EQTN 6
= (0.7615*150 lb) + (0.7615*4020 lb) + (1.5*2831 lb)
= 7,422 lb
Load Case 3) 1.2*DL + 1.4*PL RMI SEC 2.2 EQTN 2
= 1.2*150 lb + 1.4*6000 lb
= 8,580 lb

Effective Column Load=Pu= 10,378 lb per column

Puncture

Apunct= [(c+t)+(e+t)]*2*t
= 256.50 in^2

Fpunct= 2.66*phi*sqrt(f'c)
= 94.4 psi
fv/Fv= Pu/(Apunct*Fpunct)
= **0.429** **< 1 OK**

Slab Bending

Pse=DL+PL+E= 10,378 lb

Asoil= (Pse*144)/(fsoil)
= 996 in^2
x= (L-y)/2
= 7.5 in
Fb= 5*(phi)*(f'c)^0.5
= 177.48 psi

L= (Asoil)^0.5
= 31.56 in
M= w*x^2/2
= (fsoil*x^2)/(144*2)
= 290.0 in-lb

y= (c*e)^0.5 + 2*t
= 16.6 in
S-slab= 1*teff^2/6
= 6.0 in^3
fb/Fb= M/(S-slab*Fb)
= **0.272** **< 1, OK**

Structural
Concepts
Engineering
1200 N. Jefferson Ste. Ste F Anaheim, CA 92807 Tel: 714.632.7330 Fax: 714.632.7763

By: S.P. Project: LEATHERMAN TOOL Project #: N-051013-7

Configuration & Summary: TYPE B SELECTIVE RACK W/CARTON FLOW

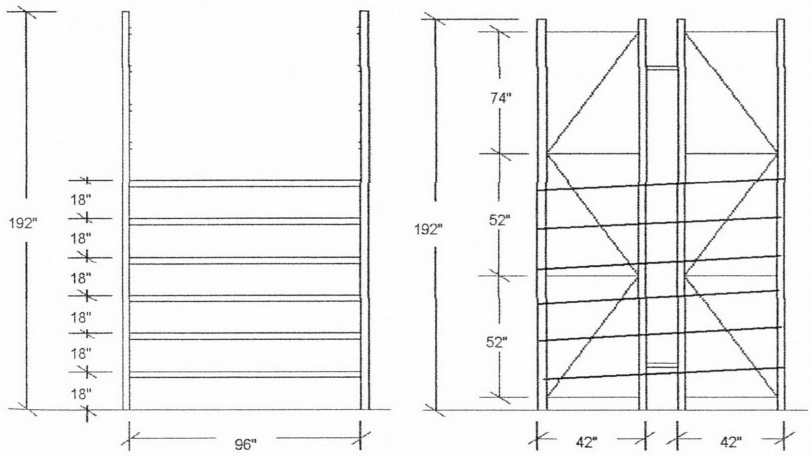

***RACK COLUMN REACTIONS*
ASD LOADS
AXIAL DL= 300 lb
AXIAL LL= 4,500 lb
SEISMIC AXIAL Ps=+/- 1,576 lb
BASE MOMENT= 5,000 in-lb

Seismic Criteria	# Bm Lvls	Frame Depth	Frame Height	# Diagonals	Beam Length	Frame Type
Ss=0.916, Fa=1.134	6	42 in	192.0 in	3	96 in	Single Row

Component	Description				STRESS
Column	Fy=55 ksi	INTLK LU75/3x3x13ga	P=4800 lb, M=1617 in-lb		0.25-OK
Column & Backer	None	None	None		N/A
Beam	Fy=55 ksi	Intlk 485/4.04"deepx2.75"x0.07"	Lu=96 in	Capacity: 5459 lb/pr	0.73-OK
Beam Connector	Fy=55 ksi	Lvl 6: 2 pin OK	Mconn=3472 in-lb	Mcap=11671 in-lb	0.3-OK
Brace-Horizontal	Fy=55 ksi	Intlk 1-1/2x1-1/2x14ga			0.13-OK
Brace-Diagonal	Fy=55 ksi	Intlk 1-1/2x1-1/2x14ga			0.24-OK
Base Plate	Fy=36 ksi	7.75 in x 5 in x 0.375 in		Fixity= 1616 in-lb	0.73-OK
Anchor	2 per Base	0.5" x 3.25" Embed HILTI KWIKBOLT TZ ESR 1917 Inspection Reqd (Net Seismic Uplift=282 lb)			0.167 - OK
Slab & Soil	6" thk x 3500 psi slab on grade. 1500 psf Soil Bearing Pressure				0.3-OK

Level	Load Per Level	Beam Spcg	Brace	Story Force Transv	Story Force Longit.	Column Axial	Column Moment	Conn. Moment	Beam Connector
1	1,000 lb	18.0 in	52.0 in	21 lb	12 lb	4,800 lb	1,617 "#	2,074 "#	2 pin OK
2	1,000 lb	18.0 in	52.0 in	42 lb	24 lb	4,250 lb	1,886 "#	2,136 "#	2 pin OK
3	1,000 lb	18.0 in	74.0 in	63 lb	35 lb	3,700 lb	1,781 "#	2,036 "#	2 pin OK
4	1,000 lb	18.0 in		84 lb	47 lb	3,150 lb	1,622 "#	1,898 "#	2 pin OK
5	1,000 lb	18.0 in		105 lb	59 lb	2,600 lb	1,410 "#	1,719 "#	2 pin OK
6	4,000 lb	18.0 in		454 lb	255 lb	2,050 lb	1,146 "#	3,472 "#	2 pin OK
			Total:	769 lb	431 lb				

Notes

CITY OF PORTLAND, OREGON - BUREAU OF DEVELOPMENT SERVICES

1900 SW Fourth Avenue, Suite 5000 • Portland, Oregon 97201 • www.portlandonline.com/bds • Fax 503-823-7425

Facility Permit Plan Intake Form

FOR INTAKE, STAFF USE ONLY

Date Received 5/22/13

Building Registration #

Fixed Bid

Bin # B1

Building Permit # 13-158902-FA

Mechanical #

Plumbing Permit #

Electrical Permit #

Building/Mechanical Joe 1

Electrical Dave

Plumbing

Fire Jerry 3

Planning

BES

PDOT

Structural Eric 2

Other

APPLICANT: Complete all sections below that apply to the project. Please print legibly.

Print Name Trent Inglesby Sign Name Trent Inglesby

Street Address 18008 NE Airport Way

City Portland State OR Zip Code 97230

Day Phone 503 465-9200 FAX 503 465-0677 email trenti@nwhs.com

Plans / permits available for pick up at 1900 SW 4th Avenue, 2nd floor between 8:00 am to 5:00 pm

Contact Name for plan/permit pick up Trent Inglesby

Day Phone 503 465-9200 email trenti@nwhs.com

Project Building Name / # Leatherman Tool

Project Address or Location 5224 NE 152nd Place, Portland 97230

Project Name and Description Install pallet racking in warehouse.

Total Project Value $100k Project Reference #/Billing ID # 03-POR-00701-5224

Building Contractor Northwest Handling Systems CCB # 65422

MechanicalContractor CCB #

Electrical Contractor CCB# License #

Plumbing Contractor CCB# License #

☒ **Building Permit**

No. of Stories 1

Const. Type

[Y] [N] Alarms Required

[Y] [N] Smoke Det. Req'd

[Y] [N] Sprinklers Req'd

[Y] [N] Struct. Eng / Calcs Submitted

☐ **Electrical Permit**

Please provide a completed standard electrical permit application form. You may mail or deliver it to 1900 SW 4th Avenue, Portland, Oregon 97201 or FAX to 503-823-7425.

☐ **Mechanical Permit**

Mechanical Valuation

Description

☐ **Plumbing Permit**

Number of Fixtures

Back Flow Devices

Water Service (# of Feet)

Medical Gas

Other

City of Portland
REVIEWED FOR CODE COMPLIANCE
JUN 03 2013
13-158902-FA
Permit Number

13-158902-FA

B1

Fire and Life Safety Checksheet Response

Permit #: **13-158902-000-00-FA** **Date:** June 3, 2013

Customer name and phone number: Trent Inglesby, NWHS (503) 465-9200

Note: *Please number each change in the '#' column. Use as many lines as necessary to describe your changes. Indicate which reviewer's checksheet you are responding to and the item your change addresses. If the item is not in response to a checksheet, write* **customer** *in the last column.*

#	Description of changes, revisions, additions, etc.	Checksheet and item #
1	No new fire sprinkler system installed. Existing ESFR	1
	system in warehouse installed by Patriot Fire in 1998.	
2	Class I commodities	2
3	Warehouse ~ 59k SF; Storage area ~ 19k SF	3
4	Cardboard packaging	4
5	30' ceilings	5
6	ESFR sprinkler system, 26' max height (new racking	6
	is 16' tall)	
7	See attached building drawing from Security	7
	Capital Industrial Trust sheet A1, A2	
8	See attached egress drawing	8
9	Aisle widths: 7'-6" typ. in west racking and	9
	9'-0" or greater in east racking	
10	See attached signed high-pile storage form and	10
	email from building owner	
11	See attached signed well field form	11

(for office use only)