WALSH Construction Co /OR

Micro

SUBMITTAL TRANSMITTAL

No 111117

TO Mahlum Architects (Portland)
1231 NW Hoyt, Suite 102
Portland OR 97209

DATE 02/13/12

JOB 111117

ATTN Joren Bass

RE Mechanical Seismic Submittal

PROJECT Lewis & Clark New Residential Housing
0615 SW Palatine Hill Road
Portland OR 97219

WE ARE SENDING:	SUBMITTED FOR:	ACTION TAKEN:
[X] Shop Drawings	[X] Approval	[ ] Approved as Submitted
[ ] Letter	[ ] Your Use	[ ] Approved as Noted
[ ] Prints	[ ] As Requested	[ ] Returned After Loan
[ ] Change Order	[ ] Review and Comment	[ ] Resubmit
[X] Plans		[ ] Submit
[ ] Samples	SENT VIA:	[ ] Returned
[ ] Specifications	[✓] Attached (via email)	[ ] Returned for Corrections
[ ] Other	[ ] Separate Cover Via	[ ] Due Date
		[ ] Other

Item	Package	Code	Rev	Copies	Date	Description	Status

1 - Calcs for all Mechanical Equipment to be installed by General Sheet Metal

City of Portland
REVIEWED FOR CODE COMPLIANCE
JUN 05 2012
11-102847 DFS03 CO
Permit Number

11-102847 DFS03 CO

NOTES Project Lewis & Clark New Residence Hall

Submittal Package# 23 00 00
Submittal ID# 23 00 00 DFS - 03
Date Submitted 02/13/12
Spec Section 23 00 00 - 01
Sub/Supplier General Sheet Metal

CC

The review by Walsh Construction Co /OR ("Walsh") of the above Submittal is subject to the Contract Documents and shall not relieve the Subcontractor/Supplier from any of its obligations under the agreement with Walsh nor give rise to any claim in favor of Subcontractor/Supplier or third parties against Walsh or Owner

By _____
Walsh Construction Co /OR

Signed _____
Pete Bruns
2905 SW First Ave
Portland OR 97201

INTERNATIONAL SEISMIC APPLICATION TECHNOLOGY

Submittal Documents

SUSPENDED & GROUND MOUNTED EQUIPMENT SEISMIC ANCHORAGE DESIGN

RECEIVED
MAY 22 2012
BDS
DOCUMENT SERVICES

Project

LEWIS & CLARK COLLEGE - NEW RESIDENCE HALL

☒ No Exception Taken ☐ Revise and Resubmit
☐ Exceptions Noted ☐ Rejected Resubmit
Do Not Resubmit

This review is only for general conformance with the structural design concept of the project and general compliance with the information pertaining to structural elements and systems specified in the Contract Documents Comments made on the shop drawings during this review do not relieve contractor from compliance with the requirements of the Contract Documents Review of a specific item shall not be construed as review of an assembly of which the item is a component Contractor is responsible for dimensions to be confirmed and coordinated at the jobsite Information that pertains solely to the fabrication processes or to the means methods techniques sequences and procedures of construction coordination of his or her work with that of all other trades and performing all work in a safe and satisfactory manner

Miyamoto International, Inc
Structural & Earthquake Engineers
By JR Date 2-21-2012

Location

PORTLAND, OREGON

REGISTERED PROFESSIONAL ENGINEER
84127 PE
OREGON
MAY 11, 2010
GERRIT WAYNE WILSON
EXPIRES: 06/30/12

Contractor

GENERAL SHEET METAL WORKS

City of Portland
REVIEWED FOR CODE COMPLIANCE
JUN 05 2012
Permit Number

2/10/2012

Prepared by

INTERNATIONAL SEISMIC APPLICATION TECHNOLOGY (ISAT)
5070 NW 235th Avenue, Suite 101, Hillsboro, OR 97124

INTERNATIONAL SEISMIC
APPLICATION TECHNOLOGY

5070 NW 235th Ave Suites #101
Hillsboro, OR 97124

SUSPENDED & GROUND MOUNTED EQUIPMENT
SEISMIC ANCHORAGE DESIGN

Project

LEWIS & CLARK COLLEGE - NEW RESIDENCE HALL

Location

PORTLAND, OREGON

Contractor

GENERAL SHEET METAL WORKS

Table of Contents

Description	Pages
BASIS FOR DESIGN	
SUSPENDED EQUIPMENT CALCULATIONS & DETAILS	0 1 - H1
GROUND MOUNTED EQUIPMENT DETAILS	SK1 - SK4
GROUND MOUNTED EQUIPMENT CALCULATIONS	1 - 9
APPENDIX	

City of Portland
BUILDING CODE
COMPLIANCE
JUN 05 2012
Permit Number

INTERNATIONAL SEISMIC
APPLICATION TECHNOLOGY

5070 NW 235th Ave Suites #101
Hillsboro, OR 97124

SUSPENDED & GROUND MOUNTED EQUIPMENT
SEISMIC ANCHORAGE DESIGN

Project

LEWIS & CLARK COLLEGE - NEW RESIDENCE HALL

Location

PORTLAND, OREGON

Contractor

GENERAL SHEET METAL WORKS

Basis for Design

BUILDING CODE

2009 EDITION OF THE INTERNATIONAL BUILDING CODE INCLUDING PROVISIONS OF THE 2010 EDITION OF THE OREGON STRUCTURAL SPECIALTY CODE SUPPLEMENTED BY THE ASCE 7-05

EQUIPMENT LOADS

MAU-1-1	284 LBS
HRU-6-1	2,879 LBS
GF-6-1	234 LBS

MATERIAL SPECIFICATIONS

PLATE, ANGLE, MISC SHAPES ASTM A36 (Fy = 36,000 PSI)

28-DAY COMPRESSIVE STRENGTH OF CONCRETE ASSUMED TO BE 3,000 PSI

SHEET METAL SCREWS SHALL CONFORM TO ICC REPORT ESR-2196

SCOPE OF WORK

THE SUPPORTING STRUCTURE IS BEYOND THE SCOPE OF THIS SUBMITTAL IT IS THE RESPONSIBILITY OF THE CONTRACTOR TO SUBMIT THESE CALCULATIONS AND ASSOCIATED DOCUMENTS TO THE ENGINEER OF RECORD TO ANALYZE THE ABILITY OF THE SUPPORTING STRUCTURE TO ACCOMMODATE THE REACTIONS FROM THE CONNECTIONS SPECIFIED IN THIS SUBMITTAL EQUIPMENT DIMENSIONS USED IN CALCULATIONS ARE BASED ON EQUIPMENT DATA SHEETS ATTACHED EQUIPMENT WITH NO POWER RATING LISTED ASSUMED TO BE LESS THAN 10 HP THIS SET OF CALCULATIONS IS BASED ON THE LOADS AND ASSUMPTIONS STATED WITHIN THIS SUBMITTAL IF THE LOADS AND ASSUMPTIONS ARE NOT CORRECT THIS SUBMITTAL SHALL BE REVISED

City of Portland
REVIEW
COMPLETE
JUN 05 2012
Permit Number

INTERNATIONAL SEISMIC
APPLICATION TECHNOLOGY

Suspended Equipment Calculations & Details

City of Portland
REVIEWED FOR CODE COMPLIANCE
JUN 05 2012
Permit Number

INTERNATIONAL SEISMIC APPLICATION TECHNOLOGY
Engineered Seismic Bracing Of Suspended Utilities
Volume 1 - Distributed Electrical Systems & Equipment

INTRODUCTION

The International Seismic Application Technology *Applications, Design and Inspection Manual* is a two volume series which provides guidelines for the design and installation of engineered seismic restraint systems for suspended utilities ISAT is a global provider of engineering services, consulting services and restraint system components for nonstructural seismic bracing Specializing in the healthcare, industrial and commercial construction markets, our focus is providing code compliant solutions that are both cost effective and construction friendly

In keeping with our commitment to the engineering community and the construction industry, ISAT continually adapts its product line and installation details to improve system performance and field installation efficiency ISAT's family of nonstructural seismic brackets incorporate unique Rod Capture [1] technology, a labor saving innovation which eases installation and reduces hardware cost

ISAT engineered systems are based on extensive field experience in the seismic bracing of suspended utility systems Design professionals and contractors deriving the most benefit from ISAT designs will be those involved with new or remedial construction associated with the Mechanical, Electrical and Plumbing (MEP) trades

This is Volume 1 The relevant utility components encompassed within each of the two *Manual* volumes is as follows

Volume 1 – Distributed Electrical Systems & Equipment

- Electrical Conduit
- Cable Trays
- Bus Duct and Busway
- Suspended Electrical Equipment and Light Fixtures
- Terminal Boxes & Pull Cans

[1] Patent Number 6,050,035

City of Portland
REVIEWED FOR CODE COMPLIANCE
JUN 05 2012
Permit Number

International Seismic Application Technology
14848 Northam Street, La Mirada, CA 90638
877-999-4728 (Toll Free) 714-523-0845 (fax)
www isatsb com

Model Law Structural Engineer
NCEES No 20675

INTRODUCTION - CONTINUED

Volume 2 - Mechanical Piping, HVAC Duct, Plumbing, Process Piping and Equipment

- Mechanical Piping
- HVAC Duct and In-Line Equipment
- Plumbing and Process Piping
- Suspended Mechanical Equipment
- Vibration Isolated Systems
- Suspended Air Filtration Systems

Whether performing work within an essential facility or for general commercial, institutional or industrial construction, the user will find that ISAT's engineered installation details encompass a range of efficient, cost effective seismic bracing options with specific attention to ease of installation – a problem common to many projects on which seismic bracing is required

ISAT Bracing details provide the option of utilizing several forms of seismic restraint brace arm elements including

12 gauge channel tube steel cable hanging wire

GENERAL CODE COMPLIANCE

ISAT installation details and engineered bracing tables are suitable for use under the following codes and requirements

- 2006 International Building Code
- ASCE 7-05, Minimum Design Loads For Buildings and Other Structures
- FEMA 450-03, NEHRP Recommended Provisions for Seismic Regulations for New Buildings and Other Structures
- FEMA 412, FEMA 413, FEMA 414, Installing Seismic Restraints For Non-Structural Components
- TI-809-04 Seismic Design For Buildings, US Army Corp of Engineers
- Department of Defense, Unified Facilities Criteria 3-310-04 (6/07) Seismic Design For Buildings
- NFPA 5000, Building Construction and Safety Code
- American Concrete Institute (ACI) 318-05, Appendix D

City of Portland
REVIEWED FOR CODE COMPLIANCE
JUN 05 2012
Permit Number

ISAT
International Seismic Application Technology
14848 Northam Street, La Mirada, CA 90638
877-999-4728 (Toll Free) 714-523-0845 (fax)
www isatsb com

W V Jaugen
Model Law Structural Engineer
NCEES No 20675

INTRODUCTION – CONTINUED

Exemptions from the seismic design of nonstructural components are defined by ASCE 7-05, Sections 13 1 4 and 13 6 Additional exclusions may be allowed by the local Authorities Having Jurisdiction (AHJ) If so, written confirmation listing the additional exemptions is required from the AHJ or the Engineer of Record prior to the submittal of ISAT seismic restraint layout drawings When the *Manual* is used for projects constructed under other codes, users are advised to confirm the allowed exclusions

SEISMIC FORCE FORMULAS

The *ISAT Applications, Design and Inspection Manual* provides seismic restraint requirements engineered for use within a broad range of horizontal accelerations Information required at the beginning of the process includes project type, location, seismic force variables (below), and the seismic design specifications or performance criteria Once these parameters have been determined and certain basic calculations have been performed, ISAT's Engineered Bracing Tables and Detail Drawings are used to define the seismic bracing requirements for the suspended utilities

ASCE 7-05, Section 13 1 1 requires design of the seismic restraints for nonstructural components The resultant construction documents are to be prepared by a registered design professional

Seismic Design Force for the component, Fp, is calculated per ASCE 7-05 Equations 13 3-1 thru 13 3-3 In order to perform these calculations it is first necessary that the project specific S_{DS} value, defined below, be provided by the Engineer of Record or the Project Architect The S_{DS} value should commonly be identified on the structural plans or within the construction documents

SEISMIC FORCE VARIABLES

Spectral Response Acceleration at Short Periods, S_{DS}
Component Amplification Factor, a_p
Component Response Modification Factor, R_p
Component Importance Factor, I_p

City of Portland
REVIEWED FOR CODE COMPLIANCE
JUN 0 5 2012
Permit Number

ISAT
International Seismic Application Technology
14848 Northam Street, La Mirada, CA 90638
877-999-4728 (Toll Free) 714-523-0845 (fax)
www isatsb com

W V Jaugen
Model Law Structural Engineer
NCEES No 20675

INTRODUCTION – CONTINUED

Component Operating Weight, W_p
Height in Structure, Point of Component Attachment, z
Average Roof Height With Respect To Base, h

Component Importance Factor, I_p, is to be 1 5 for components required for life safety applications after an earthquake, components that contain hazardous materials, and components needed for continued operation of Occupancy Category IV facilities Design professionals involved in these facilities need to provide ISAT with a list of utility services requiring an I_p greater than 1 0

The ISAT Project Worksheet located at the back of the *Manual* is provided as a vehicle for gathering the required information To obtain assistance in performing calculations, complete the Worksheet and transmit it to ISAT Technical Service The resultant F_p values will then be calculated by ISAT and returned in conjunction with project specific submittal documentation

To obtain project worksheets for use with other codes, please contact ISAT Technical Service

ISAT ENGINEERED BRACING TABLES

The cumulative result of applying the seismic demand formulas is the need to provide engineered seismic restraint systems covering a substantial range of possible horizontal accelerations For simplicity, the worst case horizontal acceleration can be calculated at the underside of the roof deck and then used for all floors of the structure However, to achieve economy of installation, the horizontal acceleration for each floor can be computed separately and used in conjunction with the ISAT bracing tables

In response to this need ISAT has generated concise tables of the minimum restraint requirements for a broad array of component accelerations applied to commonly used suspended utilities

Please note - The use of the ISAT Engineered Bracing Tables is only applicable in conjunction with the use of ISAT's family of seismic restraint hardware No Substitutions Allowed

For additional information contact ISAT Technical Service toll free at 877-999-4728 or visit our web site at www.ISATSB.com.

City of Portland
BUREAU OF DEVELOPMENT SERVICES
JUN 05 2012
Permit Number

International Seismic Application Technology
14848 Northam Street, La Mirada, CA 90638
877-999-4728 (Toll Free) 714-523-0845 (fax)
www isatsb com

Model Law Structural Engineer
NCEES No 20675

INTRODUCTION - CONTINUED

SPECIAL INSPECTION

Per Sections 1704 thru 1707 of the 2006 IBC, Special Inspection is required of certain mechanical, electrical and plumbing systems within facilities assigned to Seismic Design Categories C, D, E or F The registered design professional in responsible charge may utilize ISAT documentation as the basis for submitting a "special inspection plan" for these items as required by Code Section 1705 Please contact ISAT Technical Service for assistance

Along with the need for special inspection of specific components as referenced above, contractor's are required by 2006 IBC, Section 1706 to submit "a written statement of responsibility" prior to installation of the system or components Please contact ISAT Technical Service for assistance in meeting this requirement

A definition of what systems and components require special inspection per the Code is provided within the *Manual* under the Application Notes section specific to each trade

BLAST PROTECTION AND OPERATIONAL RESILIANCY

In addition to seismic restraints, ISAT furnishes hardware and engineering services for restraint systems whose use is intended to enhance the resiliancy of utility systems within critical facilities where it has been deemed necessary to mitigate against the potential of a bomb blast For more information on this topic please contact ISAT.

Allan R LaRoche,
Vice President - Engineering

William V Joerger,
Principal Structural Engineer

Shannon Rose,
Director - Engineering Services

City of Portland
REVIEWED FOR CODE COMPLIANCE
JUN 05 2012
Permit Number

ISAT
International Seismic Application Technology
14848 Northam Street, La Mirada, CA 90638
877-999-4728 (Toll Free) 714-523-0845 (fax)
www isatsb com

Model Law Structural Engineer
NCEES No 20675

DESIGN CONSIDERATIONS

1 Information within the ISAT *Manual* is intended only as a guideline for the design of seismic restraint systems It is not intended as the basis for the design of the suspended utility nor is it intended to be all inclusive of every element of the suspended utility Certain elements of systems such as trapeze assemblies, support frames for suspended mechanical equipment or pipe anchors and guides for steam lines may require additional design, analysis and detailing by a Registered Design Professional

2 Seismic restraint layout drawings prepared by persons familiar with and experienced in the design and layout of support and seismic bracing systems may be required in order to offer a more complete design package to the installing contractor

3 Any deviation from the ISAT Bracing Tables or ISAT Installation Details shall only be made using sound design practices by a qualified engineer with the approval of the Engineer of Record and the code Authority Having Jurisdiction, subject to local code requirements

4 It is the responsibility of the Engineer of Record for the building to confirm suitability of the structure to accept the vertical support loads and seismic reactions generated as a result of these designs

5 All ISAT brace assemblies employ proprietary ISAT seismic brackets, third party tested and witnessed by a licensed California structural engineer. No deviations or substitutions allowed without the express written consent of ISAT Any unauthorized deviation or substitution voids all engineering

6 Use of ISAT's elemental engineering data for the generation of custom engineered bracing solutions is solely the responsibility of the designer Consultation with ISAT is advised ISAT design values are subject to change without notice

7 Where specification or job requirements deviate from those shown in the ISAT *Manual*, the more stringent requirement shall prevail

8 ISAT materials and design work are produced with a degree of care and skill ordinarily exercised by other reputable members of our profession No other warranty, expressed or implied, is made

City of Portland
REVIEWED FOR CODE COMPLIANCE
JUN 05 2012
Permit Number

International Seismic Application Technology
14848 Northam Street, La Mirada, CA 90638
877-999-4728 (Toll Free) 714-523-0845 (fax)
www isatsb com

Model Law Structural Engineer
NCEES No 20675

DESIGN CONSIDERATIONS – CONTINUED

9 Where design of nonstructural components or their supports is required by ASCE 7-05, Chapter 13, such design shall be shown in the construction documents prepared by a registered design professional for use by the owner, building officials, contractors and inspectors

10 The installation of seismic restraints for nonstructural components may require the engineer in responsible charge to prepare a statement of special inspection for submittal by the permit applicant and the installation may be subject to special inspection See ISAT Page 11 1, "Special Inspection and Quality Assurance"

City of Portland
REVIEWED FOR CODE COMPLIANCE
JUN 05 2012
Permit Number

ISAT
International Seismic Application Technology
14848 Northam Street, La Mirada, CA 90638
877-999-4728 (Toll Free) 714-523-0845 (fax)
www isatsb com

Model Law Structural Engineer
NCEES No 20675

GENERAL APPLICATION NOTES

1 ISAT Application Notes, Engineered Bracing Tables and Detail Drawings comply with the requirements of a spectrum of codes, standards and guidelines including but not limited to the 2006 International Building Code and ASCE 7-05. Other recommended provisions and research documents such as FEMA 302, FEMA 368, FEMA 450, Army Corp of Engineers TI-809-04, Department of Defense UFC 3-310-04(6/07) and NFPA 5000 are used as references and supporting documents.

2 "Every structure, and portion thereof, including nonstructural components that are permanently attached to structures and their supports and attachments, shall be designed and constructed to resist the effects of earthquake motions in accordance with ASCE 7 . " per IBC Section 1631.1.

3 Project seismic design parameters shall be defined on the plans or within the construction documents by the Engineer of Record in accordance with IBC Section 1603.1 5. Specific earthquake data used for nonstructural seismic bracing design (and required by IBC, Section 1603 1 5) includes the mapped Spectral Response Accelerations, S_S and S_1, Site Class; Spectral Response Coefficients, S_{DS} and S_{D1}, Seismic Design Category.

4. Information within the ISAT Manual is intended only as a guideline for the design of seismic restraint systems. It is not intended as the basis for the design of the suspended utility nor is it intended to be all inclusive of every element of the suspended utility. Certain elements of systems such as trapeze assemblies, support frames for suspended equipment may require additional design, analysis and detailing by a Registered Structural Engineer. Contact ISAT Technical Service for assistance

5. All seismic bracing assemblies shall utilize ISAT supplied, proprietary, Rod Capture seismic brackets unless noted otherwise. No Substitutions Allowed

6. Every run which requires bracing shall have a minimum of two Transverse Braces locations and one Longitudinal Brace location

7 For the purpose of these guidelines a "run" is defined as a suspended, distributed utility having a minimum of 10 foot straight run length

8 If a change in run direction results in an offset in the run, the offset may not be required to be braced Refer to specific guidelines per the "A" series pages

City of Portland
REVIEW AND ACCEPTANCE COMPLIANCE
JUN 05 2012
Permit Number

ISAT
International Seismic Application Technology
14848 Northam Street, La Mirada, CA 90638
877-999-4728 (Toll Free) 714-523-0845 (fax)
www isatsb com

W V Jaugen
Model Law Structural Engineer
NCEES No 20675

GENERAL APPLICATION NOTES - CONTINUED

9 Solid strut provides higher design capacities than punched or slotted and may allow for greater brace spacing The ISAT Bracing Tables, therefore, are based on the use of solid strut for rigid seismic restraint brace arm construction unless noted otherwise Refer to page E1 for brace arm lengths and capacities. Punched or short slot channel may be used provided the reduced design values on Page E1 are accounted for.

10 For trapeze construction, strut may be solid, punched with holes or short slots Trapeze beam elements and maximum uniform loads are shown on Page G2

11. Solid, punched or short slot strut may be used for rod stiffening, refer to page G1.

12 Strut with 3" long slot or large diameter knockouts are not to be used

13 Where brace elements are through-bolted, the mounting hole in the element is to be no more than 1/16" in diameter larger than the bolt or threaded rod

14 A Longitudinal Brace at a 90 degree change in direction may act as a Transverse Brace if it is located within the set back distances per the "A" series pages The brace arm and anchorage must be sized to meet or exceed the requirements of the tabulated Transverse Brace loads.

15 A Transverse Brace may act as a Longitudinal Brace if it is located within the set back distances from the change in direction as shown within the "A" series pages The brace arm and anchorage must be sized to meet or exceed the requirements of the tabulated Longitudinal Brace loads

16 Avoid bracing to structural elements which may respond differently in a seismic event

17 The Engineer of Record for the building shall review the ISAT attachment details and loads to determine the suitability of the structure to accept such loads prior to installation of the seismic bracing system

18 When utilizing cable bracing for other than vibration isolated systems, tension the cable to remove slack without inducing uplift of the suspended element Cable installation is to be symmetrical.

19 As a general rule, do not mix rigid bracing and cable bracing in the same run. However, once bracing has made a 90 degree change in run direction, the bracing type may switch from rigid to cable or vice versa

City of Portland
REVIEWED FOR CODE COMPLIANCE
JUN 05 2012
Permit Number

ISAT
International Seismic Application Technology
14848 Northam Street, La Mirada, CA 90638
877-999-4728 (Toll Free) 714-523-0845 (fax)
www isatsb com

Model Law Structural Engineer
NCEES No 20675

GENERAL APPLICATION NOTES - CONTINUED

20 Bracing tables included in this *Manual* are based on a nominal brace angle of 45 degrees from horizontal +/- 2.5 degrees. Brace angles less than 45 degrees are acceptable without modification Brace angles greater than 47.5 degrees and less than 60 degrees from horizontal are acceptable, however, the Tabulated Brace Spacing and anchorage loads will require modification by ISAT Technical Support

21 Bracing may be installed with up to +/- 7-½ degrees variation from "true" Transverse or "true" Longitudinal alignment without the need for additional engineering Refer to installation details

22. Brace Reaction (P) per the Engineered Bracing Tables was calculated based on a brace arm inclination of 45 degrees To determine the horizontal or vertical component, divide Brace Reaction by 1 414 For purposes of this *Manual*, "point load" equals Brace Reaction divided by 1 414 Where other brace angles are used, the vertical and horizontal force components may be calculated using the principles of statics

23 Minimum Rod Diameter sizes for seismic brace locations are shown within the ISAT "C" Series Engineered Bracing Tables For locations utilizing cable brace arms, the rod size is based on dead load plus a vertical seismic acceleration force equal to 0 2 S_{DS} W_P in accordance with ASCE 7-05, Sections 12.4 2 2 and 13.3.1. Where rigid brace arms are to be utilized the vertical component of the seismic brace reaction has also been added to the rod load. Rod strength values are listed within the "H" series pages

24. Compare ISAT minimum rod diameters to the local trade specific requirements and to the project specifications Use the largest required rod diameter.

25. Un-braced suspended utilities are to have a 6" minimum clearance to ceiling support wires.

26. Bolt connection strength and strut-nut slippage design values are based on the Manufacturer's recommended bolt torque If these are not given use the values listed below:

3/8" Diameter Bolt	19 ft-lbs
1/2" Diameter Bolt	50 ft-lbs
5/8" Diameter Bolt	100 ft-lbs

For RC-1 and RC-2 Rod Stiffener tightening requirements, refer to Page G1

City of Portland
REVIEWED FOR CODE COMPLIANCE
JUN 05 2012
Permit Number

ISAT
International Seismic Application Technology
14848 Northam Street, La Mirada, CA 90638
877-999-4728 (Toll Free) 714-523-0845 (fax)
www isatsb com

Model Law Structural Engineer
NCEES No 20675

GENERAL APPLICATION NOTES - CONTINUED

27. Post installed anchor strength values used for attachment of seismic bracing to concrete decks are based on combined tension and shear in accordance with the recommendations of the Manufacturer's data given in the ICC evaluation report for the anchor Refer to anchor installation pages for anchor torque, minimum anchor spacing and edge distance requirements

28 Post installed mechanical expansion anchor embedment shown on ISAT details is to be measured before the anchor setting torque is applied. The observed anchor projection after the proper torque is applied may increase by a maximum of one bolt diameter.

29 Seismic bracing may not pass through a structural seismic separation joint Utility systems that pass through a seismic separation joint must be seismically restrained within 5 feet of both sides of the separation or within 5 feet of point of connection of any hardware designed to accommodate seismic movement across the span of the separation joint

30 With the approval of the Engineer of Record, utility systems within a basement that are suspended from the overhead deck may be braced to load bearing basement walls provided that the walls and the overhead deck will respond similarly during a seismic event.

31 A brace arm for a smaller distributed utility is not to be utilized as a transverse or longitudinal brace for an adjoining run of a larger distributed utility.

32. The ISAT component design and published loads to the structure are working loads. Maximum anchorage design loads are working loads based on combined tension and shear Anchor ultimate strength values have been converted to working loads in accordance with the anchor Manufacturer's ICC Report.

33. For ISAT seismic restraint components, refer to Section F. For all general components refer to Section H, Approved Hardware and Qualified Manufacturers.

34. Where the Code allows seismic restraints to be omitted from a component, provisions shall be made to avoid seismic impact with other components or impact with elements of the building structure Impact risk analysis of non-braced components to be by others.

35 For anchorage designs presented in this Manual, light weight concrete is to be sand light weight concrete

City of Portland
REVIEW
COMPLIANCE
JUN 05 2012
Permit Number

ISAT
International Seismic Application Technology
14848 Northam Street, La Mirada, CA 90638
877-999-4728 (Toll Free) 714-523-0845 (fax)
www isatsb com

W V Jaugn
Model Law Structural Engineer
NCEES No 20675

GENERAL APPLICATION NOTES - CONTINUED

36 In developing the ISAT Bracing Tables, the pipe stress limitations of ASCE 7-05, Section 13.6.11 2 where determined and accounted for when engineering the Maximum Allowable Transverse Brace Spacing.

37. Brace locations may be field relocated to an alternate support location within the same utility run when the length of the utility tributary to the brace does not exceed the brace spacing tabulated in the C-Series Bracing Tables Anchorage and support rod details are to be taken from the Bracing Tables

City of Portland
REVIEWED FOR CODE COMPLIANCE
JUN 05 2012
Permit Number

ISAT
International Seismic Application Technology
14848 Northam Street, La Mirada, CA 90638
877-999-4728 (Toll Free) 714-523-0845 (fax)
www isatsb com

W V Jaugn
Model Law Structural Engineer
NCEES No 20675

SEISMIC BRACING NOTES

HVAC DUCT AND MECHANICAL EQUIPMENT

1 In compliance with the 2006 IBC, seismic bracing is to be installed on all suspended HVAC duct runs and mechanical equipment per ISAT's engineered bracing tables, ISAT's installation details and the following criteria.

BRACING REQUIREMENTS FOR SUSPENDED HVAC DUCT AND MECHANICAL EQUIPMENT		
Seismic Design Category	**I_P**	**Service Bracing Requirements**
A and B	All	No Bracing Required
C	1.0	No Bracing Required
D, E, F	1.0	Brace Duct Having A Cross-Sectional Area 6 Ft^2 Or Greater
C, D, E, F	>1 0	Subject To Pre-Approval Of The AHJ, Bracing My Be Omitted From Ducts Less Than 6 Ft^2 In Cross Sectional Area Otherwise Brace All Duct > 5 Lbs/LF

Note: I_p refers to importance factor of the component.

2 For All Seismic Design Categories, where Ip = 1.0, seismic restraints are not required for duct supported by rod hangers if the following conditions are met for the full length of the run

a) The rod hangers are 12" or less in length from the top of the duct or component to the bottom of the structural support for the hanger and the rod hangers are detailed to avoid significant bending of the hangers and their attachments.

b) The omission of seismic restraints will not result in damaging impact with other systems or components

3 Where bracing is allowed to be omitted, flexible connections are required between any fixed juncture, equipment or component and the connecting HVAC duct

4 For Seismic Design Category D, E or F where component I_p > 1 0. Brace all suspended equipment.

City of Portland
REVIEWED FOR CODE COMPLIANCE
JUN 0 5 2012
Permit Number

ISAT
International Seismic Application Technology
14848 Northam Street, La Mirada, CA 90638
877-999-4728 (Toll Free) 714-523-0845 (fax)
www isatsb com

W V Jaugen
Model Law Structural Engineer
NCEES No 20675

SEISMIC BRACING NOTES

HVAC DUCT AND MECHANICAL EQUIPMENT (CONT'D)

5 For Seismic Design Categories D, E or F where Ip = 1 0

a) No bracing is required for floor supported equipment weighing less than 400 lbs and with legs less than 4 feet in height where the equipment is attached via flexible connections between itself and associated utilities (conduit, piping, etc)

b) Bracing may be excluded from suspended equipment weighing ≤ 20 lbs. that has flexible connections between the equipment and associated utilities

c) Where in-line equipment weight is > 20 lbs and ≤ 75 lbs, the equipment is hard connected in-line to the duct and the duct itself is braced, independent bracing of the equipment is not required

d) Independently brace all in-line equipment greater than 75 lbs.

6 All trapeze assemblies supporting ducts shall be braced considering the total weight of the duct(s) and insulation on the trapeze If the actual weight of the duct is unknown, refer to Duct Weight Charts, Section X.

7. Un-braced piping attached to in-line equipment shall be provided with flexible connections

8. Special Inspection Requirements:

Per Section 1707 of the 2006 IBC, special inspection for HVAC ductwork and mechanical equipment is required as follows:

a) Periodic special inspection during anchorage installation and seismic restraint installation as required for all HVAC duct systems under Note 1 (above) where the component Ip > 1.0.

b) Periodic special inspection is required during the installation of HVAC ductwork that will contain hazardous materials in structures assigned to seismic Design Category C, D, E or F.

City of Portland
REVIEWED FOR CODE COMPLIANCE
JUN 0 5 2012
Permit Number

ISAT
International Seismic Application Technology
14848 Northam Street, La Mirada, CA 90638
877-999-4728 (Toll Free) 714-523-0845 (fax)
www isatsb com

W V Jaugn
Model Law Structural Engineer
NCEES No. 20675

SEISMIC BRACING NOTES

HVAC DUCT AND MECHANICAL EQUIPMENT (CONT'D)

c) Periodic special inspection is required during the installation of vibration isolation systems in structures assigned to seismic Design Category C, D, E or F where the construction documents require a nominal clearance of 0 25 inches or less between the equipment support frame and restraint

9 Plastic or fiberglass ductwork shall be braced at one-half the spacing identified in the ISAT bracing charts for the equivalent weight metal duct

10 Brace spacing shall not exceed ISAT's maximum allowable 40 foot transverse and 80 foot longitudinal limitations for HVAC Duct.

11. All seismic bracing assemblies shall utilize ISAT supplied, proprietary Rod Capture seismic brackets and other ISAT manufactured hardware unless noted otherwise NO SUBSTITUTIONS ALLOWED Use of any substitute bracket voids all engineering

12 Every HVAC Duct run which requires bracing shall have a minimum of two Transverse Braces and one Longitudinal Brace For the purposes of this *Manual*, a run is defined as a suspended element of 10 foot minimum straight length

13. A Transverse Brace shall be installed on one side of a horizontal 90 degree change in duct direction

14 A Longitudinal Brace may act as a Transverse Brace if it is located within two duct widths of a 90 degree change in direction and it is installed on the larger of the two ducts

15 A Transverse Brace may act as a Longitudinal Brace if it is located within two duct widths of a 90 degree change in direction, if the brace arm has been sized to meet or exceed the requirements of the Longitudinal Brace and the Transverse Brace is installed on the larger of the two ducts.

16. A transverse brace for a smaller duct is not to be utilized as the longitudinal brace for an adjoining run of larger duct.

City of Portland
REVIEW [illegible]
JUN 05 2012
Permit Number

ISAT
International Seismic Application Technology
14848 Northam Street, La Mirada, CA 90638
877-999-4728 (Toll Free) 714-523-0845 (fax)
www isatsb com

W V Jaugen
Model Law Structural Engineer
NCEES No 20675

SEISMIC BRACING NOTES

HVAC DUCT AND MECHANICAL EQUIPMENT (CONT'D)

17 Where a duct passes through a wall may be considered a Transverse Brace location provided the duct is tightly constrained and it is a rigid connection The ability of a breakaway smoke damper to act as a transverse brace location is to be evaluated on a case-by-case basis The Engineer of Record or the Project Architect must verify the ability of the wall to accommodate the transverse seismic load

Flexible connections at walls are not allowed as Transverse Brace locations

18. Vertical support spacing for trapeze mounted duct is to be the lesser of 10 foot maximum, or the maximum as dictated by the International Mechanical Code, as listed in the project specifications, or as allowed by the local code authority.

19. Each layer of a multi-layer trapeze rack shall be braced individually based on the weight of the individual layers

20. All vertical riser ducts shall include lateral restraint at the top and bottom of the riser and at each intermediate floor, not to exceed a maximum 30 foot interval

21. For buildings six stories or more in height, the lateral seismic restraint and the vertical support shall be engineered on an individual project basis.

22. Vertical duct runs which are mechanically attached to floors at point of penetration are considered a transverse and longitudinal brace location when the anchorages and the duct framing are sized to accommodate the lateral load

23 When used to construct a rigid brace arm assembly, minimum 12 gauge steel channel shall be solid Punched or short slot channel may be used provided the reduced Brace Arm design values on Page E1 are accounted for

City of Portland
REVIEWED FOR CODE COMPLIANCE
JUN 05 2012
Permit Number

ISAT
International Seismic Application Technology
14848 Northam Street, La Mirada, CA 90638
877-999-4728 (Toll Free) 714-523-0845 (fax)
www isatsb com

W V Jaugen
Model Law Structural Engineer
NCEES No 20675

SEISMIC BRACING NOTES

VIBRATION ISOLATED HVAC DUCT AND MECHANICAL EQUIPMENT

1. ISAT includes requirements for the seismic restraint of vibration isolated duct and equipment suspended from spring hangers However, design of the vibration isolated support system itself must be accomplished separately on a job specific basis by a qualified engineer.

2. Install vibration isolation hardware per manufacturer's instructions to achieve the required degree of isolation and/or deflection

3 Unless noted otherwise on the plans or within the project documents, spring isolated hanger supports shall be used at the first three hanger supports on the discharge and/or the inlet of duct connected to vibration isolated fans, air handling units or other equipment

4 Vibration isolated hangers that also require seismic bracing shall be braced using galvanized steel cable or minimum 12 gage hanging wire tied to ISAT designed and tested seismic brackets NO SUBSTITUTIONS. Use of any non-ISAT bracket voids all engineering

5. Cable to be installed with sufficient slack to accommodate, but not exceed, the vibration isolators calculated deflection See manufacturer's vibration isolator specifications. Do not tension cables to the extent that they support gravity loads Cable installation is to be symmetrical

City of Portland
REVIEW FOR CODE COMPLIANCE
JUN 05 2012
Permit Number

ISAT
International Seismic Application Technology
14848 Northam Street, La Mirada, CA 90638
877-999-4728 (Toll Free) 714-523-0845 (fax)
www isatsb com

W V Jaugen
Model Law Structural Engineer
NCEES No 20675

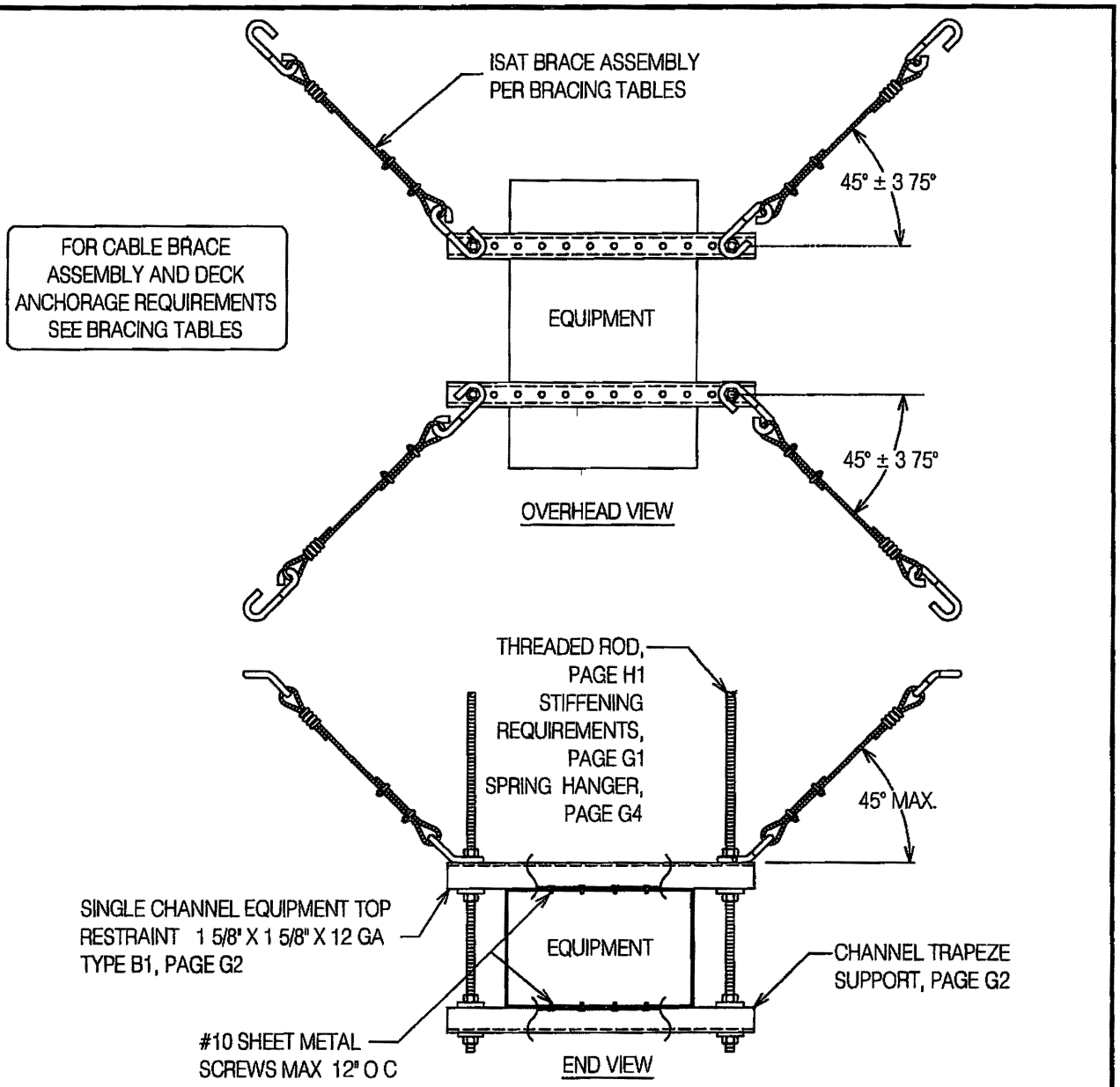

4-ROD SUSPENDED EQUIPMENT, S250R SEISMIC BRACKETS
4-WAY SPLAYED TRANSVERSE-LONGITUDINAL CABLE BRACING

ISAT

International Seismic Application Technology
14848 Northam Street, La Mirada, CA 90638
877-999-4728 (Toll Free) 714-523-0845 (fax)
www isatsb com

City of Portland
REVIEWED FOR CODE COMPLIANCE
JUN 0 5 2012
Permit Number

W V Jaugen
Model Law Structural Engineer
NCEES No 20675

Rev 1
11/01/07

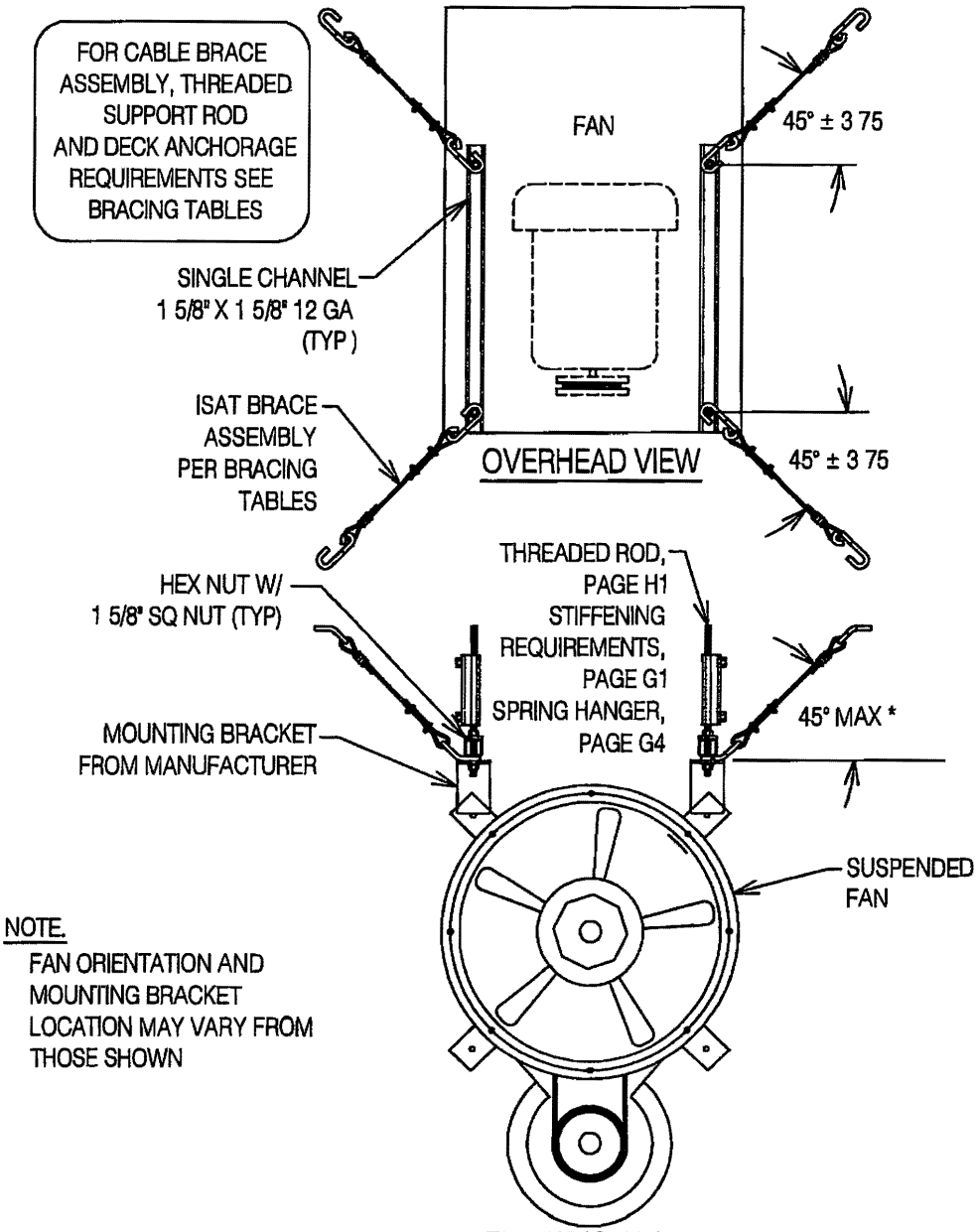

4-ROD SUSPENDED EQUIPMENT WEIGHT
4-WAY SPLAY TRANSVERSE-LONGITUDINAL CABLE FAN BRACING

ISAT
International Seismic Application Technology
14848 Northam Street, La Mirada, CA 90638
877-999-4728 (Toll Free) 714-523-0845 (fax)
www isatsb com

City of Portland
REVIEWED FOR CODE COMPLIANCE
JUN 05 2012
Permit Number

W V Jaeger
Model Law Structural Engineer
NCEES No 20675

Rev 0
11/01/07

CABLE BRACING REQUIREMENTS [7]

MECHANICAL EQUIPMENT, ROD HUNG — **MAXIMUM HORIZONTAL SEISMIC FORCE = 0 60 G's**

Requires Use of ISAT Seismic Brackets — *Use of Any Non-ISAT Bracket Voids Engineering* — *2006 International Building Code Compliant*

Equipment Maximum Operating Weight (lbs)	Rod [1] Total Vertical Load (lbs)	Min [8] Vertical Support Rod Dia (in)	4-WAY SPLAYED BRACING REQUIREMENTS: Brace [3] Reaction P (lbs)	Min Brace Assembly Page E3	Min Brace Anchorage [6]: Form Pour [4] Deck Page D1	Metal [5] Deck Page D2
2 ROD SUPPORT			4-Way Splayed Brace Pattern (B39 0, B39 3)			
25	15	3/8	15	CB1	N1	L1
50	30	3/8	30	CB1	N1	L1
75	45	3/8	45	CB1	N1	L1
100	60	3/8	60	CB1	N1	L1
265	159	3/8	159	CB1	N2	L2
300	180	3/8	180	CB1.1	N2	L2
4-ROD SUPPORT			4-Way Splayed Brace Pattern (B39 1, B39 4, B50 3)			
500	150	3/8	300	CB1 1	N3	L3
750	225	3/8	450	CB2	N5	L5
1,000	300	3/8	600	CB2	N6	L6
2 000	600	1/2	1 200	CB12	N12	L12
3 000	900	1/2	1 800	CB12	N18	L18
3,600	1,080	5/8	2,160	CB22	N22	L22
			8-WAY SPLAYED BRACING REQUIREMENTS			
6-ROD SUPPORT			8 Way Splayed Brace Pattern (B39 2)			
4 000	1,200	1/2	1,200	CB12	N12	L12
5 000	1,500	5/8	1 500	CB21	N15	L15
6,000	1 800	5/8	1,800	CB21	N18	L18
7,200	2 160	5/8	2,160	CB22	N22	L22

MAU-1-1

City of Portland
REVIEW BY CODE COMPLIANCE
JUN 05 2012
Permit Number

1 TVL = DL + Fv + (0 2S_{DS}/1 4 x Wp) All Terms Are Working Loads
2 Not Used
3 At Max 45 Degree Brace Inclination Where Brace Inclination Exceeds 47 5 Degrees Reduce Brace Spacing 50% From That Shown
4 Min 3 000 psi NWC Any "N Series" Connection May Be Utilized Having A Numeric Designation Equal To Or Higher Than That Shown
5 Min 3 000 psi NWC or LWC Any "L Series" Connection May Be Utilized Having A Numeric Designation Equal To Or Higher Than That Shown
6 As An Alternate Brace Anchorage Connections To Structure May Be Employed Using Any Detail From Structural Connections Section "D" Series Details Where Assembly Design Value Meets Or Exceeds Brace Reaction
7 For Trade Specific Bracing Installation Notes, Refer To Page 9 1
8 Vertical Support Connections May Be Selected From The 'G" Series Details Where Design Value Meets Or Exceeds Rod Total Vertical Load

ISAT
International Seismic Application Technology
14848 Northam Street, La Mirada, CA 90638
877-999-4728 (Toll Free) 714-523-0845 (Fax)
www isatsb com

W V Joseph
Model Law Structural Engineer
NCEES No 20675

© 2007, I S A T All rights reserved

Rev 0
11/01/07

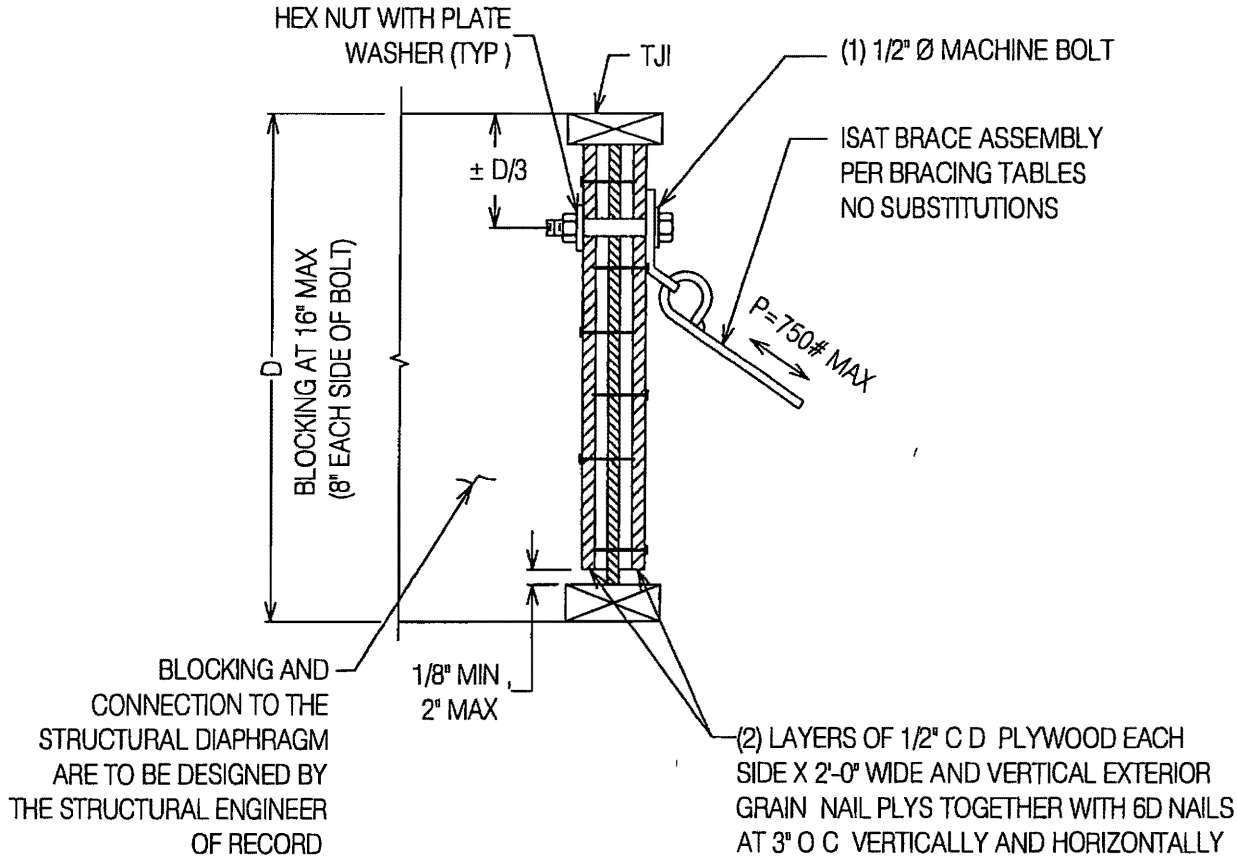

STRUCTURAL ENGINEER OF RECORD TO CONFIRM SUITABILITY OF STRUCTURE TO ACCOMMODATE THE LOADS SHOWN

WOOD JOIST WITH BRACE ARM PERPENDICULAR TO JOIST

ISAT
International Seismic Application Technology
14848 Northam Street, La Mirada, CA 90638
877-999-4728 (Toll Free) 714-523-0845 (fax)
www isatsb com

City of Portland
REVIEW TO BE FOR CODE COMPLIANCE
JUN 05 2012
Permit Number

W V Jaugen
Model Law Structural Engineer
NCEES No 20675

Rev 1
10/01/06

Page
D7.1

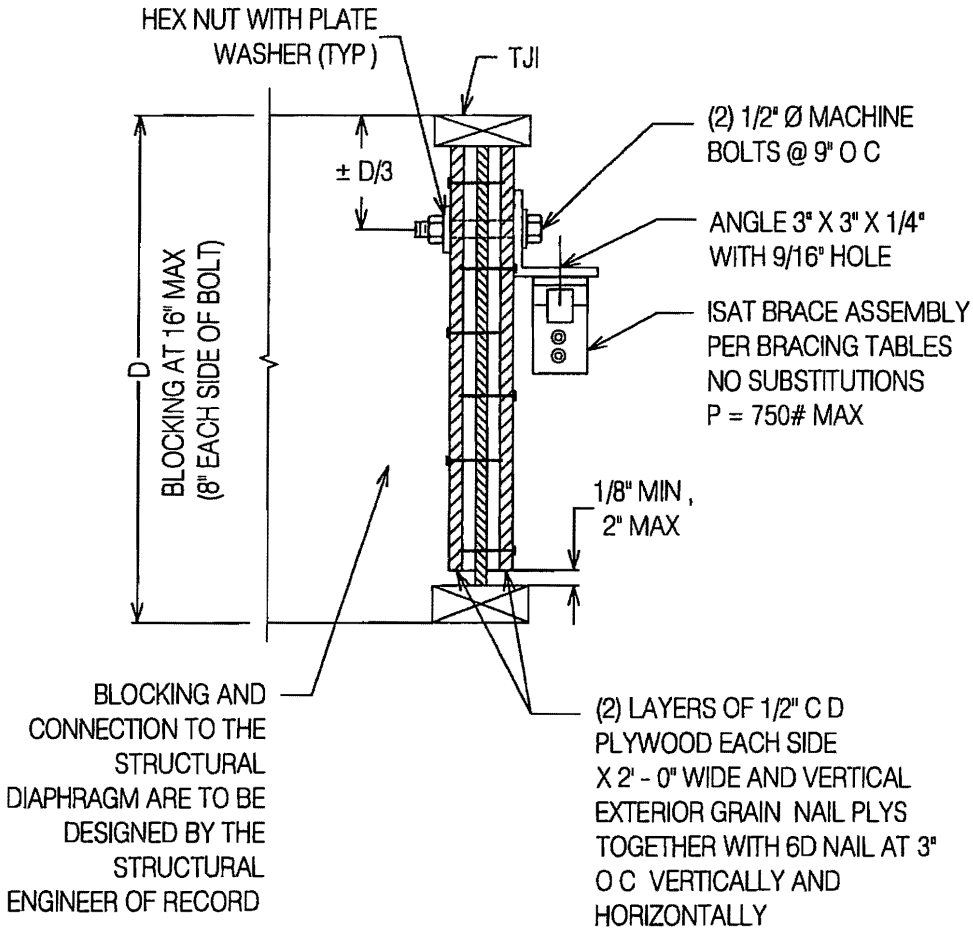

STRUCTURAL ENGINEER OF RECORD TO CONFIRM SUITABILITY OF STRUCTURE TO ACCOMMODATE THE LOADS SHOWN

WOOD JOIST WITH BRACE ARM PARALLEL TO JOIST

ISAT
International Seismic Application Technology
14848 Northam Street, La Mirada, CA 90638
877-999-4728 (Toll Free) 714-523-0845 (fax)
www.isatsb.com

City of Portland
REVIEWED FOR CODE COMPLIANCE
JUN 05 2012
Permit Number

W V Joseph
Model Law Structural Engineer
NCEES No 20675

Rev 1
10/01/08

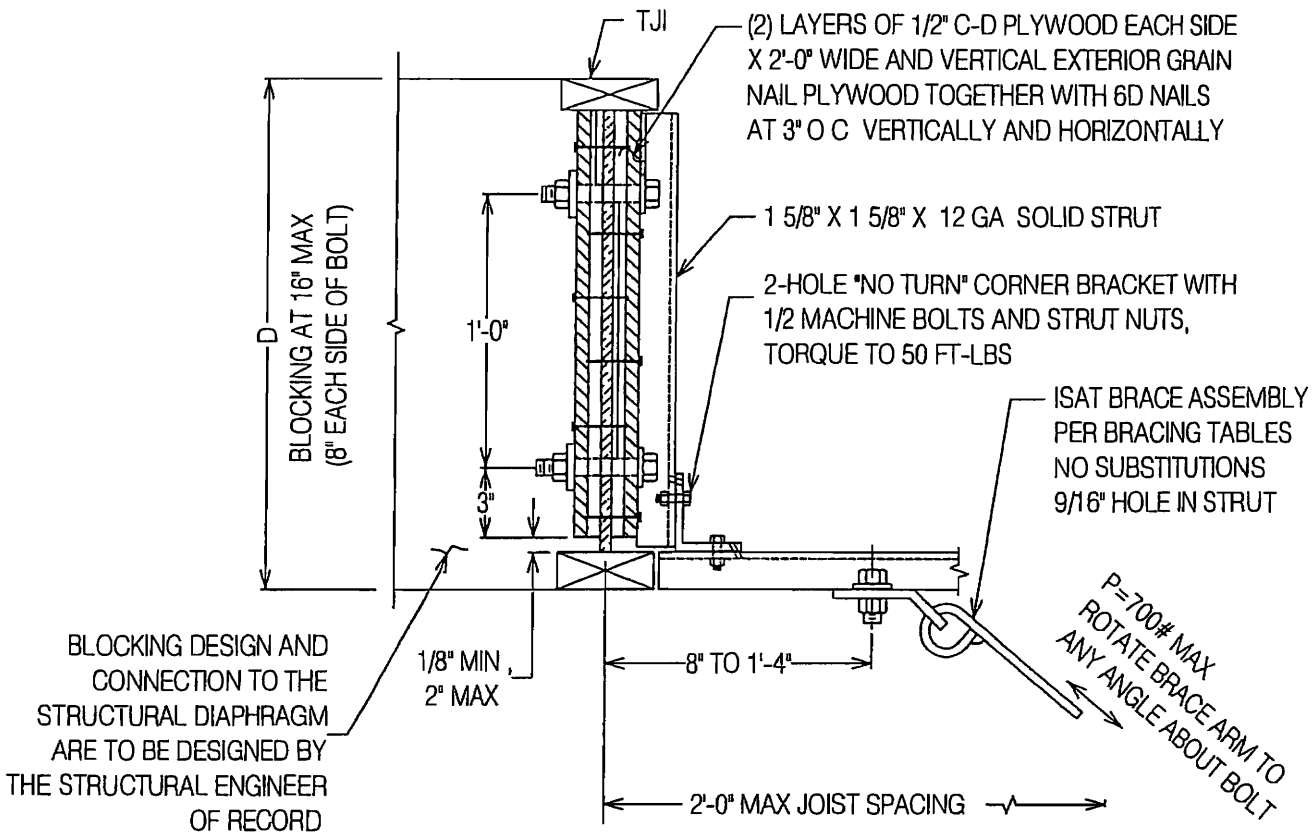

STRUCTURAL ENGINEER OF RECORD TO CONFIRM SUITABILITY OF STRUCTURE TO ACCOMMODATE THE LOADS SHOWN

WOOD JOIST WITH BRACE ARM CONNECTION TO STRUT

International Seismic Application Technology
14848 Northam Street, La Mirada, CA 90638
877-999-4728 (Toll Free) 714-523-0845 (fax)
www isatsb com

City of Portland
REVIEWED FOR CODE COMPLIANCE
JUN 05 2012
Permit Number

Model Law Structural Engineer
NCEES No 20675

Rev 1
10/01/08

Directory - ISAT Cable Brace Assemblies

ISAT Brace [1] Assembly	Rod Diameter Inch	ISAT Seismic Brackets [1] Lower Bracket Page F___	ISAT Seismic Brackets [1] Upper Bracket Page F___	Cable Brace Arm Dia Inch	Cable Brace Assembly Design Value (P) [2] To Rod Lbs	Cable Brace Assembly Design Value (P) [2] Not To Rod Lbs	Brace Assembly Detail Page
CB1	3/8	S250R	S250R	1/16	160	160	E4 3
CB1 1	3/8	S250R	S250R	1/8	300	300	E4 3
CB2	3/8	RCHWS38	ABHWS	1/8	667	667	E4 1
CB3	3/8	RCHWS38	ABHWS	3/16	950	950	E4 1
CB4	Reserved For Future Use						
CB5	3/8	RCCX38	ABF12	3/16	1,115	1,400	E4 2
CB6	3/8	RCCX38	ABF12	1/4	1,115	1,865	E4 2
CB10	1/2	RCHWS12	ABHWS	1/8	667	667	E4 1
CB11	1/2	RCHWS12	ABHWS	3/16	950	950	E4 1
CB12	1/2	RCHWX12	ABHWS	1/4	1,860	1,860	E4 2
CB13	1/2	RCHWX12	RCHWX12	1/4	2,060	2,185	E4 2
CB14	1/2	RCCX12	ABF34	3/16	1,400	1,400	E4 2
CB15	1/2	RCCX12	ABF34	1/4	1,960	1,960	E4 2
CB20	5/8	RCHW58	ABHWS	3/16	1,400	1,400	E4 2
CB21	5/8	RCHW58	ABHWS	1/4	1,860	1,860	E4 2
CB22	5/8	RCHW58	RCHW58	1/4	2,185	2,185	E4 2
CB23	5/8	RCC58	ABF12	3/16	1,400	1,400	E4 2
CB24	5/8	RCC58	ABF12	1/4	1,865	1,865	E4 2
CB25	5/8	RCC58	ABF34	1/4	1,960	1,960	E4 2
CB30	3/4	RCHW34	ABHWS	3/16	1 400	1,400	E4 2
CB31	3/4	RCHW34	ABHWS	1/4	1 860	1,860	E4 2
CB32	3/4	RCHW34	RCHW58	1/4	2,185	2,185	E4 2
CB33	3/4	RCC34	ABF12	3/16	1,400	1,400	E4 2
CB34	3/4	RCC34	ABF12	1/4	1,865	1,865	E4 2
CB35	3/4	RCC34	ABF34	1/4	1,960	1,960	E4 2
CB40	7/8	RCHW78	ABHWS	3/16	1,400	1,400	E4 2
CB41	7/8	RCHW78	ABHWS	1/4	1,860	1,860	E4 2
CB42	7/8	RCHW78	RCHW58	1/4	2,185	2,185	E4 2
CB50	1	RCHW100	ABHWS	3/16	1,400	1,400	E4 2
CB51	1	RCHW100	ABHWS	1/4	1,860	1,860	E4 2
CB52	1	RCHW100	RCHW58	1/4	2,185	2,185	E4 2
CB60	N/A	ABHWS	ABHWS	3/16	N/A	950	E4 1
CB60	N/A	ABHWS	ABHWS	3/16	N/A	1,400	E4 2
CB61	N/A	ABHWS	ABHWS	1/4	N/A	1,860	E4 2
CB62	N/A	ABF34	ABF34	5/16	N/A	3,267	E4 2

1 Use of Any Non-ISAT Bracket Voids Engineering

2 At Nominal 45 Degree Brace Angle

ISAT

International Seismic Application Technology
14848 Northam Street, La Mirada, CA 90638
877-999-4728 (Toll Free) 14-523-0845 (fax)
www isatsb com

City of Portland
REVIEW BY LOCAL CODE COMPLIANCE
JUN 05 2012
Permit Number

W V Jaugen
Model Law Structural Engineer
NCEES No 20675

S250R

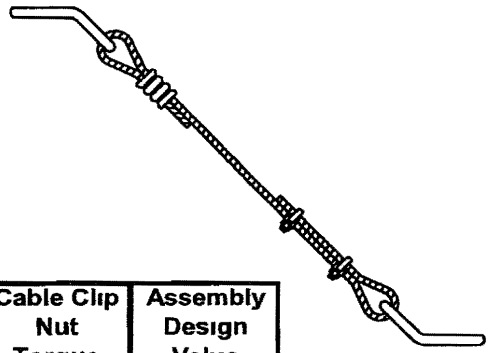

S250R TO S250R

Cable Diameter Inch	Minimum Turn Back Inch	Nominal Clip Spacing Inch	Cable Clip Nut Torque Ft - Lbs	Assembly Design Value Lbs
1/16	3	2	4	160
1/8	3 1/4	2 1/4	4 5	300

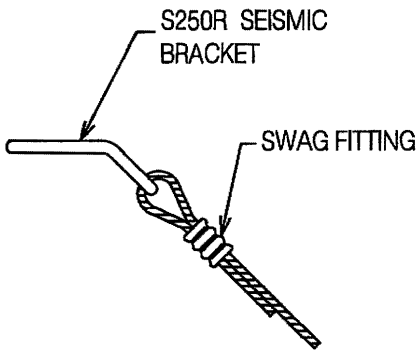

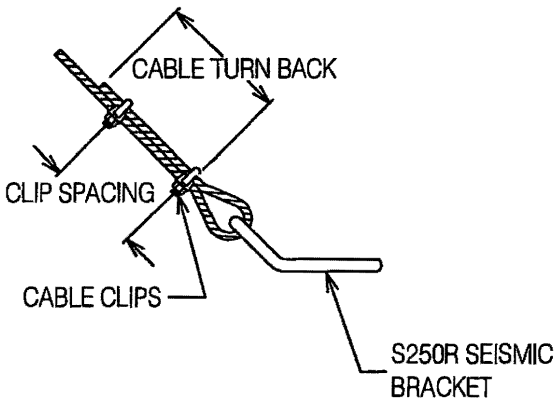

S250R TO S250R CABLE ASSEMBLY

REFER TO NOTE 18, PAGE 4 3 FOR CABLE TENSIONING ON NON-VIBRATION ISOLATED INSTALLATIONS

S250R CABLE TIE ASSEMBLY

CABLE BRACING TO BE INSTALLED IN A SYMETRICAL PATTERN PER B-SERIES INSTALLATION DETAILS

ISAT

International Seismic Application Technology
14848 Northam Street, La Mirada, CA 90638
877-999-4728 (Toll Free) 714-523-0845 (fax)
www isatsb com

W V Jaugin
Model Law Structural Engineer
NCEES No 20675

City of Portland
REVIEW DEPARTMENT COMPLETE
JUN 05 2012
Permit Number

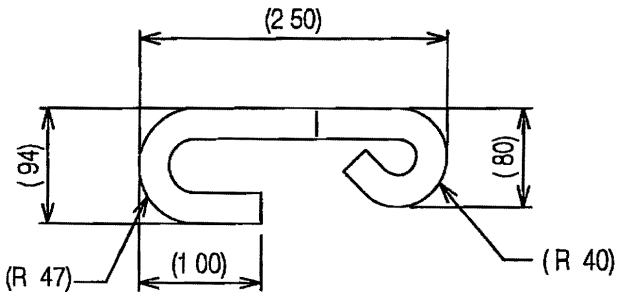

TOP VIEW

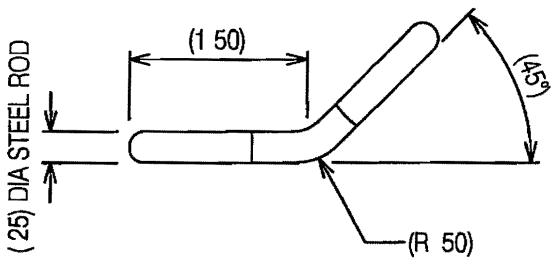

FRONT VIEW

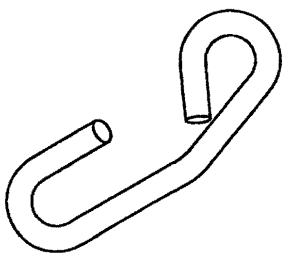

ISO VIEW

STYLE "S250R" ROD CAPTURE LIGHT DUTY BRACKET

DESIGN VALUE: 300 LBS.

International Seismic Application Technology
14848 Northam Street, La Mirada, CA 90638
877-999-4728 (Toll Free) 714-523-0845 (fax)
www Isatsb com

City of Portland
REVIEWED FOR CODE COMPLIANCE
JUN 05 2012
Permit Number

W V Jaugen
Model Law Structural Engineer
NCEES No 20675

Rev 0
11/01/06

Page
F1 2

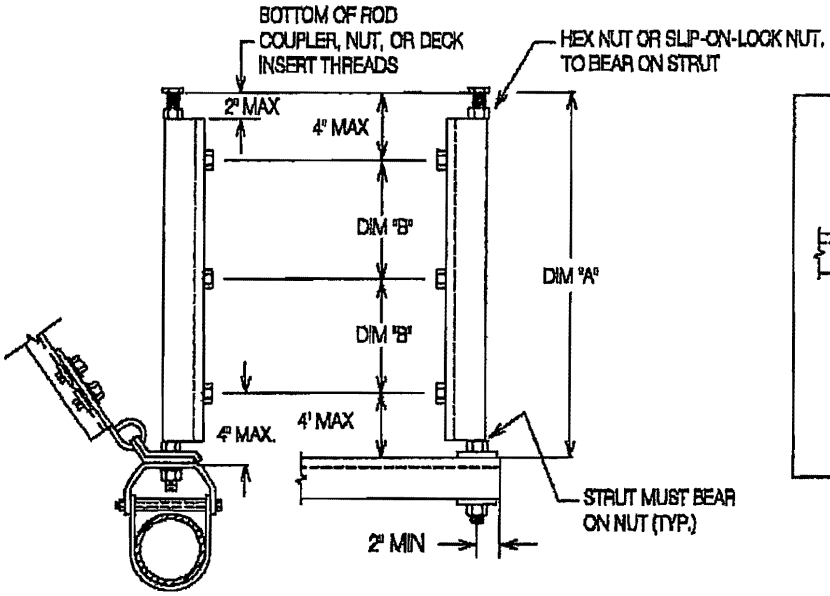

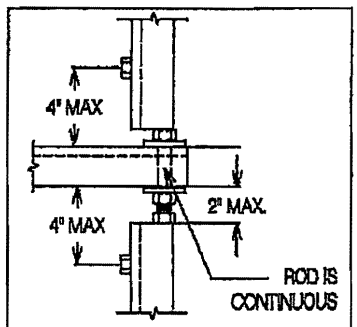

DETAIL AT MULTI-TIERED TRAPEZE SYSTEMS

Rod Stiffener Chart		
Threaded Rod Diameter Inch	Dim A Maximum Rod Length Without Stiffener Inch	Dim B Maximum Spacing Between Rod Stiffeners Inch
3/8	16	20
1/2	18	22
5/8	24	28
3/4	30	30
7/8	40	40
1	46	46
1 1/8	54	54
1 1/4	58	58
1 3/8	66	66
1 1/2	72	72

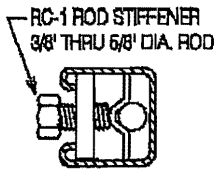

STRUT,
1 5/8" x 1 5/8" x 12 GA.
SOLID OR SLOTTED x 8'-0" MAX
1 5/8" x 1 5/8" x 12 GA.
SOLID BACK-TO-BACK x 15-0"
MAX. (NOT SHOWN)

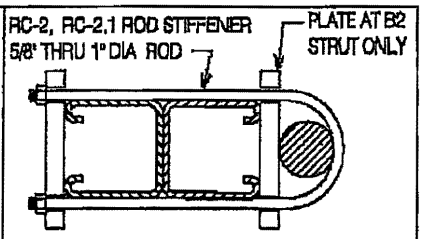

STRUT
RC2: B1 STRUT 1 5/8" x 1 5/8" x 12 GA.
SOLID OR SLOTTED x 8'-0" MAX. (NOT SHOWN)
RC2.1. B2 STRUT 1 5/8" x 1 5/8" x 12 GA.
SOLID BACK-TO-BACK x 15-0" MAX.
(AS SHOWN)

NOTICE ROD STIFFENING REQUIRED ONLY FOR HANGER RODS TO WHICH SEISMIC BRACING HAS BEEN INSTALLED.

TIGHTEN STIFFENER NUT TO FINGER TIGHT PLUS 2 FULL TURNS OF THE NUT

MAX. ALLOWABLE STRUT COMPRESSION:
B1 SOLID = 2900 LBS B1 SLOTTED = 2000 LBS
B2 SOLID = 2100 LBS B2 SLOTTED NOT ALLOWED

NOTE.
ROD STIFFENERS MAY BE ELIMINATED WHERE TWO RIGID BRACES ARE ATTACHED TO THE SAME ROD AND ARE 180 DEGREES OPPOSED TO ONE ANOTHER.

ROD STIFFENING REQUIREMENTS

ISAT
International Seismic Application Technology
14848 Northam Street, La Mirada, CA 90638
877 999-4728 (Toll Free) 714-523-0845 (fax)
www.isatsb.com

City of Portland
REVIEWED FOR CODE COMPLIANCE
JUN 05 2012
Permit Number

W V Jaugen
Model Law Structural Engineer
NCEES No 20675

Rev 2
11/01/08

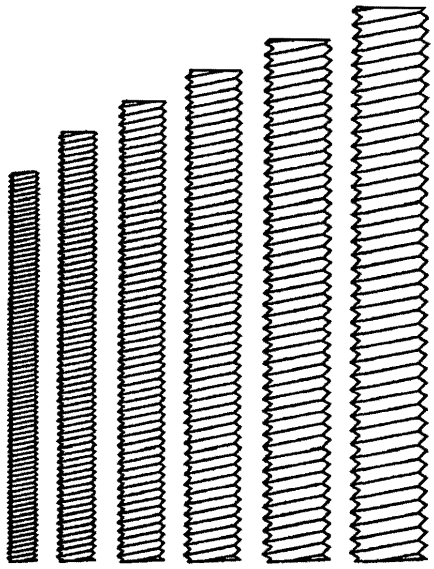

Rod Diameter Inch	Min ASTM A36 Steel	
	High Temperature Applications Maximum Tension Design Value Lbs	Building Services Piping Maximum Tension Design Value Lbs
3/8	610	790
1/2	1,130	1,460
5/8	1,810	2,340
3/4	2,710	3,500
7/8	3,770	4,860
1	4,960	6,400
1-1/8	6,230	8,000
1-1/4	8,000	10,300
1-3/8	-	12,180
1-1/2	-	14,960
1-3/8	-	20,180
2	-	26,680
	ASME B31 1 Rod Temp of 650 Deg	ASME B31 9

ALL-THREAD ROD FOR VERTICAL SUPPORTS

City of Portland
REVIEW BY DEVELOPMENT COMPLIANCE
JUN 05 2012
Permit Number

ISAT
International Seismic Application Technology
14848 Northam Street, La Mirada, CA 90638
877-999-4728 (Toll Free) 714-523-0845 (fax)
www isatsb com

W V Jaugen
Model Law Structural Engineer
NCEES No 20675

INTERNATIONAL SEISMIC
APPLICATION TECHNOLOGY

Ground Mounted Equipment Details

City of Portland
REVIEWED FOR CODE
COMPLIANCE
JUN 05 2012
Permit Number

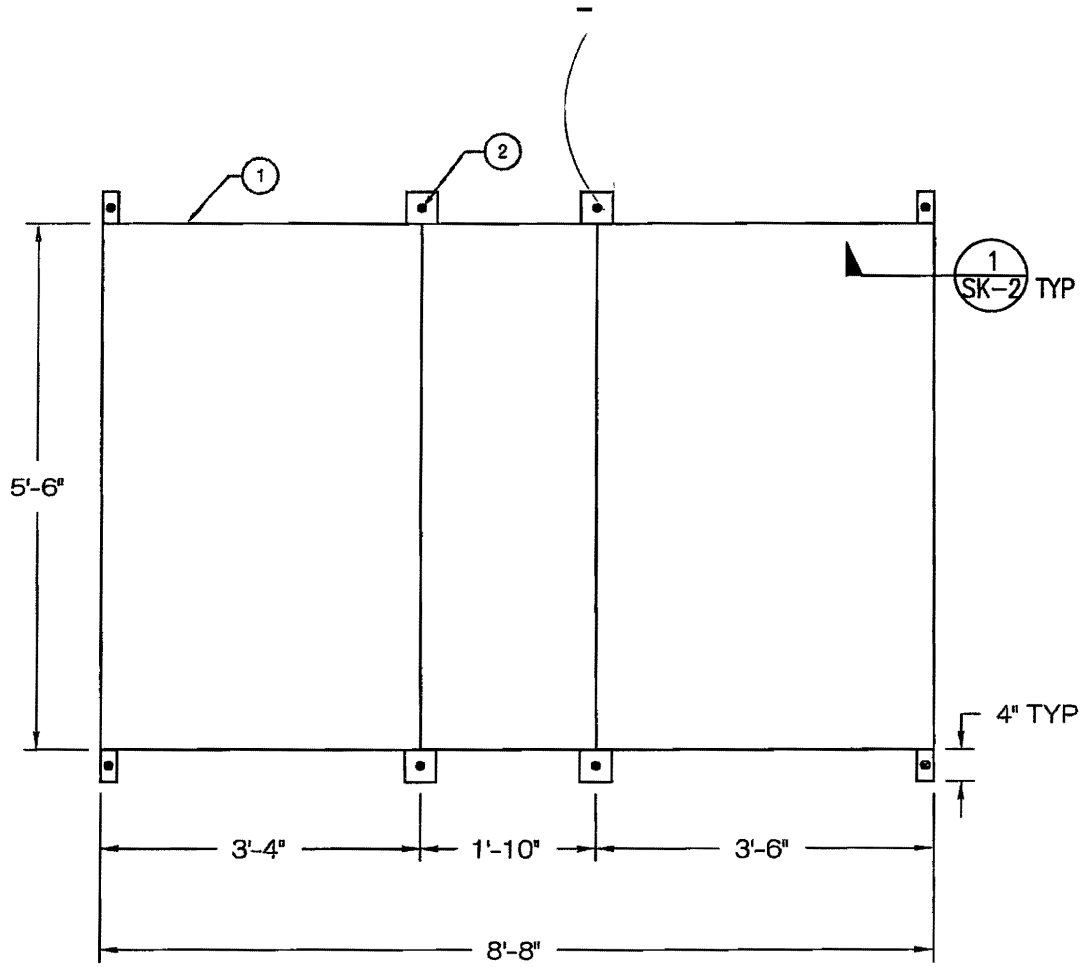

1 HRU-6-1 ANCHORAGE PLAN VIEW

SCALE 1/2" = 1'-0"

NOTES

1 EQUIPMENT OUTLINE
(MAX WEIGHT = 2879 LBS)

2 CONNECTION PER DETAIL, TYP

NOTE

A INDIVIDUAL UNITS ARE ASSUMED TO BE RIGIDLY ATTACHED TO EACH OTHER

City of Portland
REVIEWED FOR CODE COMPLIANCE
JUN 05 2012
Permit Number

ISAT
International Seismic Application Technology
5070 NW 235th Ave Suite # 101
Hillsboro, OR 97124
www isatsb com

PROJECT LEWIS & CLARK COLLEGE NEW RESIDENTIAL HALL	ORIGINAL 02/06/12
	DRAWN BY MSV
CONTRACTOR GENERAL SHEET METAL WORKS	PAGE SK-1

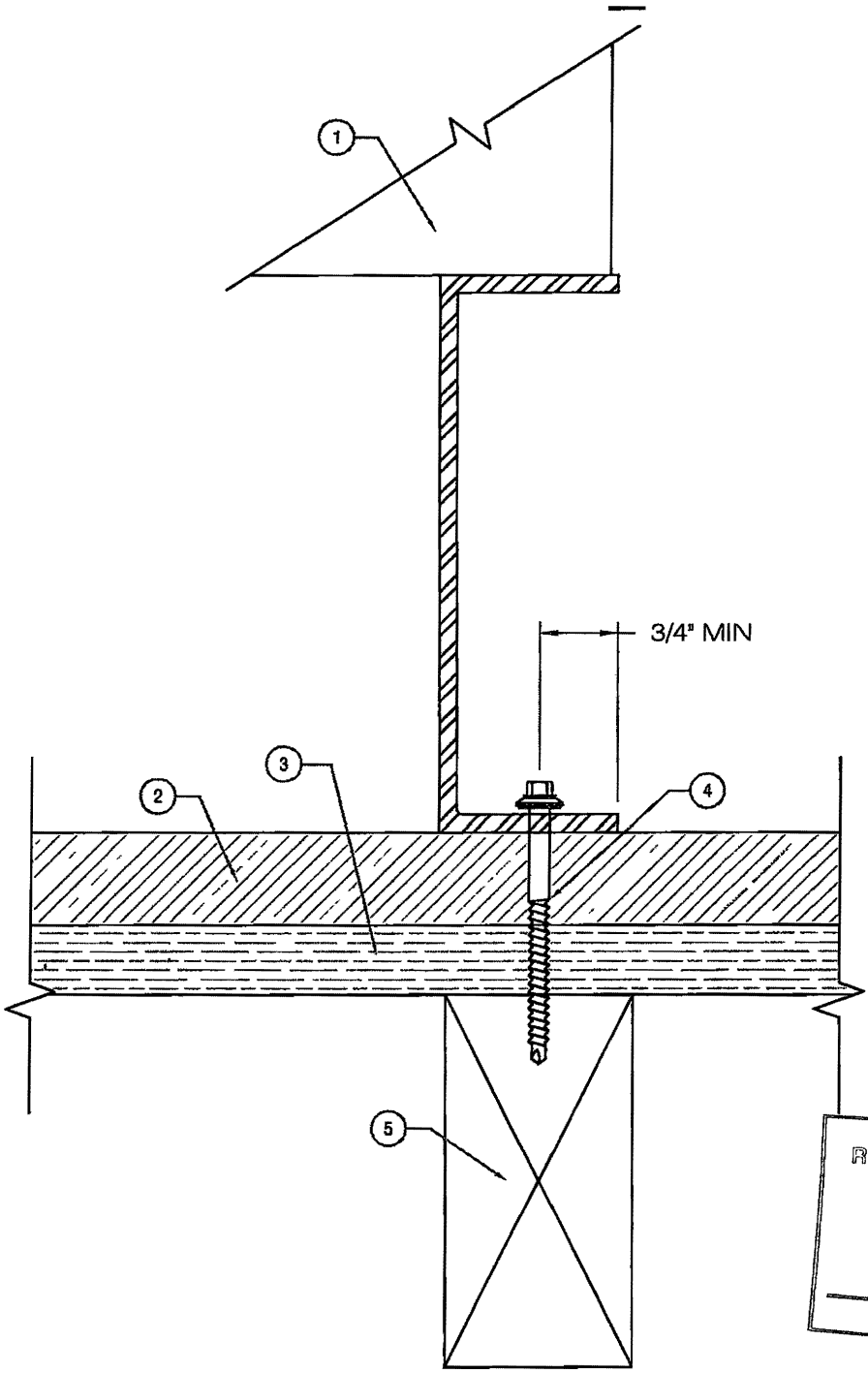

City of Portland
REVIEWED FOR CODE COMPLIANCE
JUN 05 2012
Permit Number

1 CONNCECTION DETAIL

SCALE 3" = 1'-0"

NOTES

1 EQUIPMENT AND ITS ATTACHMENT TO UNIT BASE BY OTHERS

2 (E) 1" THICK LAYER GYPCRETE BY OTHERS

3 (E) $\frac{3}{4}$" THICK PLYWOOD BY OTHERS

4 3" LONG $\frac{3}{8}$"Ø LAG SCREW, TYP

5 4x WOOD BLOCKING BY OTHERS

ISAT
International Seismic Application Technology
5070 NW 235th Ave Suite # 101
Hillsboro, OR 97124
www isatsb com

PROJECT LEWIS & CLARK COLLEGE NEW RESIDENTIAL HALL	ORIGINAL 02/06/12
	DRAWN BY MSV
CONTRACTOR GENERAL SHEET METAL WORKS	PAGE

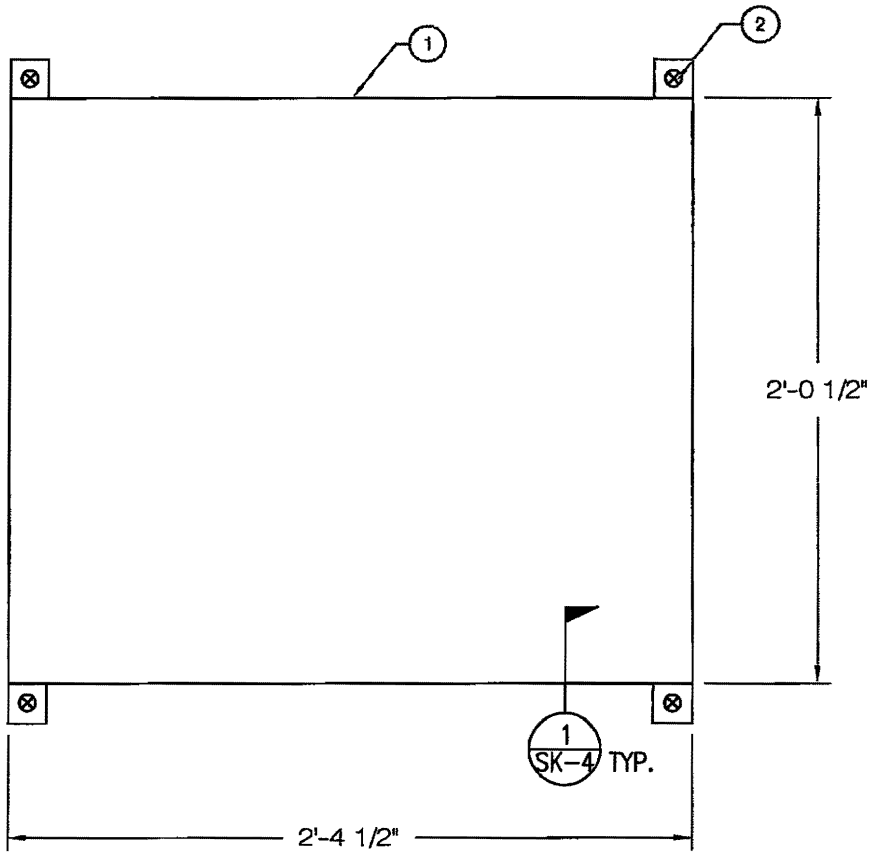

1 HRU-6-1 ANCHORAGE PLAN VIEW

SCALE 1/2" = 1'-0"

City of Portland
REVIEWED FOR CODE COMPLIANCE
JUN 05 2012
Permit Number

NOTES

1 EQUIPMENT OUTLINE
(MAX WEIGHT = 234 LBS)

2 CONNECTION PER DETAIL, TYP

ISAT
International Seismic Application Technology
5070 NW 235th Ave Suite # 101
Hillsboro, OR 97124
www isatsb com

PROJECT	ORIGINAL 02/06/12
LEWIS & CLARK COLLEGE NEW RESIDENTIAL HALL	DRAWN BY MSV
CONTRACTOR GENERAL SHEET METAL WORKS	PAGE

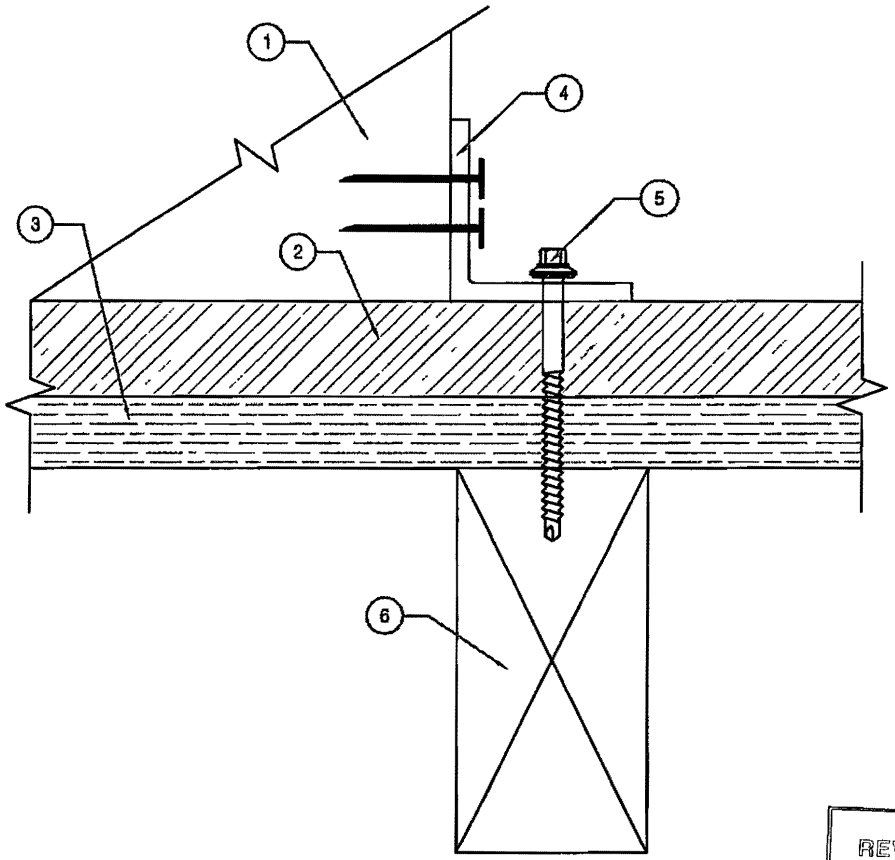

City of Portland
REVIEW FOR CODE COMPLIANCE
JUN 05 2012
Permit Number

1 CONNCECTION DETAIL

SCALE 6" = 1'-0"

NOTES

1 EQUIPMENT BY OTHERS

2 (E) 1" THICK LAYER GYPCRETE BY OTHERS

3 (E) $\frac{3}{4}$" THICK PLYWOOD BY OTHERS

4 L2x2x$\frac{1}{4}$" x 0'-2" LONG BRACKET W/ (2) #12 SMS, TYP OF (4)

5 3" LONG $\frac{3}{8}$"Ø LAG SCREW
- CENTER IN HORIZONTAL LEG OF ANGLE

6 4x WOOD BLOCKING BY OTHERS

ISAT
International Seismic Application Technology
5070 NW 235th Ave Suite # 101
Hillsboro, OR 97124
www isatsb com

PROJECT	ORIGINAL 02/06/12
LEWIS & CLARK COLLEGE NEW RESIDENTIAL HALL	DRAWN BY MSV
CONTRACTOR GENERAL SHEET METAL WORKS	PAGE SK-4

INTERNATIONAL SEISMIC
APPLICATION TECHNOLOGY

Ground Mounted Equipment Calculations

City of Portland
REVIEWED FOR CODE
COMPLIANCE
JUN 05 2012
Permit Number

Conterminous 48 States
2003 NEHRP Seismic Design Provisions
Latitude = 45 448
Longitude = -122 671
Spectral Response Accelerations Ss and S1
Ss and S1 = Mapped Spectral Acceleration Values
Site Class B - Fa = 1 0 ,Fv = 1 0
Data are based on a 0 05 deg grid spacing

Period (sec)	Sa (g)	
0 2	0 978	(Ss, Site Class B)
1 0	0 342	(S1, Site Class B)

Conterminous 48 States
2003 NEHRP Seismic Design Provisions
Latitude = 45 448
Longitude = -122 671
Spectral Response Accelerations SMs and SM1
SMs = Fa x Ss and SM1 = Fv x S1
Site Class D - Fa = 1 109 ,Fv = 1 716

Period (sec)	Sa (g)	
0 2	1 085	(SMs, Site Class D)
1 0	0 587	(SM1, Site Class D)

Conterminous 48 States
2003 NEHRP Seismic Design Provisions
Latitude = 45 448
Longitude = -122 671
Design Spectral Response Accelerations SDs and SD1
SDs = 2/3 x SMs and SD1 = 2/3 x SM1
Site Class D - Fa = 1 109 ,Fv = 1 716

Period (sec)	Sa (g)	
0 2	0 723	(SDs, Site Class D)
1 0	0 391	(SD1, Site Class D)

INTERNATIONAL SEISMIC APPLICATION TECHNOLOGY

2009 IBC - SEISMIC DESIGN FORCE (SDF) CALCULATION WORKSHEET
INTERNATIONAL SEISMIC APPLICATION TECHNOLOGY

5070 NW 235th Ave Suites #101, Hillsboro, OR 97124

Date 2/6/2012

Project Name LEWIS & CLARK - NEW RESIDENCE HALL

Project Zip Code 97219

Location PORTLAND, OR

Contractor GENERAL SHEET METAL WORKS

Equipment MAU-1-1

PROJECT SEISMIC ENGINEERING PARAMETERS

Note The following Seismic Criteria was obtained from the structural portion of the project documents Information not provided in the project documents has been derived from the code sections or tables noted below

Design spectral response acceleration (5% Damped) at short periods (Section 11 4 4)	S_{DS} =	0 720
Information may not appear for the variables below if S_{DS} is shown on the line above		
The MCE, 5% damped, spectral response acceleration at short periods (Section 11 4 3)	S_{MS} =	1 09
Mapped MCE, 5% damped, spectral response acceleration at short periods (Section 11 4 1)	S_S =	0 98
Short-Period site coefficient (at 0 2 s-period), (Section 11 4 3)	F_a =	1 11
Mapped MCE, 5% damped, Spectral Response at a period of 1s (Section 11 4 1)	S_1 =	0 34
Site Class (Table 20 3-1)	Site Class =	D
Seismic Design Category (Table 11 6-1)	Seismic Design Category =	D
Information may not appear for the variables below if Seismic Design Category is shown on the line above		
Occupancy Category (Table 1-1)	Occupancy Category =	IV
Component Importance Factor (Section 13 1 3)	I_p =	1 00
Component Amplification Factor (Table 13 6-1)	a_p =	2 50
Component Response Modification Factor (Table 13 6-1)	R_p =	2 50
Average Roof Height of Structure Relative to the Base Elevation	h =	1 00

***Tables and Sections noted above derive from the ASCE 7-05 per IBC 2009*

2009 IBC SEISMIC FORCE (F_p) CALCULATION (FROM ASCE 7-05, CHAPTER 13)

$$F_p = \frac{0\,4\,a_p \times S_{DS} \times W_p}{(R_p/I_p)} \times (1 + 2(z/h)) \quad \text{(Eq. 13 3-1)}$$

Floor # / Story	z (Ft)	F_p*	F_p shall not be less than $0.3 \times S_{DS} \times I_p \times W_p$ =	F_p need not be greater than $1\,6 \times S_{DS} \times I_p \times W_p$ =	F_p**	F_p/1.4
1	0	0 29	0 22	1 15	0 29	0 21
ROOF	1	0 86	0 22	1 15	0 86	0 62

z = Overhead Deck Elevation From Grade (ft.)
F_p* = As calculated per equation 13 3-1
F_p** = Value used for design, resultant after comparison to minimum & maximum limits
F_p/1.4. Converts Fp to "Allowable Stress Design" Use this value in conjunction with ISAT Bracing Tables

INTERNATIONAL SEISMIC APPLICATION TECHNOLOGY

2009 IBC - SEISMIC DESIGN FORCE (SDF) CALCULATION WORKSHEET
INTERNATIONAL SEISMIC APPLICATION TECHNOLOGY

5070 NW 235th Ave Suites #101, Hillsboro, OR 97124

Date 2/6/2012

Project Name LEWIS & CLARK - NEW RESIDENCE HALL

Project Zip Code 97219

Location PORTLAND, OR

Contractor GENERAL SHEET METAL WORKS

Equipment HRU-6-1

PROJECT SEISMIC ENGINEERING PARAMETERS

Note The following Seismic Criteria was obtained from the structural portion of the project documents Information not provided in the project documents has been derived from the code sections or tables noted below

Design spectral response acceleration (5% Damped) at short periods (Section 11 4 4)	S_{DS} =	0 720
Information may not appear for the variables below if S_{DS} is shown on the line above		
The MCE, 5% damped, spectral response acceleration at short periods (Section 11 4 3)	S_{MS} =	1 09
Mapped MCE, 5% damped, spectral response acceleration at short periods (Section 11 4 1)	S_S =	0 98
Short-Period site coefficient (at 0 2 s-period), (Section 11 4 3)	F_a =	1 11
Mapped MCE, 5% damped, Spectral Response at a period of 1s (Section 11 4 1)	S_1 =	0 34
Site Class (Table 20 3-1)	Site Class =	D
Seismic Design Category (Table 11 6-1)	Seismic Design Category =	D
Information may not appear for the variables below if Seismic Design Category is shown on the line above		
Occupancy Category (Table 1-1)	Occupancy Category =	IV
Component Importance Factor (Section 13 1 3)	I_p =	1 00
Component Amplification Factor (Table 13 6-1)	a_p =	2 50
Component Response Modification Factor (Table 13 6-1)	R_p =	6 00
Average Roof Height of Structure Relative to the Base Elevation	h =	1 00

***Tables and Sections noted above derive from the ASCE 7-05 per IBC 2009*

2009 IBC SEISMIC FORCE (F_p) CALCULATION (FROM ASCE 7-05, CHAPTER 13)

$$F_p = \frac{0\,4\,a_p \times S_{DS} \times W_p}{(R_p/I_p)} \times (1 + 2(z/h)) \quad \text{(Eq 13.3-1)}$$

Floor # / Story	z (Ft)	F_p*	F_p shall not be less than $0.3 \times S_{DS} \times I_p \times W_p$ =	F_p need not be greater than $1.6 \times S_{DS} \times I_p \times W_p$ =	F_p**	F_p/1.4
1	0	0 12	0 22	1 15	0 22	**0 15**
ROOF	1	0 36	0 22	1 15	0 36	**0 26**

z = Overhead Deck Elevation From Grade (ft.)
F_p* = As calculated per equation 13 3-1
F_p = Value used for design, resultant after comparison to minimum & maximum limits**
F_p/1.4 Converts Fp to "Allowable Stress Design" Use this value in conjunction with ISAT Bracing Tables

INTERNATIONAL SEISMIC APPLICATION TECHNOLOGY

2009 IBC - SEISMIC DESIGN FORCE (SDF) CALCULATION WORKSHEET
INTERNATIONAL SEISMIC APPLICATION TECHNOLOGY

5070 NW 235th Ave. Suites #101, Hillsboro, OR 97124

Date 2/6/2012

Project Name **LEWIS & CLARK - NEW RESIDENCE HALL**

Project Zip Code **97219**

Location **PORTLAND, OR**

Contractor **GENERAL SHEET METAL WORKS**

Equipment **GF-6-1**

PROJECT SEISMIC ENGINEERING PARAMETERS

Note The following Seismic Criteria was obtained from the structural portion of the project documents Information not provided in the project documents has been derived from the code sections or tables noted below

Design spectral response acceleration (5% Damped) at short periods (Section 11 4 4)	S_{DS} =	0 723
Information may not appear for the variables below if S_{DS} is shown on the line above		
The MCE, 5% damped, spectral response acceleration at short periods (Section 11 4 3)	S_{MS} =	1 09
Mapped MCE, 5% damped, spectral response acceleration at short periods (Section 11 4 1)	S_S =	0 98
Short-Period site coefficient (at 0 2 s-period), (Section 11 4 3)	F_a =	1 11
Mapped MCE, 5% damped, Spectral Response at a period of 1s (Section 11 4 1)	S_1 =	0 34
Site Class (Table 20 3-1)	Site Class =	D
Seismic Design Category (Table 11 6-1)	Seismic Design Category =	D
Information may not appear for the variables below if Seismic Design Category is shown on the line above		
Occupancy Category (Table 1-1)	Occupancy Category =	IV
Component Importance Factor (Section 13 1 3)	I_p =	1 50
Component Amplification Factor (Table 13 6-1)	a_p =	1 00
Component Response Modification Factor (Table 13 6-1)	R_p =	2 50
Average Roof Height of Structure Relative to the Base Elevation	h =	1 00

***Tables and Sections noted above derive from the ASCE 7-05 per IBC 2009*

2009 IBC SEISMIC FORCE (F_p) CALCULATION (FROM ASCE 7-05, CHAPTER 13)

$$F_p = \frac{0\,4\,a_p \times S_{DS} \times W_p}{(R_p/I_p)} \times (1 + 2(z/h)) \quad \text{(Eq 13 3-1)}$$

Floor # / Story	z (Ft)	F_p*	F_p shall not be less than $0.3 \times S_{DS} \times I_p \times W_p$ =	F_p need not be greater than $1\,6 \times S_{DS} \times I_p \times W_p$ =	F_p**	F_p/1.4
1	0	0 17	0 33	1 74	0 33	0 23
ROOF	1	0 52	0 33	1 74	0 52	0 37

z = Overhead Deck Elevation From Grade (ft.)
F_p* = As calculated per equation 13 3-1
F_p** = Value used for design, resultant after comparison to minimum & maximum limits
F_p/1.4 Converts Fp to "Allowable Stress Design" Use this value in conjunction with ISAT Bracing Tables.

	Opening	X	Y	Z	W(Width)	H(Height)
A	Fan discharge	-1 00	24 79	20 22	16 42	14 24
B	Exhaust inlet	104 00	2 00	8 00	62 00	38 00
C	Supply inlet	2 00	2 00	50 00	62 00	38 00
D	Fan discharge	103 00	24 79	62 22	16 42	14 24

MAX WEIGHT = 2879 lbs

Dimensions measured from ⌖

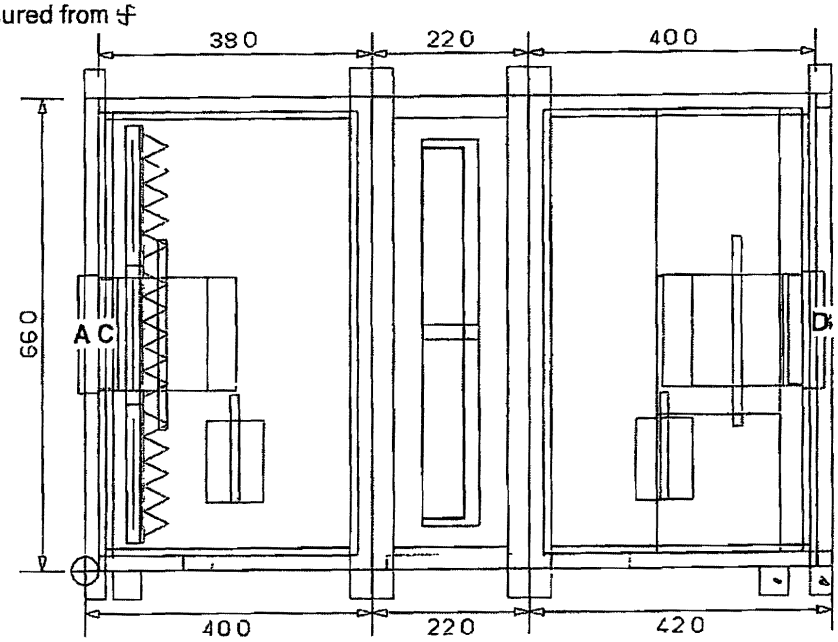

PLAN

Fig 5

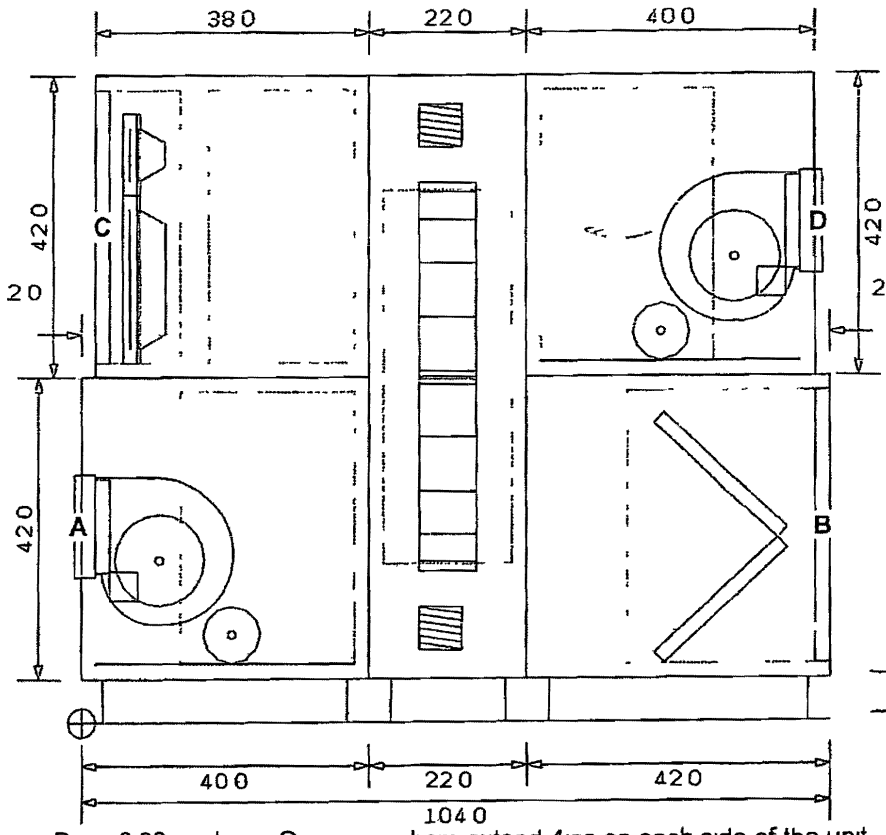

ELEV.

Fig 6

NOTE Base 6 00ins deep, Cross members extend 4ins on each side of the unit

VIEW	General Arrangement No Ends
DRAWN	July-20-2011 (15 33)
JOB NAME	Lewis and Clark
UNIT TAGGING	HRU-1
MODEL	CAH012GVAC

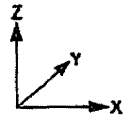

INTERNATIONAL SEISMIC APPLICATION TECHNOLOGY
5070 NW 235th Ave Suites #101
Hillsboro, OR 97124

JOB	LEWIS & CLARK - NEW RESIDENCE HALL		
SHEET NO		OF	
CALCULATED BY	MSV	DATE	2/9/12
CHECKED BY		DATE	
PROJECT NO			

DESIGN OF CONNECTIONS FOR HRU-6-1

EQUIPMENT INFORMATION

Equipment weight, W =	2879	lbs
Length Between Anchors, L =	104	in
Width between Anchors, w =	66	in
Maximum Dimension =	104	in
Height, h =	84	in
Height to C G , Hc g =	50	in
Eccentricity ey, (5%) =	5 2	in

SEISMIC FORCE

Fp =	0 26	x Wp =	748 5	lbs
Fv =	0 101	x Wp =	290 8	lbs

ANALYSIS.

M(overturning) = Fp x Hc g =	37726 4	in-lbs	
M(resisting) = (0 6xWp - Fv) x (w/2 - ey) =	39938 1	in-lbs	
Tension per side, Ts = (Mo - Mr)/w =	0 0	lbs	(if negative T = 0)
Shear per side, Vs = Fp/2 =	374 3	lbs	
Number of Connections per side, n =	4		
Tension per connection, T = Ts/n =	0 0	lbs	
Shear per connection, V = Vs/n =	93 6	lbs	

Multiply by 1 4 for ASD to LRFD conversion and 1 3 per ASCE7-05 13 4 2

T =	0	lbs
V =	170	lbs

CONTROLS
USE FOR DESIGN
OF LAG SCREWS

GF-6-1 MAX WEIGHT = 234 lbs

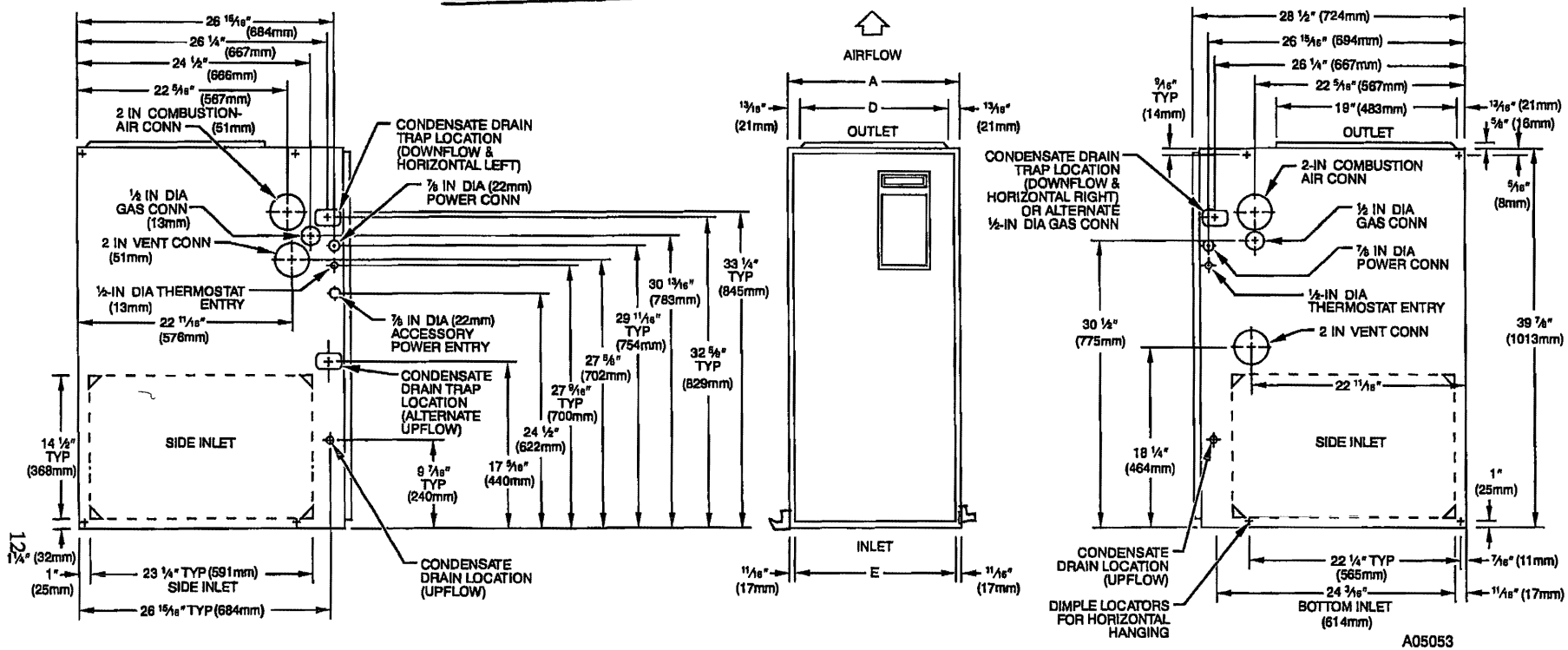

NOTES 1 Minimum return-air openings at furnace, based on metal duct If flex duct is used, see flex duct manufacturer's recommendation for equivalent diameters

2 Minimum return-air opening at furnace
- a For 800 CFM 16-in (406mm) round or 14 1/2 (368mm) x 12-in (305mm) rectangle
- b For 1200 CFM 20-in (508mm) round or 14 1/2 (368mm) x 19 1/2-in (495mm) rectangle
- c For 1600 CFM 22-in (559mm) round or 14 1/2 (368mm) x 23 1/4-in (591mm) rectangle
- d For airflow requirements above 1800 CFM, see Air Delivery table in Product Data literature for specific use of single side inlets The use of both side inlets, a combination of 1 side and the bottom, or the bottom only will ensure adequate return air openings for airflow requirements above 1800 CFM at 0 5" W C ESP

DIMENSIONS (IN / MM)			
UNIT SIZE	A	D	E
060–14	17–1/2 / 444 5	15–7/8 / 403 3	16 / 406 4
080–14	21 / 533 4	19–3/8 / 492 2	19–1/2 / 495 3
080–20	21 / 533 4	19–3/8 / 492 2	19–1/2 / 495 3
100–20	21 / 533 4	19–3/8 / 492 2	19–1/2 / 495 3
120–20	24–1/2 / 622 3	22–7/8 / 581 0	23 / 584 2

INTERNATIONAL SEISMIC APPLICATION TECHNOLOGY
5070 NW 235th Ave Suites #101
Hillsboro, OR 97124

JOB	LEWIS & CLARK - NEW RESIDENCE HALL		
SHEET NO		OF	
CALCULATED BY	MSV	DATE	2/9/12
CHECKED BY		DATE	
PROJECT NO			

DESIGN OF CONNECTIONS FOR GF-6-1

EQUIPMENT INFORMATION:

Equipment weight, W =	234	lbs
Length Between Anchors, L =	28 5	in
Width between Anchors, w =	24 5	in
Maximum Dimension =	28 5	in
Height, h =	40	in
Height to C G , Hc g =	24	in
Eccentricity ey, (5%) =	1 425	in

SEISMIC FORCE·

Fp =	0 37	x Wp =	86 6	lbs
Fv =	0 101	x Wp =	23 6	lbs

ANALYSIS.

M(overturning) = Fp x Hc g =	2077 9	in-lbs	
M(resisting) = (0 6xWp - Fv) x (w/2 - ey) =	1264 0	in-lbs	
Tension per side, Ts = (Mo - Mr)/w =	33 2	lbs	(if negative T = 0)
Shear per side, Vs = Fp/2 =	43 3	lbs	
Number of Connections per side, n =	2		
Tension per connection, T = Ts/n =	16 6	lbs	
Shear per connection, V = Vs/n =	21 6	lbs	

Multiply by 1 4 for ASD to LRFD conversion and 1 3 per ASCE7-05 13 4 2

T =	**30**	**lbs**
V =	**39**	**lbs**

ISAT
14325 N E Airport Way, #113
Portland, OR 97230
T 503 252 4423

5113 Pacific Hwy East, #3
Fife, WA 98424
T 253 926 2250

5070 N W 235th, Suite 101
Hillsboro, OR 97124

www.isatsb.com

Project: LEWIS & CLARK COLLEGE
Title/Scale: GM EQUIP.
Calculated By: MSV Date: 02/06/12
Checked By: Date:
Sheet No: of:

CHECK LAG SCREWS

TRY (4) 3/8" LAG SCREWS PER SIDE

$Z_{\parallel} = 260$ lbs
$Z_{T} = 160$ lb → LATERAL DESIGN VALUES FOR SINGLE SHEAR CONNECTIONS (2005 NDS PG. 94 TABLE 11K)

$F_b = 45{,}000$ psi

$\Omega = 1.67$

$F_b/\Omega = 27{,}000$ psi

$Z = d^3/6$ (SOLID CIRCLE)

$M_u = F_b Z = 240$ lb-in

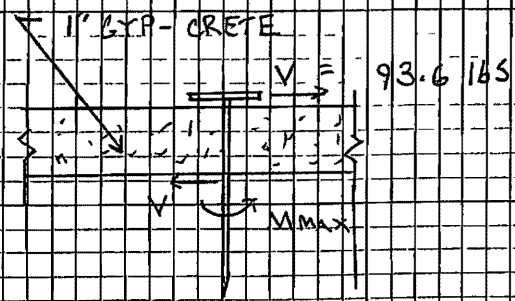

SHEAR

93.6 lb < 160 lb ∴ OKAY ✓

BENDING

$M_{max} = (93.6\text{ lb})(1'') = 83$ lb-in

93.6 lb-in < 240 lb-in ∴ OKAY ✓

COMBINED LOADING

$94/240 + 94/160 = 0.979 < 1.0$ ∴ OKAY

USE (4) 3/8" ø LAG SCREWS PER SIDE

INTERNATIONAL SEISMIC
APPLICATION TECHNOLOGY

Appendix

LAG SCREWS

Table 11K LAG SCREWS: Reference Lateral Design Values (Z) for Single Shear (two member) Connections[1,2,3]

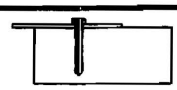

with 1/4" ASTM A 36 steel side plate, or ASTM A 653, Grade 33 steel side plate (for t_s < 1/4")

Side Member Thickness	Lag Screw Diameter	G=0.67 Red Oak		G=0.55 Mixed Maple Southern Pine		G=0.5 Douglas Fir-Larch		G=0.49 Douglas Fir-Larch (N)		G=0.46 Douglas Fir(S) Hem Fir(N)		G=0.43 Hem-Fir		G=0.42 Spruce-Pine Fir		G=0.37 Redwood (open grain)		G=0.36 Eastern Softwoods Spruce Pine Fir(S) Western Cedars Western Woods		G=0.35 Northern Species	
t_s	D	$Z_{\parallel}$	$Z_{\perp}$	$Z_{\parallel}$	$Z_{\perp}$	$Z_{\parallel}$	$Z_{\perp}$	$Z_{\parallel}$	$Z_{\perp}$	$Z_{\parallel}$	$Z_{\perp}$	$Z_{\parallel}$	$Z_{\perp}$	$Z_{\parallel}$	$Z_{\perp}$	$Z_{\parallel}$	$Z_{\perp}$	$Z_{\parallel}$	$Z_{\perp}$	$Z_{\parallel}$	$Z_{\perp}$
in	in.	lbs	lbs	lbs	lbs	lbs	lbs	lbs	lbs	lbs	lbs	lbs	lbs	lbs	lbs	lbs.	lbs	lbs	lbs	lbs	lbs
0.075	1/4	170	130	160	120	150	110	150	110	150	100	140	100	140	100	130	90	130	90	130	90
(14 gage)	5/16	220	160	200	140	190	130	190	130	190	130	180	120	180	120	170	110	170	110	160	100
	3/8	220	160	200	140	200	130	190	130	190	120	180	120	180	120	170	110	170	100	170	100
0.105	1/4	180	140	170	130	160	120	160	120	160	110	150	110	150	110	140	100	140	100	140	90
(12 gage)	5/16	230	170	210	150	200	140	200	140	190	130	190	130	190	120	180	110	170	110	170	110
	3/8	230	160	210	140	200	140	200	130	200	130	190	120	190	120	180	110	180	110	170	110
0.120	1/4	190	150	180	130	170	120	170	120	160	120	160	110	160	110	150	100	150	100	140	100
(11 gage)	5/16	230	170	210	150	210	140	200	140	200	140	190	130	190	130	180	120	180	120	180	110
	3/8	240	170	220	150	210	140	210	140	200	130	200	130	190	120	180	110	180	110	180	110
0.134	1/4	200	150	180	140	180	130	170	130	170	120	160	120	160	110	150	110	150	100	150	100
(10 gage)	5/16	240	180	220	160	210	150	210	140	200	140	200	130	200	130	190	120	180	120	180	120
	3/8	240	170	220	150	220	140	210	140	210	140	200	130	200	130	190	120	190	120	180	110
0.179	1/4	220	170	210	150	200	150	200	140	190	140	190	130	190	130	180	120	170	120	170	120
(7 gage)	5/16	260	190	240	170	230	160	230	160	230	150	220	150	220	150	210	130	200	130	200	130
	3/8	270	190	250	170	240	160	240	160	230	150	220	140	220	140	210	130	210	130	200	130
0.239	1/4	240	180	220	160	210	150	210	150	200	140	190	140	190	130	180	120	180	120	180	120
(3 gage)	5/16	300	220	280	190	270	180	260	180	260	170	250	160	250	160	230	150	230	150	230	140
	3/8	310	220	280	190	270	180	270	180	260	170	250	160	250	160	240	140	230	140	230	140
	7/16	420	290	390	260	380	240	370	240	360	230	350	220	350	220	330	200	330	200	320	190
	1/2	510	340	470	300	460	290	450	280	440	270	430	260	420	260	400	240	400	230	390	230
	5/8	770	490	710	430	680	400	680	400	660	380	640	370	630	360	600	330	590	330	580	320
	3/4	1110	670	1020	590	980	560	970	550	950	530	920	500	910	500	860	450	850	450	840	440
	7/8	1510	880	1390	780	1330	730	1320	710	1280	690	1250	650	1230	650	1170	590	1160	590	1140	570
	1	1940	1100	1780	960	1710	910	1700	890	1650	860	1600	820	1590	810	1500	740	1480	730	1460	710
1/4	1/4	240	180	220	160	210	150	210	150	200	140	200	140	190	130	180	120	180	120	180	120
	5/16	310	220	280	200	270	180	270	180	260	170	250	170	250	160	230	150	230	150	230	140
	3/8	320	220	290	190	280	180	270	180	270	170	260	160	250	160	240	150	240	140	230	140
	7/16	480	320	440	280	420	270	420	260	410	250	390	240	390	230	370	220	360	210	360	210
	1/2	580	390	540	340	520	320	510	320	500	310	480	290	480	290	460	270	450	260	440	260
	5/8	850	530	780	470	750	440	740	440	720	420	700	400	690	400	660	370	650	360	640	350
	3/4	1200	730	1100	640	1060	600	1050	590	1020	570	990	540	980	530	930	490	920	480	900	470
	7/8	1600	930	1470	820	1410	770	1400	750	1360	720	1320	690	1310	680	1240	630	1220	620	1200	600
	1	2040	1150	1870	1000	1800	950	1780	930	1730	900	1680	850	1660	840	1570	770	1550	760	1530	740

1 Tabulated lateral design values (Z) shall be multiplied by all applicable adjustment factors (see Table 10 3 1)

2 Tabulated lateral design values (Z) are for "reduced body diameter" lag screws (see Appendix L) inserted in side grain with screw axis perpendicular to wood fibers, minimum screw penetration, p, into the main member equal to 8D, dowel bearing strengths (F_e) of 61,850 psi for ASTM A 653, Grade 33 steel and 87,000 psi for ASTM A 36 steel and screw bending yield strengths (F_{yb}) F_{yb} = 70,000 psi for D = 1/4', F_{yb} = 60,000 psi for D = 5/16", F_{yb} = 45,000 psi for D ≥ 3/8"

3 When 4D ≤ p < 8D, tabulated lateral design values (Z) shall be multiplied by p/8D

ICC-ES Evaluation Report

ESR-2196

Reissued October 1, 2011

This report is subject to renewal in two years

www.icc-es.org | (800) 423-6587 | (562) 699-0543 *A Subsidiary of the International Code Council®*

DIVISION 05 00 00—METALS
Section 05 05 23—Metal Fastenings

DIVISION 06 00 00—WOOD, PLASTICS AND COMPOSITES
Section 06 05 23—Wood, Plastic, and Composite Fastenings

DIVISION 09 00 00—FINISHES
Section 09 29 10—Gypsum Board Accessories

REPORT HOLDER

HILTI, INC
5400 SOUTH 122ND EAST AVENUE
TULSA, OKLAHOMA 74146
(800) 879-8000
www.us.hilti.com
HNATechnicalServices@hilti.com

EVALUATION SUBJECT

HILTI SELF-DRILLING SCREWS

1.0 EVALUATION SCOPE

Compliance with the following codes

- 2009 *International Building Code®* (2009 IBC)
- 2009 *International Residential Code®* (IRC)
- 2006 *International Building Code®* (2006 IBC)*

*Codes indicated with an asterisk are addressed in Section 8.0

Property evaluated

Structural

2.0 USES

The Hilti Self-drilling Screws are used to connect cold-formed steel members together and to connect gypsum wall board, cement board, wood or other building materials to cold-formed steel. The screws are used in engineered connections of cold-formed steel and connections prescribed by the code for cold-formed steel framing and for sheathing to steel connections.

3.0 DESCRIPTION

3.1 General

The Hilti Self-drilling Screws are self-drilling tapping screws, case-hardened from carbon steel conforming to ASTM A 510, Grade 1018 to 1022. Table 1 provides screw designations, sizes and descriptions of head styles, point styles, drilling ranges and coatings. Screws are supplied in boxes of individual screws, or in collated plastic strips. See Figures 1 through 7 for depictions of the screws described in Sections 3.2 through 3.8, respectively.

3.2 HWH and HHWH Screws

The #8, #10, #12 and $^1/_4$-inch HWH and HHWH screws comply with ASTM C 1513 and SAE J78 and have Hex Washer or High Hex Washer head styles, respectively. The $^1/_4$-inch HWH screws have a larger diameter than #14 screws complying with ASTM B18.6.4, and may be used where generic #14 self-drilling tapping screws are specified. The screws have an electroplated zinc coating complying with the minimum corrosion resistance requirements of ASTM F 1941, or a proprietary coating, as indicated in Table 1.

3.3 PPH Screws

The #8 and #10 PPH screws comply with ASTM C 1513 and SAE J78 and have a Phillips Pan head style. The screws have an electroplated zinc coating complying with the minimum corrosion resistance requirements of ASTM F 1941.

3.4 PPFH SD Framer Screws

The #7 PPFH SD Framer screws comply with the material and performance requirements of ASTM C 1513. The dimensions of the screws comply with the manufacturer's quality documentation. The screws have a Phillips Pan Framing head style and have an electroplated zinc coating complying with EN/ISO 4042 A3F or a proprietary black phosphated coating, as indicated in Table 1.

3.5 PBH SD Drywall Screws

The #6 PBH SD and #8 PBH SD screws comply with ASTM C 954. The screws have a Phillips Bugle head style and have an electroplated zinc coating complying with EN/ISO 4042 A3F or a proprietary black phosphated coating, as indicated in Table 1.

3.6 PWH SD CMT BD Drywall Screws.

The #8 PWH SD CMT BD screws comply with ASTM C 954. The screws have a Phillips Wafer head style and have a proprietary coating.

3.7 PPCH SD Framer Screws

The #10 PPCH SD Framer screws comply with ASTM C 1513. The screws have a Phillips Pancake head style and an electroplated zinc coating complying with the minimum corrosion resistance requirements of ASTM F 1941.

ICC-ES Evaluation Reports are not to be construed as representing aesthetics or any other attributes not specifically addressed, nor are they to be construed as an endorsement of the subject of the report or a recommendation for its use. There is no warranty by ICC Evaluation Service, LLC, express or implied, as to any finding or other matter in this report, or as to any product covered by the report.

Copyright © 2011

3 8 PFTH SD Framer Screws

The #10 PFTH SD Framer screws comply with ASTM C 1513 The screws have a Phillips Flat Truss head style and an electroplated zinc coating complying with the minimum corrosion resistance requirements of ASTM F 1941

3 9 Cold-formed Steel

Cold-formed steel material must comply with Section A2 of AISI S100

4 0 DESIGN AND INSTALLATION

4 1 Design

4 1.1 General Screw thread length and point style must be selected on the basis of thickness of the fastened material and thickness of the supporting steel, respectively, in accordance with the manufacturer's published installation instructions

4 1.2 Prescriptive Design The Hilti HWH and HHWH screws, PPH screws, PPCH SD Framer screws and PFTH SD Framer screws described in Sections 3 2, 3 3, 3 7 and 3 8, respectively, are recognized for use where ASTM C 1513 screws of the same size are prescribed in AISI Standards referenced in IBC Section 2210

The Hilti PBH SD screws and PWH SD CMT BD screws described in Sections 3 4 and 3 5, respectively, are recognized for use in fastening gypsum board to cold-formed steel framing 0 033 inch to 0 112 inch (0 8 to 2 8 mm) thick, in accordance with IBC Section 2506 and IRC Section R702 3 6 They are also recognized for use in attaching gypsum board sheathing to cold-formed steel framing as prescribed in Section C2 2 3 of AISI S 213, which is referenced in IBC Section 2210 6

4 1.3 Engineered Design. The Hilti HWH and HHWH screws, PPH screws, PPCH SD Framer screws and PFTH SD Framer screws described in Sections 3 2, 3 3, 3 7 and 3 8, respectively, are recognized for use in engineered connections of cold-formed steel light-framed construction Design of the connections must comply with Section E4 of AISI S100, using the nominal and allowable fastener tension and shear strengths for the screws, shown in Table 5 Allowable connection strengths for use in Allowable Strength Design (ASD) for pull-out, pull-over, and shear (bearing) capacity for common sheet steel thicknesses are provided in Tables 2, 3 and 4, respectively, based upon calculations in accordance with AISI S100 Instructions on how to calculate connection design strengths for use in Load and Resistance Factor Design (LRFD) are found in the footnotes of these tables For connections subject to tension, the least of the allowable pull-out, pullover, and tension fastener strength of screws found in Tables 2, 3, and 5, respectively, must be used for design For connections subject to shear, the lesser of the allowable shear (bearing) and fastener strength found in Tables 4 and 5, respectively, must be used for design Connections subject to combined tension and shear loading must be designed in accordance with Section E4 5 of AISI S 100

The values in Tables 2, 3 and 4 are based on a minimum spacing between the centers of fasteners of three times the diameter of the screw, and a minimum distance from the center of a fastener to the edge of any connected part of 1 5 times the diameter of the screw When the distance to the end of the connected part is parallel to the line of the applied force, the allowable connection shear strength determined in accordance with Section E4 3 2 of Appendix A of AISI S100 must be considered

4 2 Installation

Installation of the Hilti Self-drilling Screws must be in accordance with the manufacturer's published installation instructions and this report The manufacturer's published installation instructions must be available at the jobsite at all times during installation

The screws must be installed perpendicular to the work surface using a variable speed screw driving tool set to not exceed 2,500 rpm The screw must penetrate through the supporting steel with a minimum of three threads protruding past the back side of the supporting steel

5 0 CONDITIONS OF USE

The Hilti Self-drilling Screws described in this report comply with, or are suitable alternatives to what is specified in, those codes listed in Section 1 0 of this report, subject to the following conditions

5 1 Fasteners must be installed in accordance with the manufacturer's published installation instructions and this report If there is a conflict between the manufacturer's published installation instructions and this report, this report governs

5 2 The allowable loads specified in Section 4 1 are not to be increased when the fasteners are used to resist wind or seismic forces

5 3 The utilization of the nominal strength values contained in this evaluation report, for the design of cold-formed steel diaphragms, is outside the scope of this report Diaphragms constructed using the Hilti self-drilling screws must be recognized in a current ICC-ES evaluation report based upon the ICC-ES Acceptance Criteria for Steel Deck Roof and Floor Systems (AC43)

5 4 Drawings and calculations verifying compliance with this report and the applicable code must be submitted to the code official for approval The drawings and calculations are to be prepared by a registered design professional when required by the statutes of the jurisdiction in which the project is to be constructed

5 5 The rust-inhibitive (corrosion-resistant) coating on the screws must be suitable for the intended use, as determined by the registered design professional

6 0 EVIDENCE SUBMITTED

Data in accordance with the ICC-ES Acceptance Criteria for Tapping Screw Fasteners (AC118), dated June 2010

7 0 IDENTIFICATION

Hilti Self-drilling Screws are marked with an "H" on the top of the heads, as shown in Figures 1 through 7 Packages of Hilti Self-drilling Screws are labeled with the report holder's name (Hilti, Inc), the fastener type and size, and the evaluation report number (ESR-2196)

8 0 OTHER CODES

8 1 Scope

In addition to the codes listed in Section 1 0, the products described in this report were evaluated for compliance with the requirements of the 2006 *International Building Code*® (2006 IBC) The products comply with the 2006 IBC as noted below

8 2 Uses

See Section 2 0

8 3 Description

See Section 3 0

8 4 Design and Installation

8 4 1 Design

8 4 1 1 General See Section 4 1 1

8 4 1.2 Prescriptive Design The Hilti HWH and HHWH screws, PPH screws, PPCH SD Framer screws and PFTH SD Framer screws described in Sections 3 2, 3 3, 3 7 and 3 8, respectively, are recognized for use where ASTM C 1513 screws of the same size are prescribed in AISI standards referenced in 2006 IBC Section 2210

The Hilti PBH SD screws and PWH SD CMT BD screws described in Sections 3 4 and 3 5, respectively, are recognized for use in fastening gypsum board to cold-formed steel framing 0 033 inch to 0 112 inch (0 8 to 2 8 mm) thick, in accordance with 2006 IBC Section 2506 They are also recognized for use to attaching gypsum board sheathing to cold-formed steel framing as prescribed in Section C2 2 3 of AISI—Lateral, which is referenced in 2006 IBC Section 2210 5

8 4 1 3 Engineered Design The Hilti HWH and HHWH screws, PPH screws, PPCH screws and PFTH screws described in Sections 3 2, 3 3, 3 7 and 3 8, respectively, are recognized for use in engineered connections of cold-formed steel light-framed construction Design of connections must comply with Section E4 of AISI – NAS, using the nominal and allowable fastener tension and shear strengths for the screws, shown in Table 5 Allowable connection strengths for use in Allowable Strength Design (ASD) for pull-out, pull-over, and shear (bearing) capacity for common sheet steel thicknesses are provided in Tables 2, 3 and 4, respectively, based upon calculations in accordance with AISI – NAS Instructions on how to calculate connection design strengths for use in Load and Resistance Factor Design (LRFD) are found in the footnotes of these tables For connections subject to tension, the least of the allowable pull-out, pullover, and tension fastener strength of screws found in Tables 2, 3, and 5, respectively, must be used for design For connections subject to shear, the lesser of the allowable shear (bearing) and fastener strength found in Tables 4 and 5, respectively, must be used for design Connections subject to combined tension and shear loading must be designed in accordance with Section E4 5 of AISI – NAS

8 4 2 Installation. See Section 4 2

8 5 Conditions of Use

See Section 5 0

8 6 Evidence submitted

Data in accordance with the ICC-ES Acceptance Criteria for Tapping Screw Fasteners (AC118), dated November 2009

8 7 Identification

See Section 7 0

TABLE 1—HILTI SELF-DRILLING SCREWS

Description	Designation	Nominal Diameter (in)	Nominal Screw Length (in)	Head Style[1]	Point (Number)	Drilling Capacity (in)		Coating[2]
						Min	Max	
S-MD 10-16 X 5/8 HWH #3	#10-16	0 190	5/8	HWH	3	0 110	0 175	Zinc-1
S-MD 10-16 X 3/4 HWH #3	#10-16	0 190	3/4	HWH	3	0 110	0 175	Zinc-1
S-MD 10-16 X 3/4 HHWH #3	#10-16	0 190	3/4	HHWH	3	0 110	0 175	Zinc-1
S-MD 10-16 X 1 HWH #3	#10-16	0 190	1	HWH	3	0 110	0 175	Zinc-1
S-MD 10-16 X 1 1/4 HWH #3	#10-16	0 190	1 1/4	HWH	3	0 110	0 175	Zinc-1
S-MD 10-16 X 1 1/2 HWH #3	#10-16	0 190	1 1/2	HWH	3	0 110	0 175	Zinc-1
S-MD 12-14 X 3/4 HWH #3	#12-14	0 216	3/4	HWH	3	0 110	0 210	Zinc-1
S-MD 12-14 X 1 HWH #3	#12-14	0 216	1	HWH	3	0 110	0 210	Zinc-1
S-MD 12-14 X 1 1/2 HWH #3	#12-14	0 216	1 1/2	HWH	3	0 110	0 210	Zinc-1
S-MD 12-14 X 2 HWH #3	#12-14	0 216	2	HWH	3	0 110	0 210	Zinc-1
S-MD 1/4-14 X 3/4 HWH #3	1/4-14	0 250	3/4	HWH	3	0 110	0 220	Zinc-1
S-MD1/4-14 X 1 HWH #3	1/4-14	0 250	1	HWH	3	0 110	0 220	Zinc-1
S-MD 1/4-14 X 1 1/2 HWH #3	1/4-14	0 250	1 1/2	HWH	3	0 110	0 220	Zinc-1
S-MD 1/4-14 X 2 HWH #3	1/4-14	0 250	2	HWH	3	0 110	0 220	Zinc-1
S-MD 10-16 X 5/8 PPH #3	#10-16	0 190	5/8	PPH	3	0 110	0 175	Zinc-1
S-MD 10-16 X 3/4 PPH #3	#10-16	0 190	3/4	PPH	3	0 110	0 175	Zinc-1
S-MD 10-16 X 1 PPH #3	#10-16	0 190	1	PPH	3	0 110	0 175	Zinc-1
S-MD 12-24 X 7/8 HWH #4	#12-24	0 216	7/8	HWH	4	0 175	0 250	Zinc-1
S-MD 12-24 X 1 1/4 HWH #4	#12-24	0 216	1 1/4	HWH	4	0 175	0 250	Zinc-1
S-MD 12-24 X 1 1/4 HWH #5	#12-24	0 216	1 1/4	HWH	5	0 250	0 500	Zinc-1
S-MD 12-24 X 1 1/4 HWH #5 Kwik Cote	#12-24	0 216	1 1/4	HWH	5	0 250	0 500	Kwik-Cote
S-MD 12-24 X 1 1/4 HWH #5 Kwik Cote with Bond Washer	#12-24	0 216	1 1/4	HWH	5	0 250	0 500	Kwik-Cote
S-MD 12-24 X 2 HWH #5 Kwik Cote	#12-24	0 216	2	HWH	5	0 250	0 500	Kwik-Cote
S-MD 12-24 X 3 HWH #5 Kwik Cote	#12-24	0 216	3	HWH	5	0 250	0 500	Kwik-Cote
S-MD 10-16 X 7/8 M HWH Collated	#10-16	0 190	7/8	HWH	1	0 028	0 120	Zinc-1
S-MD 12-14 X 1 M HWH Collated	#12-14	0 216	1	HWH	1	0 028	0 120	Zinc-1
S-MD 10-16 X 3/4 M HWH3 Collated	#10-16	0 190	3/4	HWH	3	0 110	0 175	Zinc-1
S-MD 12-24 X 7/8 M HWH4 Collated	#12-24	0 216	7/8	HWH	4	0 175	0 250	Zinc-1
S-MD 10-16 X 7/8 HWH Pilot Point	#10-16	0 190	7/8	HWH	1	0 028	0 120	Zinc-1
S-MD 12-14 X 1 HWH Stitch	#12-14	0 216	1	HWH	1	0 028	0 120	Zinc-1
S-SLC 02 M HWH	#12-14	0 216	1	HWH	1	0 028	0 120	Zinc-1
S-MD 1/4-14 X 7/8 HWH Stitch Kwik Seal	1/4-14	0 250	7/8	HWH	1	0 028	0 140	Kwik-Cote
S-MD 8-18 X 1/2 HWH #2	#8-18	0 164	1/2	HWH	2	0 035	0 100	Zinc-1
S-MD 8-18 X 3/4 HWH #2	#8-18	0 164	3/4	HWH	2	0 035	0 100	Zinc-1
S-MD 8-18 X 1/2 PPH #2	#8-18	0 164	1/2	PPH	2	0 035	0 100	Zinc-1
S-MD 8-18 X 3/4 PPH #2	#8-18	0 164	3/4	PPH	2	0 035	0 100	Zinc-1
S-MD 10-16 X 1/2 HWH #2	#10-16	0 190	1/2	HWH	2	0 035	0 110	Zinc-1

TABLE 1—HILTI SELF-DRILLING SCREWS (Continued)

Description	Designation	Nominal Diameter (in)	Nominal Screw Length (in)	Head Style[1]	Point (Number)	Drilling Capacity (in)		Coating[2]
						Min	Max	
S-MD 10-16 X $^3/_4$ HWH #2	#10-16	0 190	$^3/_4$	HWH	2	0 035	0 110	Zinc-1
S-MD 10-16 X 1 HWH #2	#10-16	0 190	1	HWH	2	0 035	0 110	Zinc-1
S-MD 12-14 x $^3/_4$ HWH #3 Kwik Seal	#12-14	0 216	$^3/_4$	HWH	3	0 110	0 210	Kwik-Cote
S-MD 12-14 x 1 HWH #3 Kwik Seal	#12-14	0 216	1	HWH	3	0 110	0 210	Kwik-Cote
S-MD 12-14 X $1^1/_4$ HWH #3 Kwik Seal	#12-14	0 216	$1^1/_4$	HWH	3	0 110	0 210	Kwik-Cote
S-MD 12-14 X $1^1/_2$ HWH #3 Kwik Seal	#12-14	0 216	$1^1/_2$	HWH	3	0 110	0 210	Kwik-Cote
S-MD 12-14 X 2 HWH #3 Kwik Seal	#12-14	0 216	2	HWH	3	0 110	0 210	Kwik-Cote
S-MD $^1/_4$-14 X $^3/_4$ HWH #3 Kwik Seal	$^1/_4$-14	0 250	$^3/_4$	HWH	3	0 110	0 220	Kwik-Cote
S-MD $^1/_4$-14 x 1 HWH #3 Kwik Seal	$^1/_4$-14	0 250	1	HWH	3	0 110	0 220	Kwik-Cote
S-MD $^1/_4$-14 X $1^1/_2$ HWH #3 Kwik Seal	$^1/_4$-14	0 250	$1^1/_2$	HWH	3	0 110	0 220	Kwik-Cote
6 X 1 PBH SD	#6-20	0 138	1	PBH	1	0 035	0 075	BP
6 X 1 PBH SD Zinc	#6-20	0 138	1	PBH	1	0 035	0 075	Zinc-2
6 X $1^1/_8$ PBH SD	#6-20	0 138	$1^1/_8$	PBH	1	0 035	0 075	BP
6 X $1^1/_8$ PBH SD Zinc	#6-20	0 138	$1^1/_8$	PBH	1	0 035	0 075	Zinc-2
6 X $1^1/_4$ PBH SD	#6-20	0 138	$1^1/_4$	PBH	1	0 035	0 075	BP
6 X $1^1/_4$ PBH SD Zinc	#6-20	0 138	$1^1/_4$	PBH	1	0 035	0 075	Zinc-2
6 X $1^5/_8$ PBH SD	#6-20	0 138	$1^5/_8$	PBH	1	0 035	0 075	BP
6 X $1^5/_8$ PBH SD Zinc	#6-20	0 138	$1^5/_8$	PBH	1	0 035	0 075	Zinc-2
6 X $1^7/_8$ PBH SD	#6-20	0 138	$1^7/_8$	PBH	1	0 035	0 075	BP
6 X $1^7/_8$ PBH SD Zinc	#6-20	0 138	$1^7/_8$	PBH	1	0 035	0 075	Zinc-2
8 X $2^3/_8$ PBH SD	#8-18	0 164	$2^3/_8$	PBH	1	0 035	0 075	BP
8 X $2^3/_8$ PBH SD Zinc	#8-18	0 164	$2^3/_8$	PBH	1	0 035	0 075	Zinc-2
8 X $2^5/_8$ PBH SD	#8-18	0 164	$2^5/_8$	PBH	1	0 035	0 075	BP
8 X $2^5/_8$ PBH SD Zinc	#8-18	0 164	$2^5/_8$	PBH	1	0 035	0 075	Zinc-2
8 X 3 PBH SD	#8-18	0 164	3	PBH	1	0 035	0 075	BP
8 X 3 PBH SD Zinc	#8-18	0 164	3	PBH	1	0 035	0 075	Zinc-2
7 X $^7/_{16}$ PPFH SD Framer	#7-18	0 151	$^7/_{16}$	PPFH	2	0 035	0 100	BP
7 X $^7/_{16}$ PPFH SD Framer Zinc	#7-18	0 151	$^7/_{16}$	PPFH	2	0 035	0 100	Zinc-2
10-16 X $^5/_8$ PPCH SD Framer	#10-16	0 190	$^5/_8$	PPCH	3	0 110	0 175	Zinc-1
10-12 X $^3/_4$ PFTH SD Framer	#10-12	0 190	$^3/_4$	PFTH	3	0 110	0 175	Zinc-1
8 X $1^1/_4$ PWH SD CMT BD	#8-18	0 164	$1^1/_4$	PWH	1	0 035	0 075	Tufcoat
8 X $1^5/_8$ PWH SD CMT BD	#8-18	0 164	$1^5/_8$	PWH	1	0 035	0 075	Tufcoat

For SI 1 inch = 25 4 mm

[1]Refer to Section 3 0 of this report for head configuration abbreviations

[2]For coating abbreviations, BP = Black phosphated per EN ISO 3892, Zinc-1 = ASTM F 1941, Zinc-2 = EN/ISO 4042 A3F, Kwik-Cote = Proprietary organic zinc coating, Tufcoat = Tufcoat forest green similar to ISO 10683

TABLE 2—ALLOWABLE TENSILE PULL-OUT LOADS (P_{NOT}/Ω), pounds-force [1,2,3,4,5]

Steel F_u = 45 ksi Applied Factor of Safety, Ω = 3 0								
Screw Designation	Nominal Diameter (in)	Design thickness of member not in contact with the screw head (in)						
		0 036	0 048	0 060	0 075	0 090	0 105	0 135
#6-20	0 138	63	84	106	132	158	185	238
#8-18	0 164	75	100	125	157	188	220	282
#10-12, #10-16	0 190	87	116	145	182	218	254	327
#12-14, #12-24	0 216	99	132	165	207	248	289	373
$^1/_4$-14	0 250	115	153	191	239	287	333	430

For **SI** 1 inch = 25 4 mm, 1 lbf = 4 4 N, 1 ksi = 6 89 MPa

[1]For tension connections, the lower of the allowable pull-out, pullover, and tension fastener strength of screw found in Tables 2, 3, and 5, respectively must be used for design

[2]ANSI/ASME standard screw diameters were used in the calculations and are listed in the tables

[3]The allowable pull-out capacity for other member thicknesses can be determined by interpolating within the table

[4]To calculate LRFD values, multiply values in table by the ASD safety factor of 3 0 and multiply again with the LRFD Φ factor of 0 5

[5]For $F_u \geq 65$ ksi steel, multiply values by 1 44

TABLE 3—ALLOWABLE TENSILE PULL-OVER LOADS (P_{NOV}/Ω), pounds-force [1,2,3,4,5]

Steel F_u = 45 ksi Applied Factor of Safety, Ω = 3 0									
Screw Designation	Washer or Head Diameter (in)	Design thickness of member in contact with the screw head (in)							
		0 030	0 036	0 048	0 060	0 075	0 090	0 105	0 135
Hex Washer Head (HWH) or High Hex Washer Head (HHWH)									
#8-18	0 335	225	271	363	453	567	680	790	1020
#10-16	0 399	268	323	430	540	673	807	943	1210
#12-14, #12-24	0 415	279	337	447	560	700	840	980	1260
$^1/_4$-14	0 500	336	407	540	677	843	1010	1180	1520
Phillips Pan Head (PPH)									
#8-18	0 311	210	252	336	420	525	630	735	945
#10-16	0 364	246	295	393	491	614	737	860	1106
Phillips Truss Head (PTH)									
#8-18	0 433	292	351	468	565	731	877	1023	1315
Phillips Pan Framing Head (PPFH)									
#7-18	0 303	205	245	327	409	511	614	716	920
Phillips Pancake Head (PPCH)									
#10-16	0 409	276	331	442	552	690	828	966	1242
Phillips Flat Truss Head (PFTH)									
#10-12	0 364	246	295	393	491	614	737	860	1106

For **SI** 1 inch = 25 4 mm, 1 lbf = 4 4 N, 1 ksi = 6 89 MPa

[1]For tension connections, the lower of the allowable pull-out, pullover, and tension fastener strength of screw found in Tables 2, 3, and 5, respectively must be used for design

[2]ANSI/ASME standard screw head diameters were used in the calculations and are listed in the tables

[3]The allowable pull-over capacity for other member thicknesses can be determined by interpolating within the table

[4]To calculate LRFD values, multiply values in table by the ASD safety factor of 3 0 and multiply again with the LRFD Φ factor of 0 5

[5]For $F_u \geq 65$ ksi steel, multiply values by 1 44

TABLE 4—ALLOWABLE SHEAR (BEARING) CAPACITY OF SCREW CONNECTIONS OF COLD-FORMED STEEL, lb [1,2,3,4,5]

Steel F_u = 45 ksi Applied Factor of Safety, Ω = 3 0									
Screw Designation	Nominal Diameter (in)	Design thickness of member in contact with screw head, (in)	Design thickness of member not in contact with the screw head (in)						
			0 036	0 048	0 060	0 075	0 090	0 105	0 135
#8-18	0 164	0 036	174	239	239	239	239	239	239
		0 048	174	268	319	319	319	319	319
		0 060	174	268	373	400	400	400	400
		0 075	174	268	373	497	497	497	497
		0 090	174	268	373	497	597	597	597
		0 105	174	268	373	497	597	697	697
		0 135	174	268	373	497	597	697	897
#10-12 #10-16	0 190	0 036	188	277	277	277	277	277	277
		0 048	188	289	370	370	370	370	370
		0 060	188	289	403	463	463	463	463
		0 075	188	289	403	563	577	577	577
		0 090	188	289	403	563	693	693	693
		0 105	188	289	403	563	693	807	807
		0 135	188	289	403	563	693	807	1040
#12-14 #12-24	0 216	0 036	200	309	315	315	315	315	315
		0 048	200	308	420	420	420	420	420
		0 060	200	308	430	523	523	523	523
		0 075	200	308	430	600	657	657	657
		0 090	200	308	430	600	787	787	787
		0 105	200	308	430	600	787	920	920
		0 135	200	308	430	600	787	920	1180
$^1/_4$-14	0 250	0 036	215	340	363	363	363	363	363
		0 048	215	331	467	487	487	487	487
		0 060	215	331	463	607	607	607	607
		0 075	215	331	463	647	760	760	760
		0 090	215	331	463	647	850	910	910
		0 105	215	331	463	647	850	1060	1060
		0 135	215	331	463	647	850	1060	1370

For SI 1 inch = 25 4 mm, 1 lbf = 4 4 N, 1 ksi = 6 89 MPa

[1]The lower of the allowable shear (bearing) and the allowable fastener shear strength found in Tables 4 and 5, respectively must be used for design

[2]ANSI/ASME standard screw diameters were used in the calculations and are listed in the tables

[3]The allowable bearing capacity for other member thicknesses can be determined by interpolating within the table

[4]To calculate LRFD values, multiply values in table by the ASD safety factor of 3 0 and multiply again with the LRFD Φ factor of 0 5

[5]For $F_u \geq 65$ ksi steel, multiply values by 1 44

TABLE 5—FASTENER STRENGTH OF SCREW

SCREW DESIGNATION	DIAMETER (IN)	NOMINAL FASTENER STRENGTH DETERMINED BY TESTING		ALLOWABLE FASTENER STRENGTH[4]	
		Tension, P_{ts} (lb)	Shear, P_{ss} (lb)	Tension (P_{ts}/Ω)[1] (lb)	Shear (P_{ss}/Ω)[2,3] (lb)
#6-20	0 138	1000	890	335	295
#7-18	0 151	1000	890	335	295
#8-18	0 164	1000	1170	335	390
#10-12	0 190	2170	1645	720	550
#10-16	0 190	1370	1215	455	405
#12-14	0 216	2325	1880	775	625
#12-24	0 216	3900	2285	1300	760
$^1/_4$-14	0 250	4580	2440	1525	815

For SI 1 inch = 25 4 mm, 1 lbf = 4 4 N, 1 ksi = 6 89 MPa

[1]For tension connections, the lower of the allowable pull-out, pullover, and tension fastener strength of screw found in Tables 2, 3, and 5, respectively must be used for design
[2]For shear connections, the lower of the allowable shear (bearing) and the allowable fastener shear strength found in Tables 4 and 5, respectively must be used for design
[3]See Sections 4 1 3 and 8 4 1 3, as applicable, for fastener spacing and end distance requirements
[4]To calculate LRFD values, multiply the nominal fastener strengths by the LRFD Φ factor of 0 5

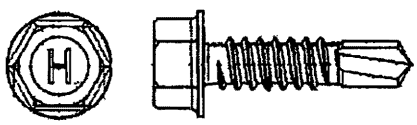

FIGURE 1—HEX WASHER HEAD (HWH) AND HIGH HEX WASHER HEAD (HHWH) SCREW

FIGURE 2—PHILLIPS PAN HEAD (PPH) SCREW

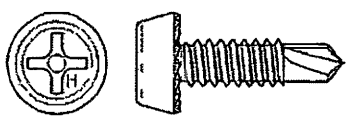

FIGURE 3—PHILLIPS PAN FRAMING HEAD (PPFH) SCREW

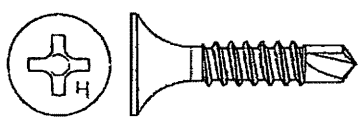

FIGURE 4—PHILLIPS BUGLE HEAD (PBH) SCREW

FIGURE 5—PHILLIPS WAFER HEAD (PWH) SCREW

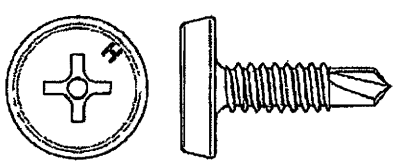

FIGURE 6—PHILLIPS PANCAKE HEAD (PPCH) SCREW

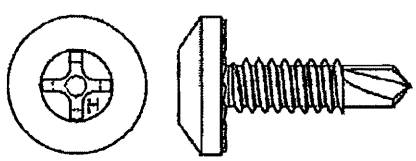

FIGURE 7—PHILLIPS FLAT TRUSS HEAD (PFTH) SCREW

ICC-ES Evaluation Report

ESR-2196 Supplement

Reissued October 1, 2011
This report is subject to renewal in two years

www.icc-es.org | (800) 423-6587 | (562) 699-0543 *A Subsidiary of the International Code Council®*

DIVISION 05 00 00—METALS
Section 05 05 23—Metal Fastenings

DIVISION 06 00 00—WOOD, PLASTICS AND COMPOSITES
Section 06 05 23—Wood, Plastic and Composite Fastenings

DIVISION 09 00 00—FINISHES
Section 09 29 10—Gypsum Board Accessories

REPORT HOLDER

HILTI, INC
5400 SOUTH 122ND EAST AVENUE
TULSA, OKLAHOMA 74146
(800) 879-8000
www.us.hilti.com
HNATechnicalServices@hilti.com

EVALUATION SUBJECT

HILTI SELF-DRILLING SCREWS

1.0 EVALUATION SCOPE

Compliance with the following codes

- 2007 *Florida Building Code—Building*
- 2007 *Florida Building Code—Residential*

Property evaluated

Structural

2.0 PURPOSE OF THIS SUPPLEMENT

This supplement is issued to indicate that the Hilti Self-drilling Screws described in Sections 2.0 through 7.0 of the master report comply with the 2007 *Florida Building Code—Building* and the 2007 *Florida Building Code—Residential* when designed and installed in accordance with the master evaluation report.

For products falling under Florida Rule 9B-72, verification that the report holder's quality assurance program is audited by a quality assurance entity approved by the Florida Building Commission for the type of inspections being conducted is the responsibility of an approved validation entity (or the code official when the report holder does not possess an approval by the Commission).

This supplement expires concurrently with the master report issued October 1, 2011.

ICC-ES Evaluation Reports are not to be construed as representing aesthetics or any other attributes not specifically addressed, nor are they to be construed as an endorsement of the subject of the report or a recommendation for its use. There is no warranty by ICC Evaluation Service, LLC, express or implied, as to any finding or other matter in this report, or as to any product covered by the report.

Copyright © 2011