KGA

STRUCTURAL CALCULATIONS

PORTLAND INTERNATIONAL AIRPORT

DEICING ENHANCEMENTS

Stairs, Platforms and Guard Rails

Portland, Oregon

For

J. E. Dunn Construction

September 1, 2010

ALL COMPUTATION AND STRUCTURAL ENGINEERING FOR THIS PROJECT HAVE BEEN PERFORMED BY MYSELF OR UNDER MY DIRECT SUPERVISION.

STRUCTURAL REGISTERED PROFESSIONAL ENGINEER 11722 OREGON JULY 16 1982 PAUL E. KLUVERS

8/12/11

EXPIRATION DATE 6/30/13

Reviewed for Conformance to Design Drawings on 9/3/10

STRUCTURAL REGISTERED PROFESSIONAL ENGINEER 10808 OREGON JOSEPH C GEHLEN

9/1/10

EXPIRES. 6-30-2011

J. E. Dunn Construction Company
This submittal has been reviewed by the undersigned for conformance with contract documents. Sub-contractor is responsible for correlation of plans / specs and to verify dimensions, is accuracy.
Signature: [illegible] Date 9/3/10
Signed: [illegible] Date [illegible]

KRAMER GEHLEN & ASSOCIATES, INC.
CONSULTING ENGINEERS
400 Columbia Street, Suite 240
Vancouver, Washington 98660-3413
(360) 693-1621 (503) 289-2661
Fax: (360) 696-1572

Project Summary:

Title: Portland Airport Deicing Platforms and Stairs
KGA Project No 10-181
Client J E. Dunn Construction

Description:

This project consists of the design of several steel framed stairs The stairs utilize steel channels as the stringers and landing members and steel grating for the treads and landing The base of the stringers are slotted to allow for differential movement of the levels above and below the stair except at the Treatment Room to Mezzanine stair where it is a fixed connection. This stair utilizes a switchback to accommodate differential movement between levels The stairs utilize connections to the main building and cantilevered steel columns to resist seismic forces
This project also consists of the design of a multilevel platform for maintenance of several stainless steel storage tanks The platforms are steel framed and have tolerance built in for lateral differential movements between the tanks The stairs on the platform have slotted connections at the base of the stringers and there are slotted connections to seismically isolate some tanks relative to movement from the other tanks. The platforms are seismically isolated from the main building with seismic gaps All the concrete anchorage utilizes stainless steel expansion anchors approved for use in cracked concrete and the masonry anchorage utilizes galvanized screw anchors or epoxy anchors.

Table of Contents:

Design Criteria:	DC-1
Treatment Room To Mezz Stair	ST-1 through ST-12
GRV Storage To Mezz Stair	ST-13 through ST-26
Pump Station Stair	ST-27 through ST-36
Reactor Pit Stair	ST-37 through ST-39
Stair Connection Design	ST-40 through ST-41
Tank Platform Design	TPF-1 through TPF-55
Caustic Tank Supports	CT-1 through CT-7
Guardrail Design	GR-1 through GR-5

DESIGN CRITERIA

PROJECT NAME PDX DEICING PLATFORMS AND STAIRS

PROJECT NUMBER 10101 DATE 9/1/2010

A Telephone memorandum with Building Department (If required) _____

1 Person with whom you spoke _____

Telephone no _____

2 Code, year, amendments 2009 IBC w/ OR AMEND.

3 Roof load N/A

4 Wind speed and exposure N/A

5 Seismic design category D

6 Amount of snow load included in seismic mass _____

6 Frost depth N/A

B Soil bearing

1 Foundation type _____

a Soil bearing _____

b Pile capacity _____

2 Seismic

a I, I_P, I_W I

b R R= 3.5 @ STAIRS, R=3 PLATFORM

c S_s S_S = 1.04

d S_1 S_1 = .34

e Site soil class D

3 Floor live loads

a Typical floors 40 PSF @ PLATFORM

b Mezzanines _____

c Special Floors _____

d 100 PSF STAIRS

4 Deflection criteria

a Roof _____

b Floor _____

c Wall _____

5 Special considerations

a Special dead load criteria _____

b Future expansions _____

c _____

6 Other _____

Revised March 17, 2005

TREATMENT ROOM TO MEZZ. STAIR –

DL = 10PSF + SELF WT
LL = 100 PSF

SEISMIC DESIGN – $S_{DS} = .77$ (PER STRUCT. DRWGS)

$$F_p = \frac{.4(2.5)(.77)W}{(3.5/1.0)}\left(1+2\left(\frac{14}{26}\right)\right) = .46W \text{ @ STRUCTURE}$$

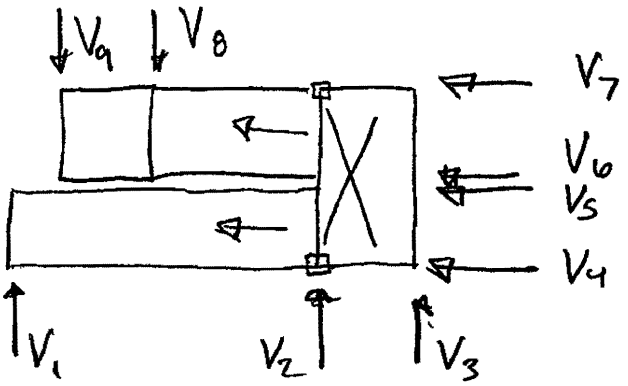

$V_7 = (4(4)(10) + 12(2)(10) + 12(30) + 12(12))(.46) = 418^{\#}$

$V_8 = (6(10)(4) + 6(30)(2) + 2(4)(10) + 12(8))(.46) = 357^{\#}$

$V_9 = (4(2)(10) + 8(12))(.46) = 81^{\#}$

$V_1 = (8(2)(30) + 3.33(8)(10))(.46) = 313^{\#}$

$V_2 = V_1 + (8(2)(10) + 11.5(8+4) + 4(6)(10) + 6(2)(30))(.46) = 756^{\#}$

$V_3 = (8(2)(10) + 11.5(8+4))(.46) = 138^{\#}$

$V_4 = (1.66(19)(10) + 16(30) + 5(12) + (10)(4)(2))(.46) = 431^{\#}$

$V_5 = ((1.66)(16)(10) + 16(30))(.46) = 344^{\#}$

$V_6 = ((\frac{1}{2})(12)(10) + 12(30))(.46) = 270^{\#}$

KRAMER GEHLEN ASSOCIATES

PROJECT PDX DEICING PLATFORM STAIRS
CLIENT JE DUNN CONSTRUCTION

CONSULTING ENGINEERS – STRUCTURAL/CIVIL
400 Columbia St 360 / 693-1621
Suite 240 503 / 289-2661
Vancouver, WA Fax 360 / 696-1572
98660-3413 www.kga.cc

DATE	DESIGN
8/11/10	JB
PROJECT NO	SHEET
10181-00	ST-1

	GRV Storage to Mezz Stairs	
JB		Sept 1, 2010 at 3 04 PM
10-181		Treatment Room to Mezz Stairs W

ST-2

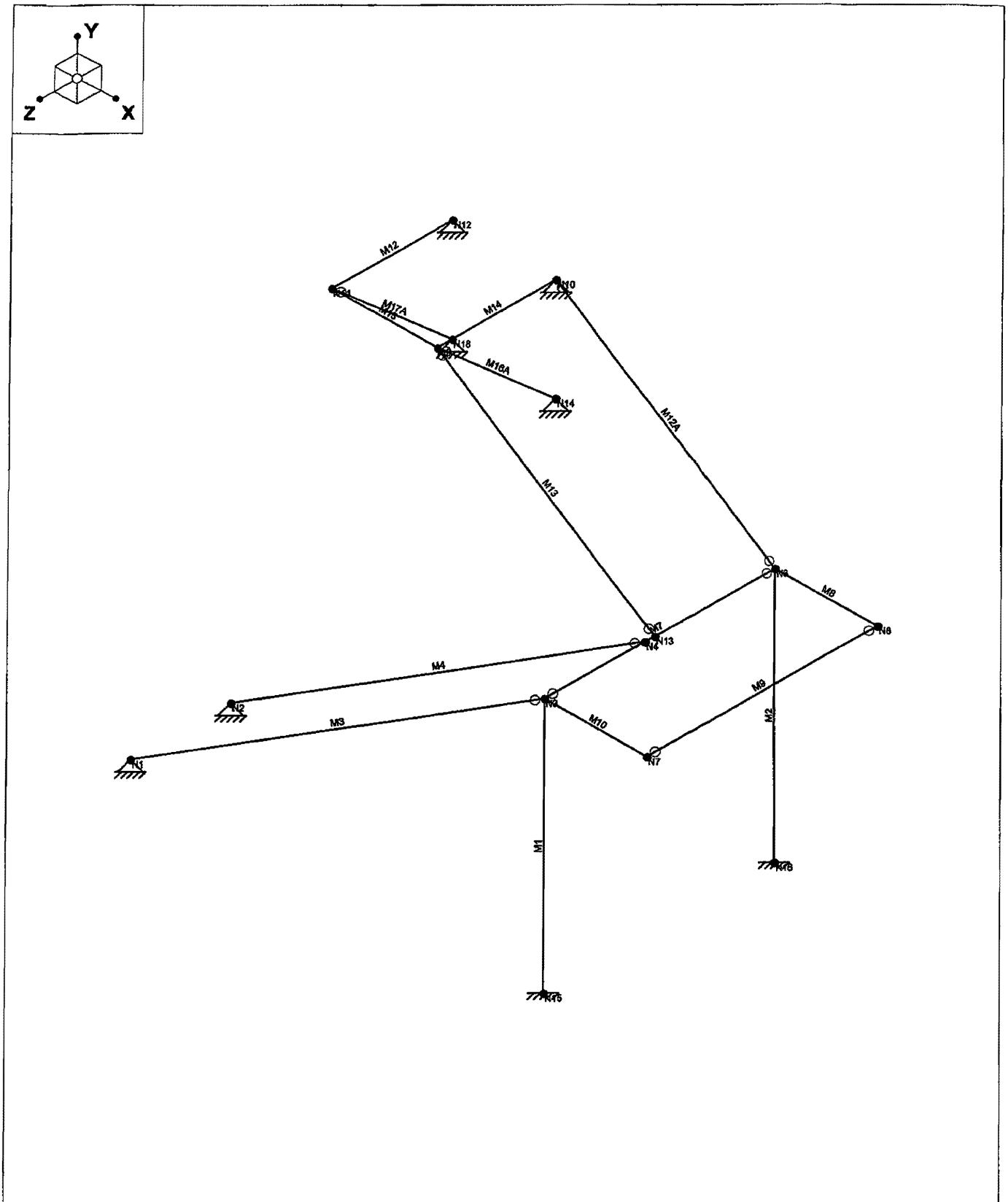

	GRV Storage to Mezz Stairs	
JB		Sept 1, 2010 at 3 04 PM
10-181		Treatment Room to Mezz Stairs W

ST-3

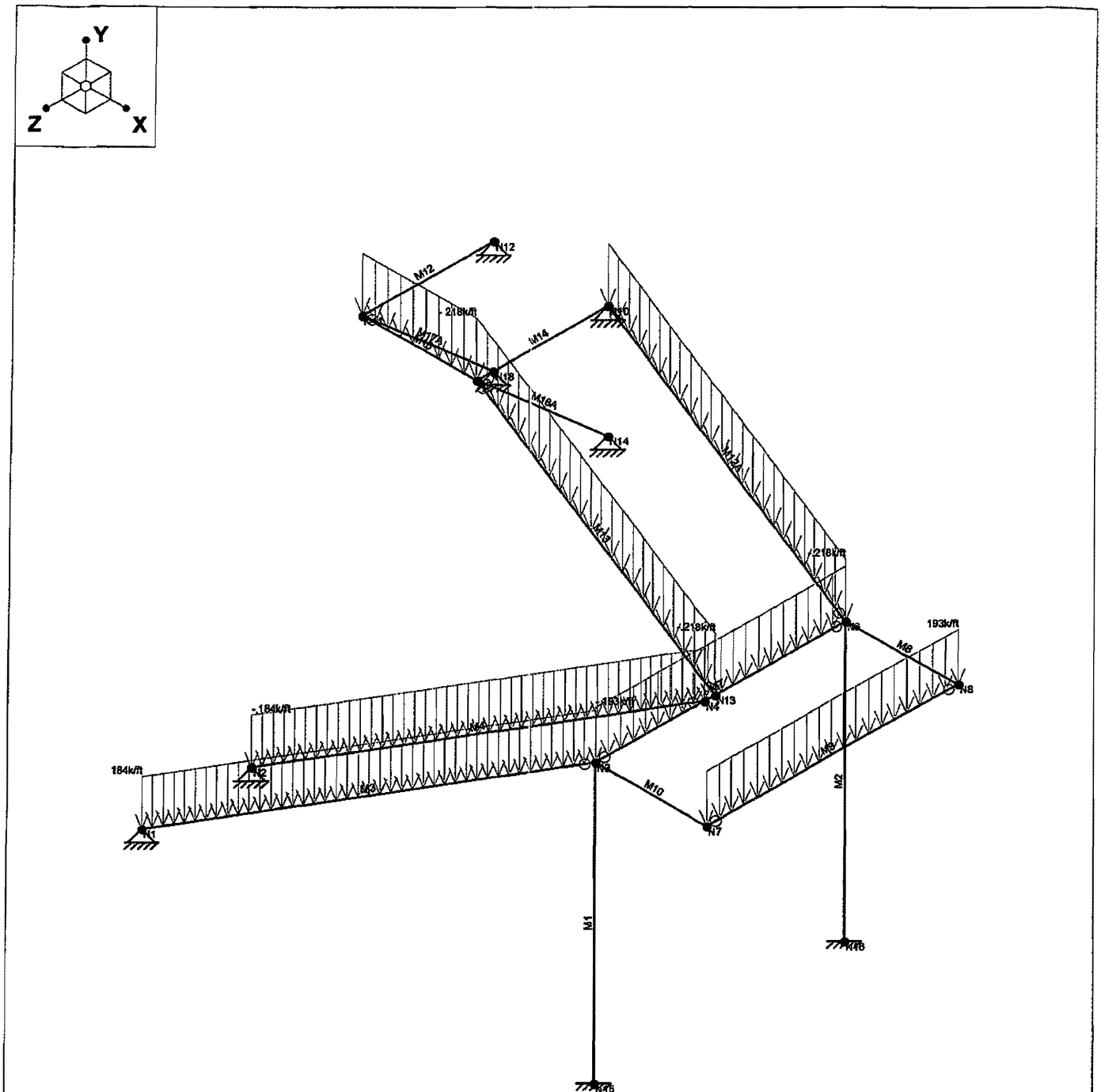

Loads: LC 7 DL+LL

	GRV Storage to Mezz Stairs	
JB		Sept 1, 2010 at 3 04 PM
10-181		Treatment Room to Mezz Stairs W

ST-4

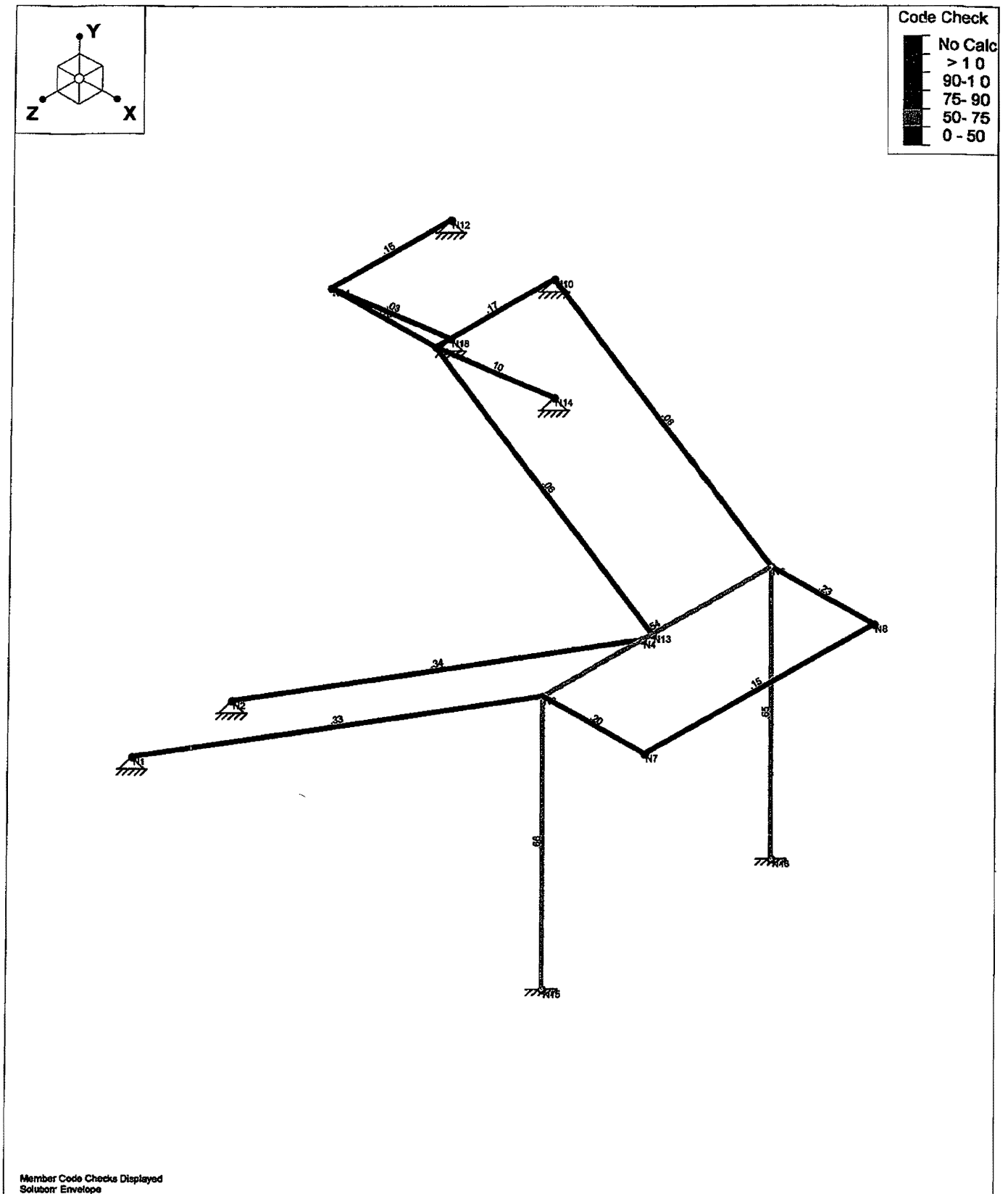

Member Code Checks Displayed
Solution Envelope

	GRV Storage to Mezz Stairs	
JB		Sept 1, 2010 at 3 04 PM
10-181		Treatment Room to Mezz Stairs W

ST-5

Basic Load Cases

	BLC Description	Category	X Gravity	Y Gravity	Z Gravity	Joint	Point	Distributed	Area (Me	Surface (
1	DL	DL		-1				7		
2	LL	LL						7		
3	ELx	ELX				4				
4	ELz	ELZ				4				

Joint Boundary Conditions

	Joint Label	X [k/in]	Y [k/in]	Z [k/in]	X Rot [k-ft/rad]	Y Rot [k-ft/rad]	Z Rot [k-ft/rad]	Footing
1	N1	Reaction	Reaction	Reaction				
2	N2	Reaction	Reaction	Reaction				
3	N15	Reaction	Reaction	Reaction	Reaction	Reaction	Reaction	
4	N16	Reaction	Reaction	Reaction	Reaction	Reaction	Reaction	
5	N10	Reaction	Reaction	Reaction				
6	N12	Reaction	Reaction	Reaction				
7	N14	Reaction	Reaction	Reaction				
8	N18	Reaction	Reaction	Reaction				

Hot Rolled Steel Design Parameters

	Label	Shape	Length	Lbyy[ft]	Lbzz[ft]	Lcomp to	Lcomp bo	Kyy	Kzz	Cm-yy	Cm-zz	Cb	y sway	z sway	Function
1	M1	COLUMN	8 666												Lateral
2	M2	COLUMN	8.666												Lateral
3	M3	STRING	16 253												Lateral
4	M4	STRING	16 253												Lateral
5	M7	LANDING	7 666			Segment	Segment								Lateral
6	M8	LANDING	3 416												Lateral
7	M9	LANDING	7 666												Lateral
8	M10	LANDING	3 416												Lateral
9	M12	LANDING	4												Lateral
10	M12A	STRING	8 783												Lateral
11	M13	STRING	8 783												Lateral
12	M14	LANDING	4												Lateral
13	M15	LANDING	3 5												Lateral
14	M16A	BRACE	5.315												Lateral
15	M17A	BRACE	5 315												Lateral

Envelope AISC ASD Steel Code Checks

	Member	Shape	Code C	Loc[ft]	LC	Shear C	Loc[ft]	Dir	LC	Fa [ksi]	Ft [ksi]	Fb y-y [	Fb z-z [	Cb	Cmy	Cmz	ASD Eqn
1	M1	HSS3X3X4	659	0	5	037	0	z	1	15 653	27 6	30 36	30 36	2 3	6	403	H1-2
2	M2	HSS3X3X4	651	0	5	035	0	z	1	15 653	27 6	30.36	30 36	2 3	583	4	H1-2
3	M3	C12X30	326	8 127	7	017	16 253	y	7	2 288	21 6	27	8 143	1	6	1	H1-3
4	M4	C12X30	341	7 619	7	017	16 253	y	7	2 288	21 6	27	8 143	1	6	1	H1-3
5	M7	C8X11 5	545	3 354	7	087	0	y	7	6 891	21 6	27	21 6	1	6	1	H2-1
6	M8	C8X11 5	231	0	5	032	0	y	7	16 88	21 6	27	21 6	1	6	85	H1-2
7	M9	C8X11 5	154	3 833	7	031	7 666	y	7	6 891	21 6	27	14 372	1	6	1	H1-3
8	M10	C8X11 5	205	3 416	5	032	3 416	y	7	16 88	21 6	27	21 6	1	6	85	H2-1
9	M12	C8X11 5	154	0	7	003	0	z	7	15 707	21 6	27	21 6	1	6	85	H2-1
10	M12A	C12X30	059	4 391	7	065	0	y	3	7 834	21 6	27	15 069	1	6	1	H1-3
11	M13	C12X30	059	4 392	7	011	0	y	7	7 834	21 6	27	15 068	1	6	1	H1-3
12	M14	C8X11 5	169	0	7	003	0	z	5	15 707	21 6	27	21 6	1	592	85	H2-1
13	M15	C8X11 5	147	3 5	7	016	0	y	7	16 717	21 6	27	21 6	1	201	85	H2-1
14	M16A	L3X3X6	099	5 315	7	001	5 315	y	5	11 852	21 6	- Code					H1-1
15	M17A	L3X3X6	027	5 315	7	001	5 315	y	7	11 852	21 6	- Code					H1-1

Envelope Joint Reactions

	Joint		X [k]	LC	Y [k]	LC	Z [k]	LC	MX [k-ft]	LC	MY [k-ft]	LC	MZ [k-ft]	LC
1	N1	max	243	2	1 396	7	0	1	0	1	0	1	0	1
2		min	- 537	7	197	1	0	7	0	1	0	1	0	1
3	N2	max	501	6	1 883	7	0	1	0	1	0	1	0	1
4		min	049	1	263	1	0	7	0	1	0	1	0	1
5	N15	max	472	7	5 17	7	0	7	006	7	135	1	- 132	1
6		min	046	1	315	2	- 304	1	-2 631	1	- 002	7	-1 351	7
7	N16	max	474	7	3 595	7	0	2	002	7	124	1	- 134	1
8		min	046	1	43	1	- 322	3	-2 685	1	-.003	7	-1 368	7
9	N10	max	249	2	1 449	7	- 207	2	0	1	0	1	0	1
10		min	- 579	7	- 025	2	-1 705	7	0	1	0	1	0	1
11	N12	max	- 002	2	023	3	- 069	2	0	1	0	1	0	1
12		min	- 064	7	014	2	- 653	7	0	1	0	1	0	1
13	N14	max	0	2	1 639	7	1 851	7	0	1	0	1	0	1
14		min	0	7	197	2	212	2	0	1	0	1	0	1
15	N18	max	0	7	463	7	507	7	0	1	0	1	0	1
16		min	0	5	068	1	064	1	0	1	0	1	0	1
17	Totals	max	1 028	4	15.619	7	0	2						
18		min	0	7	1 996	2	- 932	3						

Envelope Joint Displacements

	Joint		X [in]	LC	Y [in]	LC	Z [in]	LC	X Rotation .	LC	Y Rotation .	LC	Z Rotation [.	LC
1	N18	max	0	5	0	1	0	1	1 66e-4	7	1 145e-3	7	3 644e-6	2
2		min	0	7	0	7	0	7	8 991e-5	2	-2 442e-6	2	-6 607e-4	7
3	N16	max	0	1	0	1	0	3	0	1	0	7	0	7
4		min	0	7	0	7	0	2	0	7	0	1	0	1
5	N15	max	0	1	0	2	0	1	0	1	0	7	0	7
6		min	0	7	0	7	0	7	0	7	0	1	0	1
7	N14	max	0	7	0	2	0	2	2 117e-4	7	1 21e-3	7	9 704e-6	2
8		min	0	2	0	7	0	7	9 518e-5	2	2 88e-6	2	-5 872e-4	7
9	N13	max	044	7	- 004	2	1 304	1	-4 129e-6	1	2 351e-4	6	-9 578e-4	2
10		min	001	2	- 072	7	- 003	7	-5.213e-5	7	3 693e-5	1	-9 845e-3	7
11	N12	max	0	7	0	2	0	7	3 446e-5	7	2 472e-3	7	-1 405e-5	2
12		min	0	2	0	3	0	2	6 422e-6	2	8 458e-5	2	-1 438e-4	7
13	N11	max	088	7	0	2	0	7	2 533e-5	7	5 539e-4	7	-1 405e-5	2
14		min	-003	2	- 001	7	0	2	8 401e-7	2	1 778e-5	2	-1 438e-4	7
15	N10	max	0	7	0	2	0	7	1 083e-4	5	2 451e-3	7	-4 416e-6	2
16		min	0	2	0	7	0	2	1 461e-5	2	-4 647e-5	1	-2 016e-5	5
17	N9	max	088	7	0	2	0	7	9 565e-5	7	5 601e-4	7	-4 416e-6	2
18		min	003	2	- 005	7	0	2	5 481e-6	1	1 902e-5	2	-2 016e-5	5
19	N8	max	0	1	- 042	2	1 451	1	1 84e-2	1	5 008e-5	7	-1 019e-3	2
20		min	- 003	7	- 428	7	- 005	7	-6 687e-5	7	-3 979e-3	1	-1 049e-2	7
21	N7	max	005	7	- 042	2	1 451	1	1 878e-2	1	5 883e-5	7	-1 029e-3	2
22		min	0	2	- 435	7	- 005	7	-4 e-5	7	-3 859e-3	1	-1 061e-2	7
23	N6	max	0	1	0	1	1 305	1	1 84e-2	1	6 334e-5	7	-9 53e-4	2
24		min	- 003	7	- 005	7	- 003	7	-6 687e-5	7	-2 729e-3	1	-9 783e-3	7
25	N4	max	044	7	- 003	2	1 304	1	-2 404e-5	2	1 343e-4	2	-9 583e-4	2
26		min	002	2	- 071	7	- 003	7	-3.69e-4	7	-6 376e-5	7	-9 851e-3	7
27	N3	max	005	7	0	2	1 304	1	1 878e-2	1	4 557e-5	7	-9 623e-4	2
28		min	0	2	-.008	7	- 003	7	-4 e-5	7	-2 989e-3	1	-9 903e-3	7
29	N2	max	0	1	0	1	0	7	3 543e-3	1	2 767e-5	2	-1 526e-4	2
30		min	0	6	0	7	0	1	-3 005e-4	7	-5 686e-3	3	-1 426e-3	7
31	N1	max	0	7	0	1	0	7	1 566e-2	1	1 964e-3	3	-1 35e-4	2
32		min	0	2	0	7	0	1	-1 567e-5	7	1 867e-7	2	-1 044e-3	7

Joint Coordinates and Temperatures

	Label	X [ft]	Y [ft]	Z [ft]	Temp [F]	Detach From Dia.
1	N18	2 917	10	-7 666	0	
2	N16	13 75	0	-7 666	0	
3	N15	13 75	0	0	0	
4	N14	6 417	10	-7 666	0	
5	N13	13 75	8 666	-3 666	0	
6	N12	2 917	13 5	-7 666	0	
7	N11	2 9167	13 5	-3 666	0	
8	N10	6 417	13 5	-7.666	0	
9	N9	6 4167	13 5	-3 666	0	
10	N8	17 166	8 666	-7 666	0	
11	N7	17 166	8 666	0	0	
12	N6	13 75	8 666	-7 666	0	
13	N4	13 75	8 666	-3 33	0	
14	N3	13 75	8 666	0	0	
15	N2	0	0	-3 33	0	
16	N1	0	0	0	0	

Member Distributed Loads (BLC 1 : DL)

	Member Label	Direction	Start Magnitude[k/ft,d	End Magnitude[k/ft,d	Start Location[ft,%]	End Location[ft,%]
1	M7	Y	- 018	- 018	0	0
2	M9	Y	- 018	- 018	0	0
3	M3	Y	- 018	- 018	0	0
4	M4	Y	- 018	- 018	0	0
5	M13	Y	- 018	- 018	0	0
6	M12A	Y	- 018	- 018	0	0
7	M15	Y	- 018	- 018	0	0

Member Distributed Loads (BLC 2 : LL)

	Member Label	Direction	Start Magnitude[k/ft,d	End Magnitude[k/ft,d	Start Location[ft,%]	End Location[ft,%]
1	M9	Y	- 175	- 175	0	0
2	M7	Y	- 175	- 175	0	0
3	M3	Y	- 166	- 166	0	0
4	M4	Y	- 166	- 166	0	0
5	M13	Y	- 2	- 2	0	0
6	M12A	Y	- 2	- 2	0	0
7	M15	Y	- 2	- 2	0	0

Joint Loads and Enforced Displacements (BLC 3 : ELx)

	Joint Label	L,D,M	Direction	Magnitude[(k,k-ft), (in,rad), (k*s^2/ft.
1	N7	L	X	- 431
2	N8	L	X	- 418
3	N4	L	X	- 344
4	N13	L	X	- 276

Joint Loads and Enforced Displacements (BLC 4 : ELz)

	Joint Label	L,D,M	Direction	Magnitude[(k,k-ft), (in,rad), (k*s^2/ft
1	N6	L	Z	756
2	N8	L	Z	138
3	N11	L	Z	081
4	N9	L	Z	357

Hot Rolled Steel Properties

	Label	E [ksi]	G [ksi]	Nu	Therm (\1E5 F)	Density[k/ft^3]	Yield[ksi]
1	A36 Gr 36	29000	11154	3	65	49	36
2	A572 Gr 50	29000	11154	.3	65	49	50
3	A992	29000	11154	3	65	49	50
4	A500 Gr 42	29000	11154	3	65	49	42
5	A500 Gr 46	29000	11154	3	65	49	46

Member Primary Data

	Label	I Joint	J Joint	K Joint	Rotate(deg)	Section/Shape	Type	Design List	Material	Design Rules
1	M1	N15	N3			COLUMN	Column	SquareTube	A500 Gr 46	Typical
2	M2	N16	N6			COLUMN	Column	SquareTube	A500 Gr 46	Typical
3	M3	N1	N3			STRINGER	Beam	Channel	A36 Gr 36	Typical
4	M4	N2	N4		180	STRINGER	Beam	Channel	A36 Gr 36	Typical
5	M7	N3	N6			LANDING	Beam	Channel	A36 Gr 36	Typical
6	M8	N6	N8			LANDING	Beam	Channel	A36 Gr 36	Typical
7	M9	N8	N7			LANDING	Beam	Channel	A36 Gr 36	Typical
8	M10	N7	N3			LANDING	Beam	Channel	A36 Gr 36	Typical
9	M12	N11	N12			LANDING	Beam	Channel	A36 Gr 36	Typical
10	M12A	N6	N10			STRINGER	Beam	Channel	A36 Gr 36	Typical
11	M13	N13	N9			STRINGER	Beam	Channel	A36 Gr 36	Typical
12	M14	N9	N10			LANDING	Beam	Channel	A36 Gr 36	Typical
13	M15	N9	N11			LANDING	Beam	Channel	A36 Gr 36	Typical
14	M16A	N9	N14			BRACE	VBrace	Single Angle	A36 Gr 36	Typical
15	M17A	N11	N18			BRACE	VBrace	Single Angle	A36 Gr 36	Typical

Envelope Member Section Forces

	Member	Sec		Axial[k]	LC	y Shear[k]	LC	z Shear[k]	LC	Torque[k-ft]	LC	y-y Mome	LC	z-z Moment[k-ft]	LC
1	M1	1	max	5 17	7	- 046	1	0	7	135	1	2 631	1	- 132	1
2			min	315	2	- 472	7	-.304	1	- 002	7	- 006	7	-1 351	7
3		2	max	5 152	7	- 046	1	0	7	135	1	1 973	1	- 032	1
4			min	.305	2	- 472	7	- 304	1	- 002	7	- 004	7	- 329	7
5		3	max	5 134	7	- 046	1	0	7	135	1	1 315	1	694	7
6			min	294	2	- 472	7	- 304	1	- 002	7	- 003	7	067	2
7		4	max	5 116	7	- 046	1	0	7	135	1	658	1	1 716	7
8			min	283	2	-.472	7	- 304	1	- 002	7	- 001	7	168	2
9		5	max	5 099	7	- 046	1	0	7	135	1	0	1	2 738	7
10			min	272	2	- 472	7	- 304	1	- 002	7	0	1	268	1
11	M2	1	max	3 595	7	- 046	1	0	2	124	1	2 685	1	- 134	1
12			min	43	1	- 474	7	- 322	3	- 003	7	- 002	7	-1 368	7
13		2	max	3 577	7	- 046	1	0	2	124	1	1 987	1	- 034	1
14			min	419	1	- 474	7	- 322	3	- 003	7	- 003	7	- 341	7
15		3	max	3 559	7	- 046	1	0	2	124	1	1 289	1	685	7
16			min	408	1	- 474	7	- 322	3	- 003	7	- 005	7	067	2
17		4	max	3 541	7	- 046	1	0	2	124	1	59	1	1 712	7
18			min	397	1	- 474	7	- 322	3	- 003	7	- 006	7	167	2
19		5	max	3 523	7	- 046	1	0	2	124	1	0	2	2 739	7
20			min	387	1	- 474	7	- 322	3	- 003	7	- 108	3	268	2
21	M3	1	max	505	6	1 468	7	0	1	0	1	0	1	0	1
22			min	059	1	196	2	0	1	0	1	0	1	0	1
23		2	max	349	2	734	7	0	1	0	1	0	1	- 597	2
24			min	- 173	7	098	2	0	1	0	1	0	1	-4 473	7
25		3	max	287	2	0	1	0	1	0	1	0	1	- 796	2
26			min	- 635	7	0	1	0	1	0	1	0	1	-5 964	7
27		4	max	225	2	- 098	1	0	1	0	1	0	1	- 597	2
28			min	-1.098	7	- 734	7	0	1	0	1	0	1	-4 473	7

ST-9

Envelope Member Section Forces (Continued)

	Member	Sec		Axial[k]	LC	y Shear[k]	LC	z Shear[k]	LC	Torque[k-ft]	LC	y-y Mome	LC	z-z Moment[k-ft]	LC
29		5	max	163	2	- 196	1	0	1	0	1	0	1	0	1
30			min	-1 56	7	-1 468	7	0	1	0	1	0	1	0	1
31	M4	1	max	1 338	6	- 196	2	0	1	0	1	0	1	0	1
32			min	182	1	-1 468	7	0	1	0	1	0	1	0	1
33		2	max	965	6	- 098	2	0	1	0	1	0	1	4 473	7
34			min	12	1	- 734	7	0	1	0	1	0	1	597	2
35		3	max	592	6	0	1	0	1	0	1	0	1	5 964	7
36			min	058	1	0	1	0	1	0	1	0	1	796	2
37		4	max	465	2	734	7	0	1	0	1	0	1	4 473	7
38			min	- 185	7	098	1	0	1	0	1	0	1	597	2
39		5	max	403	2	1 468	7	0	1	0	1	0	1	0	1
40			min	- 648	7	196	1	0	1	0	1	0	1	0	1
41	M7	1	max	264	1	2 204	7	- 008	1	0	7	0	1	0	1
42			min	0	7	103	2	- 066	7	0	2	0	1	0	1
43		2	max	264	1	1 813	7	- 008	1	0	7	- 016	1	- 166	2
44			min	0	7	07	2	- 066	7	0	2	- 126	7	-3 848	7
45		3	max	264	1	- 038	2	04	7	0	7	021	2	- 272	2
46			min	0	7	-1 17	7	- 006	2	0	2	- 154	7	-5 982	7
47		4	max	264	1	- 071	2	04	7	0	7	011	2	- 168	2
48			min	0	7	-1 561	7	- 006	2	0	2	- 077	7	-3 366	7
49		5	max	264	1	- 104	2	04	7	0	7	0	1	0	1
50			min	0	7	-1 952	7	- 006	2	0	2	0	1	0	1
51	M8	1	max	293	2	821	7	0	2	0	1	195	3	2 738	7
52			min	0	1	09	1	- 057	3	0	1	0	2	268	2
53		2	max	293	2	811	7	0	2	0	1	146	3	2 041	7
54			min	0	1	084	1	- 057	3	0	1	0	2	194	2
55		3	max	293	2	802	7	0	2	0	1	097	3	1 352	7
56			min	0	1	078	1	- 057	3	0	1	0	2	124	2
57		4	max	293	2	792	7	0	2	0	1	049	3	672	7
58			min	0	1	073	1	- 057	3	0	1	0	2	059	2
59		5	max	293	2	782	7	0	2	0	1	0	1	0	7
60			min	0	1	067	1	- 057	3	0	1	0	1	0	2
61	M9	1	max	04	1	782	7	0	1	0	7	0	1	0	1
62			min	0	7	.067	1	0	1	0	2	0	1	0	1
63		2	max	04	1	391	7	0	1	0	7	0	1	- 096	1
64			min	0	7	- 033	1	0	1	0	2	0	1	-1 124	7
65		3	max	04	1	0	1	0	1	0	7	0	1	- 128	1
66			min	0	7	0	1	0	1	0	2	0	1	-1 499	7
67		4	max	04	1	- 033	1	0	1	0	7	0	1	- 096	1
68			min	0	7	- 391	7	0	1	0	2	0	1	-1 124	7
69		5	max	04	1	- 067	1	0	1	0	7	0	1	0	1
70			min	0	7	- 782	7	0	1	0	2	0	1	0	1
71	M10	1	max	302	2	- 067	1	0	7	0	1	0	1	0	2
72			min	0	1	- 782	7	- 04	1	0	1	0	1	0	7
73		2	max	302	2	- 073	1	0	7	0	1	0	7	672	7
74			min	0	1	- 792	7	- 04	1	0	1	- 034	1	059	1
75		3	max	302	2	- 078	1	0	7	0	1	001	7	1 352	7
76			min	0	1	-.802	7	- 04	1	0	1	- 068	1	124	1
77		4	max	302	2	- 084	1	0	7	0	1	002	7	2 041	7
78			min	0	1	- 811	7	- 04	1	0	1	- 102	1	194	1
79		5	max	302	2	- 09	1	0	7	0	1	002	7	2 738	7
80			min	0	1	- 821	7	- 04	1	0	1	- 135	1	268	1
81	M12	1	max	- 069	2	023	7	064	7	0	1	- 009	2	0	7
82			min	- 653	7	014	1	002	2	0	1	- 255	7	0	1
83		2	max	- 069	2	012	7	064	7	0	1	- 007	2	- 01	2
84			min	- 653	7	007	1	002	2	0	1	- 191	7	- 017	3
85		3	max	- 069	2	0	7	064	7	0	1	- 004	2	- 014	2

ST-10

Envelope Member Section Forces (Continued)

	Member	Sec		Axial[k]	LC	y Shear[k]	LC	z Shear[k]	LC	Torque[k-ft]	LC	y-y Mome	LC	z-z Moment[k-ft]	LC
86			min	-.653	7	0	1	002	2	0	1	- 127	7	- 023	3
87		4	max	- 069	2	- 007	2	064	7	0	1	- 002	2	- 01	2
88			min	-.653	7	- 011	3	002	2	0	1	- 064	7	- 017	3
89		5	max	- 069	2	- 014	2	064	7	0	1	0	1	0	1
90			min	- 653	7	- 023	3	002	2	0	1	0	1	0	1
91	M12A	1	max	377	4	909	7	0	1	0	2	0	1	0	1
92			min	- 016	7	106	2	0	1	- 13	3	0	1	0	1
93		2	max	336	2	455	7	0	1	0	2	0	1	- 174	2
94			min	- 316	7	053	2	0	1	- 13	3	0	1	-1 498	7
95		3	max	301	2	0	1	0	1	0	2	0	1	- 232	2
96			min	- 616	7	0	1	0	1	- 13	3	0	1	-1 997	7
97		4	max	267	2	- 053	1	0	1	0	2	0	1	- 174	2
98			min	- 915	7	- 455	7	0	1	- 13	3	0	1	-1 498	7
99		5	max	232	2	- 106	1	0	1	0	2	0	1	0	1
100			min	-1 215	7	- 909	7	0	1	- 13	3	0	1	0	1
101	M13	1	max	445	7	909	7	0	1	0	2	0	1	0	1
102			min	025	1	106	2	0	1	0	5	0	1	0	1
103		2	max	145	7	455	7	0	1	0	2	0	1	- 174	2
104			min	- 01	1	053	2	0	1	0	5	0	1	-1 498	7
105		3	max	- 005	2	0	1	0	1	0	2	0	1	- 232	2
106			min	- 155	7	0	1	0	1	0	5	0	1	-1 997	7
107		4	max	- 04	2	- 053	1	0	1	0	2	0	1	- 174	2
108			min	- 454	7	- 455	7	0	1	0	5	0	1	-1 498	7
109		5	max	- 075	2	- 106	1	0	1	0	2	0	1	0	1
110			min	- 754	7	-.909	7	0	1	0	5	0	1	0	1
111	M14	1	max	- 207	2	05	3	069	5	0	1	- 009	2	0	3
112			min	-1.705	7	014	2	002	2	0	1	- 256	7	0	2
113		2	max	- 207	2	039	3	069	5	0	1	- 006	2	- 011	2
114			min	-1 705	7	007	2	002	2	0	1	- 191	7	- 044	3
115		3	max	- 207	2	027	3	069	5	0	1	012	1	- 014	2
116			min	-1 705	7	0	2	002	2	0	1	-.126	7	- 077	3
117		4	max	- 207	2	02	1	069	5	0	1	041	1	- 011	2
118			min	-1 705	7	- 011	4	002	2	0	1	- 06	7	-.098	3
119		5	max	- 207	2	013	1	069	5	0	1	071	3	0	2
120			min	-1 705	7	- 023	4	002	2	0	1	0	2	-.108	3
121	M15	1	max	- 002	2	402	7	- 005	2	0	1	256	7	0	1
122			min	- 064	7	.031	2	- 146	7	0	7	009	2	0	1
123		2	max	- 002	2	201	7	- 005	2	0	1	128	7	- 02	1
124			min	- 064	7	015	2	- 146	7	0	7	005	2	- 264	7
125		3	max	- 002	2	0	1	- 005	2	0	1	008	3	- 027	1
126			min	- 064	7	0	1	- 146	7	0	7	0	2	- 351	7
127		4	max	- 002	2	- 015	1	- 005	2	0	1	- 004	2	- 02	1
128			min	- 064	7	- 201	7	- 146	7	0	7	- 127	7	- 264	7
129		5	max	- 002	2	- 031	1	- 005	2	0	1	- 009	2	0	1
130			min	- 064	7	- 402	7	-.146	7	0	7	- 255	7	0	1
131	M16A	1	max	2 447	7	014	6	0	1	0	1	0	1	0	1
132			min	274	2	009	2	0	1	0	1	0	1	0	1
133		2	max	2 453	7	007	6	0	1	0	1	01	6	- 006	2
134			min	278	2	004	2	0	1	0	1	006	2	- 01	6
135		3	max	2 46	7	0	1	0	1	0	1	013	6	- 008	2
136			min	282	2	0	1	0	1	0	1	008	2	- 013	6
137		4	max	2 466	7	- 004	1	0	1	0	1	01	6	- 006	2
138			min	286	2	- 007	5	0	1	0	1	006	2	- 01	6
139		5	max	2 472	7	- 009	1	0	1	0	1	0	1	0	1
140			min	289	2	- 014	5	0	1	0	1	0	1	0	1
141	M17A	1	max	662	7	014	6	0	1	0	1	0	1	0	1
142			min	078	1	009	1	0	1	0	1	0	1	0	1

Envelope Member Section Forces (Continued)

	Member	Sec		Axial[k]	LC	y Shear[k]	LC	z Shear[k]	LC	Torque[k-ft]	LC	y-y Mome ..	LC	z-z Moment[k-ft]	LC
143		2	max	668	7	007	6	0	1	0	1	01	6	- 006	1
144			min	082	1	004	1	0	1	0	1	006	1	- 01	6
145		3	max	674	7	0	1	0	1	0	1	013	6	- 008	1
146			min	085	1	0	1	0	1	0	1	008	1	- 013	6
147		4	max	68	7	- 004	2	0	1	0	1	01	6	- 006	1
148			min	089	1	- 007	7	0	1	0	1	006	1	- 01	6
149		5	max	687	7	- 009	2	0	1	0	1	0	1	0	1
150			min	.093	1	- 014	7	0	1	0	1	0	1	0	1

Hot Rolled Steel Section Sets

	Label	Shape	Type	Design List	Material	Design Rules	A [in2]	Iyy [in4]	Izz [in4]	J [in4]
1	Horiz Brace	L2X2X4	VBrace	Single Angle	A36 Gr 36	Typical	938	348	348	02
2	BRACE	L3X3X6	VBrace	Single Angle	A36 Gr 36	Typical	2 11	1 76	1.76	103
3	COLUMN	HSS3X3X4	Column	SquareTube	A500 Gr 46	Typical	2 435	3 014	3 014	5 069
4	LANDING	C8X11 5	Beam	Channel	A36 Gr 36	Typical	3 38	1 32	32 6	.13
5	STRINGER	C12X30	Beam	Channel	A36 Gr 36	Typical	8 82	5 14	162	87

GRV STORAGE TO MEZZ STAIR -

DL = 10 PSF + SELF WT
LL = 100 PSF

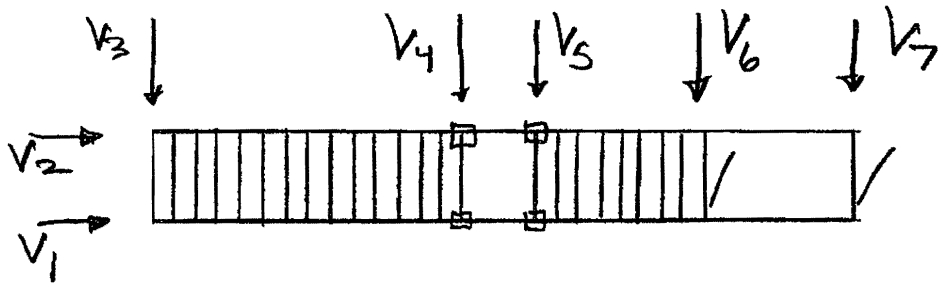

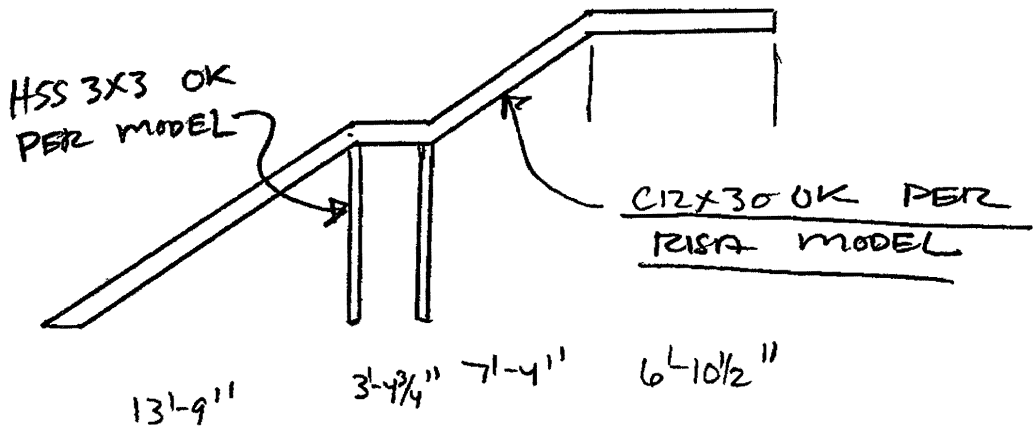

$V_1 = (.46)((7)(4)(10) + 2(7)(30)) = 324^{\#}$

$V_2 = V_1$

$V_3 = (7(4)(10) + 7(2)(30))(.46) = 324^{\#}$

$V_4 = V_3 + (2(4)(10) + 2(30)(2))(.46) = 418^{\#}$

$V_5 = (4(6)(10) + 6(2)(30))(.46) = 278^{\#}$

$V_6 = (8(4)(10) + 8(2)(30))(.46) = 370^{\#}$

$V_7 = (4(4)(10) + 4(2)(30))(.231) = 186^{\#}$

KGA KRAMER GEHLEN ASSOCIATES	PROJECT PDX DEICING PLATFORM STAIRS		
	CLIENT		
CONSULTING ENGINEERS – STRUCTURAL/CIVIL 400 Columbia St. 360 / 693-1621 Suite 240 503 / 289-2661 Vancouver WA Fax 360 / 696-1572 98660-3413 www.kga.cc	DATE 8/13/10	DESIGN JB	
	PROJECT NO 10181-00	SHEET ST-13	

GRV STORAGE TO MBZZ –

LANDING TO CMU ATTACHMENT –

$V = 1.9^K$

2-5/8" x 6 SIMP TITEN HD $V_{ALL} = 2085(.62)(2) = 2585^{\#}$

$2.6^K > 1.9^K \Rightarrow$ USE 2-5/8"x6 GALV. TITEN HD @ 5" oc.

KGA KRAMER GEHLEN ASSOCIATES	PROJECT PDX DEICING PLATFORM STAIRS		
	CLIENT		
CONSULTING ENGINEERS – STRUCTURAL/CIVIL.	DATE 8/17/10	DESIGN JB	
400 Columbia St, Suite 240, Vancouver, WA 98660-3413	PROJECT NO 10101	SHEET ST-14	
360 / 693-1621; 503 / 289-2661; Fax 360 / 696-1572; www.kga.cc			

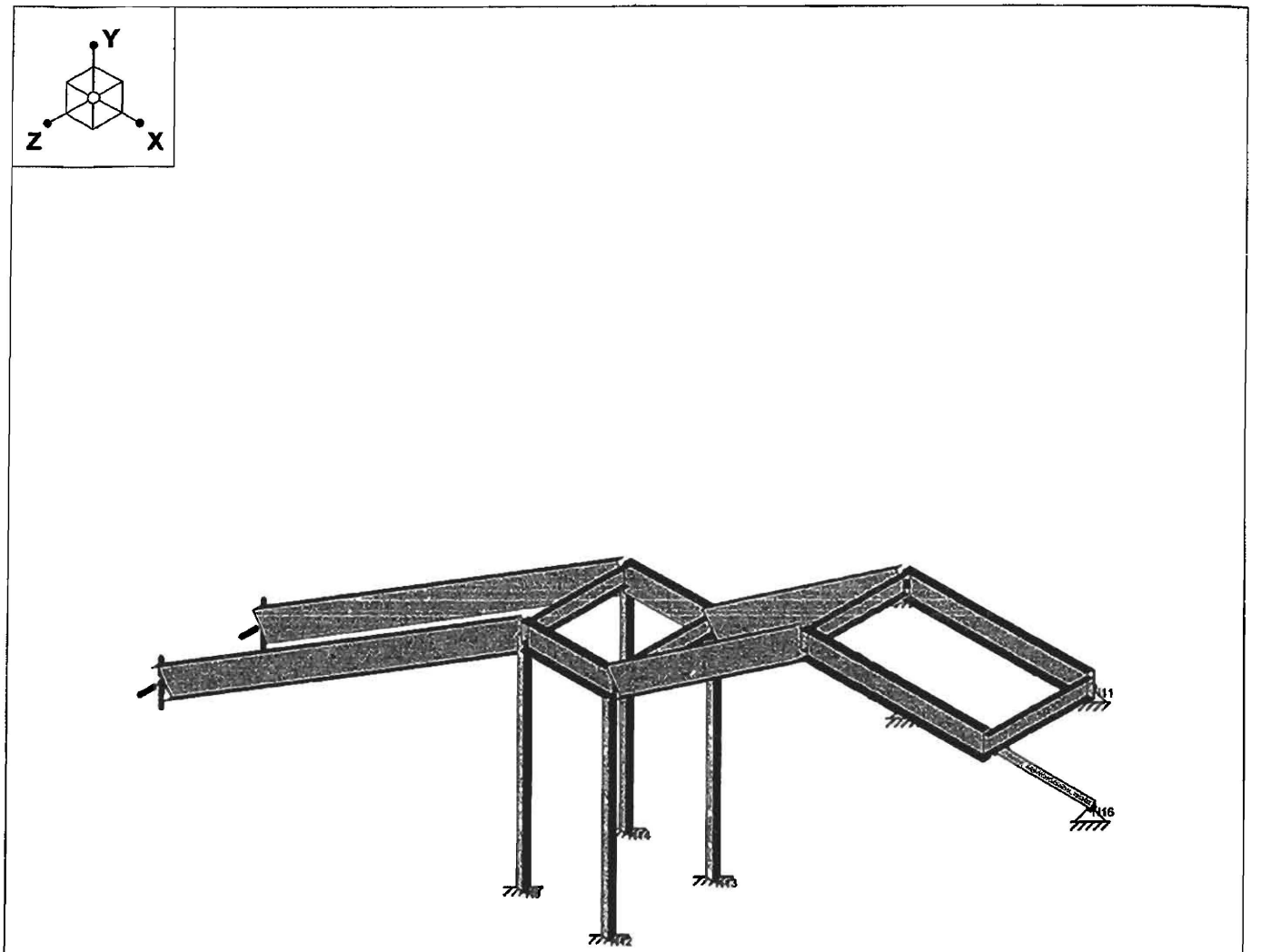

		Sept 1, 2010 at 3 06 PM
		GRV Storage to Mezz. Stairs r3d

ST-15

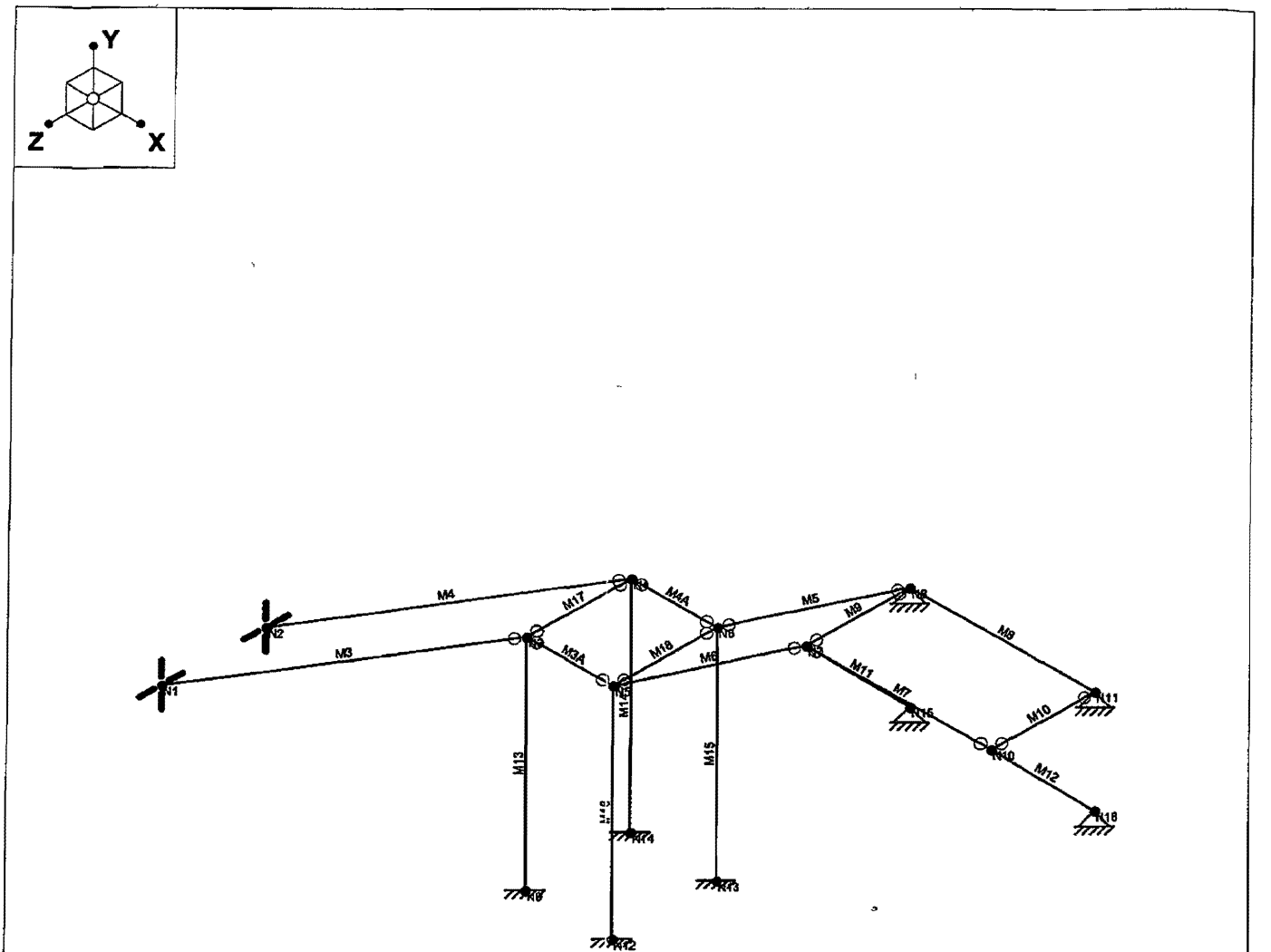

		Sept 1, 2010 at 3 06 PM
		GRV Storage to Mezz. Stairs r3d

ST-16

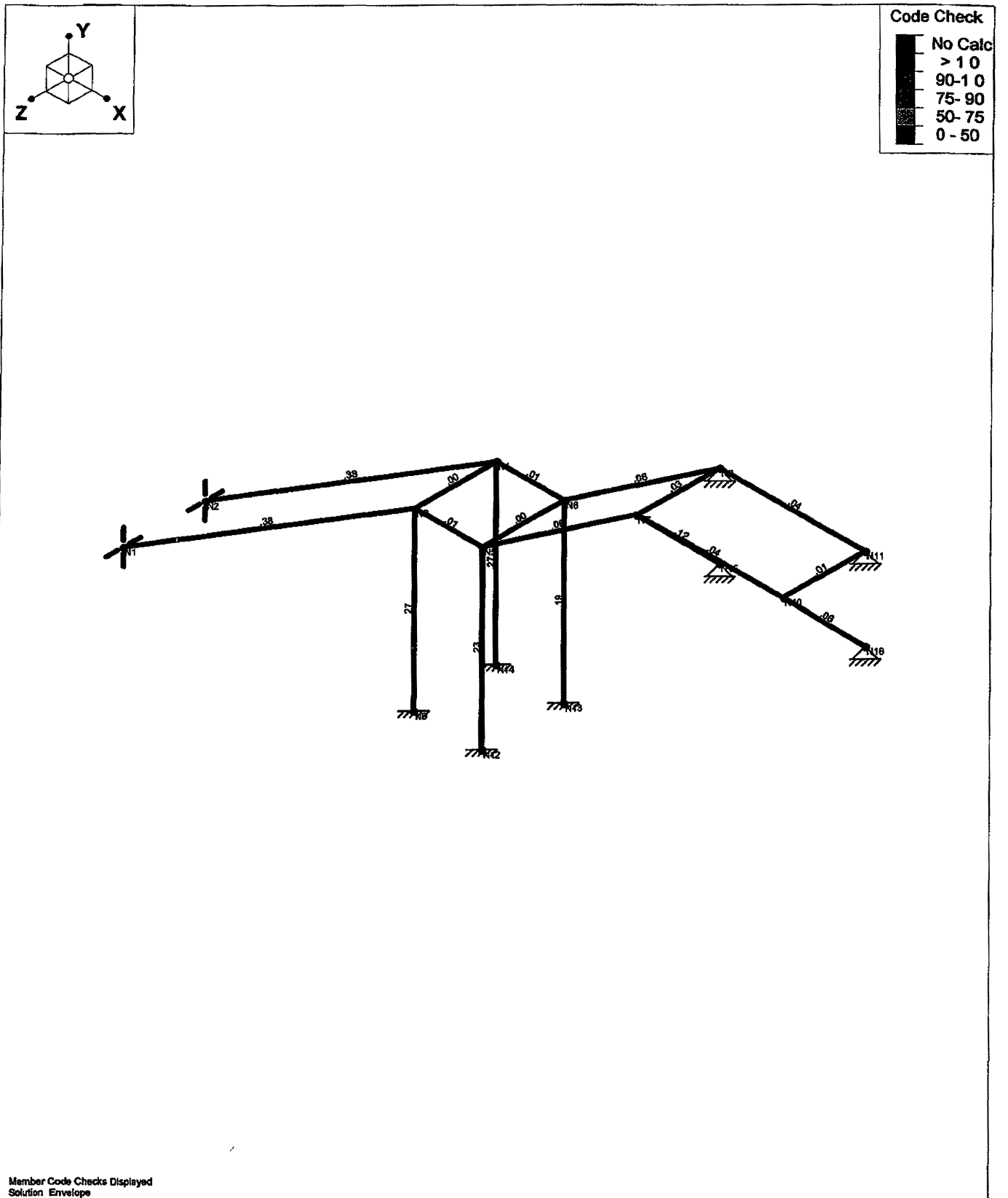

Member Code Checks Displayed
Solution Envelope

		Sept 1, 2010 at 3 07 PM
		GRV Storage to Mezz. Stairs r3d

ST-17

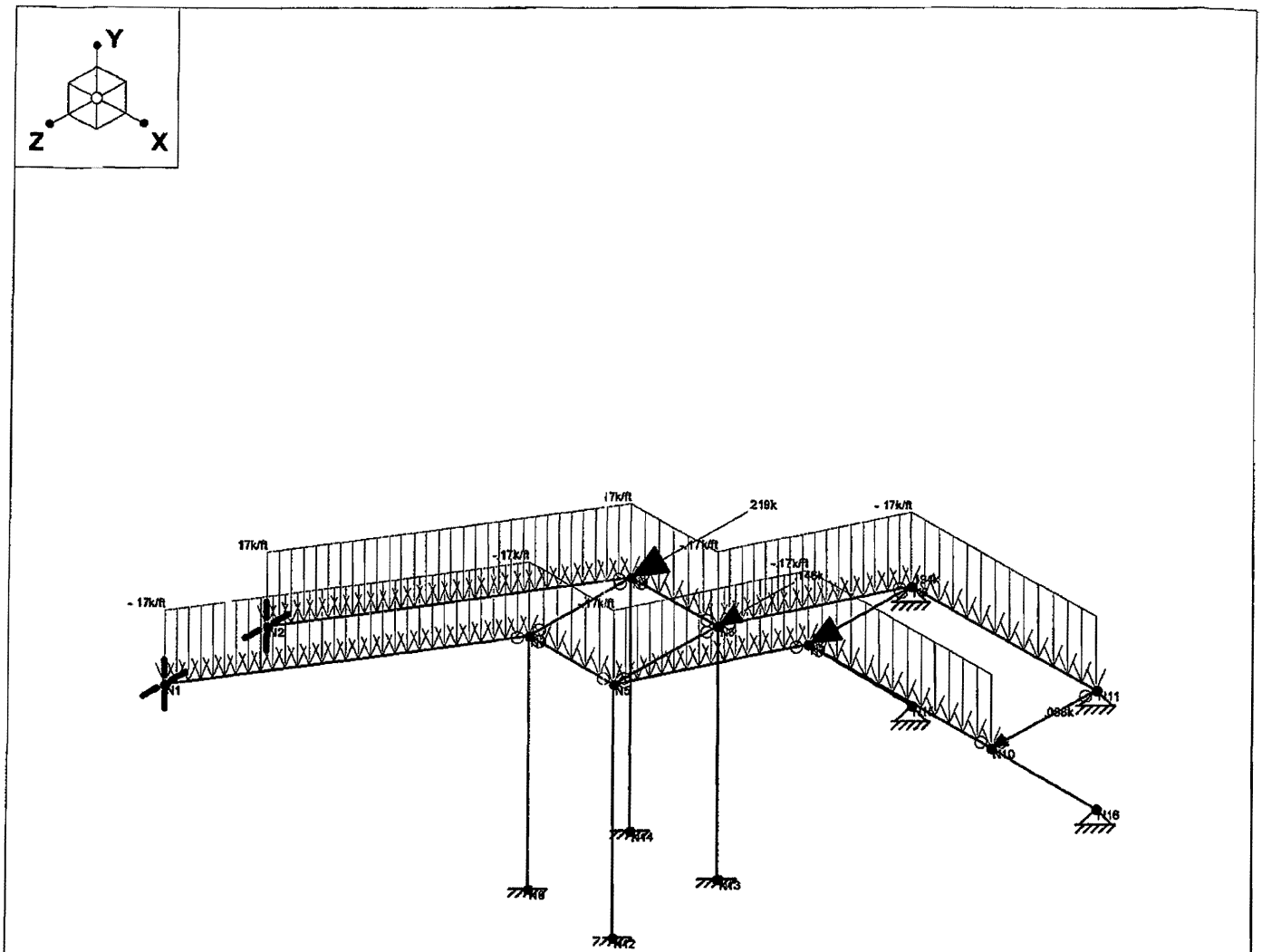

Loads. LC 5 DL+.75LL+.525ELz
Solution Envelope

		Sept 1, 2010 at 3 07 PM
		GRV Storage to Mezz. Stairs r3d

ST-18

Basic Load Cases

	BLC Description	Category	X Gravity	Y Gravity	Z Gravity	Joint	Point	Distributed	Area (Me	Surface (
1	DL	DL		-1				8		
2	LL	LL						8		
3	ELx	ELX						8		
4	ELz	ELZ				4				

Joint Boundary Conditions

	Joint Label	X [k/in]	Y [k/in]	Z [k/in]	X Rot [k-ft/rad]	Y Rot [k-ft/rad]	Z Rot [k-ft/rad]	Footing
1	N1		Reaction	Reaction				
2	N2		Reaction	Reaction				
3	N15	Reaction	Reaction	Reaction				
4	N16	Reaction	Reaction	Reaction				
5	N10							
6	N12	Reaction	Reaction	Reaction	Reaction	Reaction	Reaction	
7	N13	Reaction	Reaction	Reaction	Reaction	Reaction	Reaction	
8	N9	Reaction	Reaction	Reaction	Reaction	Reaction	Reaction	
9	N14	Reaction	Reaction	Reaction	Reaction	Reaction	Reaction	
10	N11	Reaction	Reaction	Reaction				
11	N8	Reaction	Reaction	Reaction				

Hot Rolled Steel Design Parameters

	Label	Shape	Length	Lbyy[ft]	Lbzz[ft]	Lcomp to	Lcomp bo.	Kyy	Kzz	Cm-yy	Cm-zz	Cb	y sway	z sway	Function
1	M3	STRING	16 165												Lateral
2	M4	STRING	16 165												Lateral
3	M3A	STRING	3 25												Lateral
4	M4A	STRING	3 25												Lateral
5	M5	STRING	8 875												Lateral
6	M6	STRING	8 875												Lateral
7	M7	STRING	6 967												Lateral
8	M8	STRING	6 967												Lateral
9	M9	LANDING	3 9												Lateral
10	M10	LANDING	3 9												Lateral
11	M11	BRACE	5 587												Lateral
12	M12	BRACE	5 587												Lateral
13	M13	COLUMN	8 5												Lateral
14	M14	COLUMN	8.5												Lateral
15	M15	COLUMN	8 5												Lateral
16	M16	COLUMN	8 5												Lateral
17	M17	LANDING	3 9												Lateral
18	M18	LANDING	3 9												Lateral

Envelope AISC ASD Steel Code Checks

	Member	Shape	Code C	Loc[ft]	LC	Shear C	Loc[ft]	Dir	LC	Fa [ksi]	Ft [ksi]	Fb y-y [	Fb z-z [	Cb	Cmy	Cmz	ASD Eqn
1	M3	C12X30	379	7 577	7	020	16 165	y	7	2 313	21 6	27	8 187	1	6	1	H1-3
2	M4	C12X30	379	7 577	7	020	0	y	7	2 313	21 6	27	8 187	1	6	1	H1-3
3	M3A	C12X30	007	1 625	7	021	3 25	y	3	18 254	21 6	27	21 6	1	6	1	H2-1
4	M4A	C12X30	007	1 625	7	020	0	y	3	18 254	21 6	27	21 6	1	6	1	H2-1
5	M5	C12X30	061	4 068	7	010	8 875	y	7	7 672	21 6	27	14 912	1	6	1	H1-3
6	M6	C12X30	061	4 068	7	016	0	y	6	7 672	21 6	27	14 912	1	6	1	H1-3
7	M7	C12X30	035	3 484	7	010	0	y	7	11 737	21 6	27	18 996	1	6	1	H1-1
8	M8	C12X30	035	3 484	7	010	0	y	7	11.737	21 6	27	18 996	1	6	85	H1-2
9	M9	C8X11 5	029	1 95	7	029	0	y	2	15 914	21 6	27	21 6	1	6	1	H2-1
10	M10	C8X11 5	014	1 95	7	001	0	y	3	15 914	21 6	27	21 6	1	6	1	H2-1

Envelope AISC ASD Steel Code Checks (Continued)

	Member	Shape	Code C	Loc[ft]	LC	Shear C	Loc[ft]	Dir	LC	Fa [ksi]	Ft [ksi]	Fb y-y [	Fb z-z [	Cb	Cmy	Cmz	ASD Eqn
11	M11	L3X3X6	121	0	7	.001	0	y	4	11 098	21 6	- Code					H1-1
12	M12	L3X3X6	.055	0	7	.001	5 587	y	3	11 098	21 6	- Code					H1-1
13	M13	HSS3X3X4	272	0	3	006	0	z	3	15 99	27 6	27 6	27 6	1	587	593	H1-2
14	M14	HSS3X3X4	269	0	3	006	0	z	1	15 99	27 6	27 6	27 6	1	.587	6	H1-2
15	M15	HSS3X3X4	191	0	3	004	0	z	1	15 99	27 6	27 6	27 6	1	618	6	H1-2
16	M16	HSS3X3X4	226	0	4	007	0	y	2	15 99	27 6	27 6	27 6	1	68	593	H1-2
17	M17	C8X11 5	004	1 95	3	046	0	y	4	15 914	21 6	27	21 6	1	6	1	H1-3
18	M18	C8X11 5	003	1 95	3	046	0	y	4	15 914	21 6	27	21 6	1	6	1	H1-3

Envelope Joint Reactions

	Joint		X [k]	LC	Y [k]	LC	Z [k]	LC	MX [k-ft]	LC	MY [k-ft]	LC	MZ [k-ft]	LC
1	N1	max	0	1	2 021	7	0	3	0	1	0	1	0	1
2		min	0	1	.243	1	0	1	0	1	0	1	0	1
3	N2	max	0	1	2 021	7	0	1	0	1	0	1	0	1
4		min	0	1	243	1	0	3	0	1	0	1	0	1
5	N15	max	003	3	2 043	7	1 972	7	0	1	0	1	0	1
6		min	- 003	2	277	1	-.262	1	0	1	0	1	0	1
7	N16	max	0	5	933	7	891	7	0	1	0	1	0	1
8		min	0	4	142	2	126	2	0	1	0	1	0	1
9	N12	max	0	7	1 609	7	001	2	0	7	01	3	1 019	4
10		min	- 122	4	185	2	- 099	3	- 863	1	- 011	2	0	7
11	N13	max	003	2	1 608	7	0	7	0	7	0	1	003	7
12		min	0	7	238	1	- 096	1	- 856	1	0	7	- 008	2
13	N9	max	0	7	2 52	7	0	2	0	7	0	2	1 019	4
14		min	- 122	4	.312	2	-.146	3	-1 204	1	0	3	0	7
15	N14	max	003	2	2 52	7	0	7	0	7	0	7	003	7
16		min	0	7	312	2	- 146	1	-1 204	1	0	1	- 008	2
17	N11	max	0	3	893	7	- 126	2	0	1	0	1	0	1
18		min	- 024	2	116	1	- 891	7	0	1	0	1	0	1
19	N8	max	0	7	2 003	7	- 304	2	0	1	0	1	0	1
20		min	- 229	2	132	2	-1 972	7	0	1	0	1	0	1
21	Totals	max	0	3	18 171	7	0	7						
22		min	- 494	2	2 441	2	- 876	1						

Envelope Joint Displacements

	Joint		X [in]	LC	Y [in]	LC	Z [in]	LC	X Rotation	LC	Y Rotation	LC	Z Rotation [...	LC
1	N14	max	0	7	0	2	0	1	0	1	0	1	0	2
2		min	0	2	0	7	0	7	0	7	0	7	0	7
3	N9	max	0	4	0	2	0	3	0	1	0	3	0	7
4		min	0	7	0	7	0	2	0	7	0	2	0	4
5	N16	max	0	4	0	2	0	2	1 845e-4	7	1 033e-2	4	-2 196e-5	7
6		min	0	5	0	7	0	7	9.293e-5	1	1 328e-4	1	-1 179e-4	4
7	N15	max	0	2	0	1	0	1	2 806e-4	6	5 758e-3	4	4 195e-3	3
8		min	0	3	0	7	0	7	1 678e-5	1	8 587e-5	7	-4 704e-3	2
9	N13	max	0	7	0	1	0	1	0	1	0	7	0	2
10		min	0	2	0	7	0	7	0	7	0	1	0	7
11	N12	max	0	4	0	2	0	3	0	1	0	2	0	7
12		min	0	7	0	7	0	2	0	7	0	3	0	4
13	N11	max	0	2	0	1	0	7	6 265e-3	1	0	7	1 08e-4	7
14		min	0	3	0	7	0	2	-2 194e-6	7	0	1	1 261e-5	1
15	N10	max	482	4	0	2	0	7	-7 538e-5	1	1 023e-2	2	1 08e-4	7
16		min	002	7	- 002	7	0	2	-1 628e-4	4	2 561e-5	3	1 261e-5	1
17	N8	max	0	2	0	2	0	7	6 265e-3	1	0	3	-1 218e-5	1
18		min	0	7	0	7	0	2	-2.194e-6	7	0	7	-1 08e-4	7
19	N7	max	482	4	0	1	0	7	9 45e-5	1	5 427e-3	4	4 129e-3	3

ST-20

Envelope Joint Displacements (Continued)

	Joint		X [in]	LC	Y [in]	LC	Z [in]	LC	X Rotation	LC	Y Rotation	LC	Z Rotation [	LC
20		min	002	7	- 005	7	0	2	-3 304e-4	4	-3 721e-5	7	-4 414e-3	2
21	N6	max	002	7	0	1	417	1	6 265e-3	1	0	7	-3 786e-6	1
22		min	0	1	- 002	7	0	7	-2 194e-6	7	0	1	-7 155e-5	4
23	N5	max	482	4	0	2	417	1	6 215e-3	1	2 398e-4	2	-3 496e-6	7
24		min	0	7	- 002	7	0	7	-3 973e-6	7	-2 262e-4	3	-7.01e-3	4
25	N4	max	002	7	0	2	565	1	8 154e-3	1	0	1	-3 785e-6	1
26		min	0	1	- 004	7	0	7	-6 333e-7	7	0	7	-7 183e-5	4
27	N3	max	482	4	0	2	565	1	8 15e-3	1	0	3	-3 496e-6	7
28		min	0	7	- 004	7	0	7	-7 543e-7	7	0	2	-7 01e-3	4
29	N2	max	0	2	0	1	0	3	7 431e-3	1	1 17e-3	1	-1 415e-4	1
30		min	0	7	0	7	0	1	-5 541e-7	7	-1 281e-7	7	-1 177e-3	7
31	N1	max	482	2	0	1	0	1	7 427e-3	1	1 168e-3	1	-1 415e-4	1
32		min	- 002	7	0	7	0	3	-6 417e-7	7	-1 822e-7	7	-1 177e-3	7

Joint Coordinates and Temperatures

	Label	X [ft]	Y [ft]	Z [ft]	Temp [F]	Detach From Dia
1	N14	13 75	0	-3 9	0	
2	N9	13 75	0	0	0	
3	N16	31 3	9 5	-3 9	0	
4	N15	24 333	9 5	-3 9	0	
5	N13	17	0	-3 9	0	
6	N12	17	0	0	0	
7	N11	31 3	13 5	-3 9	0	
8	N10	31 3	13 5	0	0	
9	N8	24 333	13 5	-3 9	0	
10	N7	24 333	13 5	0	0	
11	N6	17	8 5	-3 9	0	
12	N5	17	8 5	0	0	
13	N4	13 75	8 5	-3 9	0	
14	N3	13 75	8 5	0	0	
15	N2	0	0	-3 9	0	
16	N1	0	0	0	0	

Member Distributed Loads (BLC 1 : DL)

	Member Label	Direction	Start Magnitude[k/ft,d	End Magnitude[k/ft,d	Start Location[ft,%]	End Location[ft,%]
1	M3	Y	- 02	- 02	0	0
2	M4	Y	- 02	- 02	0	0
3	M7	Y	- 02	- 02	0	0
4	M6	Y	- 02	- 02	0	0
5	M3A	Y	- 02	- 02	0	0
6	M4A	Y	- 02	- 02	0	0
7	M5	Y	- 02	- 02	0	0
8	M8	Y	- 02	- 02	0	0

Member Distributed Loads (BLC 2 : LL)

	Member Label	Direction	Start Magnitude[k/ft,d	End Magnitude[k/ft,d	Start Location[ft,%]	End Location[ft,%]
1	M3	Y	- 2	- 2	0	0
2	M4	Y	- 2	- 2	0	0
3	M3A	Y	- 2	- 2	0	0
4	M6	Y	- 2	- 2	0	0
5	M7	Y	- 2	- 2	0	0
6	M8	Y	- 2	- 2	0	0
7	M5	Y	- 2	- 2	0	0
8	M4A	Y	-.2	- 2	0	0

Member Distributed Loads (BLC 3 : ELx)

	Member Label	Direction	Start Magnitude[k/ft,d	End Magnitude[k/ft,d	Start Location[ft,%]	End Location[ft,%]
1	M7	X	01	01	0	0
2	M6	X	01	01	0	0
3	M3A	X	01	01	0	0
4	M3	X	01	01	0	0
5	M4	X	01	01	0	0
6	M4A	X	01	01	0	0
7	M5	X	01	01	0	0
8	M8	X	01	01	0	0

Joint Loads and Enforced Displacements (BLC 4 : ELz)

	Joint Label	L,D,M	Direction	Magnitude[(k,k-ft), (in,rad), (k*s^2/ft
1	N4	L	Z	418
2	N6	L	Z	278
3	N7	L	Z	37
4	N10	L	Z	186

Hot Rolled Steel Properties

	Label	E [ksi]	G [ksi]	Nu	Therm (\1E5 F)	Density[k/ft^3]	Yield[ksi]
1	A36 Gr 36	29000	11154	3	65	49	36
2	A572 Gr 50	29000	11154	3	65	49	50
3	A992	29000	11154	3	65	49	50
4	A500 Gr 42	29000	11154	3	65	49	42
5	A500 Gr 46	29000	11154	3	65	49	46

Member Primary Data

	Label	I Joint	J Joint	K Joint	Rotate(deg)	Section/Shape	Type	Design List	Material	Design Rules
1	M3	N1	N3			STRINGER	Beam	Channel	A36 Gr 36	Typical
2	M4	N2	N4		180	STRINGER	Beam	Channel	A36 Gr 36	Typical
3	M3A	N3	N5			STRINGER	Beam	Channel	A36 Gr 36	Typical
4	M4A	N4	N6		180	STRINGER	Beam	Channel	A36 Gr 36	Typical
5	M5	N6	N8		180	STRINGER	Beam	Channel	A36 Gr 36	Typical
6	M6	N5	N7			STRINGER	Beam	Channel	A36 Gr 36	Typical
7	M7	N7	N10			STRINGER	Beam	Channel	A36 Gr 36	Typical
8	M8	N8	N11			STRINGER	Beam	Channel	A36 Gr 36	Typical
9	M9	N7	N8			LANDING	Beam	Channel	A36 Gr 36	Typical
10	M10	N10	N11			LANDING	Beam	Channel	A36 Gr 36	Typical
11	M11	N15	N7			BRACE	VBrace	Single Angle	A36 Gr 36	Typical
12	M12	N16	N10			BRACE	VBrace	Single Angle	A36 Gr 36	Typical
13	M13	N9	N3			COLUMN	Column	SquareTube	A500 Gr 46	Typical
14	M14	N14	N4			COLUMN	Column	SquareTube	A500 Gr 46	Typical
15	M15	N13	N6			COLUMN	Column	SquareTube	A500 Gr 46	Typical
16	M16	N12	N5			COLUMN	Column	SquareTube	A500 Gr 46	Typical
17	M17	N3	N4			LANDING	Beam	Channel	A36 Gr 36	Typical
18	M18	N5	N6			LANDING	Beam	Channel	A36 Gr 36	Typical

Envelope Member Section Forces

	Member	Sec		Axial[k]	LC	y Shear[k]	LC	z Shear[k]	LC	Torque[k-ft]	LC	y-y Mome	LC	z-z Moment[k-ft]	LC
1	M3	1	max	1 063	7	1 719	7	0	1	0	1	0	1	0	1
2			min	128	1	206	1	0	1	0	1	0	1	0	1
3		2	max	531	7	859	7	0	1	0	1	0	1	- 625	1
4			min	064	1	103	1	0	1	0	1	0	1	-5 21	7
5		3	max	067	4	0	1	0	1	0	1	0	1	- 834	1

ST-22

Envelope Member Section Forces (Continued)

	Member	Sec		Axial[k]	LC	y Shear[k]	LC	z Shear[k]	LC	Torque[k-ft]	LC	y-y Mome	LC	z-z Moment[k-ft]	LC
6			min	0	1	0	1	0	1	0	1	0	1	-6 946	7
7		4	max	027	2	- 103	1	0	1	0	1	0	1	- 625	1
8			min	- 531	7	- 859	7	0	1	0	1	0	1	-5 21	7
9		5	max	- 013	2	- 206	1	0	1	0	1	0	1	0	1
10			min	-1 063	7	-1 719	7	0	1	0	1	0	1	0	1
11	M4	1	max	1 063	7	- 206	1	0	1	0	1	0	1	0	1
12			min	128	1	-1 719	7	0	1	0	1	0	1	0	1
13		2	max	531	7	- 103	1	0	1	0	1	0	1	5 21	7
14			min	064	1	- 859	7	0	1	0	1	0	1	625	1
15		3	max	067	4	0	1	0	1	0	1	0	1	6 946	7
16			min	0	1	0	1	0	1	0	1	0	1	834	1
17		4	max	027	2	859	7	0	1	0	1	0	1	5 21	7
18			min	- 531	7	103	1	0	1	0	1	0	1	625	1
19		5	max	- 013	2	1 719	7	0	1	0	1	0	1	0	1
20			min	-1 063	7	206	1	0	1	0	1	0	1	0	1
21	M3A	1	max	0	7	406	7	0	1	04	3	0	1	0	1
22			min	- 009	4	049	2	0	1	- 002	2	0	1	0	1
23		2	max	0	7	203	7	0	1	04	3	0	1	- 03	2
24			min	- 003	4	024	2	0	1	- 002	2	0	1	- 248	7
25		3	max	003	2	0	1	0	1	04	3	0	1	- 04	2
26			min	- 001	3	0	1	0	1	- 002	2	0	1	- 33	7
27		4	max	008	2	- 024	1	0	1	04	3	0	1	- 03	2
28			min	- 001	3	- 203	7	0	1	-.002	2	0	1	- 248	7
29		5	max	014	2	- 049	1	0	1	04	3	0	1	0	1
30			min	- 001	3	-.406	7	0	1	- 002	2	0	1	0	1
31	M4A	1	max	116	2	- 049	2	0	1	039	3	0	1	0	1
32			min	0	7	- 406	7	0	1	0	2	0	1	0	1
33		2	max	122	2	- 024	2	0	1	039	3	0	1	248	7
34			min	0	7	- 203	7	0	1	0	2	0	1	03	2
35		3	max	128	2	0	1	0	1	039	3	0	1	33	7
36			min	0	7	0	1	0	1	0	2	0	1	04	2
37		4	max	133	2	203	7	0	1	039	3	0	1	248	7
38			min	0	7	024	1	0	1	0	2	0	1	03	2
39		5	max	139	2	406	7	0	1	039	3	0	1	0	1
40			min	0	7	049	1	0	1	0	2	0	1	0	1
41	M5	1	max	637	6	- 11	1	0	1	0	1	0	1	0	1
42			min	075	1	- 917	7	0	1	0	1	0	1	0	1
43		2	max	397	6	- 055	1	0	1	0	1	0	1	1 525	7
44			min	037	1	- 458	7	0	1	0	1	0	1	183	1
45		3	max	209	2	0	1	0	1	0	1	0	1	2 034	7
46			min	0	7	0	1	0	1	0	1	0	1	244	1
47		4	max	185	2	458	7	0	1	0	1	0	1	1 525	7
48			min	- 313	7	055	1	0	1	0	1	0	1	183	1
49		5	max	16	2	917	7	0	1	0	1	0	1	0	1
50			min	- 626	7	11	1	0	1	0	1	0	1	0	1
51	M6	1	max	625	7	917	7	0	1	019	3	0	1	0	1
52			min	-.044	2	11	1	0	1	- 02	2	0	1	0	1
53		2	max	312	7	458	7	0	1	019	3	0	1	- 183	1
54			min	-.069	2	055	1	0	1	- 02	2	0	1	-1 525	7
55		3	max	0	7	0	1	0	1	019	3	0	1	- 244	1
56			min	- 093	4	0	1	0	1	- 02	2	0	1	-2 034	7
57		4	max	- 041	1	- 055	1	0	1	019	3	0	1	- 183	1
58			min	- 313	7	- 458	7	0	1	- 02	2	0	1	-1 525	7
59		5	max	- 078	1	- 11	1	0	1	019	3	0	1	0	1
60			min	- 625	7	- 917	7	0	1	- 02	2	0	1	0	1
61	M7	1	max	0	1	871	7	0	1	002	3	0	1	0	1
62			min	- 049	2	105	1	0	1	- 002	2	0	1	0	1

Envelope Member Section Forces (Continued)

	Member	Sec		Axial[k]	LC	y Shear[k]	LC	z Shear[k]	LC	Torque[k-ft]	LC	y-y Mome	LC	z-z Moment[k-ft]	LC
63		2	max	0	1	435	7	0	1	002	3	0	1	- 137	1
64			min	- 037	2	052	1	0	1	- 002	2	0	1	-1 138	7
65		3	max	0	1	0	1	0	1	002	3	0	1	- 182	1
66			min	- 024	2	0	1	0	1	- 002	2	0	1	-1 517	7
67		4	max	0	1	- 052	1	0	1	002	3	0	1	- 137	1
68			min	- 012	2	- 435	7	0	1	- 002	2	0	1	-1 138	7
69		5	max	0	1	- 105	1	0	1	002	3	0	1	0	1
70			min	0	1	- 871	7	0	1	- 002	2	0	1	0	1
71	M8	1	max	0	1	871	7	0	1	0	1	0	1	011	3
72			min	- 024	2	103	2	0	1	0	1	0	1	- 011	2
73		2	max	0	1	436	7	0	1	0	1	0	1	- 129	1
74			min	- 012	2	.051	2	0	1	0	1	0	1	-1.137	7
75		3	max	0	1	002	3	0	1	0	1	0	1	- 177	1
76			min	0	1	-.002	2	0	1	0	1	0	1	-1 517	7
77		4	max	012	2	- 051	1	0	1	0	1	0	1	- 134	1
78			min	0	1	- 435	7	0	1	0	1	0	1	-1 138	7
79		5	max	024	2	- 103	1	0	1	0	1	0	1	0	1
80			min	0	1	- 871	7	0	1	0	1	0	1	0	1
81	M9	1	max	- 304	2	022	3	0	1	011	2	0	1	0	1
82			min	-1 972	7	013	1	0	1	- 011	3	0	1	0	1
83		2	max	- 304	2	011	3	0	1	011	2	0	1	- 01	1
84			min	-1 972	7	007	1	0	1	-.011	3	0	1	- 016	3
85		3	max	- 304	2	0	1	0	1	011	2	0	1	- 013	1
86			min	-1 972	7	0	1	0	1	- 011	3	0	1	- 022	3
87		4	max	- 304	2	- 007	1	0	1	011	2	0	1	- 01	1
88			min	-1 972	7	- 011	3	0	1	- 011	3	0	1	- 016	3
89		5	max	- 304	2	- 013	1	0	1	011	2	0	1	0	1
90			min	-1 972	7	- 022	3	0	1	- 011	3	0	1	0	1
91	M10	1	max	- 126	2	022	3	0	1	0	1	0	1	0	1
92			min	- 891	7	013	1	0	1	0	1	0	1	0	1
93		2	max	- 126	2	011	3	0	1	0	1	0	1	- 01	1
94			min	- 891	7	007	1	0	1	0	1	0	1	- 016	3
95		3	max	- 126	2	0	1	0	1	0	1	0	1	- 013	1
96			min	- 891	7	0	1	0	1	0	1	0	1	- 022	3
97		4	max	- 126	2	- 007	1	0	1	0	1	0	1	- 01	1
98			min	- 891	7	- 011	3	0	1	0	1	0	1	- 016	3
99		5	max	- 126	2	- 013	1	0	1	0	1	0	1	0	1
100			min	- 891	7	- 022	3	0	1	0	1	0	1	0	1
101	M11	1	max	2 84	7	017	4	003	2	0	1	0	1	0	1
102			min	381	1	006	1	- 003	3	0	1	0	1	0	1
103		2	max	2 833	7	01	4	003	2	0	1	016	4	- 006	2
104			min	377	1	002	1	- 003	3	0	1	001	1	- 011	3
105		3	max	2 825	7	003	2	003	2	0	1	024	4	- 008	2
106			min	372	1	- 002	3	- 003	3	0	1	- 002	1	- 014	3
107		4	max	2 818	7	- 002	2	003	2	0	1	026	4	- 006	2
108			min	368	1	- 009	3	- 003	3	0	1	- 009	1	- 011	3
109		5	max	2 811	7	- 006	2	003	2	0	1	022	2	0	2
110			min	364	1	- 016	3	- 003	3	0	1	- 02	3	0	3
111	M12	1	max	1 29	7	014	4	0	1	0	1	0	1	0	1
112			min	19	2	008	1	0	1	0	1	0	1	0	1
113		2	max	1 283	7	007	4	0	1	0	1	011	4	- 006	1
114			min	186	2	004	1	0	1	0	1	006	1	- 011	4
115		3	max	1 276	7	0	2	0	1	0	1	014	4	- 008	1
116			min	181	2	0	3	0	1	0	1	008	1	- 014	4
117		4	max	1 269	7	- 004	2	0	1	0	1	011	4	- 005	1
118			min	177	2	- 007	3	0	1	0	1	005	1	- 011	4
119		5	max	1 261	7	- 008	2	0	1	0	1	001	2	001	3

Envelope Member Section Forces (Continued)

	Member	Sec		Axial[k]	LC	y Shear[k]	LC	z Shear[k]	LC	Torque[k-ft]	LC	y-y Mome	LC	z-z Moment[k-ft]	LC
120			min	173	2	- 014	3	0	1	0	1	- 001	3	- 001	2
121	M13	1	max	2 52	7	122	4	0	2	0	1	1 204	1	1 019	4
122			min	312	2	0	7	- 146	3	0	1	0	7	0	7
123		2	max	2 502	7	122	4	0	2	0	1	893	1	76	4
124			min	301	2	0	7	- 146	3	0	1	0	7	0	7
125		3	max	2 485	7	122	4	0	2	0	1	582	1	501	4
126			min	291	2	0	7	- 146	3	0	1	0	7	0	7
127		4	max	2 467	7	122	4	0	2	0	1	271	1	241	4
128			min	28	2	0	7	- 146	3	0	1	0	7	0	7
129		5	max	2 449	7	122	4	0	2	0	1	002	2	0	7
130			min	27	2	0	7	- 146	3	0	1	- 04	3	- 018	2
131	M14	1	max	2 52	7	0	7	0	7	0	1	1 204	1	003	7
132			min	312	2	- 003	2	- 146	1	0	1	0	7	- 008	2
133		2	max	2 502	7	0	7	0	7	0	1	893	1	002	7
134			min	301	2	- 003	2	- 146	1	0	1	0	7	- 001	2
135		3	max	2 485	7	0	7	0	7	0	1	582	1	005	4
136			min	291	2	- 003	2	- 146	1	0	1	0	7	0	1
137		4	max	2 467	7	0	7	0	7	0	1	272	1	012	4
138			min	28	2	- 003	2	- 146	1	0	1	0	7	0	1
139		5	max	2.449	7	0	7	0	7	0	1	0	2	018	2
140			min	27	2	- 003	2	- 146	1	0	1	- 039	3	0	7
141	M15	1	max	1 608	7	0	7	0	7	0	1	856	1	003	7
142			min	238	1	- 003	2	- 096	1	0	1	0	7	- 008	2
143		2	max	1 59	7	0	7	0	7	0	1	652	1	002	7
144			min	227	1	- 003	2	- 096	1	0	1	0	7	- 002	2
145		3	max	1 573	7	0	7	0	7	0	1	447	1	005	4
146			min	216	1	- 003	2	- 096	1	0	1	0	7	0	1
147		4	max	1 555	7	0	7	0	7	0	1	243	1	012	4
148			min	206	1	- 003	2	- 096	1	0	1	0	7	0	1
149		5	max	1 538	7	0	7	0	7	0	1	039	3	018	2
150			min	195	1	- 003	2	- 096	1	0	1	0	2	0	7
151	M16	1	max	1 609	7	122	4	001	2	01	3	863	1	1 019	4
152			min	185	2	0	7	- 099	3	- 011	2	0	7	0	7
153		2	max	1 591	7	122	4	001	2	01	3	653	1	76	4
154			min	175	2	0	7	- 099	3	- 011	2	0	7	0	7
155		3	max	1 573	7	122	4	001	2	01	3	444	1	501	4
156			min	164	2	0	7	- 099	3	- 011	2	0	7	0	7
157		4	max	1 556	7	122	4	001	2	01	3	234	1	241	4
158			min	153	2	0	7	- 099	3	- 011	2	0	7	0	7
159		5	max	1 538	7	122	4	001	2	01	3	025	1	0	7
160			min	143	2	0	7	- 099	3	- 011	2	0	7	- 018	2
161	M17	1	max	146	3	022	3	0	1	018	2	0	1	0	1
162			min	0	2	013	1	0	1	0	7	0	1	0	1
163		2	max	146	3	011	3	0	1	018	2	0	1	- 01	1
164			min	0	2	007	1	0	1	0	7	0	1	- 016	3
165		3	max	146	3	0	1	0	1	018	2	0	1	- 013	1
166			min	0	2	0	1	0	1	0	7	0	1	- 022	3
167		4	max	146	3	- 007	1	0	1	018	2	0	1	- 01	1
168			min	0	2	- 011	3	0	1	0	7	0	1	- 016	3
169		5	max	146	3	- 013	1	0	1	018	2	0	1	0	1
170			min	0	2	- 022	3	0	1	0	7	0	1	0	1
171	M18	1	max	099	3	022	3	0	1	018	2	0	1	0	1
172			min	- 001	2	013	1	0	1	0	7	0	1	0	1
173		2	max	099	3	011	3	0	1	018	2	0	1	- 01	1
174			min	-.001	2	007	1	0	1	0	7	0	1	-.016	3
175		3	max	099	3	0	1	0	1	018	2	0	1	- 013	1
176			min	-.001	2	0	1	0	1	0	7	0	1	- 022	3

Envelope Member Section Forces (Continued)

	Member	Sec		Axial[k]	LC	y Shear[k]	LC	z Shear[k]	LC	Torque[k-ft]	LC	y-y Mome	LC	z-z Moment[k-ft]	LC
177		4	max	099	3	- 007	1	0	1	018	2	0	1	- 01	1
178			min	- 001	2	- 011	3	0	1	0	7	0	1	- 016	3
179		5	max	099	3	- 013	1	0	1	018	2	0	1	0	1
180			min	- 001	2	- 022	3	0	1	0	7	0	1	0	1

Hot Rolled Steel Section Sets

	Label	Shape	Type	Design List	Material	Design Rules	A [in2]	Iyy [in4]	Izz [in4]	J [in4]
1	Horiz Brace	L2X2X4	VBrace	Single Angle	A36 Gr 36	Typical	938	348	348	02
2	BRACE	L3X3X6	VBrace	Single Angle	A36 Gr.36	Typical	2 11	1 76	1 76	103
3	COLUMN	HSS3X3X4	Column	SquareTube	A500 Gr 46	Typical	2 435	3 014	3 014	5 069
4	LANDING	C8X11 5	Beam	Channel	A36 Gr 36	Typical	3 38	1 32	32 6	13
5	STRINGER	C12X30	Beam	Channel	A36 Gr 36	Typical	8 82	5 14	162	87

PUMP STATION STAIR-

DL = 10 PSF + SELF WT
LL = 100 PSF

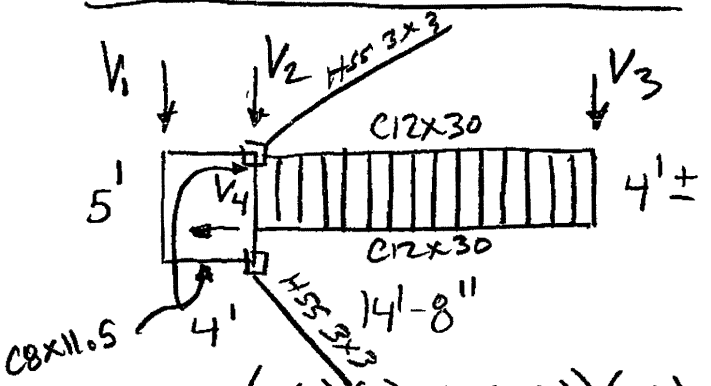

$$V_1 = (4(5)(10) + 12(4))(.46) = 114^{\#}$$

$$V_2 = V_1 + (8(4)(10) + 5(12) + 8(2)(30))(.46)$$

$$= 510^{\#}$$

$$V_3 = 396^{\#}$$

$$V_4 = (15(2)(10) + 15(30))(.46) = 345^{\#}$$

KGA KRAMER GEHLEN ASSOCIATES	PROJECT PDX DEICING PLATFORM STAIRS		
	CLIENT		
CONSULTING ENGINEERS – STRUCTURAL/CIVIL 400 Columbia St 360 / 693-1621 Suite 240 503 / 289-2661 Vancouver WA Fax 360 / 696-1572 98660-3413 www.kga.cc	DATE 8/17/10	DESIGN JB	
	PROJECT NO 10181-00	SHEET ST-27	

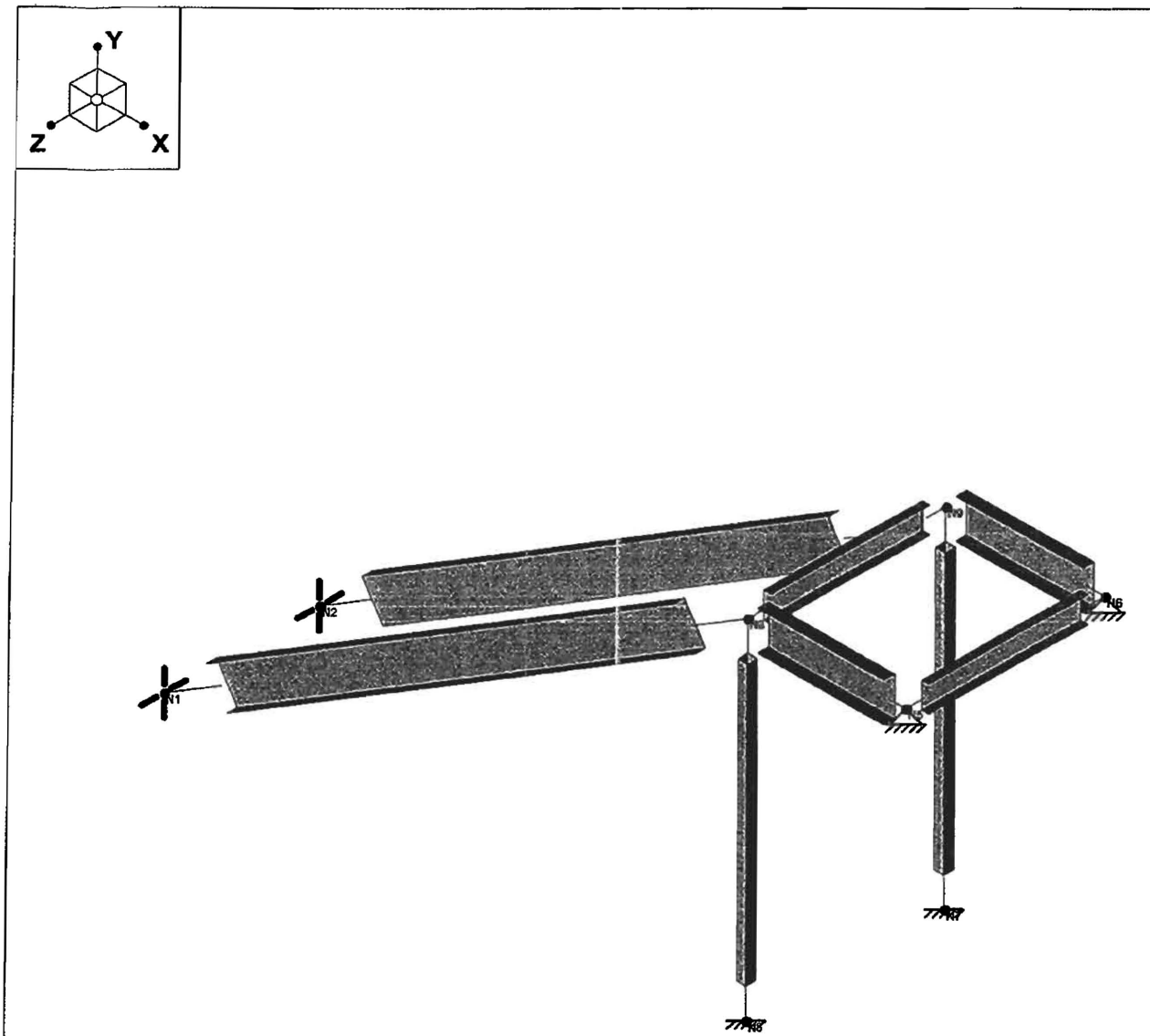

		Sept 1, 2010 at 3 00 PM
		Pump Station Stairs r3d

ST-28

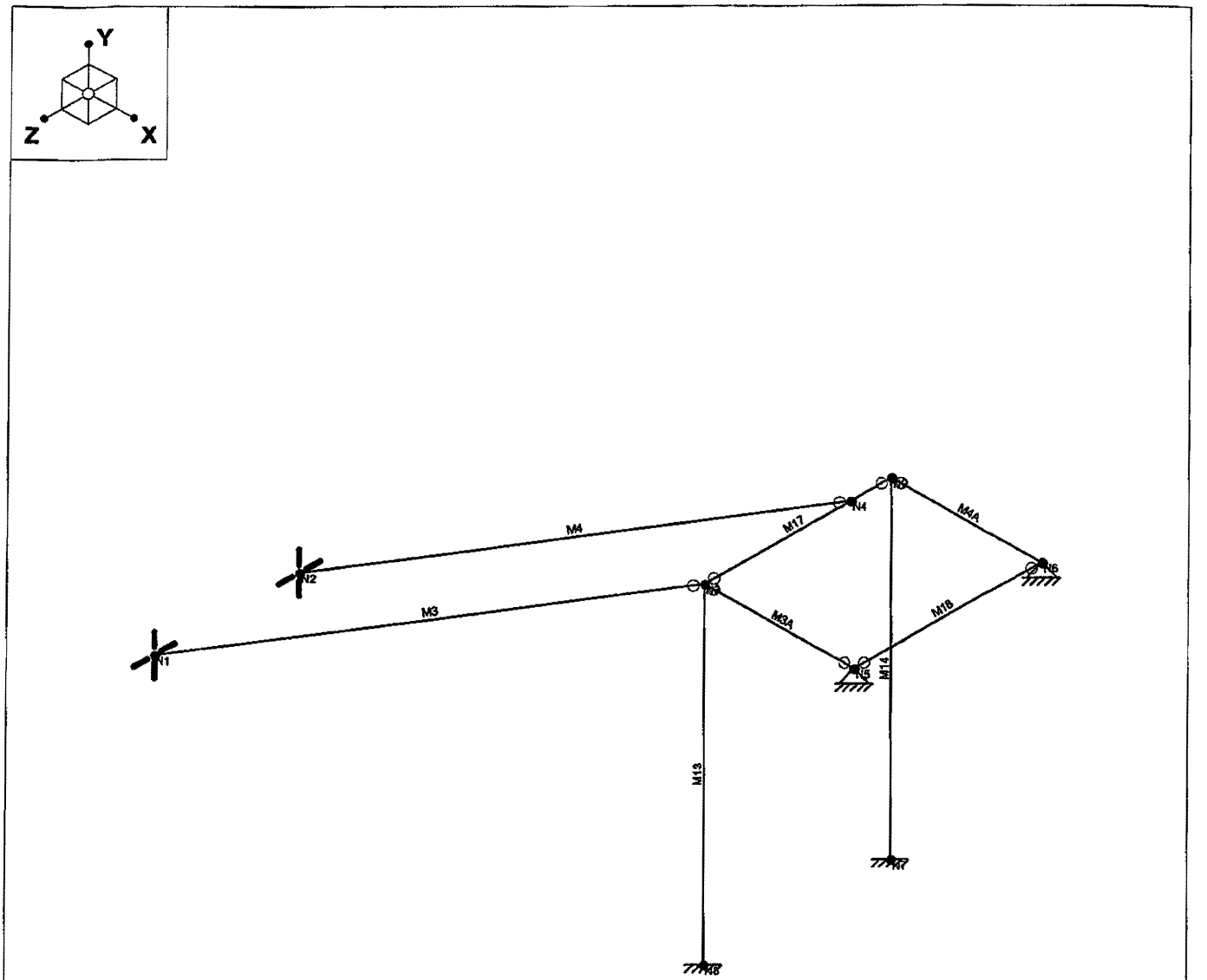

		Sept 1, 2010 at 3 00 PM
		Pump Station Stairs r3d

ST-29

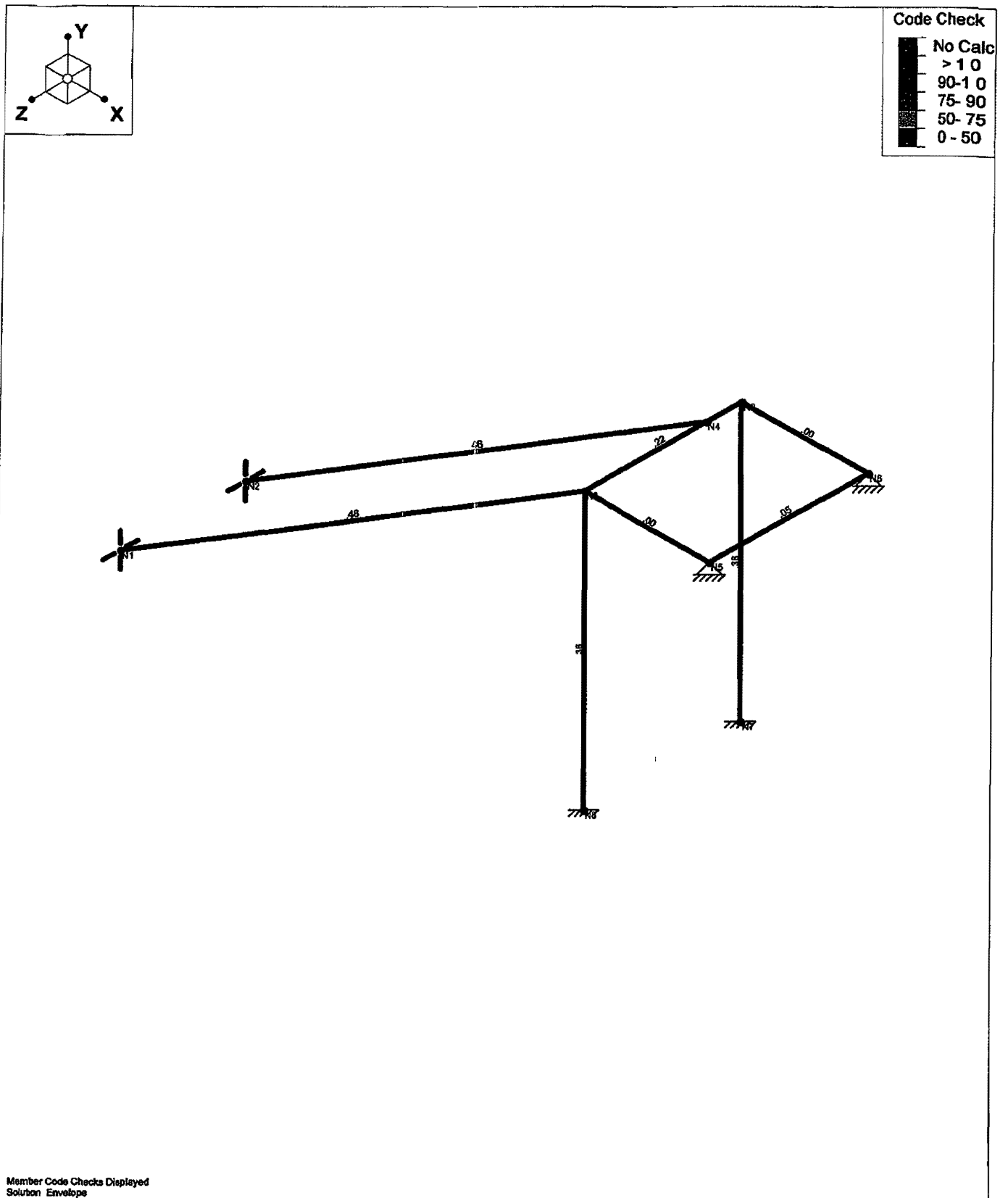

Member Code Checks Displayed
Solution Envelope

		Sept 1, 2010 at 3 00 PM
		Pump Station Stairs r3d

ST-30

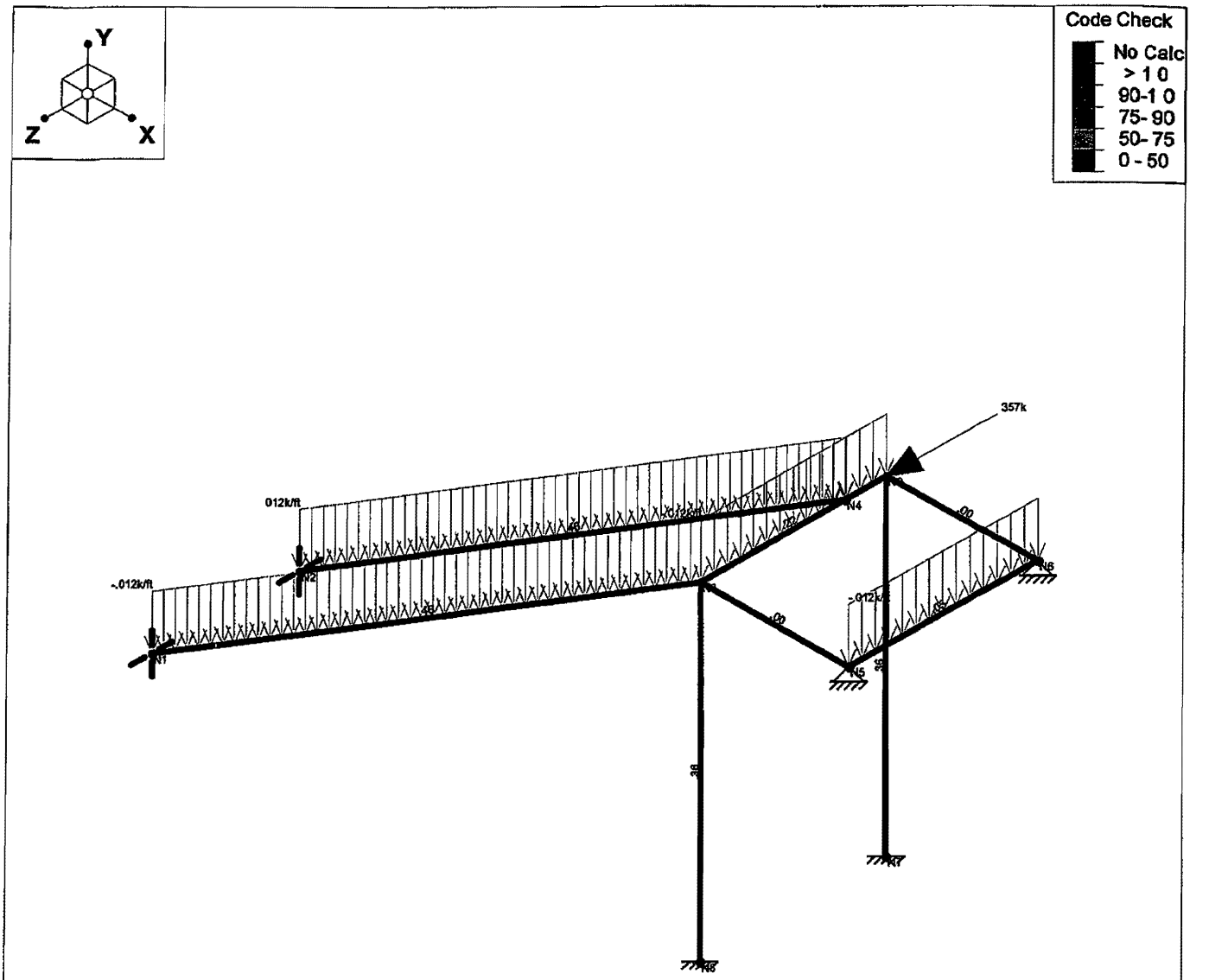

Member Code Checks Displayed
Loads LC 1 6DL+ 7ELz
Solution. Envelope

		Sept 1, 2010 at 3 00 PM
		Pump Station Stairs r3d

ST-31

Basic Load Cases

	BLC Description	Category	X Gravity	Y Gravity	Z Gravity	Joint	Point	Distributed	Area (Me	Surface (
1	DL	DL		-1				4		
2	LL	LL						4		
3	ELx	ELX						2		
4	ELz	ELZ				1				

Joint Boundary Conditions

	Joint Label	X [k/in]	Y [k/in]	Z [k/in]	X Rot.[k-ft/rad]	Y Rot.[k-ft/rad]	Z Rot.[k-ft/rad]	Footing
1	N1		Reaction	Reaction				
2	N2		Reaction	Reaction				
3	N8	Reaction	Reaction	Reaction	Reaction	Reaction	Reaction	
4	N7	Reaction	Reaction	Reaction	Reaction	Reaction	Reaction	
5	N5	Reaction	Reaction	Reaction				
6	N6	Reaction	Reaction	Reaction				

Hot Rolled Steel Design Parameters

	Label	Shape	Length	Lbyy[ft]	Lbzz[ft]	Lcomp to.	Lcomp bo	Kyy	Kzz	Cm-yy	Cm-zz	Cb	y sway	z sway	Function
1	M3	STRING	17 207												Lateral
2	M4	STRING	17 207												Lateral
3	M3A	STRING	4												Lateral
4	M4A	STRING	4												Lateral
5	M13	COLUMN	9												Lateral
6	M14	COLUMN	9												Lateral
7	M17	LANDING	5												Lateral
8	M18	LANDING	5												Lateral

Envelope AISC ASD Steel Code Checks

	Member	Shape	Code C.	Loc[ft]	LC	Shear C	Loc[ft]	Dir	LC	Fa [ksi]	Ft [ksi]	Fb y-y [	Fb z-z [	Cb	Cmy	Cmz	ASD Eqn
1	M3	C12X30	458	8 066	7	021	0	y	7	2 041	21 6	27	7 691	1	6	1	H1-3
2	M4	C12X30	458	8 066	7	021	0	y	7	2 041	21 6	27	7 691	1	6	1	H1-3
3	M3A	C12X30	003	2	4	001	4	y	7	17 15	21 6	27	21 6	1	6	1	H1-3
4	M4A	C12X30	.003	2	4	001	4	y	5	17 15	21 6	27	21 6	1	6	1	H1-3
5	M13	HSS3X3X4	359	0	3	007	0	z	1	14 962	27 6	27 6	27 6	1	6	6	H1-2
6	M14	HSS3X3X4	356	0	3	007	0	z	1	14 962	27 6	27 6	27 6	1	6	6	H1-2
7	M17	C8X11 5	224	3 906	6	089	5	y	7	13 476	21 6	27	21 6	1	6	1	H2-1
8	M18	C8X11 5	049	2 5	7	023	0	y	7	13 476	21 6	27	21 6	1	6	1	H1-1

Envelope Joint Reactions

	Joint		X [k]	LC	Y [k]	LC	Z [k]	LC	MX [k-ft]	LC	MY [k-ft]	LC	MZ [k-ft]	LC
1	N1	max	0	1	2 151	7	0	4	0	1	0	1	0	1
2		min	0	1	258	1	0	1	0	1	0	1	0	1
3	N2	max	0	1	2 151	7	0	7	0	1	0	1	0	1
4		min	0	1	258	1	0	1	0	1	0	1	0	1
5	N8	max	0	1	3 338	7	0	6	0	4	0	1	0	2
6		min	0	2	339	2	- 178	1	-1 606	1	0	4	0	1
7	N7	max	0	1	2 391	7	0	6	0	6	0	1	0	2
8		min	0	2	263	2	- 179	1	-1 607	1	0	1	0	1
9	N5	max	0	1	639	7	0	1	0	1	0	1	0	1
10		min	- 338	4	083	2	0	4	0	1	0	1	0	1
11	N6	max	0	1	639	7	0	1	0	1	0	1	0	1
12		min	- 216	2	083	1	0	6	0	1	0	1	0	1
13	Totals	max	0	1	11 308	7	0	7						

Envelope Joint Reactions (Continued)

	Joint		X [k]	LC	Y [k]	LC	Z [k]	LC	MX [k-ft]	LC	MY [k-ft]	LC	MZ [k-ft]	LC
14		min	- 554	2	1 455	1	- 357	1						

Envelope Joint Displacements

	Joint		X [in]	LC	Y [in]	LC	Z [in]	LC	X Rotation	LC	Y Rotation	LC	Z Rotation [	LC
1	N9	max	0	2	0	2	859	1	1 191e-2	1	0	1	0	1
2		min	0	1	- 004	7	0	6	0	6	0	1	-5 646e-7	2
3	N8	max	0	2	0	2	0	1	0	1	0	4	0	1
4		min	0	1	0	7	0	6	0	4	0	1	0	2
5	N7	max	0	2	0	2	0	1	0	1	0	1	0	1
6		min	0	1	0	7	0	6	0	6	0	1	0	2
7	N6	max	0	2	0	2	0	6	1 191e-2	1	1 79e-2	1	7 773e-5	7
8		min	0	1	0	7	0	1	0	6	0	6	9 301e-6	2
9	N5	max	0	4	0	2	0	4	1 191e-2	1	0	1	7 773e-5	7
10		min	0	1	0	7	0	1	0	4	0	1	9.301e-6	2
11	N4	max	016	4	- 001	2	859	1	4 296e-4	7	8 349e-4	4	0	1
12		min	0	1	- 013	7	0	6	3 475e-5	2	0	1	-6 333e-7	4
13	N3	max	0	4	0	2	859	1	1 191e-2	1	0	4	0	1
14		min	0	1	- 005	7	0	4	0	4	0	1	-8 77e-7	4
15	N2	max	015	2	0	1	0	1	2 232e-3	3	3 197e-4	6	-1 757e-4	1
16		min	- 008	7	0	7	0	7	3 121e-4	7	-3 525e-3	1	-1 467e-3	7
17	N1	max	0	2	0	1	0	1	1 083e-2	1	1 764e-3	1	-1 71e-4	1
18		min	- 003	7	0	7	0	4	0	7	0	7	-1 423e-3	7

Joint Coordinates and Temperatures

	Label	X [ft]	Y [ft]	Z [ft]	Temp [F]	Detach From Dia
1	N9	14 666	9	-5	0	
2	N8	14.6666	0	0	0	
3	N7	14 666	0	-5	0	
4	N6	18.666	9	-5	0	
5	N5	18 666	9	0	0	
6	N4	14 666	9	-3 9	0	
7	N3	14 666	9	0	0	
8	N2	0	0	-3 9	0	
9	N1	0	0	0	0	

Member Distributed Loads (BLC 1 : DL)

	Member Label	Direction	Start Magnitude[k/ft,d	End Magnitude[k/ft,d	Start Location[ft,%]	End Location[ft,%]
1	M3	Y	- 02	- 02	0	0
2	M4	Y	- 02	- 02	0	0
3	M17	Y	- 02	- 02	0	0
4	M18	Y	- 02	- 02	0	0

Member Distributed Loads (BLC 2 : LL)

	Member Label	Direction	Start Magnitude[k/ft,d	End Magnitude[k/ft,d	Start Location[ft,%]	End Location[ft,%]
1	M3	Y	- 2	- 2	0	0
2	M4	Y	- 2	- 2	0	0
3	M17	Y	- 2	- 2	0	0
4	M18	Y	- 2	- 2	0	0

Member Distributed Loads (BLC 3 : ELx)

	Member Label	Direction	Start Magnitude[k/ft,d	End Magnitude[k/ft,d	Start Location[ft,%]	End Location[ft,%]
1	M3	X	023	023	0	0

Member Distributed Loads (BLC 3 : ELx) (Continued)

	Member Label	Direction	Start Magnitude[k/ft,d	End Magnitude[k/ft,d	Start Location[ft,%]	End Location[ft,%]
2	M4	X	023	023	0	0

Joint Loads and Enforced Displacements (BLC 4 : ELz)

	Joint Label	L,D,M	Direction	Magnitude[(k,k-ft), (in,rad), (k*s^2/ft,
1	N9	L	Z	51

Hot Rolled Steel Properties

	Label	E [ksi]	G [ksi]	Nu	Therm (\1E5 F)	Density[k/ft^3]	Yield[ksi]
1	A36 Gr 36	29000	11154	3	65	49	36
2	A572 Gr 50	29000	11154	3	65	49	50
3	A992	29000	11154	3	65	49	50
4	A500 Gr 42	29000	11154	3	65	49	42
5	A500 Gr 46	29000	11154	3	65	49	46

Member Primary Data

	Label	I Joint	J Joint	K Joint	Rotate(deg)	Section/Shape	Type	Design List	Material	Design Rules
1	M3	N1	N3			STRINGER	Beam	Channel	A36 Gr 36	Typical
2	M4	N2	N4		180	STRINGER	Beam	Channel	A36 Gr 36	Typical
3	M3A	N3	N5			STRINGER	Beam	Channel	A36 Gr 36	Typical
4	M4A	N9	N6			STRINGER	Beam	Channel	A36 Gr 36	Typical
5	M13	N8	N3			COLUMN	Column	SquareTube	A500 Gr 46	Typical
6	M14	N7	N9			COLUMN	Column	SquareTube	A500 Gr 46	Typical
7	M17	N3	N9			LANDING	Beam	Channel	A36 Gr 36	Typical
8	M18	N5	N6			LANDING	Beam	Channel	A36 Gr 36	Typical

Envelope Member Section Forces

	Member	Sec		Axial[k]	LC	y Shear[k]	LC	z Shear[k]	LC	Torque[k-ft]	LC	y-y Mome	LC	z-z Moment[k-ft]	LC
1	M3	1	max	1 125	7	1 833	7	0	1	0	1	0	1	0	1
2			min	135	1	22	1	0	1	0	1	0	1	0	1
3		2	max	563	7	917	7	0	1	0	1	0	1	- 71	1
4			min	068	1	11	1	0	1	0	1	0	1	-5 915	7
5		3	max	163	2	0	1	0	1	0	1	0	1	- 947	1
6			min	0	1	0	1	0	1	0	1	0	1	-7 887	7
7		4	max	154	2	- 11	1	0	1	0	1	0	1	- 71	1
8			min	- 563	7	- 917	7	0	1	0	1	0	1	-5 915	7
9		5	max	146	2	- 22	1	0	1	0	1	0	1	0	1
10			min	-1 125	7	-1 833	7	0	1	0	1	0	1	0	1
11	M4	1	max	1 125	7	- 22	1	0	1	0	1	0	1	0	1
12			min	135	1	-1 833	7	0	1	0	1	0	1	0	1
13		2	max	563	7	- 11	1	0	1	0	1	0	1	5 915	7
14			min	068	1	- 917	7	0	1	0	1	0	1	71	1
15		3	max	163	4	0	1	0	1	0	1	0	1	7 887	7
16			min	0	1	0	1	0	1	0	1	0	1	947	1
17		4	max	154	2	917	7	0	1	0	1	0	1	5 915	7
18			min	- 563	7	11	1	0	1	0	1	0	1	71	1
19		5	max	146	2	1 833	7	0	1	0	1	0	1	0	1
20			min	-1 125	7	.22	1	0	1	0	1	0	1	0	1
21	M3A	1	max	338	4	06	4	0	1	0	1	0	1	0	1
22			min	0	1	036	1	0	1	0	1	0	1	0	1
23		2	max	338	4	03	4	0	1	0	1	0	1	- 027	1
24			min	0	1	018	1	0	1	0	1	0	1	- 045	4
25		3	max	338	4	0	1	0	1	0	1	0	1	- 036	1

Envelope Member Section Forces (Continued)

	Member	Sec		Axial[k]	LC	y Shear[k]	LC	z Shear[k]	LC	Torque[k-ft]	LC	y-y Mome	LC	z-z Moment[k-ft]	LC
26			min	0	1	0	1	0	1	0	1	0	1	- 06	4
27		4	max	338	4	- 018	2	0	1	0	1	0	1	- 027	1
28			min	0	1	- 03	7	0	1	0	1	0	1	- 045	4
29		5	max	338	4	- 036	2	0	1	0	1	0	1	0	1
30			min	0	1	- 06	7	0	1	0	1	0	1	0	1
31	M4A	1	max	216	2	.06	3	0	1	0	1	0	1	0	1
32			min	0	1	036	1	0	1	0	1	0	1	0	1
33		2	max	216	2	03	3	0	1	0	1	0	1	- 027	1
34			min	0	1	018	1	0	1	0	1	0	1	- 045	3
35		3	max	216	2	0	1	0	1	0	1	0	1	- 036	1
36			min	0	1	0	1	0	1	0	1	0	1	- 06	3
37		4	max	216	2	- 018	2	0	1	0	1	0	1	- 027	1
38			min	0	1	- 03	5	0	1	0	1	0	1	- 045	3
39		5	max	216	2	- 036	2	0	1	0	1	0	1	0	1
40			min	0	1	- 06	5	0	1	0	1	0	1	0	1
41	M13	1	max	3 338	7	0	4	0	2	0	1	1 606	1	0	4
42			min	339	2	0	1	- 178	1	0	1	0	2	0	1
43		2	max	3 319	7	0	4	0	2	0	1	1 205	1	0	2
44			min	328	2	0	1	- 178	1	0	1	0	2	0	1
45		3	max	3 3	7	0	4	0	2	0	1	803	1	0	4
46			min	.317	2	0	1	- 178	1	0	1	0	2	0	1
47		4	max	3 282	7	0	4	0	2	0	1	402	1	0	2
48			min	306	2	0	1	- 178	1	0	1	0	2	0	1
49		5	max	3 263	7	0	4	0	2	0	1	0	1	0	1
50			min	295	2	0	1	- 178	1	0	1	0	1	0	4
51	M14	1	max	2 391	7	0	2	0	2	0	1	1 607	1	0	2
52			min	263	2	0	1	- 179	1	0	1	0	2	0	1
53		2	max	2 372	7	0	2	0	2	0	1	1 205	1	0	2
54			min	252	2	0	1	- 179	1	0	1	0	2	0	1
55		3	max	2 354	7	0	2	0	2	0	1	803	1	0	2
56			min	241	2	0	1	- 179	1	0	1	0	2	0	1
57		4	max	2 335	7	0	2	0	2	0	1	402	1	0	2
58			min	23	2	0	1	- 179	1	0	1	0	2	0	1
59		5	max	2 317	7	0	2	0	2	0	1	0	1	0	2
60			min	218	2	0	1	- 179	1	0	1	0	1	0	1
61	M17	1	max	178	1	1 052	7	0	1	0	4	0	1	0	1
62			min	0	2	085	2	- 061	4	0	1	0	1	0	1
63		2	max	178	1	763	7	0	1	0	4	0	1	- 092	2
64			min	0	2	062	2	- 061	4	0	1	- 076	4	-1 134	7
65		3	max	178	1	473	7	0	1	0	4	0	1	- 154	2
66			min	0	2	038	2	- 061	4	0	1	- 152	4	-1 906	7
67		4	max	178	1	184	7	0	1	0	4	0	1	- 187	2
68			min	0	2	014	2	- 061	4	0	1	- 229	4	-2 317	7
69		5	max	178	1	- 182	2	216	2	0	4	0	1	0	1
70			min	0	2	-2.257	7	0	1	0	1	0	1	0	1
71	M18	1	max	0	1	579	7	0	1	0	1	0	1	0	1
72			min	0	1	047	1	0	1	0	1	0	1	0	1
73		2	max	0	1	289	7	0	1	0	1	0	1	- 044	1
74			min	0	1	024	1	0	1	0	1	0	1	- 543	7
75		3	max	0	1	0	1	0	1	0	1	0	1	- 059	1
76			min	0	1	0	1	0	1	0	1	0	1	- 723	7
77		4	max	0	1	- 024	1	0	1	0	1	0	1	- 044	1
78			min	0	1	- 289	7	0	1	0	1	0	1	- 543	7
79		5	max	0	1	- 047	1	0	1	0	1	0	1	0	1
80			min	0	1	- 579	7	0	1	0	1	0	1	0	1

Hot Rolled Steel Section Sets

	Label	Shape	Type	Design List	Material	Design Rules	A [in2]	Iyy [in4]	Izz [in4]	J [in4]
1	Horiz Brace	L2X2X4	VBrace	Single Angle	A36 Gr 36	Typical	938	348	348	02
2	BRACE	L3X3X6	VBrace	Single Angle	A36 Gr 36	Typical	2 11	1 76	1 76	103
3	COLUMN	HSS3X3X4	Column	SquareTube	A500 Gr 46	Typical	2 435	3 014	3.014	5 069
4	LANDING	C8X11 5	Beam	Channel	A36 Gr 36	Typical	3 38	1 32	32 6	13
5	STRINGER	C12X30	Beam	Channel	A36 Gr 36	Typical	8 82	5 14	162	87

REACTOR PIT STAIR DESIGN –

WT GRATING = 10 PSF

$w = 1.5(10) = 15$ PLF + SELF WT

$1.5(100) = 150$ PLF

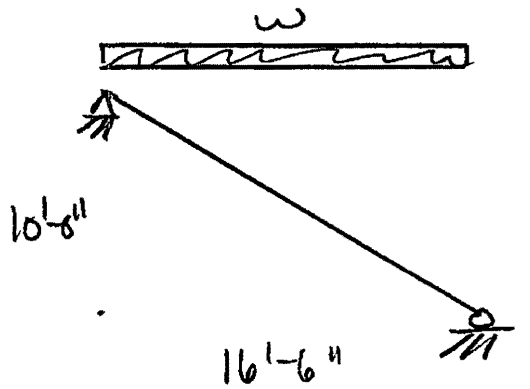

⇒ USE C12X20.7 MIN

GRATING SUPPORT ANGLE –

L2X2X3/16 –

$P = 165^{\#}$ OVER 6"

$M = 1(165) = 165$ IN-LBS

$S_{REQ'D} = \frac{165}{.6(36000)} = .0076\ IN^3$

$S_{ACT} = \frac{6(3/16)^2}{6} = .035\ IN^3$

⇒ L2X2X 3/16 ANGLE OK

STRINGER TO WALL –

$V = 1280^{\#}$

$M = 1280(2) = 2560$ IN-LBS

⇒ USE 2 – 1/2 X 3 1/4 EMBED SS THLT KB-TZ @ 3" OC

3" MIN EDGE DISTANCE

KGA KRAMER GEHLEN ASSOCIATES	PROJECT PDX DEICING PLATFORM STAIRS		
	CLIENT		
CONSULTING ENGINEERS – STRUCTURAL/CIVIL 400 Columbia St 360 / 693-1621 Suite 240 503 / 289-2661 Vancouver WA Fax 360 / 696 1572 98660-3413 www.kga.cc	DATE 8/11/10	DESIGN JB	
	PROJECT NO 10181-00	SHEET ST-37	

Project 10-181 PDX Deicing
Location Reactor Pit Stair Stringer
Multi-Loaded Multi-Span Beam
[2006 International Residential Code(AISC 13th Ed ASD)]
A36 C12x20 7 x 16 5 FT (Actual 19 3 FT)
Section Adequate By 138 3%
Controlling Factor Moment

Justin Berg
Kramer Gehlen & Associates, Inc
400 Columbia Street, suite 240
vancouver, WA 98660

StruCalc Version 8 0 101 0 9/1/2010 2 56 34 PM

DEFLECTIONS	Center	
Live Load	0 09	IN L/2166
Dead Load	0 03	in
Total Load	0 12	IN L/1694

Live Load Deflection Criteria L/360 Total Load Deflection Criteria L/240

REACTIONS	A	B
Live Load	1238 lb	1238 lb
Dead Load	344 lb	344 lb
Total Load	1582 lb	1582 lb
Bearing Length	1 13 in	1 13 in

BEAM DATA	Center
Span Length	16 5 ft
Unbraced Length-Top	16 5 ft
Unbraced Length-Bottom	16 5 ft
Beam End Elevation Difference	10 ft

LOADING DIAGRAM

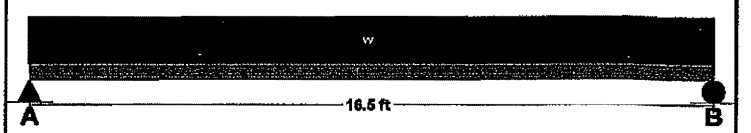

UNIFORM LOADS	Center
Uniform Live Load	150 plf
Uniform Dead Load	15 plf
Beam Self Weight	21 plf
Total Uniform Load	186 plf

STEEL PROPERTIES
C12x20 7 - A36

Properties			
Yield Stress	Fy =	36	ksi
Modulus of Elasticity	E =	29000	ksi
Depth	d =	12	in
Web Thickness	tw =	0 28	in
Flange Width	bf =	2 94	in
Flange Thickness	tf =	0 5	in
Distance to Web Toe of Fillet:	k =	1 13	in
Moment of Inertia About X-X Axis	Ix =	129	in4
Section Modulus About X-X Axis	Sx =	21 5	in3
Plastic Section Modulus About X-X Axis	Zx =	25 6	in3
Design Properties per AISC 13th Edition Steel Manual			
Flange Buckling Ratio	FBR =	2 93	
Allowable Flange Buckling Ratio	AFBR =	10 79	
Web Buckling Ratio	WBR =	34 54	
Allowable Web Buckling Ratio	AWBR =	106 72	
Controlling Unbraced Length	Lb =	19 29	ft
Limiting Unbraced Length -			
for lateral-torsional buckling	Lp =	3.32	ft
for Eqn F2-2	Lr =	12 13	ft
Elastic lateral-torsional buckling stress	Fcr =	14 5	ksi
Nominal Flexural Strength w/ safety factor	Mn =	15552	ft-lb
Controlling Equation	F2-3		
Web height to thickness ratio	h/tw =	34 54	
Limiting height to thickness ratio for eqn G2-2	h/tw-limit =	63 58	
Cv Factor	Cv =	1	
Controlling Equation	G2-3		
Nominal Shear Strength w/ safety factor	Vn =	43769	lb

Controlling Moment 6525 ft-lb
8 253 Ft from left support of span 2 (Center Span)
Created by combining all dead loads and live loads on span(s) 2
Controlling Shear 1353 lb
At left support of span 2 (Center Span)
Created by combining all dead loads and live loads on span(s

Comparisons with required sections	Req'd	Provided
Moment of Inertia (deflection)	18 34 in4	129 in4
Moment	6525 ft-lb	15552 ft-lb
Shear	1353 lb	43769 lb

NOTES

ST-38

Company		Page	1
Specifier		Project.	PDX Deicing Platform
Address		Sub-Project I Pos No	Reactor Pit Stair
Phone I Fax	- | -	Date	8/12/2010
E-Mail			

Specifier's comments: Anchors

Input data

Anchor type and diameter	**Kwik Bolt TZ - SS 316, 1/2 (3 1/4)**
Effective embedment depth	h_{ef} = 3 250 in
Material	AISI 316
Evaluation Service Report	ESR 1917
Issued I Valid	9/1/2007 | -
Proof	design method ACI 318 / AC 193
Stand-off installation	e_b = 0 000 in (no stand-off), t = 0 375 in
Anchor plate	l_x x l_y x t = 4 000 x 5 500 x 0 375 in (Recommended plate thickness not calculated)
Profile	no profile
Base material	cracked concrete , 4000, f_c' = 4000 psi, h = 14 000 in
Reinforcement	condition B, no supplemental splitting reinforcement present edge reinforcement none or < No 4 bar

Geometry [in]

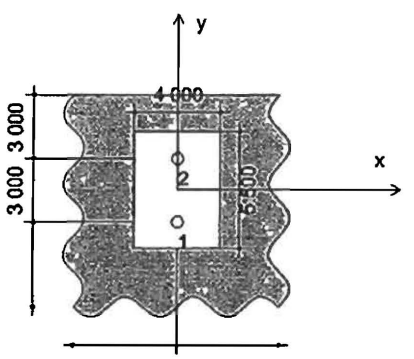

Loading [lb, in -lb]

Governing loads

N = 0	V_y = -2560
M_z= 0 000	M_y = 0 000

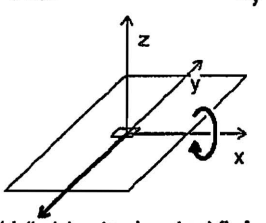

Eccentricity (structural section) [in]

e_x = 0 000	V_x = 0
e_y = 0 000	M_x = 2560 000

Proof I Utilization (Governing Cases)

		Design values [lb]		Utilization [%]	
Loading	Proof	Load	Capacity	β_N/β_V	Status
Tension	Concrete Breakout Strength	674	2926	23 / -	OK
Shear	Steel Strength (without lever arm)	1280	4472	- / 29	OK

Loading	β_N	β_V	ζ	Utilization β_{NV}[%]	Status
Combined tension and shear loads	0 231	0 294	5/3	22	OK

Warnings

- Please consider all details and hints/warnings given in the detailed report!

Fastening meets the design criteria!

PROFIS Anchor (c) 2003-2009 Hilti AG, FL-9494 Schaan Hilti is a registered Trademark of Hilti AG Schaan

ST-39

COLUMN – ANCHORAGE – MEZZ STAIRS

$f'_c = 3000$ psi
SLAB = 6"

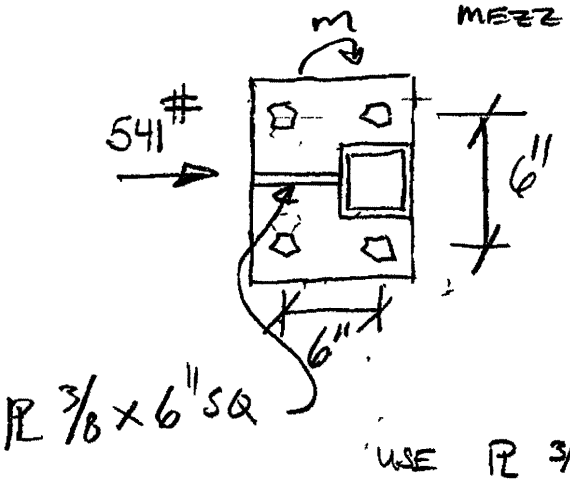

$M = 2.68^{K\text{-}FT}$ – WORST CASE

$m_u = \frac{2.68}{.7}(1.3) = 5972$ IN-LBS

$P = 430^{\#}$

$SHEAR = \frac{322^{\#}}{.7}(1.3) = 598^{\#}$

USE PL 3/4" x 9" SQ

⇒ USE 4 – 3/4" x 3 3/4 EMBED HILTI KB-TZ SS316 STAINLESS STEEL.

UPPER LANDING – KICKER ATTACHMENT

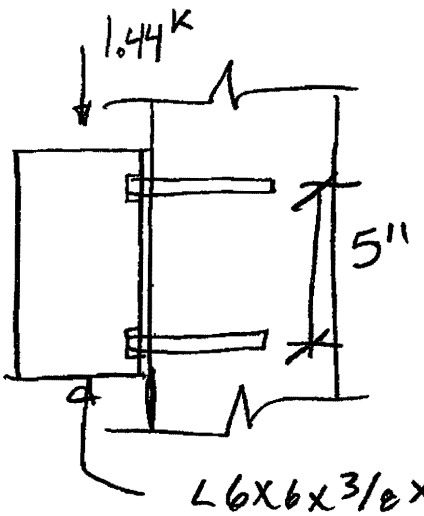

TRY 3/4" x 6 SIMP TITEN HD

$V_{AU} = 2085(.62) = 1293^{\#}$

$2 = 2595^{\#} >> 1440$

⇒ USE 2 – 5/8"ø x 6 TITEN HD (MECH. GALV.) @ 5" oc, PROVIDE SOLID GROUTED CELLS OR VERIFY SOLID GROUT BEFORE INSTALLATION.

KGA
KRAMER GEHLEN ASSOCIATES
CONSULTING ENGINEERS – STRUCTURAL/CIVIL
400 Columbia St
Suite 240
Vancouver, WA
98660-3413
360 / 693-1621
503 / 289-2661
Fax. 360 / 696 1572
www kga cc

PROJECT PDX DEICING PLATFORM STAIRS
CLIENT

DATE	DESIGN
8/13/10	JB
PROJECT NO 10181	SHEET ST-40

Company		Page	1
Specifier		Project	PDX Deicing Platform
Address		Sub-Project I Pos No	Treatment Room
Phone I Fax	- | -	Date	8/17/2010
E-Mail			

Specifier's comments Column Anchors

Input data

Anchor type and diameter	**Kwik Bolt TZ - SS 316, 3/4 (3 3/4)**
Effective embedment depth	h_{ef} = 3 750 in
Material	AISI 316
Evaluation Service Report	ESR 1917
Issued I Valid	9/1/2007 | -
Proof	design method ACI 318 / AC 193
Stand-off installation	e_b = 0 000 in (no stand-off), t = 0 375 in
Anchor plate	l_x x l_y x t = 10 000 x 9 000 x 0 375 in (Recommended plate thickness not calculated)
Profile	Square HSS (AISC), (L x W x T) = 3 000 in x 3 000 in x 0 250 in
Base material	cracked concrete , 4000, f_c' = 4000 psi, h = 6 000 in
Reinforcement	condition A, no supplemental splitting reinforcement present edge reinforcement none or < No 4 bar

Geometry [in]

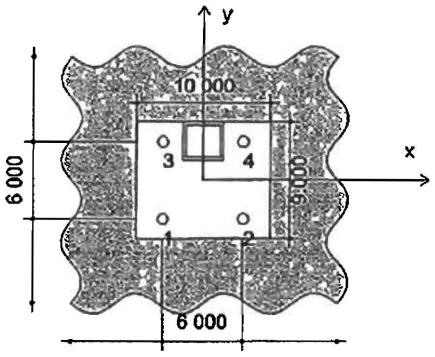

Loading [lb, in -lb]

Governing loads

N = 0 V_y = 598

M_z = 0 000 M_y = 0 000

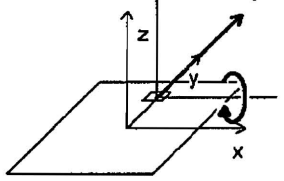

Eccentricity (structural section) [in]

e_x = 0 000 V_x = 0

e_y = 3 000 M_x = 59725 000

Proof I Utilization (Governing Cases)

		Design values [lb]		Utilization [%]	
Loading	Proof	Load	Capacity	β_N/β_V	Status
Tension	Concrete Breakout Strength	8935	9507	94 / -	OK
Shear	Steel Strength (without lever arm)	149	7125	- / 2	OK

Loading	β_N	β_V	ζ	Utilization $\beta_{N,V}$[%]	Status
Combined tension and shear loads	0 940	0 021	-	80	OK

Warnings

- Please consider all details and hints/warnings given in the detailed report!

Fastening meets the design criteria!

PROFIS Anchor (c) 2003-2009 Hilti AG, FL-9494 Schaan Hilti is a registered Trademark of Hilti AG Schaan

TANK PLATFORM DESIGN -

SEISMIC $R = 3 \Rightarrow V = \frac{.77}{3} = .256W$ (ULT)

LOADS - 40 PSF LL - CATWALK
10 PSF DL + SELF WT

1 1/2" GRATING

SEISMIC FOR SELF WT IS CALCULATED BY RISA.
APPLY LOAD FOR WT OF GRATING.

CONNECTION DESIGN - Bm TO CMU WALL

REACTIONS - SHEAR = 1.045 K
TENSION = 1.412 K

SEPERATE LOAD CASES BUT COMBINE.

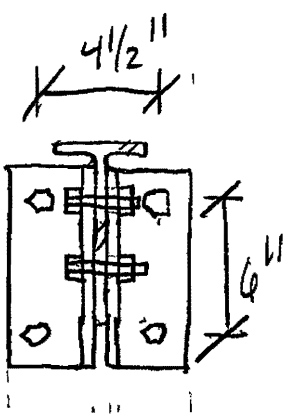

USE 5/8 x 5 SMP TITEN HD $T_{ALL} = 1060$ #
$V_{ALL} = 2085$ #

ADJUSTMENT FACTORS FOR 4 1/2" SPACING T = .53
V = .60

$T_{ALL} = 4(1060)(.53) = 2250$ #
$V_{ALL} = 4(2085)(.6) = 5004$ #

$\left(\frac{1045}{2250} + \frac{1412}{5004}\right) = .75 < 1.0 \Rightarrow$

USE 4 - 1/2" X 5 MECH GALV. TITEN HD

KGA KRAMER GEHLEN ASSOCIATES	PROJECT PDX DEICING PLATFORM		
	CLIENT		
CONSULTING ENGINEERS – STRUCTURAL/CIVIL 400 Columbia St 360 / 693-1621 Suite 240 503 / 289-2661 Vancouver, WA Fax 360 / 696-1572 98660-3413 www.kga.cc	DATE 8/20/10	DESIGN JB	
	PROJECT NO 10181	SHEET TPF-1	

CMU WALL ANCHORAGE - CATWALK AT STAIR

NODE N5 ON RISA - $T = 6147^{\#}$
$V = 439^{\#}$

3/4"ø HDG THRD ROD - HILTI HY150 MAX

$T_{ALL} = 2440^{\#}$
$V_{ALL} = 2785^{\#}$ @ 8"oc

ANCHOR CHECK — $\frac{6147}{4(2440)} + \frac{439}{4(2785)} = .67 < 1.0 \Rightarrow$ OK

CHECK PL THICKNESS -

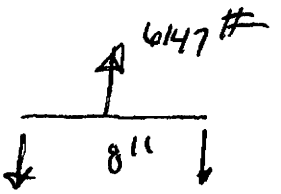

$M = \frac{6147(8)}{4} = 12294$ IN-LBS

$S_{REQ'D} = \frac{12294}{.6(36000)} = .569\ IN^3$

$\Rightarrow \frac{11t^2}{6} = .569 \Rightarrow t_{MIN} = .557"$

$\Rightarrow$ USE 5/8" x 11" SQ PL.

KGA KRAMER GEHLEN ASSOCIATES	PROJECT PDX DEICING PLATFORM		
	CLIENT		
CONSULTING ENGINEERS – STRUCTURAL/CIVIL 400 Columbia St 360 / 693-1621 Suite 240 503 / 289-2661 Vancouver WA Fax 360 / 696 1572 98660-3413 www.kga.cc	DATE 8/24/10	DESIGN JB	
	PROJECT NO 10181	SHEET TPF-2	

TABLE 5—ALLOWABLE TENSION AND SHEAR VALUES FOR THREADED RODS INSTALLED USING HILTI HIT HY 150 MAX ADHESIVE IN GROUT-FILLED CONCRETE MASONRY CONSTRUCTION (pounds)[1,2,3,4,8,9]

Anchor diameter (inches)	3/8		1/2		5/8		3/4	
Embedment (inches)[5]	3 3/8		4 1/2		5 5/8		6 3/4	
Minimum anchor spacing (inches) s_{min}[1]	4		4		4		4	
Critical anchor spacing (inches) s_{cr}[1]	8		8		8		8	
Load direction	Tension	Shear[7]	Tension	Shear[7]	Tension	Shear[7]	Tension	Shear[7]
Minimum edge distance, 4 inches, c_{min}[6]	880	1,135	1,055	1,745	1,370	2,120	1,580	2,205
Critical edge distance, 20 inches, c_{cr}[6]	950		1,265	1,870	1,850	2,590	2,440	2,785

For SI 1 inch = 25 4 mm, 1 lbf = 4 45 N

[1]Anchors are limited to one per masonry cell Anchors in adjacent cells may be spaced apart as close as 4 inches with a load reduction of 30% For anchors in adjacent cells spaced apart between 4 inches (s_{min}) and 8 inches (s_{cr}), use linear interpolation
[2]Anchors may be installed in any location in the face of the masonry wall (cell, bed joint, or web) as shown in Figure 1, except anchor must not be installed in or within 1 inch of a head joint
[3]Allowable load values are for use in any masonry construction complying with Section 3 2 3 of this report
[4]When anchors are used to resist short-term loads such as wind or seismic, allowable loads must be adjusted in accordance with Section 4 1 3 and Table 3, of this report, but the loads cannot exceed 2,400 pounds for tension and 3,000 pounds for shear
[5]Embedment depth is measured from the outside face of the masonry
[6]Edge distances must be 4 inches minimum Linear interpolation for edge distances between 4 inches (c_{min}) and 20 inches (c_{cr}) is allowed Edge distance to top of wall must be greater than 12 inches
[7]Allowable shear loads must be the lesser of the adjusted masonry or bond tabulated values and the steel values given in Table 7
[8]The tabulated allowable loads have been calculated based on a safety factor of 5 0
[9]Concrete masonry thickness must be equal to or greater than 1 5 times the anchor embedment depth **EXCEPTION** The 5/8-inch- and 3/4-inch-diameter anchors may be installed in minimum nominally 8-inch thick concrete masonry

TABLE 6—ALLOWABLE TENSION AND SHEAR VALUES FOR SILL PLATE AND OTHER ATTACHMENTS TO TOPS OF GROUT-FILLED MASONRY WALLS AT MINIMUM EDGE DISTANCES AND USING HILTI HIT HY 150 MAX ADHESIVE (pounds)[1,2,3,4,5,6]

ANCHOR DIAMETER (inch)	EMBEDMENT DEPTH (inches)	EDGE DISTANCE (inches)	TENSION	SHEAR	
				Load Applied Perpendicular to Edge	Load Applied Parallel to Edge
1/2	4 1/2	1 3/4	1,095	295	815
5/8	5 5/8	1 3/4	1,240	400	965

For SI. 1 inch = 25 4 mm, 1 lbf = 4 45 N, 1 psi = 6 89 kPa

[1]Loads in this table are for threaded rod complying with Section 3 2 2 installed in the masonry at the edge distance shown in this table No reductions for edge distance are required when anchors are installed with the minimum edge distance specified in the table Capacity of attached sill plate or other material to resist loads in this table must comply with the applicable code
[2]Edge distances are given in this table Anchor spacing must conform to the dimensions given in Table 5
[3]When anchors are used to resist short-term loads such as wind or seismic, allowable loads must be adjusted in accordance with Section 4 1 3 and Table 3, of this report
[4]Masonry thickness must be equal to or greater than 1 5 times the anchor embedment depth
[5]The tabulated values are for anchors installed in any masonry complying with Section 3 2 3 of this report
[6]Allowable loads calculated using a safety factor of 5 0

TABLE 7—ALLOWABLE TENSION AND SHEAR VALUES FOR THREADED RODS (pounds)[1,2]

ANCHOR DIAMETER (inch)	TENSION BASED ON STEEL STRENGTH			SHEAR BASED ON STEEL STRENGTH		
	ISO 898 Class 5 8	ASTM A 193 B7	ASTM I 593 CW (316/304)	ISO 898 Class 5 8	ASTM A 193 B7	ASTM I 593 CW (316/304)
3/8	2,640	4,555	3,645	1,360	2,345	1,875
1/2	4,700	8,100	6,480	2,420	4,170	3,335
5/8	7,340	12,655	10,125	3,780	6,520	5,215
3/4	10,570	18,225	12,390	5,445	9,390	6,385

For SI 1 inch = 25 4 mm, 1 lbf = 4 45 N, 1 psi = 6 89 kPa

[1]Allowable load must be the lesser of bond values given in Table 5 and Table 6 and tabulated steel values
[2]The allowable tension and shear values for threaded rods to resist short-term loads, such as wind or seismic, must be calculated in accordance with Section 4 1 3 and Table 3, of this report

IPF-3

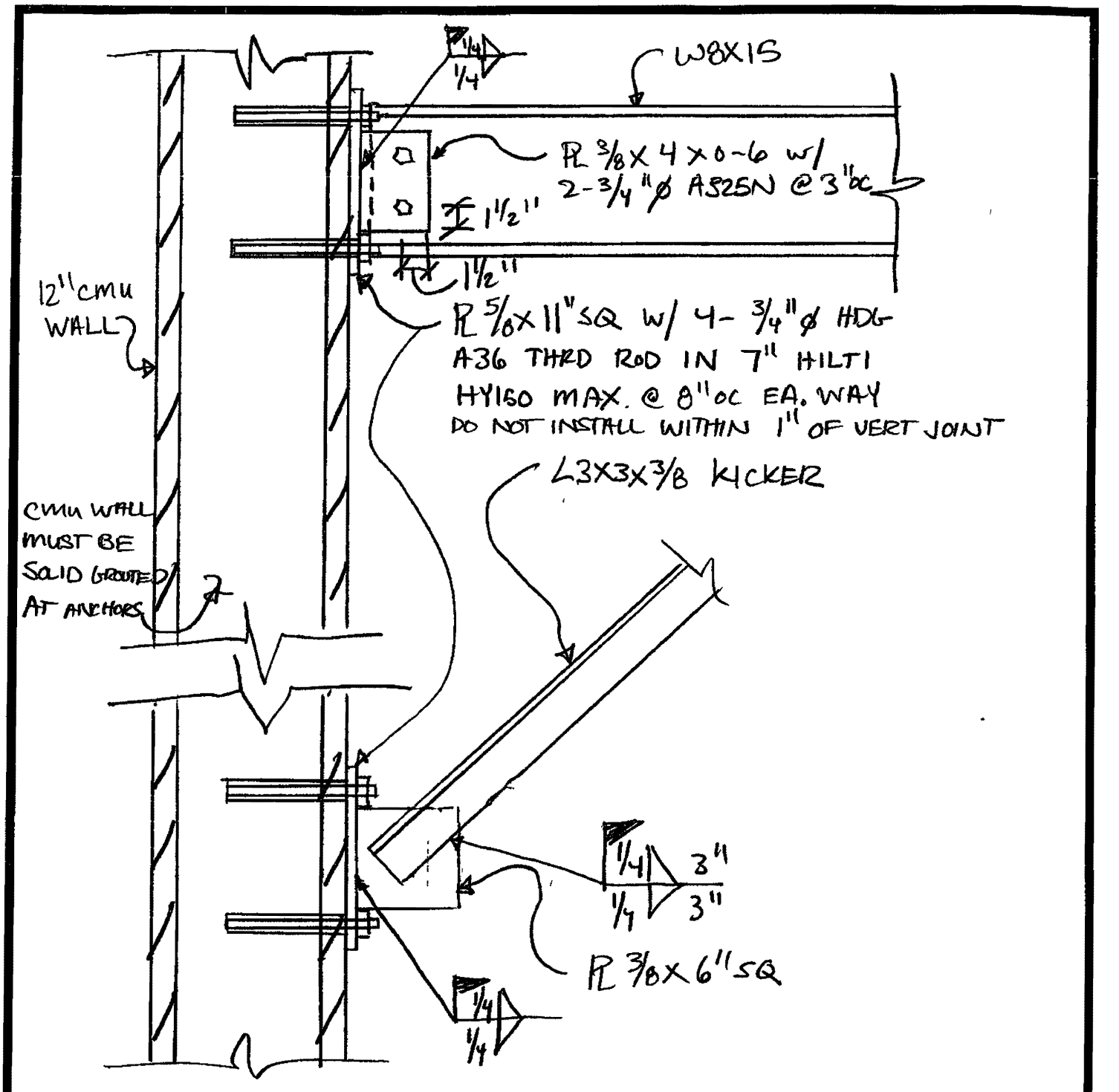

KRAMER GEHLEN ASSOCIATES

PROJECT PDX DEICING PLATFORM

CLIENT

CONSULTING ENGINEERS – STRUCTURAL/CIVIL
400 Columbia St
Suite 240
Vancouver, WA
98660-3413
360 / 693-1621
503 / 289-2661
Fax 360 / 696-1572
www.kga cc

DATE	DESIGN
8/24/10	JB
PROJECT NO	SHEET
10181-00	PPF-4

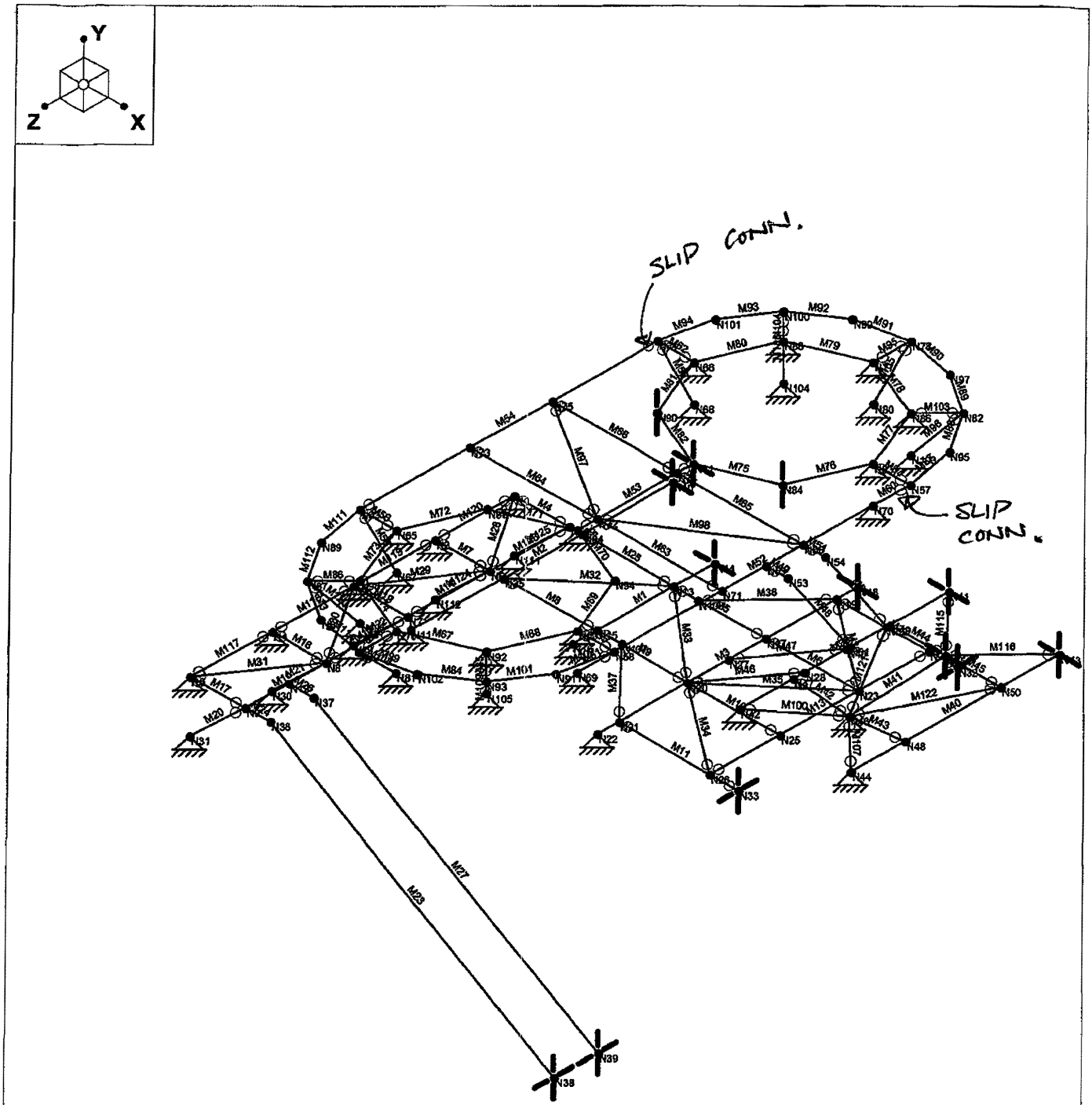

Results for LC 7, DL+LL

		Sept 1, 2010 at 1 51 PM
		PDX Deicing Platform r3d

TPF-5

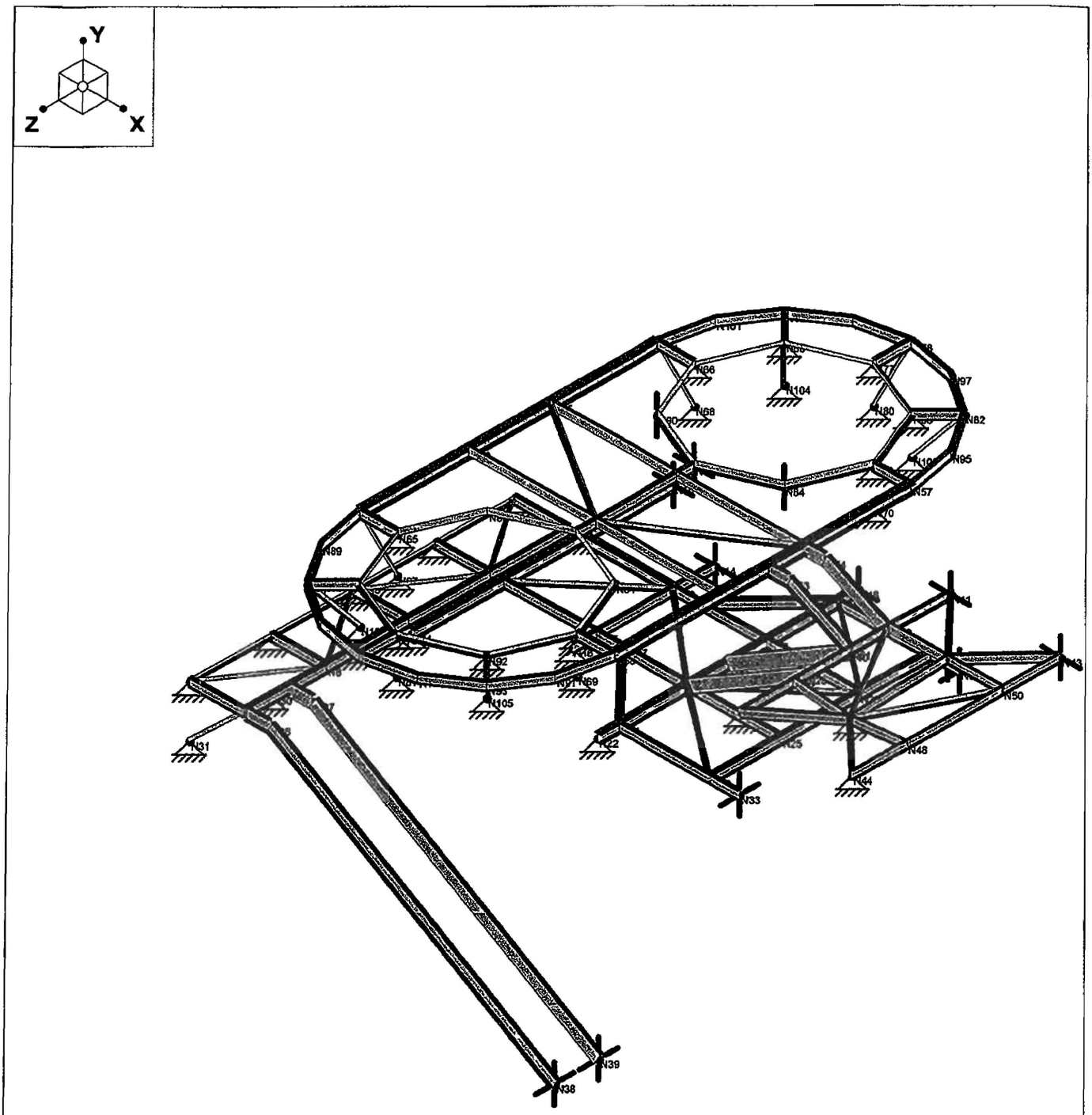

Solution Envelope

		Sept 1, 2010 at 1 56 PM
		PDX Deicing Platform r3d

TPF-6

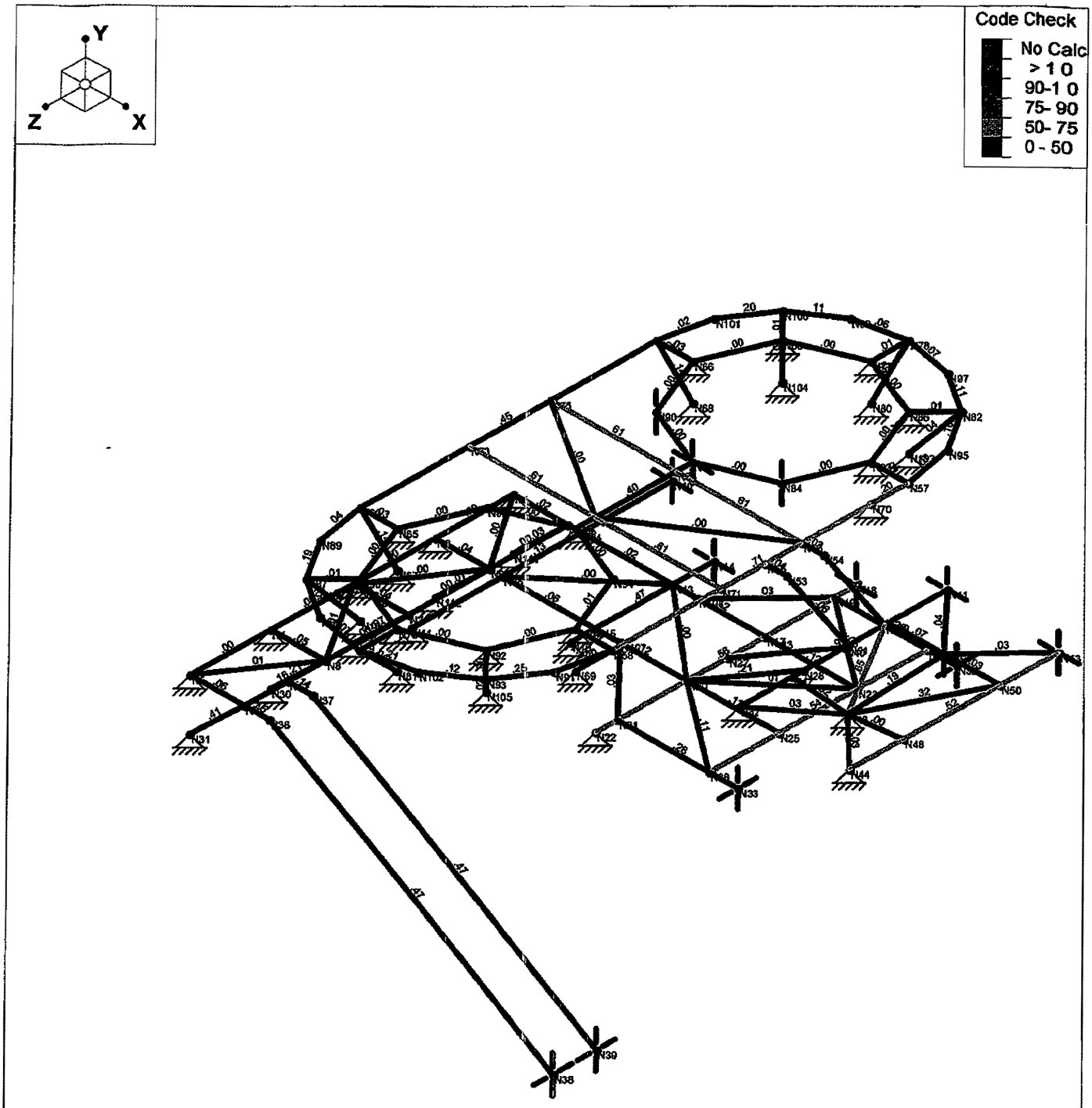

Member Code Checks Displayed
Results for LC 7 DL+LL

		Sept 1, 2010 at 1 52 PM
		PDX Deicing Platform r3d

TPF-7

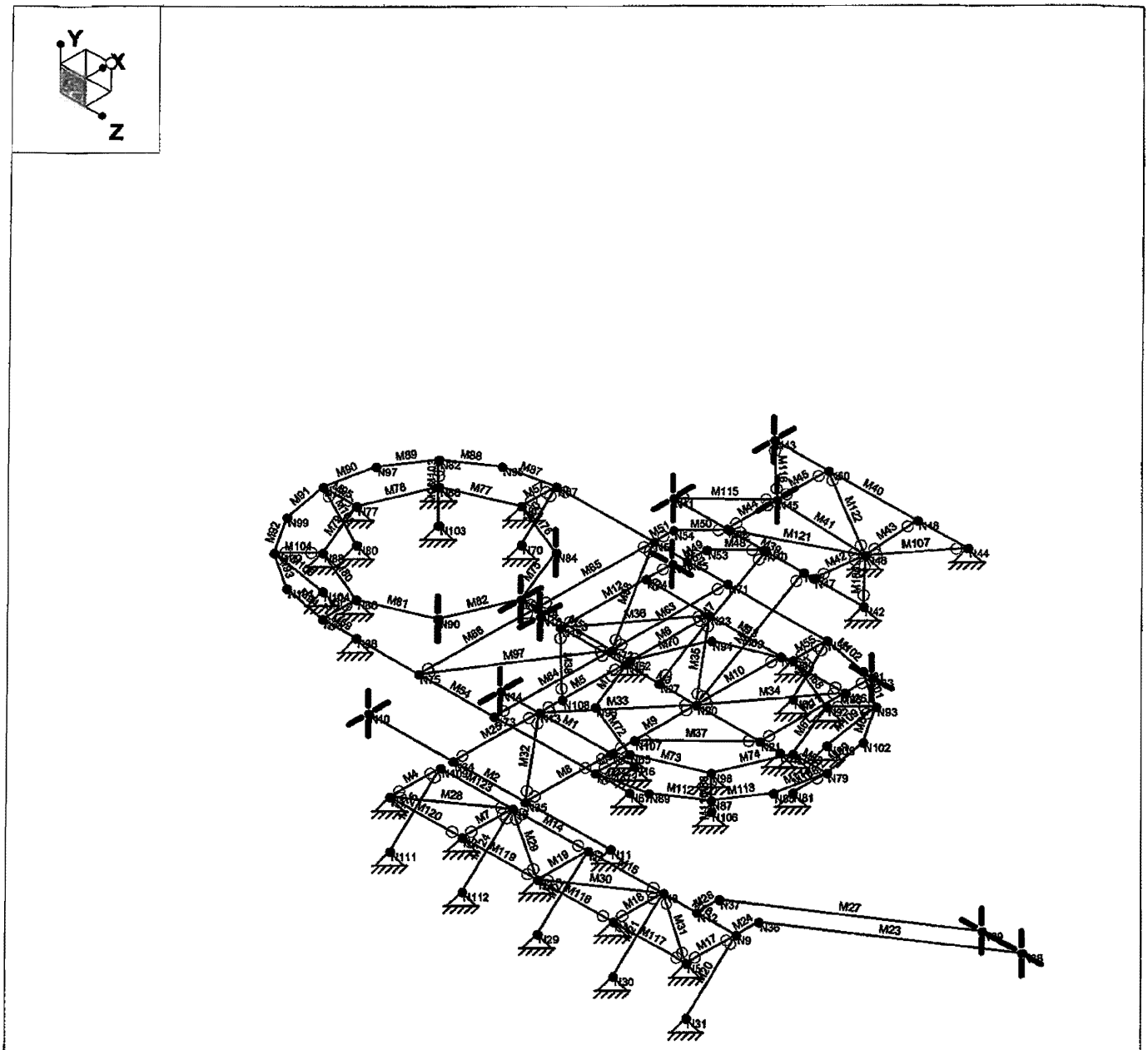

Results for LC 7 DL+LL

		Sept 1, 2010 at 1:52 PM
		PDX Deicing Platform r3d

TPF-0

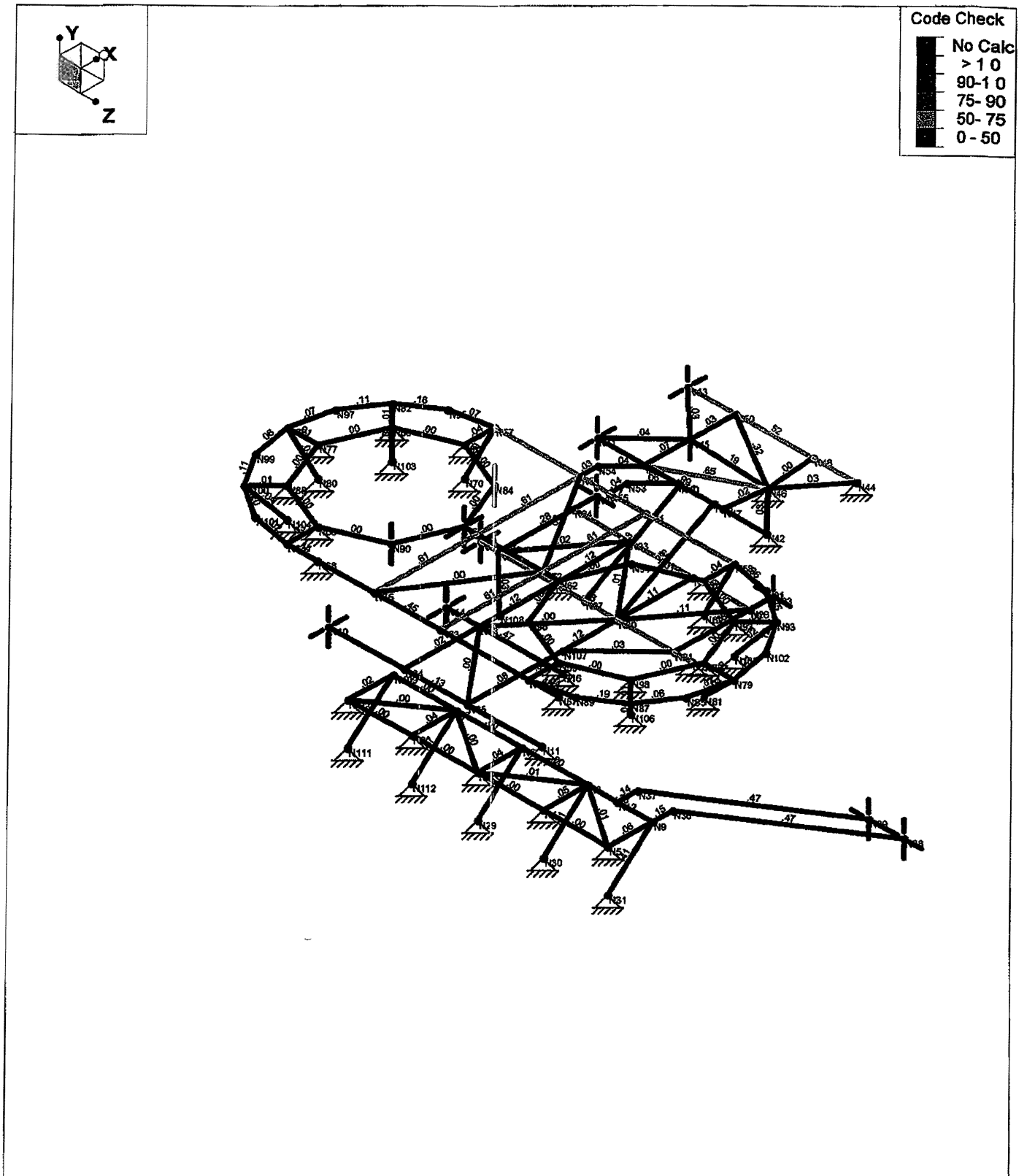

Member Code Checks Displayed
Results for LC 7 DL+LL

		Sept 1, 2010 at 1 52 PM
		PDX Deicing Platform r3d

TPF-9

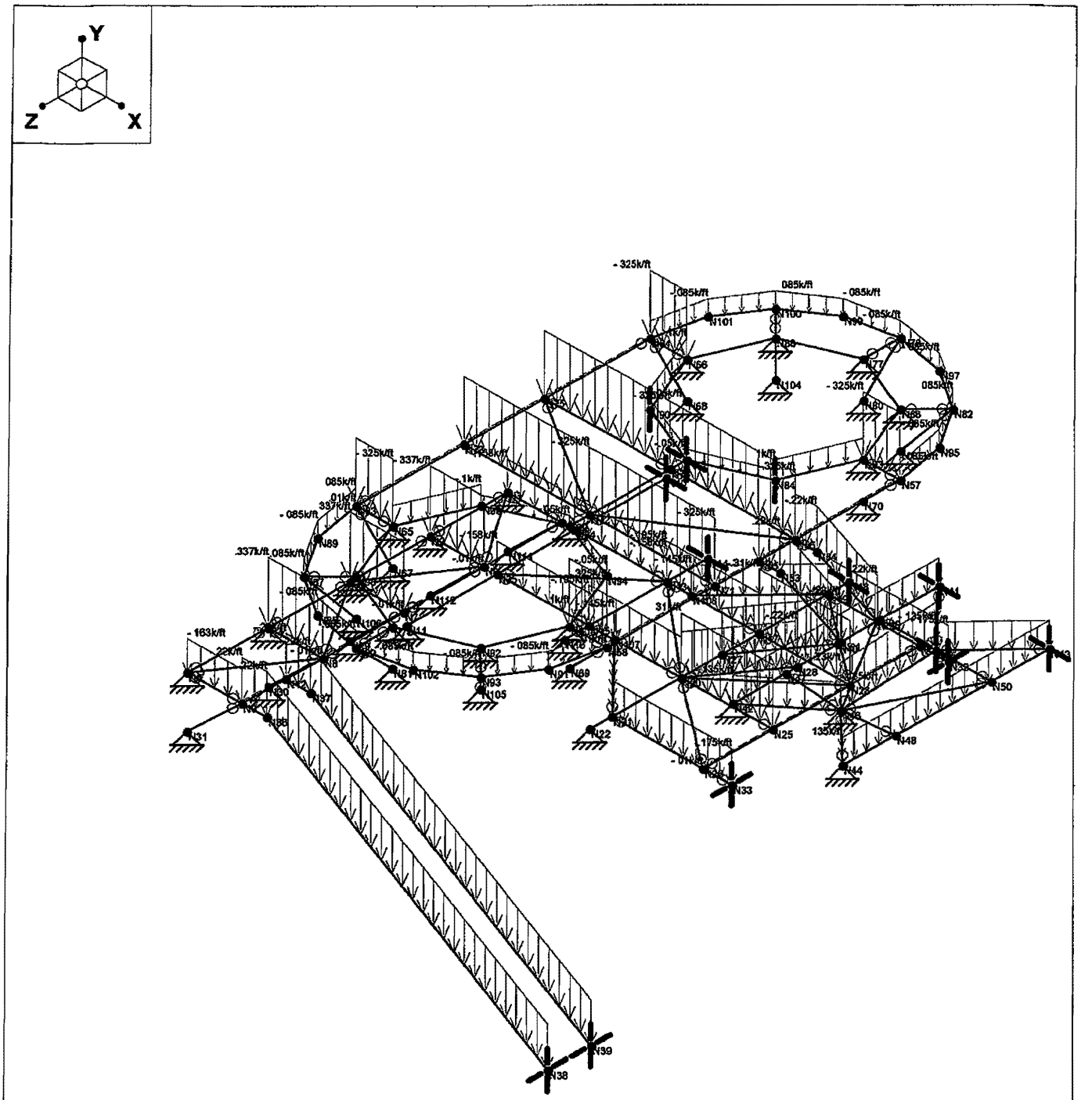

Loads LC 7 DL+LL
Results for LC 7 DL+LL

		Sept 1, 2010 at 1 53 PM
		PDX Deicing Platform r3d

TPF-10

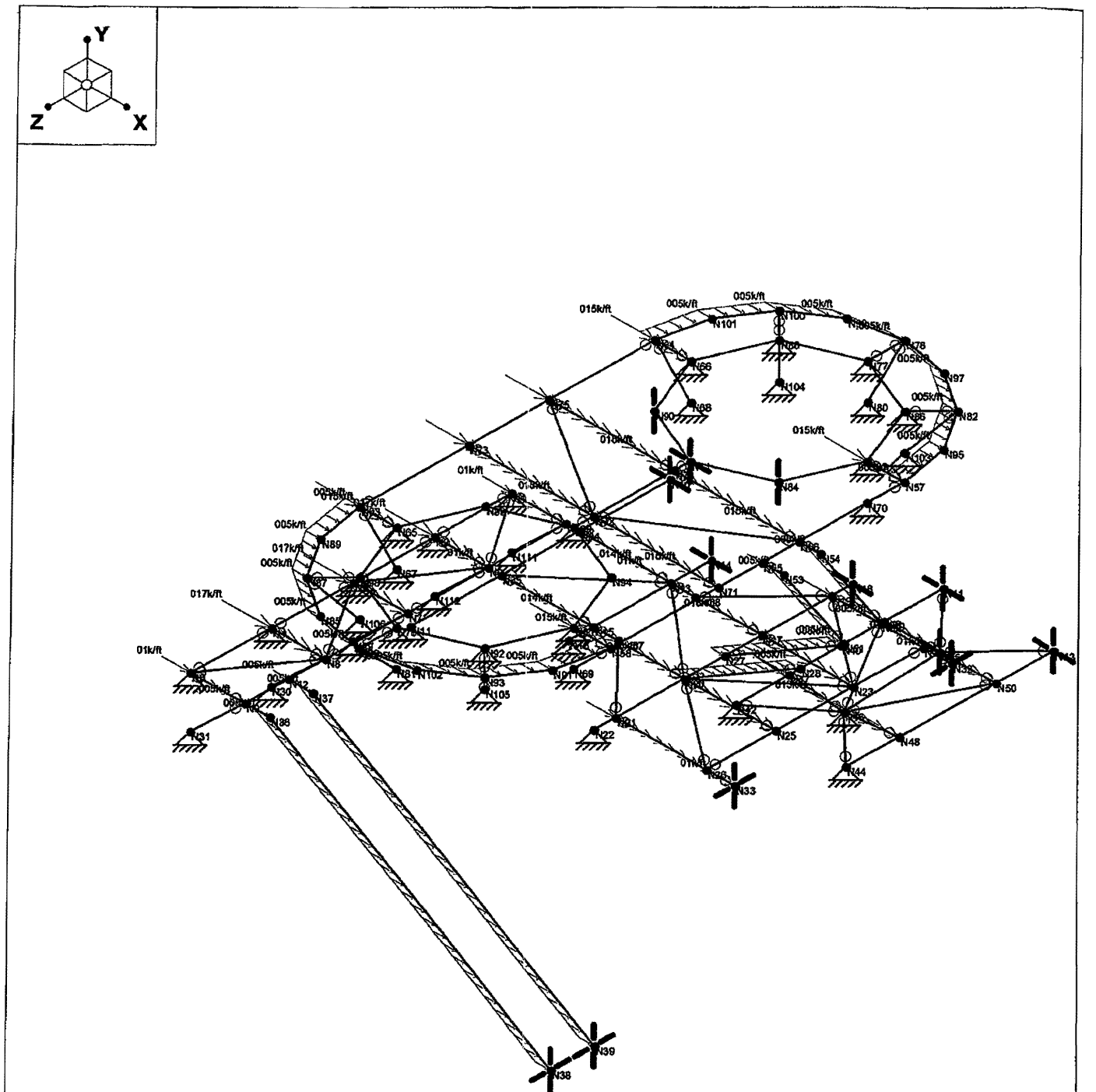

Loads. BLC 3 ELx
Results for LC 7 DL+LL

		Sept 1, 2010 at 1 53 PM
		PDX Deicing Platform r3d

TPF-11

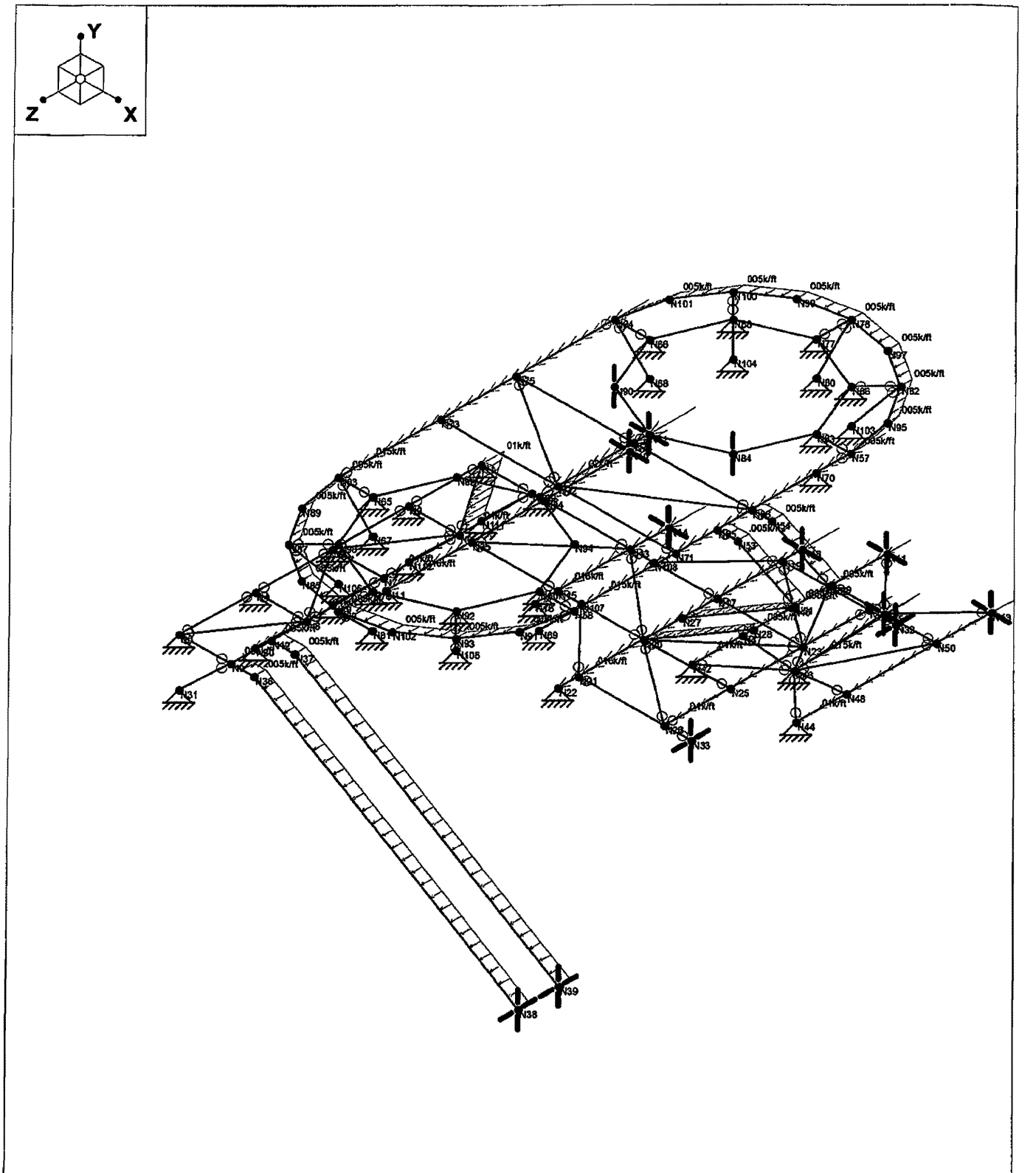

Sept 1, 2010 at 1 53 PM

PDX Deicing Platform r3d

TPF-12

Basic Load Cases

	BLC Description	Category	X Gravity	Y Gravity	Z Gravity	Joint	Point	Distributed	Area (Me.	Surface (
1	DL	DL		-1				70		
2	LL	LL						64		
3	ELx	ELX	26					51		
4	ELz	ELZ			26			40		

Joint Boundary Conditions

	Joint Label	X [k/in]	Y [k/in]	Z [k/in]	X Rot [k-ft/rad]	Y Rot [k-ft/rad]	Z Rot [k-ft/rad]	Footing
1	N1	Reaction	Reaction	Reaction				
2	N2	Reaction	Reaction	Reaction				
3	N14	Reaction	Reaction					
4	N15							
5	N9							
6	N11	Reaction	Reaction	Reaction				
7	N13							
8	N16	Reaction	Reaction	Reaction				
9	N18	Reaction	Reaction					
10	N22	Reaction	Reaction	Reaction				
11	N10	Reaction	Reaction					
12	N5	Reaction	Reaction	Reaction				
13	N4	Reaction	Reaction	Reaction				
14	N3	Reaction	Reaction	Reaction				
15	N33		Reaction	Reaction				
16	N32		Reaction	Reaction				
17	N31	Reaction	Reaction	Reaction				
18	N30	Reaction	Reaction	Reaction				
19	N29	Reaction	Reaction	Reaction				
20	N38		Reaction	Reaction				
21	N39		Reaction	Reaction				
22	N43	Reaction	Reaction					
23	N45	Reaction	Reaction					
24	N41	Reaction	Reaction					
25	N44	Reaction	Reaction	Reaction				
26	N46	Reaction	Reaction	Reaction				
27	N42	Reaction	Reaction	Reaction				
28	N60	Reaction	Reaction	Reaction				
29	N61	Reaction	Reaction					
30	N62	Reaction	Reaction	Reaction				
31	N65	Reaction	Reaction	Reaction				
32	N66	Reaction	Reaction	Reaction				
33	N67	Reaction	Reaction	Reaction				
34	N68	Reaction	Reaction	Reaction				
35	N69	Reaction	Reaction	Reaction				
36	N70	Reaction	Reaction	Reaction				
37	N83	Reaction	Reaction	Reaction				
38	N80	Reaction	Reaction	Reaction				
39	N77	Reaction	Reaction	Reaction				
40	N104	Reaction	Reaction	Reaction				
41	N103	Reaction	Reaction	Reaction				
42	N86	Reaction	Reaction	Reaction				
43	N88	Reaction	Reaction	Reaction				
44	N84		Reaction					
45	N90		Reaction					
46	N94							
47	N96							
48	N92	Reaction	Reaction	Reaction				

Joint Boundary Conditions (Continued)

	Joint Label	X [k/in]	Y [k/in]	Z [k/in]	X Rot [k-ft/rad]	Y Rot.[k-ft/rad]	Z Rot.[k-ft/rad]	Footing
49	N98	Reaction	Reaction	Reaction				
50	N76	Reaction	Reaction	Reaction				
51	N81	Reaction	Reaction	Reaction				
52	N105	Reaction	Reaction	Reaction				
53	N106	Reaction	Reaction	Reaction				
54	N112	Reaction	Reaction	Reaction				
55	N111	Reaction	Reaction	Reaction				

Hot Rolled Steel Design Parameters

	Label	Shape	Length	Lbyy[ft]	Lbzz[ft]	Lcomp to	Lcomp bo	Kyy	Kzz	Cm-yy	Cm-zz	Cb	y sway	z sway	Function
1	M122	Horiz Br	8 973												Lateral
2	M121	Horiz Br	8 758												Lateral
3	M120	Vert Brace	6 33												Lateral
4	M119	Vert Brace	6 572												Lateral
5	M118	Vert Brace	6 598												Lateral
6	M117	Vert Brace	6 5												Lateral
7	M116	M2	6 543												Lateral
8	M115	M2	6 543												Lateral
9	M114	M2	3 999												Lateral
10	M113	M2	3 999												Lateral
11	M112	M2	3 999												Lateral
12	M111	M2	3 999												Lateral
13	M110	Vert Brace	4 242												Lateral
14	M109	Vert Brace	4 242												Lateral
15	M108	Vert Brace	4 243												Lateral
16	M107	M2	6.263												Lateral
17	M106	Vert Brace	4 242												Lateral
18	M105	Vert Brace	4 243												Lateral
19	M104	M2	2 999												Lateral
20	M103	M2	2 999												Lateral
21	M102	M2	3 999												Lateral
22	M101	M2	3 999												Lateral
23	M100	M2	6 263												Lateral
24	M99	M2	3 999												Lateral
25	M98	Horiz Br	12 182												Lateral
26	M97	Horiz Br	12 182												Lateral
27	M96	Vert Brace	4 242												Lateral
28	M95	M2	3												Lateral
29	M94	M2	3 999												Lateral
30	M93	M2	3 999												Lateral
31	M92	M2	3 999												Lateral
32	M91	M2	3 999												Lateral
33	M90	M2	3 999												Lateral
34	M89	M2	3 999												Lateral
35	M88	M2	3 999												Lateral
36	M87	M2	3 999												Lateral
37	M86	M2	2 999												Lateral
38	M85	M2	2.999												Lateral
39	M84	M2	3 999												Lateral
40	M83	M2	3												Lateral
41	M82	Upper An	5 549												Lateral
42	M81	Upper An	5 549												Lateral
43	M80	Horiz Br	5 549												Lateral
44	M79	Horiz. Br	5 549												Lateral
45	M78	Horiz. Br	5 549												Lateral
46	M77	Horiz Br	5 549												Lateral

Hot Rolled Steel Design Parameters (Continued)

	Label	Shape	Length	Lbyy[ft]	Lbzz[ft]	Lcomp to	Lcomp bo	Kyy	Kzz	Cm-yy	Cm-zz	Cb	y sway	z sway	Function
47	M76	Upper An	5 549												Lateral
48	M75	Upper An	5 549												Lateral
49	M74	Horiz Br	5 549												Lateral
50	M73	Horiz Br	5 549												Lateral
51	M72	Upper An	5 549												Lateral
52	M71	Upper An	5 549												Lateral
53	M70	Upper An	5 549												Lateral
54	M69	Upper An	5 549												Lateral
55	M68	Horiz Br	5 549												Lateral
56	M67	Horiz Br	5 549												Lateral
57	M66	LANDING	10 25												Lateral
58	M65	LANDING	10 25												Lateral
59	M64	LANDING	10 25												Lateral
60	M63	LANDING	10 25												Lateral
61	M62	M2	3												Lateral
62	M61	Vert Brace	4 243												Lateral
63	M60	Vert Brace	4 243												Lateral
64	M59	Vert Brace	4 243												Lateral
65	M58	Vert Brace	4 243												Lateral
66	M57	M2	3												Lateral
67	M56	M2	3												Lateral
68	M55	M2	3												Lateral
69	M54	M5	24												Lateral
70	M53	M2	9 5												Lateral
71	M52	M5	24												Lateral
72	M51	STRING	1 75												Lateral
73	M50	STRING	5 59												Lateral
74	M49	STRING	1 75												Lateral
75	M48	STRING	5 59												Lateral
76	M47	STRING	10 977												Lateral
77	M46	STRING	10 977												Lateral
78	M45	LANDING	4 5												Lateral
79	M44	LANDING	4 5												Lateral
80	M43	LANDING	4 522												Lateral
81	M42	LANDING	4 522												Lateral
82	M41	LANDING	7 763												Lateral
83	M40	LANDING	16 833	Segment	Segment	Segment	Segment								Lateral
84	M39	MC8X22 8	16 833	Segment		Segment	8								Lateral
85	M38	M1	7 896												Lateral
86	M37	M1	7 897												Lateral
87	M36	Horiz Br	9 4												Lateral
88	M35	Horiz Br	9 816												Lateral
89	M34	Horiz Br	9 4												Lateral
90	M33	Horiz Br	9.816												Lateral
91	M32	Horiz Br	9 816												Lateral
92	M31	Horiz Br	7 858												Lateral
93	M30	Horiz Br	7 939												Lateral
94	M29	Horiz Br	7 916												Lateral
95	M28	Horiz Br	7 72												Lateral
96	M27	STRING	26 926			5	5								Lateral
97	M26	STRING	2												Lateral
98	M25	M1	7 5												Lateral
99	M24	STRING	2												Lateral
100	M23	STRING	26 926			5	5								Lateral
101	M22	Vert Brace	6 129												Lateral
102	M21	Vert Brace	6 129												Lateral
103	M20	Vert Brace	6 129												Lateral

TPF-15

Hot Rolled Steel Design Parameters (Continued)

	Label	Shape	Length	Lbyy[ft]	Lbzz[ft]	Lcomp to	Lcomp bo	Kyy	Kzz	Cm-yy	Cm-zz	Cb	y sway	z sway	Function
104	M19	M2	4.416												Lateral
105	M18	M2	4 416												Lateral
106	M17	M2	4 416												Lateral
107	M16	M3	6 5												Lateral
108	M15	M3	6 598												Lateral
109	M14	M3	6 57												Lateral
110	M13	M3	17 666												Lateral
111	M12	M2	9 833												Lateral
112	M11	M2	9 833												Lateral
113	M10	M2	7 5												Lateral
114	M9	M2	7 5												Lateral
115	M8	M2	7 5												Lateral
116	M7	M2	4 416												Lateral
117	M6	M2	7 5												Lateral
118	M5	M2	7 5												Lateral
119	M4	M2	4 416												Lateral
120	M3	M1	21 166	Segment											Lateral
121	M2	M1	21 166	Segment	Segment										Lateral
122	M1	M2	11 633												Lateral
123	M123	M2	6 332												Lateral
124	M124	Vert Brace	6.129												Lateral
125	M125	Vert Brace	6 129												Lateral

Envelope AISC ASD Steel Code Checks

	Member	Shape	Code C	Loc[ft]	LC	Shear C	Loc[ft]	Dir	LC	Fa [ksi]	Ft [ksi]	Fb y-y [	Fb z-z [..	Cb	Cmy	Cmz	ASD Eqn
1	M122	L3 5X3 5X4	318	0	7	006	8 973	y	7	6 203	21 6	- Code					H1-1
2	M121	L3 5X3 5X4	645	8 758	7	006	8.758	y	7	6 512	21 6	- Code					H1-1
3	M120	L3X3X6	000	0	1	002	6 33	y	7	8 918	21 6	- Code					H1-1
4	M119	L3X3X6	000	0	1	002	6.572	y	7	8 273	21 6	- Code					H1-1
5	M118	L3X3X6	000	0	1	003	0	y	7	8 208	21 6	- Code					H1-1
6	M117	L3X3X6	000	0	1	003	0	y	7	8 457	21 6	- Code					H1-1
7	M116	W8X15	035	3 272	7	013	6 543	y	7	17 025	30	37 5	30	1	6	1	H2-1
8	M115	W8X15	.039	3 272	7	013	6 543	y	7	17 025	30	37 5	30	1	6	1	H2-1
9	M114	W8X15	075	3 999	5	021	2 333	y	7	23 591	30	37 5	30	2	85	85	H1-2
10	M113	W8X15	070	0	5	019	1 625	y	7	23 591	30	37 5	30	2	85	85	H1-2
11	M112	W8X15	186	3 999	7	067	2	z	7	23 591	30	37 5	30	2 3	262	85	H1-2
12	M111	W8X15	046	3 999	5	012	1 208	y	7	23 591	30	37 5	30	1	85	85	H1-2
13	M110	L3X3X6	041	4 242	7	001	4 242	y	3	14 59	21 6	- Code					H1-1
14	M109	L3X3X6	.022	4 242	7	001	0	y	4	14 59	21 6	- Code					H1-1
15	M108	L3X3X6	045	4 243	7	001	4 243	y	3	14 589	21 6	- Code					H1-1
16	M107	W8X15	.030	3 132	7	013	0	y	7	17 836	30	37 5	24 899	1	6	1	H1-1
17	M106	L3X3X6	045	4 242	7	001	4 242	y	7	14 59	21 6	- Code					H1-1
18	M105	L3X3X6	034	4 243	7	001	4 243	y	7	14 589	21 6	- Code					H1-1
19	M104	W8X15	008	1 5	7	004	0	y	7	25 681	30	37 5	33	1	6	1	H2-1
20	M103	W8X15	008	1 5	7	003	0	y	7	25 681	30	37 5	33	1	.6	1	H2-1
21	M102	W8X15	357	3 999	7	113	2	z	7	23 591	30	37 5	30	1	718	85	H1-2
22	M101	W8X15	251	0	7	095	2	z	7	23 591	30	37 5	30	1	375	85	H1-2
23	M100	W8X15	030	3 132	7	012	0	y	7	17 836	30	37 5	24 899	1	6	1	H1-1
24	M99	W8X15	210	3 999	7	074	2	z	7	23 591	30	37 5	30	2 3	284	.85	H1-2
25	M98	L3 5X3 5X4	111	0	1	004	12 182	y	7	3 366	21 6	- Code					H1-1
26	M97	L3 5X3 5X4	098	12 182	1	013	12 182	y	7	3 366	21 6	- Code					H1-1
27	M96	L3X3X6	044	4 242	7	001	4 242	y	4	14 59	21 6	- Code					H1-1
28	M95	W8X15	006	1 5	7	001	3	y	7	25.68	30	37 5	33	1	6	1	H2-1
29	M94	W8X15	140	3 999	4	008	3 999	y	7	23 591	30	37 5	30	1	85	85	H2-1
30	M93	W8X15	199	0	7	071	2	z	7	23 591	30	37 5	30	2 3	291	85	H2-1
31	M92	W8X15	111	3 999	6	035	2 208	y	7	23 591	30	37 5	30	2 3	85	85	H2-1

TPF-16

Envelope AISC ASD Steel Code Checks (Continued)

	Member	Shape	Code C	Loc[ft]	LC	Shear C	Loc[ft]	Dir	LC	Fa [ksi]	Ft [ksi]	Fb y-y [	Fb z-z [	Cb	Cmy	Cmz	ASD Eqn
32	M91	W8X15	.064	3 999	6	019	1 625	y	7	23 591	30	37 5	30	1	85	85	H2-1
33	M90	W8X15	073	0	6	022	2 291	y	7	23 591	30	37 5	30	1	85	85	H1-2
34	M89	W8X15	.111	0	6	036	2	z	7	23 591	30	37 5	30	2 3	85	85	H1-2
35	M88	W8X15	167	0	6	058	2	z	7	23 591	30	37 5	30	2 3	85	85	H1-2
36	M87	W8X15	154	0	4	021	2	z	7	23 591	30	37 5	30	1	85	85	H1-2
37	M86	W8X15	008	1 5	5	007	2 999	y	7	25 681	30	37 5	33	1	1	1	H2-1
38	M85	W8X15	005	1 5	5	008	2 999	y	7	25 681	30	37 5	33	1	1	1	H2-1
39	M84	W8X15	121	0	7	038	2	z	7	23 591	30	37 5	30	1	983	85	H1-2
40	M83	W8X15	008	1 469	5	005	3	y	7	25 68	30	37 5	33	1	6	1	H2-1
41	M82	L6X3 5X5	001	5 549	6	008	0	y	7	14 644	21 6	- Code					H1-1
42	M81	L6X3 5X5	000	5 549	6	014	0	y	7	14 644	21 6	- Code					H1-1
43	M80	L3 5X3 5X4	000	5 549	1	003	0	y	7	13 209	21 6	- Code					H1-1
44	M79	L3 5X3 5X4	000	0	2	002	5 549	y	7	13 209	21 6	- Code					H1-1
45	M78	L3 5X3 5X4	000	0	2	002	0	y	7	13 209	21 6	- Code					H1-1
46	M77	L3 5X3 5X4	000	0	1	002	5 549	y	7	13 209	21 6	- Code					H1-1
47	M76	L6X3 5X5	000	0	7	014	5 549	y	7	14 644	21 6	- Code					H1-1
48	M75	L6X3 5X5	000	0	7	008	5 549	y	7	14 644	21 6	- Code					H1-1
49	M74	L3 5X3 5X4	000	5 549	2	005	5 549	y	7	13 209	21 6	- Code					H1-1
50	M73	L3 5X3 5X4	000	5 549	3	211	0	y	7	13 209	21 6	- Code					H1-1
51	M72	L6X3 5X5	005	0	7	632	5 549	y	7	14 644	21 6	- Code					H1-1
52	M71	L6X3 5X5	005	0	7	894	0	y	7	14 644	21 6	- Code					H1-1
53	M70	L6X3 5X5	005	0	7	901	5 549	y	7	14 644	21 6	- Code					H1-1
54	M69	L6X3 5X5	005	0	7	642	0	y	7	14 644	21 6	- Code					H1-1
55	M68	L3 5X3 5X4	000	0	1	215	5 549	y	7	13 209	21 6	- Code					H1-1
56	M67	L3 5X3 5X4	000	5 549	2	005	0	y	7	13 209	21 6	- Code					H1-1
57	M66	C8X11 5	605	5 125	7	070	0	y	7	3 855	21 6	27	10 749	1	6	1	H1-3
58	M65	C8X11 5	605	5 125	7	073	10 25	y	7	3 855	21 6	27	10 749	1	6	1	H1-3
59	M64	C8X11 5	605	5 125	7	070	0	y	7	3 855	21 6	27	10 749	1	6	1	H1-3
60	M63	C8X11 5	605	5 125	7	074	10 25	y	7	3 855	21 6	27	10 749	1	6	1	H1-3
61	M62	W8X15	035	1 5	7	027	0	y	7	25 68	30	37 5	33	1	6	1	H2-1
62	M61	L3X3X6	199	4 243	7	001	4 243	y	4	14 589	21.6	- Code					H1-1
63	M60	L3X3X6	196	0	7	001	0	y	4	14 589	21 6	- Code					H1-1
64	M59	L3X3X6	143	0	7	001	0	y	5	14 589	21 6	- Code					H1-1
65	M58	L3X3X6	142	0	7	001	0	y	7	14 589	21 6	- Code					H1-1
66	M57	W8X15	044	1 5	7	021	3	y	7	25 68	30	37 5	33	1	6	1	H2-1
67	M56	W8X15	035	1 5	7	163	0	y	7	25 68	30	37 5	33	1	6	1	H2-1
68	M55	W8X15	045	1 5	7	110	0	y	7	25 68	30	37 5	33	1	6	1	H2-1
69	M54	W8X31	453	12 5	7	050	24	y	7	7 316	30	37 5	18 114	1	6	1	H1-2
70	M53	W8X15	404	5 245	7	092	9 5	y	7	8 825	30	37 5	16 415	1	6	1	H1-2
71	M52	W8X31	712	12 5	7	100	24	y	7	7 316	30	37 5	18 114	1	559	1	H1-2
72	M51	C12X30	033	0	7	018	1 75	y	7	20 114	21.6	27	21 6	1	6	1	H2-1
73	M50	C12X30	040	3 901	7	017	0	y	7	14 456	21 6	27	21 6	1	616	1	H2-1
74	M49	C12X30	041	0	7	015	1 75	y	7	20 114	21 6	27	21 6	1	6	1	H1-3
75	M48	C12X30	061	2 562	7	018	0	y	7	14 456	21 6	27	21 6	1	692	1	H1-3
76	M47	C12X30	127	5 603	7	015	10 977	y	7	5 015	21 6	27	12 057	1	6	1	H1-3
77	M46	C12X30	212	7 318	7	018	10 977	y	7	5 015	21 6	27	12 057	1	6	1	H1-3
78	M45	C8X11 5	025	2 25	7	011	4 5	y	7	14 626	21 6	27	21 6	1	6	1	H2-1
79	M44	C8X11 5	071	2 25	7	028	0	y	7	14 626	21 6	27	21 6	1	6	1	H2-1
80	M43	C8X11 5	005	2 261	3	021	0	y	7	14 576	21 6	27	21 6	1	1	1	H2-1
81	M42	C8X11 5	016	2 261	7	023	4 522	y	7	14 576	21 6	27	21 6	1	6	1	H2-1
82	M41	C8X11 5	190	3 882	7	037	7 763	y	7	6 72	21 6	27	14 192	1	6	85	H1-3
83	M40	C8X11 5	516	8 066	7	048	0	y	7	6 743	21 6	27	14 216	1	385	85	H1-3
84	M39	MC8X22 8	985	8 592	7	089	11 923	z	7	16 894	21 6	27	21 6	1	986	.85	H1-3
85	M38	W8X24	026	3 948	7	018	7 896	y	7	22 898	30	37 5	30	1	6	1	H1-3
86	M37	W8X24	026	3 949	7	018	0	y	7	22 897	30	37 5	30	1	6	1	H1-3
87	M36	L3 5X3 5X4	033	9 4	6	011	0	y	7	5 653	21 6	- Code					H2-1
88	M35	L3 5X3 5X4	026	0	5	007	9 816	y	7	5 184	21 6	- Code					H1-1

TPF-17

Envelope AISC ASD Steel Code Checks (Continued)

	Member	Shape	Code C	Loc[ft]	LC	Shear C	Loc[ft]	Dir	LC	Fa [ksi]	Ft [ksi]	Fb y-y [	Fb z-z [	Cb	Cmy	Cmz	ASD Eqn
89	M34	L3 5X3 5X4	139	9 4	6	006	9 4	y	7	5 652	21 6	- Code					H1-1
90	M33	L3 5X3 5X4	007	9 816	1	003	9 816	y	7	5 184	21 6	- Code					H1-1
91	M32	L3 5X3 5X4	003	0	7	003	9 816	y	3	5 184	21 6	- Code					H1-1
92	M31	L3 5X3 5X4	009	7 858	1	004	0	y	7	8 088	21 6	- Code					H1-1
93	M30	L3 5X3 5X4	012	0	5	003	7 939	y	3	7 924	21 6	- Code					H2-1
94	M29	L3 5X3 5X4	010	7 916	1	002	7 916	y	7	7 971	21 6	- Code					H1-1
95	M28	L3 5X3 5X4	006	0	5	002	7 72	y	7	8 38	21 6	- Code					H2-1
96	M27	C12X30	470	12 061	7	035	26 926	y	7	834	21 6	27	21 6	1	6	85	H2-1
97	M26	C12X30	299	0	3	053	917	y	5	19 839	21 6	27	21 6	1	85	85	H2-1
98	M25	W8X24	025	3 75	7	018	0	y	7	23 392	30	37 5	30	1	6	1	H2-1
99	M24	C12X30	271	0	1	041	0	y	7	19 839	21 6	27	21 6	1	85	85	H1-2
100	M23	C12X30	473	12 061	7	035	26 926	y	7	834	21 6	27	21 6	1	6	85	H2-1
101	M22	L3X3X6	071	6 129	7	002	0	y	4	9 511	21 6	- Code					H1-1
102	M21	L3X3X6	214	6 129	7	.003	0	y	7	9 511	21 6	- Code					H1-1
103	M20	L3X3X6	413	6 129	7	001	0	y	4	9 511	21 6	- Code					H1-1
104	M19	W8X15	037	2 208	7	020	0	y	7	22 637	30	37 5	30	1	6	85	H2-1
105	M18	W8X15	050	2 208	7	020	0	y	7	22 637	30	37 5	30	1	6	1	H2-1
106	M17	W8X15	059	2 208	7	010	4 416	y	7	22.637	30	37 5	30	1	6	1	H2-1
107	M16	W8X18	195	2 979	5	094	2 979	y	7	22 135	30	37 5	30	1	604	85	H2-1
108	M15	W8X18	006	3 299	4	005	0	y	7	21 966	30	37.5	30	1	1	1	H1-3
109	M14	W8X18	006	3 285	4	003	6 57	y	7	22 015	30	37 5	30	1	1	1	H1-3
110	M13	W8X18	536	9 385	7	041	17 666	y	7	5 035	30	37 5	12 048	1	6	1	H1-3
111	M12	W8X15	281	3 073	7	052	0	y	7	8 237	30	37 5	15 859	1	6	1	H1-3
112	M11	W8X15	282	3 073	7	053	0	y	7	8 237	30	37 5	15 859	1	6	1	H1-3
113	M10	W8X15	111	3 75	7	037	7 5	y	7	14 076	30	37 5	20 858	1	6	1	H1-3
114	M9	W8X15	117	2 734	7	039	0	y	7	14 076	30	37 5	20 858	1	6	1	H1-3
115	M8	W8X15	059	3 75	7	018	7 5	y	7	14 076	30	37 5	20 858	1	6	1	H1-3
116	M7	W8X15	036	2 208	7	020	4 416	y	7	22 637	30	37 5	30	1	6	1	H2-1
117	M6	W8X15	121	3 75	7	038	7 5	y	7	14 076	30	37 5	20 858	1	6	1	H1-3
118	M5	W8X15	117	2 734	7	042	0	y	7	14.076	30	37 5	20 858	1	.6	1	H1-2
119	M4	W8X15	018	2 208	7	010	0	y	7	22 637	30	37 5	30	1	6	1	H2-1
120	M3	W8X24	564	10 583	7	145	0	y	7	20 133	30	37.5	33	1	536	.85	H1-2
121	M2	W8X24	129	10 583	7	024	21 166	y	7	24 77	30	37 5	30	1	991	85	H1-2
122	M1	W8X15	467	8 24	7	057	0	y	7	5 885	30	37 5	13 406	1	6	85	H1-2
123	M123	W8X15	006	3 166	4	001	0	y	7	17 637	30	37 5	24 627	1	85	85	H1-2
124	M124	L3X3X6	071	6 129	7	001	0	y	4	9 511	21 6	- Code					H1-1
125	M125	L3X3X6	033	6 129	7	001	0	y	4	9 511	21 6	- Code					H1-1

Envelope Joint Reactions

	Joint		X [k]	LC	Y [k]	LC	Z [k]	LC	MX [k-ft]	LC	MY [k-ft]	LC	MZ [k-ft]	LC
1	N1	max	- 192	2	427	7	- 026	2	0	1	0	1	0	1
2		min	- 534	7	091	1	- 208	3	0	1	0	1	0	1
3	N2	max	- 21	1	824	7	0	2	0	1	0	1	0	1
4		min	- 899	7	137	1	- 015	3	0	1	0	1	0	1
5	N14	max	- 002	1	1 852	7	0	1	0	1	0	1	0	1
6		min	- 017	6	412	2	0	1	0	1	0	1	0	1
7	N11	max	0	1	934	7	014	2	0	1	0	1	0	1
8		min	-.033	6	279	1	- 3	3	0	1	0	1	0	1
9	N16	max	- 006	1	2 267	7	017	2	0	1	0	1	0	1
10		min	-.114	6	474	2	- 214	3	0	1	0	1	0	1
11	N18	max	- 102	1	5 32	7	0	1	0	1	0	1	0	1
12		min	- 795	6	1 052	1	0	1	0	1	0	1	0	1
13	N22	max	- 029	1	5 646	7	- 026	7	0	1	0	1	0	1
14		min	- 834	6	1 107	1	- 932	3	0	1	0	1	0	1
15	N10	max	- 002	1	936	7	0	1	0	1	0	1	0	1
16		min	- 033	6	28	2	0	1	0	1	0	1	0	1

TPF-18

Envelope Joint Reactions (Continued)

	Joint		X [k]	LC	Y [k]	LC	Z [k]	LC	MX [k-ft]	LC	MY [k-ft]	LC	MZ [k-ft]	LC
17	N5	max	- 381	1	439	7	27	7	0	1	0	1	0	1
18		min	-6 147	7	091	2	- 113	1	0	1	0	1	0	1
19	N4	max	- 703	2	824	7	0	7	0	1	0	1	0	1
20		min	-2 732	7	137	1	- 015	1	0	1	0	1	0	1
21	N3	max	- 333	1	872	7	- 036	2	0	1	0	1	0	1
22		min	-1 261	7	168	1	- 413	5	0	1	0	1	0	1
23	N33	max	0	1	2 087	7	- 001	2	0	1	0	1	0	1
24		min	0	1	439	2	- 004	3	0	1	0	1	0	1
25	N32	max	0	1	2 081	7	002	6	0	1	0	1	0	1
26		min	0	1	436	2	- 003	1	0	1	0	1	0	1
27	N31	max	5 959	7	5 757	7	0	6	0	1	0	1	0	1
28		min	693	1	.68	1	- 004	1	0	1	0	1	0	1
29	N30	max	3 099	7	2 978	7	002	7	0	1	0	1	0	1
30		min	.542	2	535	2	- 026	1	0	1	0	1	0	1
31	N29	max	1 022	7	1 003	7	0	4	0	1	0	1	0	1
32		min	237	2	241	2	- 004	1	0	1	0	1	0	1
33	N38	max	0	1	3 655	7	- 001	7	0	1	0	1	0	1
34		min	0	1	371	2	- 101	3	0	1	0	1	0	1
35	N39	max	0	1	3 65	7	0	6	0	1	0	1	0	1
36		min	0	1	37	2	-.098	1	0	1	0	1	0	1
37	N43	max	715	7	1 647	7	0	1	0	1	0	1	0	1
38		min	155	1	333	1	0	1	0	1	0	1	0	1
39	N45	max	3 785	7	2 084	7	0	1	0	1	0	1	0	1
40		min	081	2	384	1	0	1	0	1	0	1	0	1
41	N41	max	- 173	1	4 009	7	0	1	0	1	0	1	0	1
42		min	-1 464	7	638	2	0	1	0	1	0	1	0	1
43	N44	max	- 002	1	1 689	7	2 126	7	0	1	0	1	0	1
44		min	- 018	6	339	1	282	1	0	1	0	1	0	1
45	N46	max	- 131	1	2 299	7	-1 164	2	0	1	0	1	0	1
46		min	- 944	6	464	2	-7 021	7	0	1	0	1	0	1
47	N42	max	- 005	1	4 437	7	4 923	7	0	1	0	1	0	1
48		min	- 112	7	668	2	.475	1	0	1	0	1	0	1
49	N60	max	- 97	1	1 094	7	- 025	2	0	1	0	1	0	1
50		min	-4 565	7	.177	1	- 176	7	0	1	0	1	0	1
51	N61	max	- 067	1	3 955	7	0	1	0	1	0	1	0	1
52		min	- 502	6	599	1	0	1	0	1	0	1	0	1
53	N62	max	- 001	1	4 371	7	365	7	0	1	0	1	0	1
54		min	- 376	6	699	1	- 81	1	0	1	0	1	0	1
55	N65	max	3 217	7	1 091	7	- 035	2	0	1	0	1	0	1
56		min	563	2	177	2	- 173	7	0	1	0	1	0	1
57	N66	max	3 045	7	831	7	013	6	0	1	0	1	0	1
58		min	363	2	131	2	- 023	1	0	1	0	1	0	1
59	N67	max	- 7	1	3 104	7	0	7	0	1	0	1	0	1
60		min	-3 089	7	709	1	- 003	1	0	1	0	1	0	1
61	N68	max	- 706	1	3 122	7	0	2	0	1	0	1	0	1
62		min	-3.106	7	.715	1	- 003	3	0	1	0	1	0	1
63	N69	max	4 329	7	4 344	7	0	4	0	1	0	1	0	1
64		min	.879	1	888	1	- 003	1	0	1	0	1	0	1
65	N70	max	4 253	7	4 268	7	0	7	0	1	0	1	0	1
66		min	837	1	847	1	- 003	1	0	1	0	1	0	1
67	N83	max	- 833	1	831	7	011	7	0	1	0	1	0	1
68		min	-4 294	7	131	1	- 023	1	0	1	0	1	0	1
69	N80	max	0	7	759	7	- 192	2	0	1	0	1	0	1
70		min	- 003	2	201	1	- 743	7	0	1	0	1	0	1
71	N77	max	0	7	054	4	736	7	0	1	0	1	0	1
72		min	- 01	2	033	1	063	1	0	1	0	1	0	1
73	N104	max	- 174	1	983	7	- 174	2	0	1	0	1	0	1

TPF-19

Envelope Joint Reactions (Continued)

	Joint		X [k]	LC	Y [k]	LC	Z [k]	LC	MX [k-ft]	LC	MY [k-ft]	LC	MZ [k-ft]	LC
74		min	- 684	7	256	2	- 684	7	0	1	0	1	0	1
75	N103	max	675	7	97	7	- 172	2	0	1	0	1	0	1
76		min	17	2	253	2	- 675	7	0	1	0	1	0	1
77	N86	max	- 115	1	055	7	681	7	0	1	0	1	0	1
78		min	- 684	7	033	2	105	1	0	1	0	1	0	1
79	N88	max	694	7	056	7	691	7	0	1	0	1	0	1
80		min	117	1	033	1	107	1	0	1	0	1	0	1
81	N84	max	0	1	47	7	0	1	0	1	0	1	0	1
82		min	0	1	082	2	0	1	0	1	0	1	0	1
83	N90	max	0	1	47	7	0	1	0	1	0	1	0	1
84		min	0	1	082	2	0	1	0	1	0	1	0	1
85	N92	max	- 179	2	031	3	- 172	2	0	1	0	1	0	1
86		min	- 371	5	- 025	7	- 39	5	0	1	0	1	0	1
87	N98	max	626	5	033	3	- 133	2	0	1	0	1	0	1
88		min	121	2	- 02	7	- 643	5	0	1	0	1	0	1
89	N76	max	0	7	075	7	- 299	2	0	1	0	1	0	1
90		min	- 01	2	036	1	- 998	5	0	1	0	1	0	1
91	N81	max	0	5	981	7	965	7	0	1	0	1	0	1
92		min	- 003	4	245	1	233	1	0	1	0	1	0	1
93	N105	max	336	7	49	7	336	7	0	1	0	1	0	1
94		min	102	2	157	2	.102	1	0	1	0	1	0	1
95	N106	max	- 162	1	895	7	622	7	0	1	0	1	0	1
96		min	- 622	7	239	2	16	1	0	1	0	1	0	1
97	N112	max	1 022	7	1 006	7	0	7	0	1	0	1	0	1
98		min	238	2	246	1	- 004	1	0	1	0	1	0	1
99	N111	max	47	7	.474	7	0	7	0	1	0	1	0	1
100		min	106	2	.119	2	- 004	3	0	1	0	1	0	1
101	Totals	max	0	5	92 422	7	0	2						
102		min	-4 499	4	17 522	1	-4 872	3						

Envelope Joint Displacements

	Joint		X [in]	LC	Y [in]	LC	Z [in]	LC	X Rotation	LC	Y Rotation	LC	Z Rotation [	LC
1	N1	max	0	7	0	1	0	3	4 667e-5	7	0	1	-2 55e-5	1
2		min	0	2	0	7	0	2	1 583e-5	1	0	1	-1 278e-4	7
3	N2	max	0	7	0	1	0	3	3 478e-6	7	0	1	-2 877e-5	1
4		min	0	1	0	7	0	2	-8 597e-6	3	0	1	-1 563e-4	7
5	N3	max	0	7	0	1	0	5	-1 032e-5	2	4 194e-8	6	-3 216e-5	1
6		min	0	1	0	7	0	2	-1 032e-4	5	-2 29e-5	3	-1 86e-4	7
7	N4	max	0	7	0	1	0	1	9 024e-4	7	0	1	-3 461e-5	1
8		min	0	2	0	7	0	7	1 327e-4	1	0	1	-4 6e-4	7
9	N5	max	0	7	0	2	0	1	-9 958e-5	2	0	1	-3 701e-5	1
10		min	0	1	0	7	0	7	-5 589e-4	7	0	1	-7 299e-4	7
11	N6	max	0	7	0	1	0	3	3 372e-6	7	2 324e-6	7	3 916e-5	7
12		min	0	1	- 003	7	0	2	-8 626e-6	3	-4 169e-5	2	1 899e-6	2
13	N7	max	0	7	0	1	0	3	-1 312e-5	2	6 018e-6	1	7 77e-5	7
14		min	0	1	- 003	7	0	2	-1 029e-4	5	-1 53e-7	7	7.808e-6	2
15	N8	max	001	7	- 002	2	0	3	9 024e-4	7	5 836e-4	3	1 411e-4	1
16		min	0	2	- 009	7	0	2	1 327e-4	1	1 553e-5	7	-9 969e-4	7
17	N9	max	002	7	- 002	1	0	3	-1 007e-4	2	4 584e-5	7	-7 355e-4	2
18		min	0	1	- 017	7	0	2	-6 505e-4	7	-8 37e-4	1	-6 723e-3	7
19	N10	max	0	6	0	2	0	3	2 651e-3	7	3 321e-4	6	-2 541e-3	1
20		min	0	1	0	7	0	2	7 308e-4	1	2 687e-5	1	-1 276e-2	7
21	N11	max	0	6	0	1	0	3	-7 298e-4	1	-1 932e-5	1	-2 541e-3	1
22		min	0	1	0	7	0	2	-2 65e-3	7	-3 314e-4	6	-1 276e-2	7
23	N12	max	013	3	- 006	1	0	3	1 861e-4	7	4 134e-5	4	-7 205e-4	2
24		min	001	7	- 036	7	0	2	1 876e-6	1	-1 062e-4	1	-6 625e-3	7

TPF-20

Envelope Joint Displacements (Continued)

	Joint		X [in]	LC	Y [in]	LC	Z [in]	LC	X Rotation	LC	Y Rotation	LC	Z Rotation [	LC
25	N13	max	024	6	- 019	1	0	3	1 436e-3	7	5 093e-4	6	-1 784e-3	1
26		min	002	1	- 089	7	0	2	3 114e-4	1	3.469e-5	1	-9 626e-3	7
27	N14	max	0	6	0	2	0	3	2 49e-3	7	6 295e-4	6	-1 784e-3	1
28		min	0	1	0	7	0	2	5 423e-4	1	5 179e-5	1	-9 626e-3	7
29	N15	max	024	6	- 012	1	0	3	-4 425e-4	1	-5 141e-5	1	-1 784e-3	1
30		min	001	1	- 058	7	0	2	-2 046e-3	7	-7 804e-4	6	-9 626e-3	7
31	N16	max	0	6	0	2	0	3	-5 362e-4	1	-6 806e-5	1	-1 784e-3	1
32		min	0	1	0	7	0	2	-2 498e-3	7	-1 098e-3	6	-9 626e-3	7
33	N17	max	023	6	- 165	1	0	3	5 718e-3	7	8 603e-5	7	-2 462e-4	1
34		min	002	1	- 913	7	0	2	1 019e-3	1	-1 017e-4	2	-1 364e-3	7
35	N18	max	0	6	0	1	0	5	1 248e-2	7	9 874e-4	6	-2 339e-4	1
36		min	0	1	0	7	0	2	2.273e-3	1	1 059e-4	1	-1 311e-3	7
37	N19	max	019	6	- 048	1	0	5	1 199e-2	7	6 578e-4	6	-2 339e-4	1
38		min	002	1	- 264	7	0	2	2 178e-3	1	6 348e-5	1	-1 311e-3	7
39	N20	max	024	6	- 168	1	0	3	-9 751e-4	1	7 568e-5	2	-2 6e-4	1
40		min	001	1	- 928	7	0	7	-5 49e-3	7	-1 885e-4	7	-1 423e-3	7
41	N21	max	019	6	- 05	1	0	3	-2 234e-3	1	-1 024e-5	1	-2 492e-4	1
42		min	0	1	- 272	7	0	7	-1 23e-2	7	-6 437e-4	6	-1 35e-3	7
43	N22	max	0	6	0	1	0	3	-2 335e-3	1	-2 244e-5	1	-2 492e-4	1
44		min	0	1	0	7	0	7	-1 282e-2	7	-9 896e-4	6	-1 35e-3	7
45	N23	max	023	6	- 068	1	002	1	2 066e-3	7	4 267e-5	6	3 721e-3	7
46		min	002	1	- 334	7	0	6	4 256e-4	2	-2 171e-6	1	7 005e-4	1
47	N24	max	019	6	- 02	1	002	1	1 199e-2	7	5 556e-5	1	3 281e-3	7
48		min	002	1	- 105	7	0	6	2 178e-3	1	-8 159e-6	6	6 23e-4	1
49	N25	max	024	6	- 068	1	002	3	-4 265e-4	1	-1 112e-5	1	3 522e-3	7
50		min	001	1	- 334	7	0	7	-2 055e-3	7	-3 096e-5	6	6 662e-4	1
51	N26	max	019	6	- 02	1	002	3	-2 162e-3	1	5 701e-5	3	3 345e-3	7
52		min	0	1	- 106	7	0	2	-1 19e-2	7	6 076e-6	2	6 356e-4	1
53	N27	max	026	6	- 185	1	0	3	5 116e-4	7	5 196e-5	7	-2 528e-4	1
54		min	003	1	-1 028	7	0	2	9 234e-5	2	-4 259e-6	1	-1 392e-3	7
55	N28	max	- 006	2	- 066	2	0	1	-6 713e-4	2	1 35e-3	7	-2 409e-2	2
56		min	- 057	7	- 475	7	- 002	7	-4 825e-3	7	5 568e-5	2	-2 663e-1	7
57	N29	max	0	2	0	2	0	1	5 699e-5	3	-4 476e-5	2	-9 575e-5	1
58		min	0	7	0	7	0	4	1 717e-5	7	-1 408e-4	5	-1 944e-4	7
59	N30	max	0	2	0	2	0	1	6 757e-4	5	6 343e-4	7	2 467e-4	7
60		min	0	7	0	7	0	7	3 069e-4	7	6 974e-5	1	-3 033e-4	3
61	N31	max	0	1	0	1	0	1	-1 684e-4	4	-3 006e-4	2	-1 8e-4	1
62		min	0	7	0	7	0	6	-4 721e-4	5	-6 933e-4	5	-4 025e-4	7
63	N32	max	019	6	0	2	0	1	1 199e-2	7	0	1	0	1
64		min	002	1	0	7	0	6	2 178e-3	1	0	1	0	1
65	N33	max	019	6	0	2	0	3	-2 162e-3	1	0	1	0	1
66		min	0	1	0	7	0	2	-1 19e-2	7	0	1	0	1
67	N34	max	024	6	- 054	1	0	3	1 206e-3	7	1 437e-4	6	-2 541e-3	1
68		min	002	1	- 196	7	0	2	3 275e-4	1	8 304e-6	1	-1 276e-2	7
69	N35	max	024	6	- 054	1	0	3	-3 28e-4	1	-1 297e-5	1	-2 541e-3	1
70		min	002	1	- 196	7	0	2	-1 207e-3	7	-1 441e-4	6	-1 276e-2	7
71	N36	max	002	7	- 02	2	036	1	-4 756e-5	2	9 228e-5	7	-7 063e-4	2
72		min	0	1	- 178	7	- 002	7	-1 134e-3	5	-2 019e-3	1	-6 514e-3	7
73	N37	max	013	3	- 023	2	02	3	1 724e-4	7	3 313e-5	2	-6 923e-4	2
74		min	001	7	- 195	7	0	2	-8 906e-4	1	-1 408e-3	3	-6 423e-3	7
75	N38	max	111	7	0	2	0	3	2 705e-3	1	4 006e-3	3	6 879e-3	7
76		min	013	1	0	7	0	7	-4 289e-4	7	9 374e-5	2	7 246e-4	2
77	N39	max	12	7	0	2	0	1	2 296e-3	3	3 814e-3	1	6 926e-3	7
78		min	025	2	0	7	0	6	-1 269e-5	2	-1 138e-4	7	7 322e-4	2
79	N40	max	- 007	2	- 079	2	0	1	4 667e-4	7	-7 434e-5	2	-2 409e-2	2
80		min	- 079	7	- 567	7	- 003	7	5 272e-5	2	-7 013e-4	7	-2 663e-1	7
81	N41	max	0	7	0	2	0	1	8 433e-3	7	8 48e-4	7	-2 408e-2	2

TPF-21

Envelope Joint Displacements (Continued)

	Joint		X [in]	LC	Y [in]	LC	Z [in]	LC	X Rotation	LC	Y Rotation	LC	Z Rotation [	LC
82		min	0	1	0	7	- 003	7	1 194e-3	2	9 277e-5	2	-2 664e-1	7
83	N42	max	0	7	0	2	0	1	-1 222e-3	2	5 639e-4	7	-2 409e-2	2
84		min	0	1	0	7	0	7	-8 779e-3	7	1 095e-4	1	-2 664e-1	7
85	N43	max	0	1	0	1	0	1	4 184e-3	7	-4 493e-6	2	-2 239e-2	2
86		min	0	7	0	7	- 003	7	8 563e-4	1	-6 205e-5	7	-2 561e-1	7
87	N44	max	0	6	0	1	0	1	-8 699e-4	1	-1 039e-4	1	-2 23e-2	2
88		min	0	1	0	7	0	7	-4 273e-3	7	-5 102e-4	7	-2 553e-1	7
89	N45	max	0	2	0	1	0	1	7 243e-4	7	1 507e-2	7	-2 31e-2	2
90		min	0	7	0	7	- 002	7	1 087e-4	1	1 495e-3	2	-2 595e-1	7
91	N46	max	0	6	0	2	0	7	-1 091e-4	1	1 508e-2	7	-2 313e-2	2
92		min	0	1	0	7	0	2	-7 272e-4	7	1.189e-3	2	-2 597e-1	7
93	N47	max	- 006	2	- 058	2	0	1	-8 387e-4	2	1 306e-3	7	-2 409e-2	2
94		min	- 042	7	- 414	7	- 001	7	-6 047e-3	7	7 906e-5	2	-2 663e-1	7
95	N48	max	02	7	- 041	1	0	1	-5 779e-4	1	-2 528e-5	1	-2 234e-2	2
96		min	004	1	- 199	7	- 001	7	-2 833e-3	7	-1 232e-4	7	-2 556e-1	7
97	N49	max	0	2	- 061	2	0	1	5 564e-3	7	-1 919e-4	2	-2 408e-2	2
98		min	- 003	7	- 431	7	- 004	7	7 682e-4	2	-1 873e-3	7	-2.663e-1	7
99	N50	max	0	7	- 043	1	0	1	2 596e-3	7	1 739e-4	7	-2 24e-2	2
100		min	0	1	- 209	7	- 003	7	5 288e-4	1	3 552e-5	1	-2 56e-1	7
101	N51	max	- 006	2	- 079	2	0	1	8 917e-4	7	-9 038e-5	2	-2 408e-2	2
102		min	- 077	7	- 565	7	- 003	7	1 106e-4	2	-9 426e-4	7	-2 663e-1	7
103	N52	max	0	2	- 063	2	0	1	5 267e-3	7	-2 066e-4	2	-2 408e-2	2
104		min	- 009	7	- 447	7	- 004	7	7 251e-4	2	-2 056e-3	7	-2 663e-1	7
105	N53	max	067	6	- 147	1	007	1	2 392e-4	3	2 814e-4	7	2 578e-3	7
106		min	006	1	- 831	7	- 009	6	1 042e-5	7	-2 729e-4	2	6 142e-4	2
107	N54	max	056	6	- 131	1	034	7	4 294e-3	7	-2 783e-4	1	3 39e-3	7
108		min	006	1	- 737	7	- 002	2	8 747e-4	2	-1 498e-3	7	7 071e-4	2
109	N55	max	067	6	- 162	1	008	3	2 019e-4	7	1 458e-4	4	1 316e-2	7
110		min	006	1	- 884	7	- 014	2	4 652e-5	2	-3 307e-5	1	2.35e-3	1
111	N56	max	056	6	- 148	1	008	3	3 991e-3	7	4 409e-4	6	9 308e-3	7
112		min	006	1	- 808	7	- 014	2	7.257e-4	1	1 257e-5	1	1 585e-3	1
113	N57	max	001	7	- 002	1	274	2	-4 026e-4	2	4 624e-4	7	-5 923e-4	2
114		min	0	1	- 008	7	- 06	7	-1 452e-3	7	7 995e-5	1	-1 689e-3	7
115	N58	max	001	7	- 002	1	008	3	-1 625e-3	1	-5 191e-6	1	2 908e-2	7
116		min	0	1	- 008	7	- 014	2	-8 767e-3	7	-6 076e-4	6	5 514e-3	1
117	N60	max	0	7	0	1	0	7	-5 01e-3	2	4 955e-4	7	6 499e-2	7
118		min	0	1	0	7	0	2	-2 876e-2	7	6.931e-5	2	1 145e-2	1
119	N61	max	0	6	0	1	0	3	-9 805e-5	1	-2 968e-8	1	1 327e-6	2
120		min	0	1	0	7	0	2	-5 068e-4	7	-4 568e-6	4	-1 325e-7	7
121	N62	max	0	6	0	1	0	1	1 313e-1	7	6 889e-6	6	-9 462e-5	2
122		min	0	1	0	7	0	7	2 301e-2	1	8 452e-7	1	-4 789e-4	7
123	N63	max	0	2	- 001	2	014	2	2 594e-3	7	2 396e-4	2	5 443e-3	7
124		min	0	7	- 006	7	- 002	7	6 467e-4	1	-2 118e-4	3	1 394e-3	1
125	N64	max	0	2	- 001	2	058	7	-6 521e-4	1	5 049e-4	7	6 17e-3	7
126		min	0	7	- 006	7	- 274	2	-2 696e-3	7	6 085e-5	1	1 496e-3	1
127	N65	max	0	2	0	2	0	7	-4 897e-3	1	-6 724e-5	1	-1 125e-2	2
128		min	0	7	0	7	0	2	-2 817e-2	7	-4 364e-4	7	-6 402e-2	7
129	N66	max	0	2	0	2	0	1	2 132e-4	7	1 965e-4	7	-1 518e-4	2
130		min	0	7	0	7	0	6	2 925e-6	1	1 796e-5	1	-5 542e-4	7
131	N67	max	0	7	0	1	0	1	1 318e-3	7	-3 432e-6	2	1 649e-4	7
132		min	0	1	0	7	0	7	4 043e-4	2	-1 319e-3	7	4 969e-5	2
133	N68	max	0	7	0	1	0	3	-1 859e-4	1	2 44e-3	7	1 652e-4	7
134		min	0	1	0	7	0	2	-4 355e-3	4	-3 395e-3	2	4 85e-5	2
135	N69	max	0	1	0	1	0	1	-6 797e-4	1	-8 724e-4	2	-7 994e-5	1
136		min	0	7	0	7	0	4	-4 507e-3	7	-4 635e-3	7	-2 039e-4	7
137	N70	max	0	1	0	1	0	1	3 641e-3	2	3 681e-4	7	-5 723e-5	1
138		min	0	7	0	7	0	7	-1 358e-3	7	-3 952e-3	4	-2 014e-4	7

TPF-22

Envelope Joint Displacements (Continued)

	Joint		X [in]	LC	Y [in]	LC	Z [in]	LC	X Rotation	LC	Y Rotation	LC	Z Rotation [	LC
139	N71	max	061	6	- 146	1	008	3	-7 304e-4	1	-5 333e-5	1	1 775e-2	7
140		min	003	1	- 796	7	- 014	2	-4 079e-3	7	-3 331e-4	6	3 263e-3	1
141	N72	max	061	6	- 006	1	0	3	-2 686e-4	1	-1 773e-4	1	-5 281e-5	2
142		min	003	1	- 042	7	0	6	-1 738e-3	7	-2 756e-3	6	-2 78e-4	7
143	N73	max	061	6	- 119	2	014	2	-5 575e-4	2	-3 118e-5	1	5 639e-3	7
144		min	003	1	- 55	7	- 002	7	-2 6e-3	7	-2 582e-4	6	1 416e-3	1
145	N74	max	055	6	- 005	1	0	3	1 816e-3	7	3 022e-3	6	-7 788e-6	2
146		min	005	1	- 035	7	0	2	2 786e-4	1	2 688e-4	1	-4 693e-5	7
147	N75	max	055	6	- 118	2	014	2	2 764e-3	7	3 821e-4	6	5 785e-3	7
148		min	005	1	- 543	7	- 002	7	5 919e-4	1	1 325e-5	1	1 432e-3	1
149	N76	max	0	2	0	1	0	5	-2 127e-4	1	1 605e-5	7	-2 534e-6	2
150		min	0	7	0	7	0	2	-5 754e-4	7	-1 526e-6	2	-2 747e-5	7
151	N77	max	0	2	0	1	0	1	2 62e-4	4	4 51e-6	2	2 608e-6	2
152		min	0	7	0	4	0	7	1 572e-4	1	-1 296e-6	7	-2.043e-6	7
153	N78	max	266	2	0	1	0	1	1 707e-3	7	4 806e-4	7	-1 441e-5	2
154		min	- 059	7	- 001	7	0	7	4 043e-4	2	-1 731e-3	2	-7 232e-5	7
155	N79	max	015	2	0	2	0	5	-7 886e-4	1	3 708e-5	2	-1 888e-4	1
156		min	-.005	5	- 002	7	0	2	-3 656e-3	7	-6 957e-5	5	-9 427e-4	7
157	N80	max	0	2	0	1	0	7	-3 417e-5	1	1 07e-3	7	5 167e-4	7
158		min	0	7	0	7	0	2	-9 732e-5	6	-4 579e-3	2	-2 863e-3	2
159	N81	max	0	4	0	1	0	1	1 06e-4	5	1 241e-4	2	-4 394e-5	1
160		min	0	5	0	7	0	7	3 914e-5	2	-5 7e-4	7	-5 033e-4	6
161	N82	max	184	2	0	1	184	2	2 968e-3	7	4 969e-4	7	2 395e-3	7
162		min	- 042	7	- 002	7	- 042	7	7 278e-4	1	-2 799e-3	2	5 794e-4	1
163	N83	max	0	7	0	1	0	1	2 235e-4	7	-1 653e-5	2	5 391e-4	7
164		min	0	1	0	7	0	7	4 036e-6	2	-2 023e-4	7	1 513e-4	1
165	N84	max	0	2	0	2	0	2	-9 793e-5	2	1 204e-4	7	4 178e-4	7
166		min	0	3	0	7	0	5	-5 952e-4	7	9 01e-6	2	7 869e-5	1
167	N85	max	014	2	006	7	006	2	-1 398e-4	1	1 527e-4	2	-5 845e-5	1
168		min	- 005	5	0	1	- 001	7	-8 917e-4	7	-3 26e-5	5	-3 695e-4	7
169	N86	max	0	7	0	2	0	1	1 873e-4	4	4 785e-5	7	2 118e-4	7
170		min	0	1	0	7	0	7	1 113e-4	1	6 199e-6	2	1 151e-4	2
171	N87	max	01	2	0	2	011	2	-7 415e-4	1	6 303e-5	2	-4 557e-4	2
172		min	- 002	5	-.002	7	- 002	5	-2 986e-3	7	-4.89e-6	7	-1 755e-3	7
173	N88	max	0	1	0	1	0	1	1 919e-4	4	-2 625e-6	2	-1 136e-4	2
174		min	0	7	0	7	0	7	1 133e-4	1	-4 44e-5	7	-2 108e-4	7
175	N89	max	009	2	- 018	2	012	2	2 702e-3	7	9 853e-5	2	6 68e-3	7
176		min	- 006	5	- 075	7	- 002	7	6 575e-4	1	-1 003e-5	7	1.622e-3	1
177	N90	max	0	3	0	2	0	2	-1 e-4	2	-1 804e-5	2	-7 736e-5	2
178		min	0	2	0	7	0	5	-5 935e-4	7	-1 189e-4	7	-4 174e-4	7
179	N91	max	0	1	121	7	008	3	-9 14e-4	1	2 172e-4	4	1 243e-2	7
180		min	- 005	7	021	1	- 014	2	-5 16e-3	7	-7 72e-5	1	2 201e-3	1
181	N92	max	0	5	0	7	0	5	5 468e-4	7	-2 336e-5	1	2 803e-4	7
182		min	0	2	0	3	0	2	1 537e-5	1	-1 65e-4	7	1 256e-4	1
183	N93	max	009	2	0	2	005	5	2 71e-3	7	2 329e-4	4	3 609e-4	7
184		min	- 005	5	0	7	- 009	2	4 003e-4	1	-1 406e-5	1	1 73e-4	2
185	N94	max	0	2	- 595	1	0	7	-1 626e-2	1	-2 663e-5	2	-1 632e-2	1
186		min	0	7	-3 391	7	0	2	-9 266e-2	7	-2 182e-4	7	-9 307e-2	7
187	N95	max	07	2	- 014	1	26	2	-4 901e-4	2	5 016e-4	7	-1 231e-3	2
188		min	- 022	7	- 058	7	- 056	7	-1 916e-3	7	-2 575e-3	2	-4 852e-3	7
189	N96	max	0	7	- 583	2	0	7	-1 593e-2	2	2 018e-4	7	9 145e-2	7
190		min	0	1	-3 332	7	0	2	-9 105e-2	7	2 464e-5	1	1 599e-2	1
191	N97	max	248	2	- 005	1	087	2	-3 58e-4	1	4 79e-4	7	-1 464e-4	2
192		min	- 055	7	- 02	7	- 023	7	-1 564e-3	7	-2 071e-3	2	-6 411e-4	7
193	N98	max	0	2	0	7	0	5	4 376e-4	7	1 234e-4	7	-1 208e-4	1
194		min	0	5	0	3	0	2	-9 968e-6	3	1 504e-5	1	-2 567e-4	7
195	N99	max	248	2	- 003	1	023	7	-2 317e-4	1	4 831e-4	7	3 81e-4	7

TPF-23

Envelope Joint Displacements (Continued)

	Joint		X [in]	LC	Y [in]	LC	Z [in]	LC	X Rotation	LC	Y Rotation	LC	Z Rotation [	LC
196		min	- 055	7	- 014	7	- 087	2	-9 414e-4	7	-2 07e-3	2	9 391e-5	1
197	N100	max	184	2	0	1	042	7	3 372e-3	7	4 674e-4	7	-5 97e-4	2
198		min	- 042	7	- 002	7	- 184	2	8 096e-4	2	-2 807e-3	2	-2 48e-3	7
199	N101	max	069	2	- 017	2	054	7	-6 25e-4	1	4 649e-4	7	6 427e-3	7
200		min	- 023	7	- 073	7	- 26	2	-2 591e-3	7	-2.583e-3	2	1 548e-3	1
201	N102	max	015	2	- 017	1	008	5	7 275e-3	7	9 966e-5	2	-6 233e-4	1
202		min	- 003	5	- 081	7	0	2	1 496e-3	1	-6 182e-5	5	-3 035e-3	7
203	N103	max	0	2	0	2	0	7	1 574e-3	2	1 246e-3	7	1 729e-4	7
204		min	0	7	0	7	0	2	-3 132e-4	7	-4 985e-3	2	-1 69e-3	4
205	N104	max	0	7	0	2	0	7	5 471e-4	7	7 098e-4	7	6 88e-4	7
206		min	0	1	0	7	0	2	-1 557e-3	2	-5 11e-3	2	-1 489e-3	2
207	N105	max	0	2	0	2	0	1	9 087e-4	7	1 077e-3	6	7 894e-4	7
208		min	0	7	0	7	0	7	1 444e-4	2	8 535e-5	1	7 548e-5	2
209	N106	max	0	7	0	2	0	1	7 177e-5	2	4 969e-4	6	4 238e-4	7
210		min	0	1	0	7	0	7	-2 865e-4	7	7 009e-5	1	-2 618e-5	2
211	N107	max	024	6	- 057	1	0	1	-5 948e-4	1	1 227e-4	6	-1 796e-3	1
212		min	001	1	- 304	7	- 005	6	-3 035e-3	7	1 705e-5	1	-1 004e-2	7
213	N108	max	024	6	- 061	1	005	6	2 753e-3	7	-1 892e-5	1	-1 688e-3	1
214		min	.002	1	- 323	7	0	1	5 331e-4	1	-1 346e-4	6	-9 526e-3	7
215	N109	max	0	7	0	1	0	3	3 645e-5	7	4 341e-5	4	3 916e-5	7
216		min	0	1	- 001	7	0	2	1.466e-5	1	5 38e-7	1	1 899e-6	2
217	N111	max	0	2	0	2	0	3	1 411e-4	3	-4 189e-5	2	-1 635e-4	1
218		min	0	7	0	7	0	7	9 654e-5	2	-1 203e-4	3	-2 575e-4	4
219	N112	max	0	2	0	1	0	1	1 24e-4	3	-8 75e-5	7	-1 674e-4	1
220		min	0	7	0	7	0	7	4 398e-5	2	-1 367e-4	3	-2 689e-4	6

Joint Coordinates and Temperatures

	Label	X [ft]	Y [ft]	Z [ft]	Temp [F]	Detach From Dia
1	N1	0	0	0	0	
2	N2	0	0	6.33	0	
3	N3	0	0	12 902	0	
4	N4	0	0	19 5	0	
5	N5	0	0	26	0	
6	N6	4 416	0	6 332409	0	
7	N7	4 416	0	12 902	0	
8	N8	4 416	0	19 5	0	
9	N9	4 416	0	26	0	
10	N10	5 5	0	-7 416	0	
11	N11	5 5	0	13 75	0	
12	N12	4 416	0	22 5	0	
13	N13	13	0	0	0	
14	N14	13	0	-3 333	0	
15	N15	13	0	6 333	0	
16	N16	13	0	8 3	0	
17	N17	20 5	0	0	0	
18	N18	20 5	0	-7 416	0	
19	N19	20 5	0	-5 666	0	
20	N20	20 5	0	6 333	0	
21	N21	20 5	0	12	0	
22	N22	20 5	0	13 75	0	
23	N23	28	0	0	0	
24	N24	28	0	-5 666	0	
25	N25	28	0	6 333	0	
26	N26	28	0	12	0	
27	N27	20 5	0	3	0	
28	N28	30	5 5	6 333	0	

TDF-24

Joint Coordinates and Temperatures (Continued)

	Label	X [ft]	Y [ft]	Z [ft]	Temp [F]	Detach From Dia
29	N29	0	-4 25	12 902	0	
30	N30	0	-4 25	19 5	0	
31	N31	0	-4 25	26	0	
32	N32	30 333	0	-5 666	0	
33	N33	30 333	0	12	0	
34	N34	5 5	0	0	0	
35	N35	5 5	0	6 333	0	
36	N36	6 416	0	26	0	
37	N37	6 416	0	22 5	0	
38	N38	29 416	-14	26	0	
39	N39	29 416	-14	22 5	0	
40	N40	30	5 5	3	0	
41	N41	30	5 5	-5 25	0	
42	N42	30	5 5	11 583	0	
43	N43	39	5 5	-5 25	0	
44	N44	39	5 5	11 583	0	
45	N45	34 5	5 5	- 5	0	
46	N46	34 5	5 05	7.25	0	
47	N47	30	5 5	7 25	0	
48	N48	39	5 5	7.25	0	
49	N49	30	5 5	- 5	0	
50	N50	39	5 5	- 5	0	
51	N51	30	5 5	2 75	0	
52	N52	30	5 5	- 25	0	
53	N53	25	8	2 75	0	
54	N54	25	8	- 25	0	
55	N55	23 25	8	2 75	0	
56	N56	23 25	8	- 25	0	
57	N57	23 25	8	-8 833	0	
58	N58	23 25	8	15 167	0	
59	N60	20 25	8	15 167	0	
60	N61	13	8	-1 583	0	
61	N62	13	8	7 917	0	
62	N63	2 75	8	15 167	0	
63	N64	2 75	8	-8 833	0	
64	N65	5 75	8	15 167	0	
65	N66	5 75	8	-8 833	0	
66	N67	5 75	5	15 167	0	
67	N68	5 75	5	-8 833	0	
68	N69	20 25	5	15 167	0	
69	N70	20 25	5	-8 833	0	
70	N71	23 25	8	6 333	0	
71	N72	13	8	6 333	0	
72	N73	2.75	8	6 333	0	
73	N74	13	8	- 25	0	
74	N75	2 75	8	- 25	0	
75	N76	13	8	22 417	0	
76	N77	13	8	-16 083	0	
77	N78	13	8	-19 083	0	
78	N79	13	8	25 417	0	
79	N80	13	5	-16 083	0	
80	N81	13	5	22 417	0	
81	N82	20 247845	8	-16 080845	0	
82	N83	20 25	8	-8 833	0	
83	N84	18 127	8	-3 706	0	
84	N85	9 077495	8	24 636765	0	
85	N86	18 127	8	-13 96	0	

TPF-25

Joint Coordinates and Temperatures (Continued)

	Label	X [ft]	Y [ft]	Z [ft]	Temp [F]	Detach From Dia.
86	N87	5 752155	8	22 414845	0	
87	N88	7 873	8	-13 96	0	
88	N89	3 530235	8	19.089505	0	
89	N90	7 873	8	-3 706	0	
90	N91	22 469765	8	19 089505	0	
91	N92	18 127	8	20 294	0	
92	N93	20 247845	8	22 414845	0	
93	N94	18 127	8	10 04	0	
94	N95	22 469765	8	-12 755505	0	
95	N96	7 873	8	10 04	0	
96	N97	16.922505	8	-18 302765	0	
97	N98	7 873	8	20 294	0	
98	N99	9 077495	8	-18 302765	0	
99	N100	5 752155	8	-16 080845	0	
100	N101	3 530235	8	-12 755505	0	
101	N102	16 922505	8	24 636765	0	
102	N103	18 127	5	-13 96	0	
103	N104	7 873	5	-13 96	0	
104	N105	18 127	5	20 294	0	
105	N106	7 873	5	20 294	0	
106	N107	15	0	6 333	0	
107	N108	15	0	0	0	
108	N109	4 416	0	0	0	
109	N111	0	-4 25	0	0	
110	N112	0	-4 25	6 33	0	

Member Distributed Loads (BLC 1 : DL)

	Member Label	Direction	Start Magnitude[k/ft,d	End Magnitude[k/ft,d	Start Location[ft,%]	End Location[ft,%]
1	M23	Y	- 02	- 02	0	0
2	M27	Y	- 02	- 02	0	0
3	M24	Y	- 02	- 02	0	0
4	M26	Y	- 02	- 02	0	0
5	M47	Y	- 02	- 02	0	0
6	M46	Y	- 02	- 02	0	0
7	M48	Y	- 02	- 02	0	0
8	M50	Y	- 02	-.02	0	0
9	M51	Y	- 02	- 02	0	0
10	M49	Y	- 02	- 02	0	0
11	M17	Y	- 033	- 033	0	0
12	M18	Y	-.067	- 067	0	0
13	M19	Y	- 067	- 067	0	0
14	M7	Y	- 067	- 067	0	0
15	M4	Y	- 033	- 033	0	0
16	M25	Y	- 033	- 033	0	0
17	M8	Y	- 033	- 033	0	0
18	M9	Y	- 045	- 045	0	0
19	M37	Y	- 045	- 045	0	0
20	M5	Y	- 045	- 045	0	0
21	M38	Y	- 045	- 045	0	0
22	M11	Y	- 045	- 045	0	0
23	M12	Y	- 045	- 045	0	0
24	M10	Y	- 06	- 06	0	0
25	M6	Y	- 06	- 06	0	0
26	M39	Y	- 035	- 035	0	0
27	M100	Y	- 035	- 035	0	0
28	M115	Y	- 035	- 035	0	0

TPF-26

Member Distributed Loads (BLC 1 : DL) (Continued)

	Member Label	Direction	Start Magnitude[k/ft,d	End Magnitude[k/ft,d	Start Location[ft,%]	End Location[ft,%]
29	M40	Y	- 035	- 035	0	0
30	M107	Y	- 035	- 035	0	0
31	M116	Y	- 035	- 035	0	0
32	M41	Y	- 05	- 05	0	0
33	M65	Y	- 065	- 065	0	0
34	M66	Y	- 065	- 065	0	0
35	M64	Y	- 065	- 065	0	0
36	M63	Y	- 065	- 065	0	0
37	M55	Y	- 065	- 065	0	0
38	M56	Y	- 065	- 065	0	0
39	M62	Y	- 065	- 065	0	0
40	M57	Y	- 065	- 065	0	0
41	M87	Y	- 025	- 025	0	0
42	M88	Y	- 025	- 025	0	0
43	M89	Y	- 025	- 025	0	0
44	M90	Y	- 025	- 025	0	0
45	M91	Y	- 025	- 025	0	0
46	M92	Y	- 025	- 025	0	0
47	M93	Y	- 025	- 025	0	0
48	M94	Y	- 025	- 025	0	0
49	M102	Y	- 025	- 025	0	0
50	M101	Y	- 025	- 025	0	0
51	M84	Y	- 025	- 025	0	0
52	M99	Y	- 025	- 025	0	0
53	M114	Y	- 025	- 025	0	0
54	M113	Y	- 025	- 025	0	0
55	M112	Y	- 025	- 025	0	0
56	M111	Y	- 025	- 025	0	0
57	M54	Y	- 01	- 01	0	0
58	M52	Y	- 01	- 01	0	0
59	M16	Y	- 01	- 01	0	0
60	M15	Y	- 01	- 01	0	0
61	M14	Y	- 01	- 01	0	0
62	M13	Y	- 01	- 01	0	0
63	M71	Y	- 01	- 01	0	0
64	M70	Y	- 01	- 01	0	0
65	M75	Y	- 01	- 01	0	0
66	M82	Y	- 01	- 01	0	0
67	M81	Y	- 02	- 02	0	0
68	M76	Y	- 02	- 02	0	0
69	M69	Y	- 02	- 02	0	0
70	M72	Y	- 02	- 02	0	0

Member Distributed Loads (BLC 2 : LL)

	Member Label	Direction	Start Magnitude[k/ft,d	End Magnitude[k/ft,d	Start Location[ft,%]	End Location[ft,%]
1	M27	Y	- 2	- 2	0	0
2	M23	Y	- 2	- 2	0	0
3	M24	Y	- 2	- 2	0	0
4	M26	Y	- 2	- 2	0	0
5	M46	Y	- 2	- 2	0	0
6	M47	Y	- 2	- 2	0	0
7	M48	Y	- 2	- 2	0	0
8	M50	Y	- 2	- 2	0	0
9	M51	Y	- 2	- 2	0	0
10	M49	Y	- 2	- 2	0	0
11	M17	Y	- 13	- 13	0	0
12	M18	Y	- 27	- 27	0	0

TPF-27

Member Distributed Loads (BLC 2 : LL) (Continued)

	Member Label	Direction	Start Magnitude[k/ft,d	End Magnitude[k/ft,d	Start Location[ft,%]	End Location[ft,%]
13	M19	Y	- 27	- 27	0	0
14	M7	Y	- 27	- 27	0	0
15	M4	Y	- 125	- 125	0	0
16	M25	Y	- 125	- 125	0	0
17	M8	Y	- 125	- 125	0	0
18	M5	Y	- 15	- 15	0	0
19	M9	Y	- 15	- 15	0	0
20	M37	Y	- 1	- 1	0	0
21	M38	Y	- 1	- 1	0	0
22	M11	Y	- 13	- 13	0	0
23	M12	Y	- 13	- 13	0	0
24	M10	Y	- 25	- 25	0	0
25	M6	Y	- 25	- 25	0	0
26	M41	Y	- 18	- 18	0	0
27	M39	Y	- 1	- 1	0	0
28	M40	Y	- 1	- 1	0	0
29	M100	Y	- 1	- 1	0	0
30	M107	Y	- 1	- 1	0	0
31	M116	Y	- 1	- 1	0	0
32	M115	Y	- 1	- 1	0	0
33	M64	Y	- 26	- 26	0	0
34	M66	Y	- 26	- 26	0	0
35	M63	Y	- 26	- 26	0	0
36	M65	Y	- 26	- 26	0	0
37	M57	Y	- 26	- 26	0	0
38	M62	Y	- 26	- 26	0	0
39	M56	Y	- 26	- 26	0	0
40	M55	Y	- 26	- 26	0	0
41	M111	Y	- 06	- 06	0	0
42	M112	Y	- 06	- 06	0	0
43	M114	Y	- 06	- 06	0	0
44	M113	Y	- 06	- 06	0	0
45	M99	Y	- 06	- 06	0	0
46	M84	Y	- 06	- 06	0	0
47	M101	Y	- 06	- 06	0	0
48	M102	Y	- 06	- 06	0	0
49	M87	Y	- 06	- 06	0	0
50	M88	Y	- 06	- 06	0	0
51	M89	Y	- 06	- 06	0	0
52	M90	Y	- 06	- 06	0	0
53	M91	Y	- 06	- 06	0	0
54	M92	Y	- 06	- 06	0	0
55	M93	Y	- 06	- 06	0	0
56	M94	Y	- 06	- 06	0	0
57	M70	Y	- 04	- 04	0	0
58	M71	Y	- 04	- 04	0	0
59	M82	Y	- 04	- 04	0	0
60	M75	Y	- 04	- 04	0	0
61	M72	Y	- 08	- 08	0	0
62	M69	Y	- 08	- 08	0	0
63	M76	Y	- 08	- 08	0	0
64	M81	Y	- 08	- 08	0	0

Member Distributed Loads (BLC 3 : ELx)

	Member Label	Direction	Start Magnitude[k/ft,d	End Magnitude[k/ft,d	Start Location[ft,%]	End Location[ft,%]
1	M17	X	01	01	0	0
2	M18	X	017	017	0	0

TPF-28

Member Distributed Loads (BLC 3 : ELx) (Continued)

	Member Label	Direction	Start Magnitude[k/ft,d	End Magnitude[k/ft,d	Start Location[ft,%]	End Location[ft,%]
3	M19	X	017	017	0	0
4	M7	X	017	017	0	0
5	M4	X	01	01	0	0
6	M8	X	01	01	0	0
7	M25	X	01	01	0	0
8	M9	X	014	014	0	0
9	M5	X	014	014	0	0
10	M10	X	016	016	0	0
11	M6	X	016	016	0	0
12	M11	X	01	01	0	0
13	M12	X	01	01	0	0
14	M46	X	005	005	0	0
15	M47	X	005	005	0	0
16	M42	X	013	013	0	0
17	M43	X	013	013	0	0
18	M44	X	013	013	0	0
19	M45	X	013	013	0	0
20	M48	X	005	005	0	0
21	M50	X	005	005	0	0
22	M51	X	005	005	0	0
23	M49	X	005	005	0	0
24	M63	X	015	015	0	0
25	M65	X	015	015	0	0
26	M64	X	015	015	0	0
27	M66	X	015	015	0	0
28	M57	X	015	015	0	0
29	M62	X	015	015	0	0
30	M56	X	015	015	0	0
31	M55	X	015	015	0	0
32	M99	X	005	005	0	0
33	M114	X	005	005	0	0
34	M113	X	005	005	0	0
35	M84	X	005	005	0	0
36	M101	X	005	005	0	0
37	M102	X	005	005	0	0
38	M112	X	005	005	0	0
39	M111	X	005	005	0	0
40	M87	X	005	005	0	0
41	M88	X	005	005	0	0
42	M89	X	005	005	0	0
43	M90	X	005	005	0	0
44	M91	X	005	005	0	0
45	M92	X	005	005	0	0
46	M93	X	005	005	0	0
47	M94	X	005	005	0	0
48	M23	X	005	005	0	0
49	M27	X	005	005	0	0
50	M24	X	005	005	0	0
51	M26	X	005	005	0	0

Member Distributed Loads (BLC 4 : ELz)

	Member Label	Direction	Start Magnitude[k/ft,d	End Magnitude[k/ft,d	Start Location[ft,%]	End Location[ft,%]
1	M23	Z	005	005	0	0
2	M27	Z	005	005	0	0
3	M24	Z	005	005	0	0
4	M26	Z	005	005	0	0
5	M21	Z	01	01	0	0

TPF-29

Member Distributed Loads (BLC 4 : ELz) (Continued)

	Member Label	Direction	Start Magnitude[k/ft,d	End Magnitude[k/ft,d	Start Location[ft,%]	End Location[ft,%]
6	M15	Z	01	01	0	0
7	M14	Z	01	01	0	0
8	M28	Z	.01	01	0	0
9	M2	Z	016	016	0	0
10	M1	Z	016	016	0	0
11	M3	Z	016	016	0	0
12	M13	Z	01	.01	0	0
13	M46	Z	005	005	0	0
14	M47	Z	005	005	0	0
15	M48	Z	005	005	0	0
16	M50	Z	005	005	0	0
17	M49	Z	005	005	0	0
18	M51	Z	005	005	0	0
19	M39	Z	01	01	0	0
20	M40	Z	01	01	0	0
21	M41	Z	015	015	0	0
22	M52	Z	015	015	0	0
23	M54	Z	015	015	0	0
24	M53	Z	02	02	0	0
25	M102	Z	005	005	0	0
26	M101	Z	005	005	0	0
27	M84	Z	005	005	0	0
28	M99	Z	.005	005	0	0
29	M114	Z	005	005	0	0
30	M113	Z	005	005	0	0
31	M112	Z	005	005	0	0
32	M111	Z	005	005	0	0
33	M88	Z	005	005	0	0
34	M87	Z	005	005	0	0
35	M89	Z	005	005	0	0
36	M90	Z	005	005	0	0
37	M91	Z	005	005	0	0
38	M92	Z	005	005	0	0
39	M93	Z	005	005	0	0
40	M94	Z	005	005	0	0

Joint Loads and Enforced Displacements

Joint Label	L,D,M	Direction	Magnitude[(k,k-ft), (in,rad), (k*s^2/ft
No Data to Print			

Hot Rolled Steel Properties

	Label	E [ksi]	G [ksi]	Nu	Therm (\1E5 F)	Density[k/ft^3]	Yield[ksi]
1	A36 Gr 36	29000	11154	3	65	49	36
2	A572 Gr 50	29000	11154	3	65	49	50
3	A992	29000	11154	3	65	49	50
4	A500 Gr 42	29000	11154	3	65	49	42
5	A500 Gr 46	29000	11154	3	65	49	46

Member Primary Data

	Label	I Joint	J Joint	K Joint	Rotate(deg)	Section/Shape	Type	Design List	Material	Design Rules
1	M122	N46	N50			Horiz Brace	HBrace	Wide Flange	A36 Gr 36	Typical
2	M121	N52	N46			Horiz. Brace	HBrace	Wide Flange	A36 Gr 36	Typical
3	M120	N2	N1			Vert Brace	VBrace	Single Angle	A36 Gr 36	Typical

TPF-30

Member Primary Data (Continued)

	Label	I Joint	J Joint	K Joint	Rotate(deg)	Section/Shape	Type	Design List	Material	Design Rules
4	M119	N3	N2			Vert Brace	VBrace	Single Angle	A36 Gr 36	Typical
5	M118	N4	N3			Vert Brace	VBrace	Single Angle	A36 Gr 36	Typical
6	M117	N5	N4			Vert Brace	VBrace	Single Angle	A36 Gr 36	Typical
7	M116	N45	N43			M2	Beam	Wide Flange	A992	Typical
8	M115	N45	N41			M2	Beam	Wide Flange	A992	Typical
9	M114	N85	N79			M2	Beam	Wide Flange	A992	Typical
10	M113	N87	N85			M2	Beam	Wide Flange	A992	Typical
11	M112	N89	N87			M2	Beam	Wide Flange	A992	Typical
12	M111	N63	N89			M2	Beam	Wide Flange	A992	Typical
13	M110	N87	N106			Vert Brace	VBrace	Single Angle	A36 Gr 36	Typical
14	M109	N93	N105			Vert Brace	VBrace	Single Angle	A36 Gr 36	Typical
15	M108	N79	N81			Vert Brace	VBrace	Single Angle	A36 Gr 36	Typical
16	M107	N46	N44			M2	Beam	Wide Flange	A992	Typical
17	M106	N100	N104			Vert Brace	VBrace	Single Angle	A36 Gr 36	Typical
18	M105	N78	N80			Vert Brace	VBrace	Single Angle	A36 Gr 36	Typical
19	M104	N88	N100			M2	Beam	Wide Flange	A992	Typical
20	M103	N86	N82			M2	Beam	Wide Flange	A992	Typical
21	M102	N91	N58			M2	Beam	Wide Flange	A992	Typical
22	M101	N93	N91			M2	Beam	Wide Flange	A992	Typical
23	M100	N42	N46			M2	Beam	Wide Flange	A992	Typical
24	M99	N79	N102			M2	Beam	Wide Flange	A992	Typical
25	M98	N72	N56			Horiz Brace	HBrace	Wide Flange	A36 Gr 36	Typical
26	M97	N75	N72			Horiz Brace	HBrace	Wide Flange	A36 Gr 36	Typical
27	M96	N82	N103			Vert Brace	VBrace	Single Angle	A36 Gr 36	Typical
28	M95	N77	N78			M2	Beam	Wide Flange	A992	Typical
29	M94	N101	N64			M2	Beam	Wide Flange	A992	Typical
30	M93	N100	N101			M2	Beam	Wide Flange	A992	Typical
31	M92	N99	N100			M2	Beam	Wide Flange	A992	Typical
32	M91	N78	N99			M2	Beam	Wide Flange	A992	Typical
33	M90	N97	N78			M2	Beam	Wide Flange	A992	Typical
34	M89	N82	N97			M2	Beam	Wide Flange	A992	Typical
35	M88	N95	N82			M2	Beam	Wide Flange	A992	Typical
36	M87	N57	N95			M2	Beam	Wide Flange	A992	Typical
37	M86	N98	N87			M2	Beam	Wide Flange	A992	Typical
38	M85	N92	N93			M2	Beam	Wide Flange	A992	Typical
39	M84	N102	N93			M2	Beam	Wide Flange	A992	Typical
40	M83	N76	N79			M2	Beam	Wide Flange	A992	Typical
41	M82	N90	N61			Upper Angle	Beam	Single Angle	A36 Gr 36	Typical
42	M81	N66	N90			Upper Angle	Beam	Single Angle	A36 Gr 36	Typical
43	M80	N88	N66			Horiz Brace	HBrace	Wide Flange	A36 Gr 36	Typical
44	M79	N77	N88			Horiz Brace	HBrace	Wide Flange	A36 Gr 36	Typical
45	M78	N86	N77			Horiz Brace	HBrace	Wide Flange	A36 Gr 36	Typical
46	M77	N83	N86			Horiz Brace	HBrace	Wide Flange	A36 Gr 36	Typical
47	M76	N84	N83			Upper Angle	Beam	Single Angle	A36 Gr 36	Typical
48	M75	N61	N84			Upper Angle	Beam	Single Angle	A36 Gr 36	Typical
49	M74	N98	N76			Horiz Brace	HBrace	Wide Flange	A36 Gr 36	Typical
50	M73	N65	N98			Horiz Brace	HBrace	Wide Flange	A36 Gr 36	Typical
51	M72	N96	N65			Upper Angle	Beam	Single Angle	A36 Gr 36	Typical
52	M71	N62	N96			Upper Angle	Beam	Single Angle	A36 Gr 36	Typical
53	M70	N94	N62			Upper Angle	Beam	Single Angle	A36 Gr 36	Typical
54	M69	N60	N94			Upper Angle	Beam	Single Angle	A36 Gr 36	Typical
55	M68	N92	N60			Horiz Brace	HBrace	Wide Flange	A36 Gr 36	Typical
56	M67	N76	N92			Horiz. Brace	HBrace	Wide Flange	A36 Gr 36	Typical
57	M66	N74	N75			LANDING	Beam	Channel	A36 Gr 36	Typical
58	M65	N56	N74			LANDING	Beam	Channel	A36 Gr 36	Typical
59	M64	N72	N73			LANDING	Beam	Channel	A36 Gr 36	Typical
60	M63	N71	N72			LANDING	Beam	Channel	A36 Gr 36	Typical

TPF-3

Member Primary Data (Continued)

	Label	I Joint	J Joint	K Joint	Rotate(deg)	Section/Shape	Type	Design List	Material	Design Rules
61	M62	N64	N66			M2	Beam	Wide Flange	A992	Typical
62	M61	N58	N69			Vert Brace	VBrace	Single Angle	A36 Gr 36	Typical
63	M60	N70	N57			Vert Brace	VBrace	Single Angle	A36 Gr 36	Typical
64	M59	N68	N64			Vert Brace	VBrace	Single Angle	A36 Gr 36	Typical
65	M58	N67	N63			Vert Brace	VBrace	Single Angle	A36 Gr 36	Typical
66	M57	N83	N57			M2	Beam	Wide Flange	A992	Typical
67	M56	N65	N63			M2	Beam	Wide Flange	A992	Typical
68	M55	N58	N60			M2	Beam	Wide Flange	A992	Typical
69	M54	N63	N64			M5	Beam	Wide Flange	A992	Typical
70	M53	N62	N61			M2	Beam	Wide Flange	A992	Typical
71	M52	N58	N57			M5	Beam	Wide Flange	A992	Typical
72	M51	N54	N56			STRINGER	Beam	Channel	A36 Gr 36	Typical
73	M50	N52	N54			STRINGER	Beam	Channel	A36 Gr 36	Typical
74	M49	N53	N55		180	STRINGER	Beam	Channel	A36 Gr 36	Typical
75	M48	N51	N53		180	STRINGER	Beam	Channel	A36 Gr 36	Typical
76	M47	N40	N27			STRINGER	Beam	Channel	A36 Gr 36	Typical
77	M46	N28	N20		180	STRINGER	Beam	Channel	A36 Gr 36	Typical
78	M45	N45	N50			LANDING	Beam	Channel	A36 Gr 36	Typical
79	M44	N45	N49			LANDING	Beam	Channel	A36 Gr 36	Typical
80	M43	N46	N48			LANDING	Beam	Channel	A36 Gr 36	Typical
81	M42	N46	N47			LANDING	Beam	Channel	A36 Gr 36	Typical
82	M41	N46	N45			LANDING	Beam	Channel	A36 Gr 36	Typical
83	M40	N44	N43			LANDING	Beam	Channel	A36 Gr 36	Typical
84	M39	N42	N41			MC8X22 8	Beam	Channel	A36 Gr 36	Typical
85	M38	N108	N19			M1	Beam	Wide Flange	A992	Typical
86	M37	N107	N21			M1	Beam	Wide Flange	A992	Typical
87	M36	N23	N19			Horiz Brace	HBrace	Wide Flange	A36 Gr 36	Typical
88	M35	N20	N23			Horiz Brace	HBrace	Wide Flange	A36 Gr 36	Typical
89	M34	N20	N26			Horiz Brace	HBrace	Wide Flange	A36 Gr 36	Typical
90	M33	N13	N20			Horiz. Brace	HBrace	Wide Flange	A36 Gr 36	Typical
91	M32	N35	N13			Horiz Brace	HBrace	Wide Flange	A36 Gr 36	Typical
92	M31	N8	N5			Horiz Brace	HBrace	Wide Flange	A36 Gr 36	Typical
93	M30	N3	N8			Horiz Brace	HBrace	Wide Flange	A36 Gr 36	Typical
94	M29	N6	N3			Horiz Brace	HBrace	Wide Flange	A36 Gr 36	Typical
95	M28	N1	N6			Horiz Brace	HBrace	Wide Flange	A36 Gr 36	Typical
96	M27	N37	N39		180	STRINGER	Beam	Channel	A36 Gr 36	Typical
97	M26	N12	N37		180	STRINGER	Beam	Channel	A36 Gr 36	Typical
98	M25	N13	N34			M1	Beam	Wide Flange	A992	Typical
99	M24	N9	N36			STRINGER	Beam	Channel	A36 Gr 36	Typical
100	M23	N36	N38			STRINGER	Beam	Channel	A36 Gr 36	Typical
101	M22	N7	N29			Vert Brace	VBrace	Single Angle	A36 Gr 36	Typical
102	M21	N8	N30			Vert Brace	VBrace	Single Angle	A36 Gr 36	Typical
103	M20	N9	N31			Vert Brace	VBrace	Single Angle	A36 Gr 36	Typical
104	M19	N3	N7			M2	Beam	Wide Flange	A992	Typical
105	M18	N4	N8			M2	Beam	Wide Flange	A992	Typical
106	M17	N5	N9			M2	Beam	Wide Flange	A992	Typical
107	M16	N8	N9			M3	Beam	Wide Flange	A992	Typical
108	M15	N7	N8			M3	Beam	Wide Flange	A992	Typical
109	M14	N6	N7			M3	Beam	Wide Flange	A992	Typical
110	M13	N26	N24			M3	Beam	Wide Flange	A992	Typical
111	M12	N32	N19			M2	Beam	Wide Flange	A992	Typical
112	M11	N33	N21			M2	Beam	Wide Flange	A992	Typical
113	M10	N20	N25			M2	Beam	Wide Flange	A992	Typical
114	M9	N15	N20			M2	Beam	Wide Flange	A992	Typical
115	M8	N35	N15			M2	Beam	Wide Flange	A992	Typical
116	M7	N2	N6			M2	Beam	Wide Flange	A992	Typical
117	M6	N17	N23			M2	Beam	Wide Flange	A992	Typical

TPF-32

Member Primary Data (Continued)

	Label	I Joint	J Joint	K Joint	Rotate(deg)	Section/Shape	Type	Design List	Material	Design Rules
118	M5	N13	N17			M2	Beam	Wide Flange	A992	Typical
119	M4	N1	N109			M2	Beam	Wide Flange	A992	Typical
120	M3	N22	N18			M1	Beam	Wide Flange	A992	Typical
121	M2	N11	N10			M1	Beam	Wide Flange	A992	Typical
122	M1	N16	N14			M2	Beam	Wide Flange	A992	Typical
123	M123	N6	N109			M2	Beam	Wide Flange	A992	Typical
124	M124	N6	N112			Vert Brace	VBrace	Single Angle	A36 Gr 36	Typical
125	M125	N109	N111			Vert Brace	VBrace	Single Angle	A36 Gr 36	Typical

Envelope Member Section Forces

	Member	Sec		Axial[k]	LC	y Shear[k]	LC	z Shear[k]	LC	Torque[k-ft]	LC	y-y Mome	LC	z-z Moment[k-ft]	LC
1	M122	1	max	3 329	7	026	4	0	7	0	7	0	1	0	1
2			min	693	2	015	1	- 004	2	0	2	0	1	0	1
3		2	max	3 329	7	013	4	0	7	0	7	031	7	- 021	1
4			min	693	2	008	1	- 002	2	0	2	014	2	- 036	4
5		3	max	3 328	7	0	1	0	1	0	7	041	7	- 028	1
6			min	694	2	0	1	0	1	0	2	018	2	- 048	4
7		4	max	3 327	7	- 008	1	002	4	0	7	031	7	- 021	1
8			min	695	2	- 013	4	0	7	0	2	014	2	- 036	4
9		5	max	3 327	7	- 015	1	004	4	0	7	0	1	0	1
10			min	696	2	- 026	4	0	7	0	2	0	1	0	1
11	M121	1	max	7 097	7	025	7	004	4	0	2	0	1	0	1
12			min	1 049	2	015	1	- 002	3	0	7	0	1	0	1
13		2	max	7 098	7	013	7	002	4	0	2	034	4	- 013	2
14			min	1 05	2	007	1	- 001	3	0	7	015	1	- 032	3
15		3	max	7 098	7	0	1	0	1	0	2	045	4	- 017	2
16			min	1 052	2	0	1	0	1	0	7	019	1	- 042	3
17		4	max	7 099	7	- 007	1	001	1	0	2	034	4	- 013	2
18			min	1 053	2	- 013	7	- 002	2	0	7	015	1	- 032	3
19		5	max	7 099	7	- 015	1	002	1	0	2	0	1	0	1
20			min	1 055	2	- 025	7	- 004	2	0	7	0	1	0	1
21	M120	1	max	004	1	023	3	0	1	0	7	0	1	0	1
22			min	0	2	014	1	- 004	2	0	2	0	1	0	1
23		2	max	002	1	011	3	0	1	0	7	019	3	- 011	1
24			min	0	2	007	1	- 002	2	0	2	008	2	- 023	4
25		3	max	0	1	0	1	0	1	0	7	025	3	- 015	1
26			min	0	1	0	1	0	1	0	2	011	2	- 03	4
27		4	max	0	2	- 007	1	002	2	0	7	019	3	- 011	1
28			min	- 002	1	- 011	3	0	1	0	2	008	2	- 023	4
29		5	max	0	2	- 014	1	004	2	0	7	0	1	0	1
30			min	- 004	1	- 023	3	0	1	0	2	0	1	0	1
31	M119	1	max	004	1	024	3	0	1	0	7	0	1	0	1
32			min	0	2	014	1	- 004	2	0	2	0	1	0	1
33		2	max	002	1	012	3	0	1	0	7	021	3	- 012	1
34			min	0	2	007	1	- 002	2	0	2	009	2	- 024	4
35		3	max	0	1	0	1	0	1	0	7	027	3	- 016	1
36			min	0	1	0	1	0	1	0	2	011	2	- 032	4
37		4	max	0	2	- 007	1	002	2	0	7	021	3	- 012	1
38			min	- 002	1	- 012	3	0	1	0	2	009	2	- 024	4
39		5	max	0	2	- 014	1	004	2	0	7	0	1	0	1
40			min	- 004	1	- 024	3	0	1	0	2	0	1	0	1
41	M118	1	max	004	1	024	3	0	1	0	7	0	1	0	1
42			min	0	2	014	1	- 004	2	0	1	0	1	0	1
43		2	max	002	1	012	3	0	1	0	7	021	3	- 012	1
44			min	0	2	007	1	- 002	2	0	1	009	2	- 024	4
45		3	max	0	1	0	1	0	1	0	7	028	3	- 017	1

TPF-33

Envelope Member Section Forces (Continued)

	Member	Sec		Axial[k]	LC	y Shear[k]	LC	z Shear[k]	LC	Torque[k-ft]	LC	y-y Mome	LC	z-z Moment[k-ft]	LC
46			min	0	1	0	1	0	1	0	1	012	2	- 033	4
47		4	max	0	2	- 007	1	002	2	0	7	021	3	- 012	1
48			min	- 002	1	- 012	3	0	1	0	1	009	2	- 024	4
49		5	max	0	2	- 014	1	004	2	0	7	0	1	0	1
50			min	- 004	1	- 024	3	0	1	0	1	0	1	0	1
51	M117	1	max	004	1	023	3	0	1	0	7	0	1	0	1
52			min	0	2	.014	1	- 004	2	0	1	0	1	0	1
53		2	max	002	1	012	3	0	1	0	7	02	3	- 012	1
54			min	0	2	007	1	- 002	2	0	1	008	2	- 024	4
55		3	max	0	1	0	1	0	1	0	7	027	3	- 016	1
56			min	0	1	0	1	0	1	0	1	011	2	- 032	4
57		4	max	0	2	- 007	1	002	2	0	7	02	3	- 012	1
58			min	- 002	1	- 012	3	0	1	0	1	008	2	- 024	4
59		5	max	0	2	- 014	1	004	2	0	7	0	1	0	1
60			min	- 004	1	- 023	3	0	1	0	1	0	1	0	1
61	M116	1	max	- 217	1	491	7	0	7	0	7	0	1	0	1
62			min	-1 031	7	098	1	- 007	4	0	4	0	1	0	1
63		2	max	- 22	1	246	7	0	7	0	7	0	7	- 121	1
64			min	-1 031	7	049	1	- 003	4	0	4	- 008	4	- 602	7
65		3	max	- 224	1	0	1	0	1	0	7	0	7	- 161	1
66			min	-1.031	7	0	1	0	1	0	4	- 011	4	- 803	7
67		4	max	- 227	1	- 049	1	003	2	0	7	0	7	- 121	1
68			min	-1 031	7	- 246	7	0	7	0	4	- 008	4	- 602	7
69		5	max	- 23	1	- 098	1	007	2	0	7	0	1	0	1
70			min	-1 031	7	- 491	7	0	7	0	4	0	1	0	1
71	M115	1	max	- 186	1	491	7	006	3	0	7	0	1	0	1
72			min	-1 63	7	098	1	- 007	4	0	2	0	1	0	1
73		2	max	- 189	1	246	7	003	3	0	7	008	3	- 121	1
74			min	-1 63	7	049	1	- 003	4	0	2	- 008	4	- 602	7
75		3	max	- 192	1	0	1	0	1	0	7	01	3	- 161	1
76			min	-1.63	7	0	1	0	1	0	2	- 011	4	- 803	7
77		4	max	- 196	1	- 049	1	003	2	0	7	008	3	- 121	1
78			min	-1.63	7	- 246	7	- 003	1	0	2	- 008	4	- 602	7
79		5	max	- 199	1	- 098	1	007	2	0	7	0	1	0	1
80			min	-1 63	7	- 491	7	- 006	1	0	2	0	1	0	1
81	M114	1	max	193	3	002	3	037	3	048	7	- 004	7	- 058	2
82			min	019	7	- 007	7	004	7	011	2	- 088	1	- 225	7
83		2	max	194	3	- 023	1	044	3	048	7	008	4	- 048	2
84			min	019	7	- 107	7	004	7	011	2	- 047	1	- 168	7
85		3	max	195	3	- 047	1	05	3	048	7	021	4	- 011	7
86			min	019	7	- 207	7	004	7	011	2	0	1	- 022	3
87		4	max	196	3	- 071	1	056	3	048	7	052	3	246	7
88			min	019	7	- 307	7	004	7	011	2	01	7	046	1
89		5	max	197	3	- 095	1	062	3	048	7	111	3	603	7
90			min	019	7	- 407	7	004	7	011	2	014	7	129	1
91	M113	1	max	178	3	394	7	014	4	- 012	2	111	3	547	7
92			min	018	2	097	2	- 06	1	- 042	7	- 034	2	139	2
93		2	max	182	3	293	7	01	4	- 012	2	053	3	204	7
94			min	02	7	073	2	- 055	1	- 042	7	- 022	2	054	2
95		3	max	185	3	193	7	007	4	- 012	2	003	7	- 008	2
96			min	02	7	049	2	- 05	1	- 042	7	- 013	2	- 04	7
97		4	max	189	3	093	7	003	4	- 012	2	0	7	- 045	2
98			min	.02	7	.025	2	- 044	1	- 042	7	- 046	1	- 183	7
99		5	max	192	3	002	3	0	4	- 012	2	- 004	7	- 058	2
100			min	02	7	- 007	7	- 039	1	- 042	7	- 088	1	- 226	7
101	M112	1	max	152	3	- 013	2	042	3	171	7	032	2	- 112	1
102			min	- 004	2	- 048	7	- 006	2	042	1	-.086	3	- 468	7

TPF-34

Envelope Member Section Forces (Continued)

	Member	Sec		Axial[k]	LC	y Shear[k]	LC	z Shear[k]	LC	Torque[k-ft]	LC	y-y Mome.	LC	z-z Moment[k-ft]	LC
103		2	max	157	3	- 037	2	046	3	171	7	023	2	- 086	1
104			min	0	2	- 149	7	- 011	2	042	1	- 042	3	- 369	7
105		3	max	162	3	- 061	2	049	3	171	7	01	4	- 037	1
106			min	.003	2	- 249	7	- 016	2	042	1	0	7	- 171	7
107		4	max	167	3	- 086	2	053	3	171	7	056	3	128	7
108			min	007	2	- 349	7	- 022	2	042	1	- 01	2	036	2
109		5	max	173	3	- 11	2	056	3	171	7	111	3	526	7
110			min	.01	2	- 449	7	- 027	2	042	1	- 034	2	134	2
111	M111	1	max	132	3	352	7	02	2	- 004	1	0	1	109	7
112			min	- 011	2	083	1	- 024	3	- 021	7	0	1	02	1
113		2	max	138	3	252	7	014	2	- 004	1	017	2	- 051	1
114			min	- 009	2	059	1	- 023	3	- 021	7	- 023	3	- 193	7
115		3	max	144	3	152	7	008	2	- 004	1	028	2	- 098	1
116			min	- 008	2	035	1	- 022	3	- 021	7	- 045	3	- 394	7
117		4	max	15	3	052	7	002	2	- 004	1	033	2	- 121	1
118			min	- 007	2	011	1	- 02	3	- 021	7	- 066	3	- 496	7
119		5	max	156	3	- 013	2	- 003	7	- 004	1	032	2	- 119	1
120			min	- 006	2	- 048	7	- 019	3	-.021	7	- 086	3	- 498	7
121	M110	1	max	1 234	7	012	3	0	7	0	1	0	1	0	1
122			min	317	2	005	2	- 002	3	0	1	0	1	0	1
123		2	max	1 239	7	006	3	0	7	0	1	006	7	- 004	2
124			min	321	2	003	2	0	3	0	1	002	2	- 008	3
125		3	max	1 245	7	0	1	0	1	0	1	008	7	- 005	2
126			min	325	2	0	1	0	1	0	1	002	2	- 011	3
127		4	max	1 25	7	- 003	2	0	1	0	1	006	7	- 004	2
128			min	328	1	- 006	3	0	7	0	1	002	2	- 008	3
129		5	max	1 255	7	- 005	2	002	1	0	1	0	1	0	1
130			min	33	1	- 012	3	0	7	0	1	0	1	0	1
131	M109	1	max	661	7	012	4	002	3	0	1	0	1	0	1
132			min	204	2	008	1	- 002	2	0	1	0	1	0	1
133		2	max	666	7	006	4	0	3	0	1	008	3	- 003	1
134			min	206	2	004	1	0	2	0	1	003	2	- 008	4
135		3	max	671	7	0	1	0	1	0	1	011	3	- 004	1
136			min	209	2	0	1	0	1	0	1	004	2	- 011	4
137		4	max	677	7	- 004	2	0	4	0	1	008	3	- 003	1
138			min	212	2	- 006	3	0	1	0	1	003	2	- 008	4
139		5	max	682	7	- 008	2	002	4	0	1	0	1	0	1
140			min	214	2	- 012	3	- 002	1	0	1	0	1	0	1
141	M108	1	max	1 355	7	013	3	0	1	0	1	0	1	0	1
142			min	327	2	006	2	- 003	2	0	1	0	1	0	1
143		2	max	1 36	7	006	3	0	1	0	1	007	3	- 005	1
144			min	33	2	003	2	- 001	2	0	1	002	2	-.008	4
145		3	max	1 365	7	0	1	0	1	0	1	01	3	- 006	1
146			min	333	1	0	1	0	1	0	1	003	2	- 01	4
147		4	max	1 371	7	- 003	2	001	2	0	1	007	3	- 005	1
148			min	335	1	- 006	3	0	1	0	1	002	2	- 008	4
149		5	max	1 376	7	- 006	2	003	2	0	1	0	1	0	1
150			min	337	1	- 013	3	0	1	0	1	0	1	0	1
151	M107	1	max	034	7	469	7	006	2	001	7	0	1	0	1
152			min	0	2	094	1	- 006	1	0	2	0	1	0	1
153		2	max	017	7	234	7	003	2	001	7	007	2	- 111	1
154			min	0	2	.047	1	-.003	1	0	2	- 007	1	- 551	7
155		3	max	0	1	0	1	0	1	001	7	009	2	- 148	1
156			min	0	1	0	1	0	1	0	2	- 01	1	- 734	7
157		4	max	0	2	- 047	1	003	1	001	7	007	2	- 111	1
158			min	- 017	7	- 234	7	- 003	2	0	2	- 007	1	- 551	7
159		5	max	0	2	- 094	1	006	1	001	7	0	1	0	1

TPF-35

Envelope Member Section Forces (Continued)

	Member	Sec		Axial[k]	LC	y Shear[k]	LC	z Shear[k]	LC	Torque[k-ft]	LC	y-y Mome	LC	z-z Moment[k-ft]	LC
160			min	- 034	7	- 469	7	- 006	2	0	2	0	1	0	1
161	M106	1	max	1 358	7	011	7	002	4	0	1	0	1	0	1
162			min	- 341	2	- 005	1	- 002	1	0	1	0	1	0	1
163		2	max	1 364	7	005	7	0	4	0	1	006	4	- 002	2
164			min	345	2	003	1	0	1	0	1	002	1	- 006	3
165		3	max	1 369	7	0	1	0	1	0	1	009	4	- 002	2
166			min	349	2	0	1	0	1	0	1	002	1	- 009	3
167		4	max	1 375	7	- 003	2	0	3	0	1	006	4	- 002	2
168			min	353	2	- 005	7	0	2	0	1	002	1	- 006	3
169		5	max	1 38	7	- 005	2	002	3	0	1	0	1	0	1
170			min	357	2	- 011	7	- 002	2	0	1	0	1	0	1
171	M105	1	max	1 04	7	011	4	003	4	0	1	0	1	0	1
172			min	262	1	005	1	0	1	0	1	0	1	0	1
173		2	max	1 046	7	005	4	001	4	0	1	008	4	- 002	2
174			min	267	1	002	1	0	1	0	1	003	1	- 006	7
175		3	max	1 051	7	0	1	0	1	0	1	01	4	- 003	2
176			min	271	1	0	1	0	1	0	1	003	1	- 008	7
177		4	max	1 057	7	- 002	1	0	1	0	1	008	4	- 002	2
178			min	274	2	- 005	7	- 001	2	0	1	003	1	- 006	7
179		5	max	1 062	7	- 005	1	0	1	0	1	0	1	0	1
180			min	277	2	- 011	7	- 003	2	0	1	0	1	0	1
181	M104	1	max	- 162	1	023	7	003	1	002	7	0	1	0	1
182			min	- 97	7	014	1	- 003	2	0	2	0	1	0	1
183		2	max	- 163	1	011	7	001	1	002	7	002	1	- 008	1
184			min	- 97	7	007	1	- 001	2	0	2	- 002	2	- 013	7
185		3	max	- 164	1	0	1	0	1	002	7	002	1	- 01	1
186			min	- 97	7	0	1	0	1	0	2	- 002	2	- 017	7
187		4	max	- 166	1	- 007	2	001	4	002	7	002	1	- 008	1
188			min	- 97	7	-.011	3	- 001	3	0	2	- 002	2	- 013	7
189		5	max	- 167	1	- 014	2	003	4	002	7	0	1	0	1
190			min	- 97	7	- 023	3	- 003	3	0	2	0	1	0	1
191	M103	1	max	- 159	1	023	3	0	7	0	2	0	1	0	1
192			min	- 956	7	014	1	- 003	1	-.002	7	0	1	0	1
193		2	max	- 16	1	011	3	0	7	0	2	0	7	- 008	1
194			min	- 956	7	007	1	- 001	1	- 002	7	-.002	1	- 013	3
195		3	max	- 162	1	0	1	0	1	0	2	0	7	- 01	1
196			min	- 956	7	0	1	0	1	- 002	7	- 002	1	- 017	3
197		4	max	- 163	1	- 007	1	001	3	0	2	0	7	- 008	1
198			min	- 956	7	-.011	6	0	7	- 002	7	- 002	1	- 013	3
199		5	max	- 165	1	- 014	1	003	3	0	2	0	1	0	1
200			min	- 956	7	- 023	6	0	7	- 002	7	0	1	0	1
201	M102	1	max	153	1	- 045	1	055	4	287	7	031	7	- 031	2
202			min	013	7	- 244	7	.019	7	057	1	- 068	1	- 059	7
203		2	max	147	1	- 069	1	061	4	287	7	072	6	235	7
204			min	013	7	- 344	7	019	7	057	1	- 041	1	026	1
205		3	max	141	1	- 093	1	067	4	287	7	132	6	629	7
206			min	.013	7	- 444	7	019	7	057	1	- 013	1	107	1
207		4	max	135	1	- 117	1	073	4	287	7	197	6	1 123	7
208			min	.013	7	- 544	7	019	7	057	1	016	1	212	1
209		5	max	129	2	- 141	1	079	4	287	7	266	6	1 717	7
210			min	013	7	- 644	7	019	7	057	1	046	1	341	1
211	M101	1	max	172	3	157	7	012	7	243	7	099	1	- 039	1
212			min	019	7	.051	2	- 048	1	041	1	- 017	7	- 338	7
213		2	max	167	3	056	7	012	7	243	7	052	1	- 078	1
214			min	019	7	026	2	-.045	1	041	1	- 005	7	- 445	7
215		3	max	162	3	005	3	012	7	243	7	011	5	- 093	1
216			min	019	7	- 044	7	- 042	1	041	1	- 001	2	- 451	7

TPF-36

Envelope Member Section Forces (Continued)

	Member	Sec		Axial[k]	LC	y Shear[k]	LC	z Shear[k]	LC	Torque[k-ft]	LC	y-y Mome	LC	z-z Moment[k-ft]	LC
217		4	max	157	3	- 021	1	012	7	243	7	019	7	- 084	1
218			min	019	7	- 144	7	- 038	1	041	1	- 031	1	- 358	7
219		5	max	151	3	- 045	1	012	7	243	7	031	7	- 05	2
220			min	019	7	- 244	7	- 035	1	041	1	- 068	1	- 164	7
221	M100	1	max	0	1	469	7	0	7	0	1	0	1	0	1
222			min	- 034	7	.093	2	- 006	1	0	7	0	1	0	1
223		2	max	0	1	234	7	0	7	0	1	0	7	- 11	2
224			min	- 017	7	047	2	- 003	1	0	7	- 007	1	- 551	7
225		3	max	0	1	0	1	0	1	0	1	0	7	- 146	2
226			min	0	1	0	1	0	1	0	7	- 01	1	- 734	7
227		4	max	017	7	- 047	2	003	1	0	1	0	7	- 11	2
228			min	0	1	- 234	7	0	7	0	7	- 007	1	- 551	7
229		5	max	034	7	- 093	2	006	1	0	1	0	1	0	1
230			min	0	1	- 469	7	0	7	0	7	0	1	0	1
231	M99	1	max	198	3	52	7	- 008	7	- 039	1	111	3	578	7
232			min	02	7	118	1	- 064	3	- 187	7	014	7	124	1
233		2	max	197	3	42	7	- 008	7	- 039	1	05	3	108	7
234			min	02	7	094	1	- 058	3	- 187	7	006	7	018	1
235		3	max	195	3	32	7	- 008	7	- 039	1	- 002	7	- 063	1
236			min	02	7	07	1	- 052	3	- 187	7	- 012	4	- 262	7
237		4	max	194	3	22	7	- 008	7	- 039	1	- 01	7	- 121	1
238			min	02	7	045	1	- 045	3	- 187	7	- 053	3	- 532	7
239		5	max	193	3	12	7	- 008	7	- 039	1	- 018	7	- 154	1
240			min	02	7	021	1	- 039	3	- 187	7	- 095	3	- 702	7
241	M98	1	max	632	1	035	3	0	7	0	7	0	1	0	1
242			min	- 192	6	021	1	- 005	1	0	1	0	1	0	1
243		2	max	63	1	018	3	0	7	0	7	057	7	- 04	2
244			min	- 19	6	011	1	- 003	1	0	1	025	1	- 065	3
245		3	max	628	1	0	1	0	1	0	7	075	7	- 053	2
246			min	- 188	6	0	1	0	1	0	1	034	1	- 087	3
247		4	max	626	1	- 011	1	003	3	0	7	057	7	- 04	2
248			min	- 186	6	- 018	7	0	7	0	1	025	1	- 065	3
249		5	max	625	1	- 021	1	005	3	0	7	0	1	0	1
250			min	- 184	6	- 035	7	0	7	0	1	0	1	0	1
251	M97	1	max	548	1	035	5	003	2	002	7	0	1	0	1
252			min	- 036	7	021	1	- 005	1	0	1	0	1	0	1
253		2	max	549	1	018	5	002	2	002	7	062	4	- 028	2
254			min	- 036	7	011	1	- 003	1	0	1	025	1	- 065	3
255		3	max	551	1	0	1	0	1	002	7	083	4	- 038	2
256			min	- 036	7	0	1	0	1	0	1	034	1	- 087	3
257		4	max	553	1	- 011	1	003	3	002	7	062	4	- 028	2
258			min	- 036	7	- 018	3	- 002	4	0	1	025	1	- 065	3
259		5	max	555	1	- 021	1	005	3	002	7	0	1	0	1
260			min	-.036	7	- 035	3	- 003	4	0	1	0	1	0	1
261	M96	1	max	1 339	7	012	4	002	3	0	1	0	1	0	1
262			min	337	1	005	1	0	7	0	1	0	1	0	1
263		2	max	1 344	7	006	4	0	3	0	1	008	4	- 002	1
264			min	341	1	003	1	0	7	0	1	004	1	- 006	7
265		3	max	1 35	7	0	1	0	1	0	1	011	4	- 002	1
266			min	345	2	0	1	0	1	0	1	005	1	- 008	7
267		4	max	1 355	7	- 003	1	0	7	0	1	008	4	- 002	1
268			min	347	2	- 006	4	0	4	0	1	004	1	- 006	7
269		5	max	1 36	7	- 005	1	0	7	0	1	0	1	0	1
270			min	35	2	- 012	4	- 002	4	0	1	0	1	0	1
271	M95	1	max	- 069	1	023	3	0	1	0	1	0	1	0	1
272			min	-.741	7	014	2	- 004	4	0	7	0	1	0	1
273		2	max	- 071	1	011	3	0	1	0	1	0	1	- 008	2

TPF-37

Envelope Member Section Forces (Continued)

	Member	Sec		Axial[k]	LC	y Shear[k]	LC	z Shear[k]	LC	Torque[k-ft]	LC	y-y Mome	LC	z-z Moment[k-ft]	LC
274			min	- 741	7	007	2	- 002	4	0	7	- 002	4	- 013	3
275		3	max	- 073	1	0	1	0	1	0	1	0	1	- 01	2
276			min	- 741	7	0	1	0	1	0	7	- 003	4	- 017	3
277		4	max	- 075	1	- 007	1	002	2	0	1	0	1	- 008	2
278			min	- 741	7	- 011	7	0	1	0	7	- 002	4	- 013	3
279		5	max	- 077	1	- 014	1	004	2	0	1	0	1	0	1
280			min	- 741	7	- 023	7	0	1	0	7	0	1	0	1
281	M94	1	max	0	7	077	7	- 002	7	004	7	017	1	- 115	1
282			min	- 033	3	019	2	- 116	4	0	1	- 221	4	- 481	7
283		2	max	0	7	- 005	1	- 002	7	004	7	012	1	- 122	1
284			min	- 027	3	- 023	7	- 122	4	0	1	- 34	4	- 508	7
285		3	max	0	7	- 029	1	- 002	7	004	7	006	1	- 105	2
286			min	- 026	4	- 123	7	- 128	4	0	1	- 465	4	- 436	7
287		4	max	0	7	- 053	1	- 002	7	004	7	- 001	1	- 063	2
288			min	- 027	4	- 223	7	- 134	4	0	1	- 596	4	- 263	7
289		5	max	0	7	- 078	1	- 002	7	004	7	- 01	1	01	7
290			min	- 028	4	- 323	7	- 14	4	0	1	-.734	4	002	1
291	M93	1	max	- 001	7	478	7	023	1	- 043	1	131	4	665	7
292			min	- 053	3	115	2	- 078	4	- 18	7	- 045	1	.16	2
293		2	max	- 001	7	378	7	019	1	- 043	1	05	4	237	7
294			min	- 055	4	091	2	- 083	4	- 18	7	- 024	1	057	2
295		3	max	- 001	7	278	7	016	1	- 043	1	0	7	- 021	1
296			min	- 059	4	067	2	- 088	4	- 18	7	- 035	2	- 091	7
297		4	max	- 001	7	178	7	012	1	- 043	1	007	1	- 076	1
298			min	- 062	4	043	2	- 093	4	- 18	7	- 125	4	- 318	7
299		5	max	- 001	7	077	7	009	1	- 043	1	017	1	- 107	1
300			min	- 066	4	019	2	- 098	4	-.18	7	- 221	4	- 446	7
301	M92	1	max	- 001	7	- 013	2	011	4	087	7	114	4	- 079	1
302			min	- 074	3	- 052	7	- 013	1	021	2	002	7	- 329	7
303		2	max	- 001	7	- 037	2	008	4	087	7	123	4	- 054	1
304			min	- 071	3	-.152	7	- 018	1	021	2	002	7	- 226	7
305		3	max	- 001	7	- 061	2	004	4	087	7	129	4	- 006	1
306			min	- 068	3	- 252	7	- 023	1	021	2	003	7	- 024	7
307		4	max	- 001	7	- 085	2	0	6	087	7	132	4	278	7
308			min	- 064	3	- 352	7	-.028	1	021	2	- 014	1	067	2
309		5	max	- 001	7	- 109	2	0	7	087	7	131	4	681	7
310			min	-.063	4	- 453	7	- 034	1	021	2	- 045	1	164	2
311	M91	1	max	- 001	7	348	7	041	3	- 011	1	0	2	255	7
312			min	- 079	3	084	1	001	7	- 045	7	- 069	3	06	1
313		2	max	- 001	7	248	7	035	3	- 011	1	03	2	- 011	2
314			min	- 077	3	059	1	001	7	- 045	7	- 03	3	- 043	7
315		3	max	- 001	7	148	7	029	3	- 011	1	059	2	- 059	2
316			min	- 076	3	.035	1	001	7	- 045	7	0	7	- 241	7
317		4	max	- 001	7	048	7	028	4	- 011	1	087	4	- 082	2
318			min	- 075	3	011	1	001	7	- 045	7	0	7	- 339	7
319		5	max	- 001	7	- 013	2	026	4	- 011	1	114	4	- 081	2
320			min	- 074	3	- 052	7	001	7	- 045	7	002	7	- 337	7
321	M90	1	max	034	2	043	7	026	2	056	7	047	3	- 089	1
322			min	- 074	3	011	2	- 017	3	013	1	- 113	2	- 375	7
323		2	max	028	2	- 013	1	027	2	056	7	028	3	- 088	1
324			min	-.075	3	- 057	7	- 023	3	013	1	- 087	2	- 368	7
325		3	max	022	2	- 037	1	028	2	056	7	002	1	- 063	2
326			min	- 076	3	- 157	7	- 029	3	013	1	- 059	4	- 261	7
327		4	max	015	2	- 061	1	029	2	056	7	- 001	7	- 013	2
328			min	- 077	3	-.257	7	- 035	3	013	1	- 031	4	- 054	7
329		5	max	009	2	- 085	1	031	2	056	7	0	2	253	7
330			min	- 079	3	- 357	7	- 041	3	013	1	- 069	3	06	1

TPF-38

Envelope Member Section Forces (Continued)

	Member	Sec		Axial[k]	LC	y Shear[k]	LC	z Shear[k]	LC	Torque[k-ft]	LC	y-y Mome	LC	z-z Moment[k-ft]	LC
331	M89	1	max	062	2	443	7	034	1	- 022	1	004	7	605	7
332			min	- 061	3	107	2	- 003	4	- 092	7	- 128	2	149	2
333		2	max	057	2	343	7	028	1	- 022	1	004	7	212	7
334			min	-.064	3	083	2	0	7	- 092	7	- 129	2	054	2
335		3	max	051	2	243	7	023	1	- 022	1	012	3	- 017	1
336			min	-.068	3	059	2	0	7	- 092	7	- 127	2	- 081	7
337		4	max	046	2	143	7	018	1	- 022	1	032	3	- 064	1
338			min	- 071	3	035	2	0	7	- 092	7	- 122	2	- 275	7
339		5	max	041	2	043	7	013	1	- 022	1	047	3	- 087	1
340			min	- 074	3	011	2	0	7	- 092	7	- 113	2	- 368	7
341	M88	1	max	065	2	- 018	2	002	7	147	7	219	2	- 117	1
342			min	- 033	3	- 073	7	- 097	2	037	2	- 003	7	- 496	7
343		2	max	061	2	- 042	2	002	7	147	7	124	2	- 087	1
344			min	- 038	3	- 173	7	- 092	2	037	2	0	7	- 373	7
345		3	max	058	2	- 066	2	002	7	147	7	035	4	- 033	1
346			min	- 043	3	- 273	7	- 087	2	037	2	- 007	1	- 15	7
347		4	max	054	2	- 09	2	002	7	147	7	003	7	173	7
348			min	- 048	3	- 373	7	- 082	2	037	2	- 049	2	044	2
349		5	max	051	2	- 114	2	002	7	147	7	004	7	596	7
350			min	- 053	3	- 473	7	- 076	2	037	2	- 128	2	146	2
351	M87	1	max	028	2	328	7	009	3	- 011	1	726	2	0	1
352			min	- 009	3	078	1	- 139	2	- 054	7	- 015	5	- 005	7
353		2	max	026	2	228	7	008	3	- 011	1	59	2	- 067	1
354			min	- 015	3	054	1	- 133	2	- 054	7	- 009	7	- 282	7
355		3	max	025	2	127	7	007	3	- 011	1	46	2	- 109	1
356			min	- 021	3	03	1	- 127	2	- 054	7	- 007	7	- 46	7
357		4	max	024	2	027	7	006	3	- 011	1	337	2	- 128	1
358			min	- 027	3	006	1	- 121	2	- 054	7	- 005	7	- 537	7
359		5	max	023	2	- 018	2	005	5	- 011	1	219	2	- 122	1
360			min	- 033	3	- 073	7	- 115	2	- 054	7	- 003	7	- 514	7
361	M86	1	max	- 187	2	023	4	003	1	- 001	1	0	1	0	1
362			min	- 91	5	014	1	0	7	- 005	7	0	1	0	1
363		2	max	- 189	2	011	4	001	1	- 001	1	002	1	- 008	1
364			min	- 909	5	007	1	0	7	- 005	7	0	7	- 013	4
365		3	max	- 19	2	0	1	0	1	- 001	1	002	1	- 01	1
366			min	- 908	5	0	1	0	1	- 005	7	0	7	- 017	4
367		4	max	- 192	2	- 007	2	0	7	- 001	1	002	1	- 008	1
368			min	- 907	5	- 011	7	- 001	4	- 005	7	0	7	- 013	4
369		5	max	- 193	2	- 014	2	0	7	- 001	1	0	1	0	1
370			min	- 906	5	- 023	7	- 003	4	-.005	7	0	1	0	1
371	M85	1	max	- 249	2	023	4	003	2	- 001	1	0	1	0	1
372			min	- 552	5	014	1	- 003	1	- 006	7	0	1	0	1
373		2	max	- 247	2	011	4	001	2	- 001	1	002	2	- 008	1
374			min	- 551	5	007	1	- 001	1	- 006	7	- 002	1	- 013	4
375		3	max	- 246	2	0	1	0	1	- 001	1	002	2	- 01	1
376			min	- 55	5	0	1	0	1	- 006	7	- 002	1	- 017	4
377		4	max	- 244	2	- 007	1	001	1	- 001	1	002	2	- 008	1
378			min	- 549	5	- 011	7	- 001	2	- 006	7	- 002	1	- 013	4
379		5	max	- 243	2	- 014	1	003	1	- 001	1	0	1	0	1
380			min	- 547	5	- 023	7	- 003	2	- 006	7	0	1	0	1
381	M84	1	max	193	3	12	7	038	1	096	7	- 018	7	- 157	1
382			min	022	7	021	1	0	7	023	1	- 095	3	- 721	7
383		2	max	19	3	02	7	043	1	096	7	- 018	7	- 167	1
384			min	022	7	- 004	3	0	7	023	1	- 055	3	- 79	7
385		3	max	186	3	- 026	2	048	1	096	7	- 008	1	- 152	1
386			min	022	7	- 08	7	0	7	023	1	-.031	6	- 76	7
387		4	max	183	3	- 05	2	053	1	096	7	043	1	- 113	1

Envelope Member Section Forces (Continued)

	Member	Sec		Axial[k]	LC	y Shear[k]	LC	z Shear[k]	LC	Torque[k-ft]	LC	y-y Mome	LC	z-z Moment[k-ft]	LC
388			min	022	7	- 18	7	0	7	023	1	- 018	7	- 63	7
389		5	max	179	3	- 075	2	059	1	096	7	099	1	- 051	1
390			min	022	7	- 28	7	0	7	023	1	- 017	7	- 4	7
391	M83	1	max	- 299	2	023	3	004	4	003	7	0	1	0	1
392			min	- 995	5	014	1	0	1	0	1	0	1	0	1
393		2	max	- 299	2	011	3	002	4	003	7	002	4	- 008	1
394			min	- 994	5	007	1	0	1	0	1	0	1	- 013	3
395		3	max	- 299	2	0	1	0	1	003	7	003	4	- 01	1
396			min	- 992	5	0	1	0	1	0	1	0	1	- 017	3
397		4	max	- 299	2	- 007	2	0	1	003	7	002	4	- 008	1
398			min	- 991	5	- 011	7	- 002	2	0	1	0	1	- 013	3
399		5	max	- 299	2	- 014	2	0	1	003	7	0	1	0	1
400			min	-.989	5	- 023	7	- 004	2	0	1	0	1	0	1
401	M82	1	max	02	6	166	7	009	6	0	2	- 008	1	- 003	1
402			min	- 007	1	033	2	- 004	1	0	7	- 073	7	- 025	7
403		2	max	022	6	083	7	009	7	0	2	0	4	- 036	2
404			min	- 006	1	016	2	- 001	1	0	7	- 005	7	- 184	7
405		3	max	023	6	0	7	009	7	0	2	026	7	- 046	2
406			min	- 005	1	0	2	0	1	0	7	003	1	- 235	7
407		4	max	025	6	- 016	1	009	7	0	2	018	7	- 035	2
408			min	- 004	1	- 083	7	0	2	0	7	002	1	- 177	7
409		5	max	027	6	- 033	1	01	5	0	2	- 003	1	- 001	1
410			min	- 003	1	- 166	7	0	2	0	7	- 028	7	- 011	7
411	M81	1	max	018	7	305	7	004	2	0	7	- 01	1	- 002	1
412			min	- 016	1	05	1	- 006	7	0	3	- 044	7	- 01	7
413		2	max	018	6	153	7	002	2	0	7	054	7	- 051	2
414			min	- 014	1	025	1	- 006	7	0	3	006	1	- 312	7
415		3	max	019	6	0	7	0	1	0	7	082	7	- 067	2
416			min	- 012	1	0	1	- 006	7	0	3	012	1	- 416	7
417		4	max	02	6	- 025	2	001	1	0	7	039	7	- 052	2
418			min	- 01	1	- 151	7	-.006	6	0	3	007	1	- 32	7
419		5	max	02	6	- 049	2	002	1	0	7	- 008	1	- 003	1
420			min	- 007	1	- 304	7	- 008	6	0	3	- 073	7	- 025	7
421	M80	1	max	001	2	017	7	001	2	0	7	001	7	0	7
422			min	-.003	3	01	1	- 008	7	0	3	- 006	3	- 007	3
423		2	max	0	2	009	7	0	2	0	7	006	4	- 011	2
424			min	- 001	3	005	1	- 008	7	0	3	003	1	- 021	7
425		3	max	0	1	0	7	0	1	0	7	009	4	- 014	2
426			min	0	1	0	1	-.008	7	0	3	002	7	- 034	7
427		4	max	001	1	- 005	2	- 001	1	0	7	004	3	- 013	1
428			min	0	4	- 008	3	-.008	7	0	3	- 009	7	-.039	7
429		5	max	003	1	- 009	2	- 002	1	0	7	- 006	1	- 008	1
430			min	- 001	4	-.016	3	- 009	6	0	3	- 028	7	- 036	7
431	M79	1	max	003	2	016	4	004	5	0	7	- 004	2	- 004	2
432			min	-.001	3	01	1	001	2	0	1	- 01	5	- 01	5
433		2	max	001	2	008	4	003	5	0	7	006	4	- 01	2
434			min	0	3	005	1	0	2	0	1	.003	1	- 018	7
435		3	max	0	1	0	2	002	7	0	7	011	5	- 012	1
436			min	0	1	0	7	0	2	0	1	006	2	- 021	4
437		4	max	0	1	- 005	2	002	7	0	7	009	7	- 01	1
438			min	- 001	4	- 008	7	0	1	0	1	003	2	- 017	4
439		5	max	001	1	- 01	2	002	7	0	7	0	7	0	7
440			min	- 003	4	- 016	7	-.002	1	0	1	- 007	3	- 006	3
441	M78	1	max	003	2	016	7	002	1	0	2	0	7	0	7
442			min	0	7	.01	1	- 003	6	0	7	- 007	3	- 006	3
443		2	max	001	2	008	7	0	1	0	2	009	7	- 01	1
444			min	0	7	005	1	- 003	6	0	7	004	2	- 017	4

TDF-40

Envelope Member Section Forces (Continued)

	Member	Sec		Axial[k]	LC	y Shear[k]	LC	z Shear[k]	LC	Torque[k-ft]	LC	y-y Mome	LC	z-z Moment[k-ft]	LC
445		3	max	0	1	0	7	0	1	0	2	011	5	- 012	1
446			min	0	1	0	1	- 002	7	0	7	005	2	- 022	4
447		4	max	0	7	- 005	2	0	2	0	2	006	3	- 011	1
448			min	- 001	4	- 008	3	- 003	5	0	7	003	2	- 019	6
449		5	max	0	7	- 01	2	0	2	0	2	- 004	2	- 004	2
450			min	- 003	4	- 016	3	- 004	5	0	7	- 01	5	- 01	5
451	M77	1	max	003	1	016	4	008	7	0	3	- 004	2	- 005	2
452			min	0	7	009	1	- 002	2	0	7	- 029	7	- 034	7
453		2	max	001	1	008	4	008	7	0	3	003	3	- 013	1
454			min	0	7	005	1	0	2	0	7	- 01	7	- 037	7
455		3	max	0	1	0	2	008	7	0	3	009	3	- 014	1
456			min	0	1	0	7	0	2	0	7	002	7	- 033	7
457		4	max	0	7	- 005	2	008	7	0	3	005	3	- 011	1
458			min	- 001	3	- 008	7	0	1	0	7	003	2	- 021	7
459		5	max	0	7	- 01	2	008	6	0	3	0	7	0	7
460			min	- 003	3	- 016	7	0	1	0	7	- 006	3	- 007	3
461	M76	1	max	018	7	304	7	006	7	0	4	- 008	1	- 003	1
462			min	- 007	1	049	2	- 004	2	0	7	- 073	7	- 025	7
463		2	max	018	7	152	7	006	7	0	4	039	7	- 052	1
464			min	- 01	1	025	2	-.002	2	0	7	005	2	- 321	7
465		3	max	018	7	0	1	006	7	0	4	082	7	- 068	1
466			min	- 012	1	0	7	0	1	0	7	01	2	- 417	7
467		4	max	018	7	- 025	1	007	6	0	4	055	7	- 052	1
468			min	- 014	1	- 153	7	0	1	0	7	006	2	- 314	7
469		5	max	018	7	- 05	1	008	6	0	4	- 006	2	- 001	2
470			min	- 016	1	- 305	7	002	1	0	7	- 043	7	- 012	7
471	M75	1	max	017	7	166	7	- 002	2	0	7	- 003	1	- 001	1
472			min	- 016	2	033	1	- 01	5	0	2	- 028	7	- 011	7
473		2	max	017	7	083	7	- 001	2	0	7	018	7	- 036	2
474			min	- 014	2	016	1	- 009	7	0	2	002	2	- 177	7
475		3	max	017	7	0	2	0	2	0	7	026	7	- 047	2
476			min	- 012	2	0	7	- 009	7	0	2	003	1	- 235	7
477		4	max	017	7	- 016	2	001	1	0	7	002	4	- 036	2
478			min	- 009	2	- 083	7	- 009	7	0	2	- 005	7	- 184	7
479		5	max	017	7	- 033	2	004	1	0	7	- 008	1	- 003	1
480			min	- 007	2	- 166	7	- 009	7	0	2	- 073	7	- 025	7
481	M74	1	max	0	7	013	3	001	2	0	7	026	7	- 01	1
482			min	- 003	4	006	7	- 003	5	0	2	0	2	- 047	7
483		2	max	0	7	005	3	0	2	0	7	027	7	- 017	2
484			min	- 001	4	- 002	7	- 002	5	0	2	006	1	- 05	7
485		3	max	0	1	- 002	1	0	2	0	7	02	7	- 017	2
486			min	0	1	- 01	7	- 001	7	0	2	006	1	- 046	7
487		4	max	001	2	- 006	1	001	1	0	7	006	4	- 013	2
488			min	0	7	- 018	7	-.001	7	0	2	003	1	- 033	7
489		5	max	003	2	- 011	1	003	1	0	7	- 004	1	- 003	1
490			min	0	7	- 026	7	- 002	6	0	2	- 017	7	- 013	7
491	M73	1	max	0	7	081	7	- 001	2	- 007	2	- 027	1	303	7
492			min	- 003	1	021	2	- 022	7	- 038	7	- 148	7	049	2
493		2	max	0	7	073	7	- 003	2	- 007	2	- 013	2	206	7
494			min	- 001	1	016	2	- 022	7	- 038	7	- 095	7	029	1
495		3	max	0	1	065	7	- 004	1	- 007	2	- 003	2	116	7
496			min	0	1	011	2	- 022	7	- 038	7	- 049	7	011	1
497		4	max	001	3	057	7	- 003	1	- 007	2	001	4	034	7
498			min	0	7	007	2	- 022	7	- 038	7	- 011	7	- 003	3
499		5	max	003	3	049	7	- 003	1	- 007	2	019	7	- 009	1
500			min	0	7	002	2	-.022	7	- 038	7	0	2	- 04	7
501	M72	1	max	209	7	109	7	074	7	241	7	- 009	1	- 139	1

TPF-41

Envelope Member Section Forces (Continued)

	Member	Sec		Axial[k]	LC	y Shear[k]	LC	z Shear[k]	LC	Torque[k-ft]	LC	y-y Mome	LC	z-z Moment[k-ft]	LC
502			min	043	2	015	1	015	1	042	2	- 041	7	- 789	7
503		2	max	209	7	- 01	2	074	7	241	7	071	7	- 135	2
504			min	042	2	- 043	7	014	1	042	2	011	1	-797	7
505		3	max	209	7	- 034	2	074	7	241	7	113	7	- 1	2
506			min	042	2	- 196	7	012	2	042	2	018	1	- 607	7
507		4	max	209	7	- 059	2	074	7	241	7	084	7	- 034	2
508			min	041	2	- 348	7	01	2	042	2	013	1	- 217	7
509		5	max	209	7	- 084	2	074	7	241	7	- 004	1	371	7
510			min	04	2	- 5	7	008	2	042	2	- 015	6	064	2
511	M71	1	max	2	7	441	7	- 011	1	- 061	2	- 013	2	866	7
512			min	038	1	081	1	- 095	7	- 346	7	- 064	7	15	1
513		2	max	2	7	358	7	- 014	1	- 061	2	0	2	3	7
514			min	039	1	.065	1	- 095	7	- 346	7	- 004	7	048	1
515		3	max	2	7	275	7	- 016	1	- 061	2	017	7	- 032	1
516			min	04	1	048	1	- 095	7	- 346	7	005	2	- 158	7
517		4	max	2	7	192	7	- 018	2	- 061	2	004	3	- 092	1
518			min	041	1	032	1	- 095	7	- 346	7	0	7	- 507	7
519		5	max	2	7	109	7	- 019	2	- 061	2	- 012	1	- 132	1
520			min	.042	1	015	1	- 095	7	- 346	7	- 055	7	- 748	7
521	M70	1	max	204	7	- 016	1	096	7	348	7	- 006	2	- 131	2
522			min	026	2	- 111	7	014	2	061	1	- 058	7	- 757	7
523		2	max	204	7	- 032	1	096	7	348	7	003	3	- 094	1
524			min	024	2	- 193	7	015	2	061	1	- 002	7	- 514	7
525		3	max	204	7	- 048	1	096	7	348	7	015	7	- 033	1
526			min	021	2	- 276	7	016	2	061	1	003	2	- 162	7
527		4	max	204	7	- 065	1	096	7	348	7	0	1	298	7
528			min	019	2	- 359	7	014	1	061	1	- 005	7	048	2
529		5	max	204	7	- 081	1	096	7	348	7	- 013	2	867	7
530			min	017	2	- 442	7	012	1	061	1	- 064	7	15	1
531	M69	1	max	213	7	499	7	- 012	1	- 043	1	002	2	359	7
532			min	032	2	084	2	- 077	7	- 245	7	- 003	3	062	1
533		2	max	213	7	346	7	- 013	1	- 043	1	094	7	- 036	1
534			min	031	2	059	2	- 077	7	- 245	7	013	2	- 229	7
535		3	max	213	7	194	7	- 013	2	- 043	1	118	7	- 103	1
536			min	03	2	034	2	- 077	7	- 245	7	016	2	- 618	7
537		4	max	213	7	042	7	- 011	2	- 043	1	072	7	- 138	1
538			min	029	2	009	2	- 077	7	- 245	7	01	2	- 807	7
539		5	max	213	7	- 016	1	- 008	2	- 043	1	- 004	2	- 138	2
540			min	028	2	- 111	7	- 077	7	- 245	7	- 044	7	- 798	7
541	M68	1	max	003	1	- 003	1	024	7	039	7	016	7	- 008	1
542			min	- 001	4	- 053	7	002	2	007	1	0	4	- 035	7
543		2	max	001	1	- 007	1	024	7	039	7	0	1	044	7
544			min	0	4	- 061	7	004	2	007	1	- 017	7	0	2
545		3	max	0	1	- 012	1	024	7	039	7	- 006	1	131	7
546			min	0	1	- 069	7	004	1	007	1	- 057	7	014	2
547		4	max	0	2	- 017	1	024	7	039	7	- 015	2	226	7
548			min	- 001	3	- 077	7	005	1	007	1	- 105	7	033	1
549		5	max	001	2	- 022	1	024	7	039	7	- 027	2	329	7
550			min	- 003	3	- 085	7	005	1	007	1	- 161	7	057	1
551	M67	1	max	001	1	026	7	001	7	0	1	- 003	1	- 003	1
552			min	- 003	4	011	2	- 003	1	0	7	- 015	7	- 016	7
553		2	max	0	1	018	7	001	7	0	1	008	7	- 014	1
554			min	- 001	4	007	2	- 001	1	0	7	003	2	- 036	7
555		3	max	0	1	01	7	001	7	0	1	024	7	- 018	2
556			min	0	1	002	2	0	1	0	7	007	1	- 049	7
557		4	max	001	2	002	7	002	5	0	1	032	7	- 017	2
558			min	0	3	- 005	4	0	2	0	7	007	1	- 054	7

TPF-42

Envelope Member Section Forces (Continued)

	Member	Sec		Axial[k]	LC	y Shear[k]	LC	z Shear[k]	LC	Torque[k-ft]	LC	y-y Mome.	LC	z-z Moment[k-ft]	LC
559		5	max	003	2	- 006	7	003	5	0	1	031	7	- 011	1
560			min	- 001	3	- 013	4	001	7	0	7	004	2	- 051	7
561	M66	1	max	082	2	1 725	7	011	1	0	7	0	1	0	1
562			min	- 495	3	235	1	0	2	0	1	0	1	0	1
563		2	max	05	2	862	7	005	1	0	7	021	1	- 452	1
564			min	- 495	3	118	1	0	2	0	1	0	2	-3 314	7
565		3	max	017	2	0	1	0	1	0	7	027	1	- 603	1
566			min	- 495	3	0	1	0	1	0	1	0	2	-4 419	7
567		4	max	- 015	2	- 118	1	0	2	0	7	021	1	- 452	1
568			min	- 495	3	- 862	7	- 005	1	0	1	0	2	-3 314	7
569		5	max	- 047	2	- 235	1	0	2	0	7	0	1	0	1
570			min	- 495	3	-1 725	7	- 011	1	0	1	0	1	0	1
571	M65	1	max	- 008	2	1 725	7	011	1	0	1	0	1	0	1
572			min	- 776	5	235	1	0	2	- 002	7	0	1	0	1
573		2	max	- 04	2	862	7	005	1	0	1	021	1	- 452	1
574			min	- 776	5	118	1	0	2	- 002	7	0	2	-3 314	7
575		3	max	- 072	2	0	1	0	1	0	1	027	1	- 603	1
576			min	- 776	5	0	1	0	1	- 002	7	0	2	-4 419	7
577		4	max	- 105	2	- 118	1	0	2	0	1	021	1	- 452	1
578			min	- 776	5	- 862	7	- 005	1	- 002	7	0	2	-3 314	7
579		5	max	- 137	2	- 235	1	0	2	0	1	0	1	0	1
580			min	- 776	5	-1 725	7	- 011	1	- 002	7	0	1	0	1
581	M64	1	max	06	2	1 725	7	011	1	0	2	0	1	0	1
582			min	- 03	7	235	1	0	2	0	7	0	1	0	1
583		2	max	028	2	862	7	005	1	0	2	021	1	- 452	1
584			min	- 03	7	118	1	0	2	0	7	0	2	-3 314	7
585		3	max	012	1	0	1	0	1	0	2	027	1	- 603	1
586			min	- 03	7	0	1	0	1	0	7	0	2	-4 419	7
587		4	max	012	1	- 118	1	0	2	0	2	021	1	- 452	1
588			min	- 049	6	- 862	7	- 005	1	0	7	0	2	-3 314	7
589		5	max	012	1	- 235	1	0	2	0	2	0	1	0	1
590			min	- 073	6	-1 725	7	- 011	1	0	7	0	1	0	1
591	M63	1	max	065	2	1 725	7	011	1	002	7	0	1	0	1
592			min	- 151	7	235	1	0	2	0	1	0	1	0	1
593		2	max	033	2	862	7	005	1	002	7	021	1	- 452	1
594			min	- 151	7	118	1	0	2	0	1	0	2	-3 314	7
595		3	max	0	2	0	1	0	1	002	7	027	1	- 603	1
596			min	- 151	7	0	1	0	1	0	1	0	2	-4.419	7
597		4	max	- 032	2	- 118	1	0	2	002	7	021	1	- 452	1
598			min	- 151	7	- 862	7	- 005	1	0	1	0	2	-3 314	7
599		5	max	- 042	1	- 235	1	0	2	002	7	0	1	0	1
600			min	- 155	6	-1 725	7	- 011	1	0	1	0	1	0	1
601	M62	1	max	- 408	2	51	7	0	2	- 002	1	0	1	0	1
602			min	-3 041	7	072	1	- 004	3	- 011	7	0	1	0	1
603		2	max	- 398	2	255	7	0	2	- 002	1	0	2	- 041	1
604			min	-3 041	7	036	1	- 002	3	- 011	7	- 002	3	- 287	7
605		3	max	- 388	2	0	1	0	1	- 002	1	0	2	- 054	1
606			min	-3 041	7	0	1	0	1	-.011	7	- 003	3	- 383	7
607		4	max	- 378	2	- 036	1	002	1	- 002	1	0	2	- 041	1
608			min	-3 041	7	- 255	7	0	2	- 011	7	- 002	3	- 287	7
609		5	max	- 368	2	- 072	1	004	1	- 002	1	0	1	0	1
610			min	-3 041	7	- 51	7	0	2	- 011	7	0	1	0	1
611	M61	1	max	6 111	7	013	4	003	1	0	1	0	1	0	1
612			min	1 236	1	006	1	0	2	0	1	0	1	0	1
613		2	max	6 117	7	006	4	001	1	0	1	008	3	- 002	1
614			min	1 239	1	003	1	0	2	0	1	005	2	- 007	4
615		3	max	6 122	7	0	1	0	1	0	1	01	3	- 003	1

TPF-43

Envelope Member Section Forces (Continued)

	Member	Sec		Axial[k]	LC	y Shear[k]	LC	z Shear[k]	LC	Torque[k-ft]	LC	y-y Mome	LC	z-z Moment[k-ft]	LC
616			min	1 242	1	0	1	0	1	0	1	006	2	- 01	4
617		4	max	6 127	7	- 003	1	0	2	0	1	008	3	- 002	1
618			min	1 246	1	- 006	4	- 001	3	0	1	005	2	- 007	4
619		5	max	6 133	7	- 006	1	0	2	0	1	0	1	0	1
620			min	1 249	1	- 013	4	- 003	3	0	1	0	1	0	1
621	M60	1	max	6 025	7	013	4	0	2	0	1	0	1	0	1
622			min	1 191	1	006	1	- 003	1	0	1	0	1	0	1
623		2	max	6 02	7	006	4	0	2	0	1	007	4	- 005	2
624			min	1 188	1	003	1	- 001	1	0	1	002	1	- 008	3
625		3	max	6 015	7	0	1	0	1	0	1	01	4	- 006	2
626			min	1 184	1	0	1	0	1	0	1	003	1	- 01	3
627		4	max	6 009	7	- 003	1	001	3	0	1	007	4	- 005	2
628			min	1 181	1	- 006	4	0	2	0	1	002	1	- 008	3
629		5	max	6 004	7	- 006	1	003	3	0	1	0	1	0	1
630			min	1 178	1	- 013	4	0	2	0	1	0	1	0	1
631	M59	1	max	4 404	7	011	5	003	3	0	1	0	1	0	1
632			min	1 004	1	005	2	0	2	0	1	0	1	0	1
633		2	max	4 398	7	005	5	001	3	0	1	008	3	- 002	1
634			min	1 001	1	002	2	0	2	0	1	003	2	- 006	7
635		3	max	4 393	7	0	1	0	1	0	1	01	3	- 003	1
636			min	998	1	0	1	0	1	0	1	003	2	- 008	7
637		4	max	4 388	7	- 002	2	0	2	0	1	008	3	- 002	1
638			min	994	2	- 005	3	- 001	1	0	1	003	2	- 006	7
639		5	max	4 382	7	- 005	2	0	2	0	1	0	1	0	1
640			min	99	2	- 011	3	- 003	1	0	1	0	1	0	1
641	M58	1	max	4 379	7	011	7	003	3	0	1	0	1	0	1
642			min	997	1	005	2	0	2	0	1	0	1	0	1
643		2	max	4 374	7	005	7	001	3	0	1	008	3	- 002	1
644			min	993	1	002	2	0	2	0	1	003	2	- 006	7
645		3	max	4 369	7	0	1	0	1	0	1	01	3	- 003	1
646			min	99	1	0	1	0	1	0	1	003	2	- 008	7
647		4	max	4 363	7	- 002	2	0	2	0	1	008	3	- 002	1
648			min	986	2	- 005	3	- 001	1	0	1	003	2	- 006	7
649		5	max	4 358	7	- 005	2	0	2	0	1	0	1	0	1
650			min	982	2	- 011	3	- 003	1	0	1	0	1	0	1
651	M57	1	max	- 838	1	51	7	0	2	006	7	0	1	0	1
652			min	-4 289	7	072	2	- 004	3	001	2	0	1	0	1
653		2	max	- 838	1	255	7	0	2	006	7	0	2	- 041	2
654			min	-4 289	7	036	2	- 002	3	001	2	- 002	3	- 287	7
655		3	max	- 838	1	0	1	0	1	006	7	0	2	- 054	2
656			min	-4 289	7	0	1	0	1	.001	2	- 003	3	- 383	7
657		4	max	- 838	1	- 036	1	002	1	006	7	0	2	- 041	2
658			min	-4 289	7	- 255	7	0	2	001	2	- 002	3	- 287	7
659		5	max	- 838	1	- 072	1	004	1	006	7	0	1	0	1
660			min	-4 289	7	- 51	7	0	2	001	2	0	1	0	1
661	M56	1	max	- 539	2	51	7	004	3	111	7	0	1	0	1
662			min	-3 048	7	072	1	0	2	02	1	0	1	0	1
663		2	max	- 549	2	255	7	002	3	111	7	002	3	- 041	1
664			min	-3 048	7	036	1	0	2	02	1	0	2	- 287	7
665		3	max	- 559	2	0	1	0	1	111	7	003	3	- 054	1
666			min	-3.048	7	0	1	0	1	02	1	0	2	- 383	7
667		4	max	- 569	2	- 036	1	0	2	111	7	002	3	- 041	1
668			min	-3 048	7	- 255	7	- 002	1	02	1	0	2	- 287	7
669		5	max	- 579	2	- 072	1	0	2	111	7	0	1	0	1
670			min	-3 048	7	- 51	7	- 004	1	02	1	0	1	0	1
671	M55	1	max	- 935	1	51	7	004	3	- 012	2	0	1	0	1
672			min	-4 391	7	072	1	0	2	- 072	7	0	1	0	1

TPF-44

Envelope Member Section Forces (Continued)

	Member	Sec		Axial[k]	LC	y Shear[k]	LC	z Shear[k]	LC	Torque[k-ft]	LC	y-y Mome	LC	z-z Moment[k-ft]	LC
673		2	max	- 935	1	255	7	002	3	- 012	2	002	3	- 041	1
674			min	-4 391	7	036	1	0	2	- 072	7	0	2	- 287	7
675		3	max	- 935	1	0	1	0	1	- 012	2	003	3	- 054	1
676			min	-4 391	7	0	1	0	1	- 072	7	0	2	- 383	7
677		4	max	- 935	1	- 036	1	0	2	- 012	2	002	3	- 041	1
678			min	-4 391	7	- 255	7	- 002	1	- 072	7	0	2	- 287	7
679		5	max	- 935	1	- 072	1	0	2	- 012	2	0	1	0	1
680			min	-4 391	7	- 51	7	- 004	1	- 072	7	0	1	0	1
681	M54	1	max	118	3	2 212	7	0	1	0	7	0	1	0	1
682			min	- 006	2	536	2	- 106	6	0	2	0	1	0	1
683		2	max	03	5	1 965	7	0	1	0	7	- 006	1	-2 772	2
684			min	-.006	2	388	2	- 081	6	0	2	- 56	6	-12 532	7
685		3	max	02	7	008	3	04	2	0	7	- 049	1	-3 912	2
686			min	- 087	1	- 006	7	- 022	5	0	2	- 737	6	-18 124	7
687		4	max	097	1	- 399	1	134	6	002	7	- 062	1	-2 838	1
688			min	0	2	-2 012	7	012	1	0	2	- 371	7	-12 809	7
689		5	max	0	1	- 547	1	159	6	002	7	734	4	0	1
690			min	0	1	-2 258	7	012	1	0	2	01	1	0	1
691	M53	1	max	86	3	3 488	7	- 002	1	001	7	0	1	0	1
692			min	- 088	6	536	2	- 353	6	0	1	0	1	0	1
693		2	max	151	3	004	3	012	2	0	7	- 014	1	- 843	1
694			min	003	2	- 067	7	- 036	7	0	1	- 571	6	-5 46	7
695		3	max	111	3	- 019	1	018	2	0	7	- 045	1	- 822	1
696			min	003	2	- 103	7	- 036	7	0	1	- 605	6	-5 259	7
697		4	max	072	5	- 041	1	025	2	0	7	- 076	1	- 751	1
698			min	.003	2	- 139	7	-.036	7	0	1	- 627	6	-4 972	7
699		5	max	029	7	- 533	1	477	6	0	7	0	1	0	1
700			min	003	2	-3 624	7	067	1	0	1	0	1	0	1
701	M52	1	max	113	1	3 159	7	- 001	1	- 011	1	266	6	1 668	7
702			min	009	7	656	1	- 131	4	- 054	7	046	1	334	1
703		2	max	111	2	2 913	7	- 001	1	- 011	1	039	1	-3 158	1
704			min	009	7	508	1	- 1	6	- 054	7	- 422	4	-16 55	7
705		3	max	111	2	942	7	005	2	- 011	1	- 102	1	-5 018	1
706			min	- 092	3	125	1	- 192	7	- 054	7	-1 117	6	-27 826	7
707		4	max	097	1	- 53	1	112	4	- 011	1	- 029	2	-3 623	1
708			min	0	2	-3 154	7	011	1	- 054	7	- 24	7	-19 66	7
709		5	max	0	1	- 678	1	146	4	- 011	1	726	2	0	1
710			min	0	1	-3 4	7	011	1	- 054	7	- 015	5	0	1
711	M51	1	max	- 047	1	- 073	1	004	7	- 005	2	023	3	- 174	1
712			min	- 395	7	- 607	7	- 011	4	- 015	5	- 007	7	-1 446	7
713		2	max	- 047	1	- 086	1	004	7	- 005	2	02	3	- 139	1
714			min	- 395	7	- 717	7	- 011	4	-.015	5	- 005	7	-1 156	7
715		3	max	- 047	1	- 099	1	004	7	- 005	2	015	3	- 098	1
716			min	- 395	7	- 826	7	- 013	3	- 015	5	- 003	7	- 818	7
717		4	max	- 047	1	- 112	1	004	7	- 005	2	008	3	- 052	1
718			min	- 395	7	- 935	7	- 017	3	- 015	5	- 002	7	- 433	7
719		5	max	- 047	1	- 125	1	004	7	- 005	2	0	1	0	1
720			min	- 395	7	-1 045	7	- 021	3	- 015	5	0	1	0	1
721	M50	1	max	0	1	884	7	045	1	004	2	081	4	0	1
722			min	0	1	097	2	- 011	4	- 013	7	- 087	1	0	1
723		2	max	- 019	1	571	7	032	1	004	2	065	4	- 114	2
724			min	- 156	7	065	2	- 011	4	- 013	7	- 038	5	-1 017	7
725		3	max	- 038	1	259	7	02	1	004	2	05	4	- 183	2
726			min	- 313	7	031	1	- 011	4	- 013	7	- 012	7	-1 596	7
727		4	max	- 056	1	002	2	008	5	004	2	035	4	- 207	2
728			min	- 469	7	- 054	7	- 011	4	- 013	7	- 006	7	-1 739	7
729		5	max	- 075	1	- 03	2	004	7	004	2	025	3	- 174	1

TPF-45

Envelope Member Section Forces (Continued)

	Member	Sec		Axial[k]	LC	y Shear[k]	LC	z Shear[k]	LC	Torque[k-ft]	LC	y-y Mome	LC	z-z Moment[k-ft]	LC
730			min	- 625	7	- 366	7	- 011	4	- 013	7	0	7	-1 446	7
731	M49	1	max	- 047	1	607	7	006	2	007	7	051	7	1 446	7
732			min	- 395	7	073	1	- 029	7	- 007	1	- 015	1	174	1
733		2	max	- 047	1	717	7	006	2	007	7	038	7	1 156	7
734			min	- 395	7	086	1	- 029	7	- 007	1	- 014	1	139	1
735		3	max	- 047	1	826	7	008	1	007	7	025	7	818	7
736			min	- 395	7	099	1	- 029	7	- 007	1	- 011	1	098	1
737		4	max	- 047	1	935	7	012	1	007	7	013	7	433	7
738			min	- 395	7	112	1	- 029	7	- 007	1	- 006	1	052	1
739		5	max	- 047	1	1 045	7	016	1	007	7	0	1	0	1
740			min	- 395	7	125	1	- 029	7	- 007	1	0	1	0	1
741	M48	1	max	0	1	- 097	2	006	2	001	2	239	5	0	1
742			min	0	1	- 884	7	- 058	5	- 016	7	- 044	2	0	1
743		2	max	- 019	1	- 065	2	006	2	001	2	17	7	1 017	7
744			min	- 156	7	- 571	7	- 048	5	- 016	7	- 036	2	114	2
745		3	max	- 038	1	- 031	1	006	2	001	2	13	7	1 596	7
746			min	- 313	7	- 259	7	- 039	5	- 016	7	- 028	2	183	2
747		4	max	- 056	1	054	7	006	2	001	2	089	7	1 739	7
748			min	- 469	7	- 002	2	- 029	5	- 016	7	- 019	2	207	2
749		5	max	- 075	1	366	7	006	2	001	2	049	7	1 446	7
750			min	- 625	7	03	2	- 029	7	- 016	7	- 016	1	174	1
751	M47	1	max	- 08	2	1 188	7	039	3	003	7	0	1	0	1
752			min	-1 375	7	143	1	001	2	0	1	0	1	0	1
753		2	max	- 06	2	594	7	014	5	003	7	073	3	- 293	1
754			min	-1 031	7	071	1	001	2	0	1	003	2	-2 444	7
755		3	max	- 04	2	0	1	006	7	003	7	079	5	- 391	1
756			min	- 688	7	0	1	- 011	1	0	1	007	2	-3 259	7
757		4	max	- 02	2	- 071	1	006	7	003	7	049	7	- 293	1
758			min	- 344	7	- 594	7	-.035	1	0	1	01	2	-2.444	7
759		5	max	0	1	- 143	1	006	7	003	7	066	7	0	1
760			min	0	1	-1 188	7	- 06	1	0	1	- 119	1	0	1
761	M46	1	max	- 08	2	- 143	1	066	7	- 002	2	0	1	0	1
762			min	-1 375	7	-1 188	7	- 026	1	- 008	7	0	1	0	1
763		2	max	- 06	2	- 071	1	066	7	- 002	2	182	7	2 444	7
764			min	-1 031	7	- 594	7	- 001	1	- 008	7	-.037	1	293	1
765		3	max	- 04	2	0	1	066	7	- 002	2	364	7	3 259	7
766			min	- 688	7	0	1	015	2	- 008	7	- 007	1	391	1
767		4	max	- 02	2	594	7	082	5	- 002	2	546	7	2 444	7
768			min	- 344	7	071	1	015	2	- 008	7	09	1	293	1
769		5	max	0	1	1 188	7	1	5	- 002	2	728	7	0	1
770			min	0	1	143	1	015	2	- 008	7	162	2	0	1
771	M45	1	max	- 368	1	026	4	0	2	0	1	0	1	0	1
772			min	-1 684	7	016	1	- 005	1	- 004	7	0	1	0	1
773		2	max	- 368	1	013	4	0	2	0	1	0	2	- 013	1
774			min	-1 684	7	008	1	- 002	1	- 004	7	- 004	1	- 022	4
775		3	max	- 368	1	0	1	0	1	0	1	0	2	- 017	1
776			min	-1 684	7	0	1	0	1	- 004	7	- 005	1	- 029	4
777		4	max	- 368	1	- 008	2	002	1	0	1	0	2	- 013	1
778			min	-1 684	7	- 013	7	0	2	- 004	7	- 004	1	- 022	4
779		5	max	- 368	1	- 016	2	005	1	0	1	0	1	0	1
780			min	-1 684	7	- 026	7	0	2	- 004	7	0	1	0	1
781	M44	1	max	- 543	2	026	7	005	3	011	7	0	1	0	1
782			min	-5 057	7	016	2	0	2	001	2	0	1	0	1
783		2	max	- 556	2	013	7	002	3	011	7	004	3	- 013	2
784			min	-5 057	7	008	2	0	2	001	2	0	2	- 022	7
785		3	max	- 568	2	0	1	0	1	011	7	005	3	- 017	2
786			min	-5 057	7	0	1	0	1	001	2	0	2	- 029	7

JPF-46

Envelope Member Section Forces (Continued)

	Member	Sec		Axial[k]	LC	y Shear[k]	LC	z Shear[k]	LC	Torque[k-ft]	LC	y-y Mome	LC	z-z Moment[k-ft]	LC
787		4	max	- 581	2	- 008	1	0	2	011	7	004	3	- 013	2
788			min	-5 057	7	- 013	4	- 002	1	001	2	0	2	- 022	7
789		5	max	- 593	2	- 016	1	0	2	011	7	0	1	0	1
790			min	-5 057	7	- 026	4	- 005	1	001	2	0	1	0	1
791	M43	1	max	023	7	028	4	0	2	008	7	0	1	0	1
792			min	- 06	2	016	1	- 005	1	001	2	0	1	0	1
793		2	max	022	7	014	4	0	2	008	7	0	2	- 013	1
794			min	- 048	2	008	1	- 002	1	001	2	- 004	1	- 024	4
795		3	max	021	7	0	1	0	1	008	7	0	2	- 018	1
796			min	- 036	2	0	1	0	1	001	2	- 005	1	- 032	4
797		4	max	019	7	- 008	1	002	1	008	7	0	2	- 013	1
798			min	- 024	2	- 014	4	0	2	001	2	- 004	1	- 024	4
799		5	max	018	7	- 016	1	005	1	008	7	0	1	0	1
800			min	- 012	2	- 028	4	0	2	001	2	0	1	0	1
801	M42	1	max	08	2	026	3	005	1	- 001	2	0	1	0	1
802			min	-1 029	7	013	2	0	2	- 009	7	0	1	0	1
803		2	max	066	2	013	3	002	1	- 001	2	004	1	- 011	2
804			min	-1 03	7	007	2	0	2	- 009	7	0	2	- 022	3
805		3	max	053	2	0	1	0	1	- 001	2	005	1	- 015	2
806			min	-1 031	7	0	1	0	1	- 009	7	0	2	- 029	3
807		4	max	04	2	- 007	2	0	2	- 001	2	004	1	- 011	2
808			min	-1 033	7	- 013	7	- 002	1	- 009	7	0	2	- 022	3
809		5	max	026	2	- 013	2	0	2	- 001	2	0	1	0	1
810			min	-1 034	7	- 026	7	- 005	1	- 009	7	0	1	0	1
811	M41	1	max	- 169	1	935	7	0	1	0	7	0	2	- 003	2
812			min	-1 881	7	14	1	- 008	2	0	2	0	7	- 018	7
813		2	max	- 198	1	468	7	0	1	0	7	0	1	- 207	1
814			min	-1 908	7	07	1	- 004	2	0	2	- 012	4	-1 38	7
815		3	max	- 226	1	0	2	0	1	0	7	0	1	- 275	1
816			min	-1 935	7	0	7	0	1	0	2	- 016	4	-1 833	7
817		4	max	- 255	1	- 07	1	004	4	0	7	0	1	- 207	1
818			min	-1 963	7	- 468	7	0	1	0	2	- 012	4	-1 378	7
819		5	max	- 283	1	- 14	1	008	4	0	7	0	2	- 002	2
820			min	-1 99	7	- 936	7	0	1	0	2	0	7	- 015	7
821	M40	1	max	- 29	1	1 219	7	- 002	1	0	2	0	7	0	7
822			min	-2 126	7	245	1	- 011	6	0	7	0	2	0	2
823		2	max	- 329	1	602	7	004	2	0	2	- 001	2	- 782	1
824			min	-2 126	7	127	1	- 011	7	0	7	- 046	7	-3 83	7
825		3	max	- 372	1	- 005	1	009	7	0	2	- 002	1	-1 007	1
826			min	-2 126	7	- 038	7	002	1	0	7	- 012	6	-4 961	7
827		4	max	749	7	- 117	1	- 001	1	0	4	024	6	- 741	1
828			min	176	2	- 54	7	- 009	6	0	7	.005	1	-3 568	7
829		5	max	749	7	- 235	1	002	2	0	4	0	1	0	4
830			min	171	1	-1 156	7	- 006	7	0	7	0	1	0	7
831	M39	1	max	- 484	1	3 967	7	0	2	0	7	0	1	0	7
832			min	-4 923	7	574	2	- 112	7	0	1	0	7	0	1
833		2	max	- 531	1	3 303	7	018	2	0	7	038	2	-2 109	2
834			min	-4 923	7	428	2	- 112	7	0	1	- 473	7	-15 298	7
835		3	max	- 608	1	794	7	319	7	0	7	1 354	7	-2 977	2
836			min	-4 856	7	087	2	019	1	0	1	083	2	-21 839	7
837		4	max	1 183	7	- 394	2	343	7	0	2	- 142	2	-1 966	2
838			min	161	2	-2 854	7	025	2	0	7	-1 445	7	-13 407	7
839		5	max	1 183	7	- 54	2	343	7	0	2	0	1	0	7
840			min	149	1	-3 518	7	04	1	0	7	0	1	0	2
841	M38	1	max	065	6	668	7	0	7	0	1	0	1	0	1
842			min	- 029	1	164	2	- 012	2	- 002	7	0	1	0	1
843		2	max	069	6	334	7	0	7	0	1	0	7	- 242	2

TPF-47

Envelope Member Section Forces (Continued)

	Member	Sec		Axial[k]	LC	y Shear[k]	LC	z Shear[k]	LC	Torque[k-ft]	LC	y-y Mome .	LC	z-z Moment[k-ft]	LC
844			min	- 035	1	082	2	- 006	2	- 002	7	- 018	2	- 988	7
845		3	max	074	6	0	1	0	1	0	1	0	7	- 323	2
846			min	- 042	1	0	1	0	1	- 002	7	- 025	2	-1 318	7
847		4	max	078	6	- 082	1	006	4	0	1	0	7	- 242	2
848			min	- 048	1	- 334	7	0	7	- 002	7	- 018	2	- 988	7
849		5	max	083	6	- 164	1	012	4	0	1	0	1	0	1
850			min	- 054	1	- 668	7	0	7	- 002	7	0	1	0	1
851	M37	1	max	074	5	668	7	012	4	0	7	0	1	0	1
852			min	.03	2	164	1	- 012	3	0	1	0	1	0	1
853		2	max	078	5	334	7	006	4	0	7	018	4	- 242	1
854			min	036	2	082	1	-.006	3	0	1	- 018	3	- 989	7
855		3	max	083	5	0	1	0	1	0	7	025	4	- 323	1
856			min	042	2	0	1	0	1	0	1	- 024	3	-1 318	7
857		4	max	087	5	- 082	1	006	1	0	7	018	4	- 242	1
858			min	048	2	- 334	7	- 006	2	0	1	- 018	3	- 989	7
859		5	max	092	5	- 164	1	012	1	0	7	0	1	0	1
860			min	052	7	- 668	7	- 012	2	0	1	0	1	0	1
861	M36	1	max	- 225	1	027	3	004	3	002	7	0	1	0	1
862			min	-1 213	6	016	1	- 003	2	0	1	0	1	0	1
863		2	max	- 226	1	014	3	002	3	002	7	039	3	- 015	1
864			min	-1 215	6	008	1	- 001	2	0	1	017	2	- 037	4
865		3	max	- 228	1	0	1	0	1	002	7	051	3	- 02	1
866			min	-1 216	6	0	1	0	1	0	1	022	2	- 05	4
867		4	max	- 229	1	- 008	1	001	4	002	7	039	3	- 015	1
868			min	-1.217	6	- 014	5	- 002	1	0	1	017	2	- 037	4
869		5	max	- 231	1	- 016	1	003	4	002	7	0	1	0	1
870			min	-1 219	6	- 027	5	- 004	1	0	1	0	1	0	1
871	M35	1	max	228	5	028	7	0	7	0	1	0	1	0	1
872			min	022	2	017	1	- 004	1	0	7	0	1	0	1
873		2	max	226	5	014	7	0	7	0	1	037	7	- 026	2
874			min	024	2	008	1	- 002	1	0	7	017	1	-.042	3
875		3	max	225	5	0	1	0	1	0	1	049	7	- 035	2
876			min	026	2	0	1	0	1	0	7	023	1	- 056	3
877		4	max	224	5	- 008	1	002	1	0	1	037	7	- 026	2
878			min	028	2	- 014	3	0	7	0	7	017	1	- 042	3
879		5	max	223	5	- 017	1	004	1	0	1	0	1	0	1
880			min	03	2	- 028	3	0	7	0	7	0	1	0	1
881	M34	1	max	1 325	6	027	3	003	2	0	7	0	1	0	1
882			min	019	1	016	1	- 004	1	0	1	0	1	0	1
883		2	max	1 326	6	014	3	001	2	0	7	037	4	- 017	2
884			min	02	1	008	1	- 002	1	0	1	015	1	- 039	3
885		3	max	1 328	6	0	1	0	1	0	7	05	4	- 022	2
886			min	022	1	0	1	0	1	0	1	02	1	- 051	3
887		4	max	1 329	6	- 008	1	002	3	0	7	037	4	- 017	2
888			min	023	1	- 014	7	- 001	4	0	1	015	1	- 039	3
889		5	max	1 331	6	- 016	1	004	3	0	7	0	1	0	1
890			min	025	1	- 027	7	- 003	4	0	1	0	1	0	1
891	M33	1	max	059	1	028	3	003	4	0	1	0	1	0	1
892			min	- 053	7	017	1	- 004	1	0	1	0	1	0	1
893		2	max	06	1	014	3	002	4	0	1	041	4	- 018	2
894			min	- 053	7	.008	1	- 002	1	0	1	017	1	- 042	3
895		3	max	062	1	0	1	0	1	0	1	055	4	- 024	2
896			min	- 053	7	0	1	0	1	0	1	023	1	- 056	3
897		4	max	063	1	- 008	1	002	3	0	1	041	4	- 018	2
898			min	- 053	7	- 014	7	- 002	2	0	1	017	1	- 042	3
899		5	max	065	1	- 017	1	004	3	0	1	0	1	0	1
900			min	- 053	7	- 028	7	- 003	2	0	1	0	1	0	1

TPF-48

Envelope Member Section Forces (Continued)

	Member	Sec		Axial[k]	LC	y Shear[k]	LC	z Shear[k]	LC	Torque[k-ft]	LC	y-y Mome	LC	z-z Moment[k-ft]	LC
901	M32	1	max	026	7	028	5	0	7	0	1	0	1	0	1
902			min	- 093	1	017	1	- 004	1	0	1	0	1	0	1
903		2	max	026	7	014	5	0	7	0	1	037	7	- 026	2
904			min	- 094	1	008	1	- 002	1	0	1	017	1	- 042	3
905		3	max	026	7	0	1	0	1	0	1	049	7	- 035	2
906			min	- 096	1	0	1	0	1	0	1	023	1	- 056	3
907		4	max	026	7	- 008	1	002	3	0	1	037	7	- 026	2
908			min	- 098	1	- 014	3	0	7	0	1	017	1	- 042	3
909		5	max	026	7	- 017	1	004	3	0	1	0	1	0	1
910			min	- 099	1	- 028	3	0	7	0	1	0	1	0	1
911	M31	1	max	116	1	023	5	003	2	0	1	0	1	0	1
912			min	- 327	7	014	1	0	7	0	7	0	1	0	1
913		2	max	118	1	011	5	002	2	0	1	027	4	- 011	2
914			min	- 327	7	007	1	0	7	0	7	017	1	- 024	7
915		3	max	119	1	0	1	0	1	0	1	036	4	- 014	2
916			min	- 327	7	0	1	0	1	0	7	022	1	- 031	7
917		4	max	121	1	- 007	1	0	7	0	1	027	4	- 011	2
918			min	- 327	7	- 011	3	- 002	2	0	7	017	1	- 024	7
919		5	max	123	1	- 014	1	0	7	0	1	0	1	0	1
920			min	- 327	7	- 023	3	- 003	2	0	7	0	1	0	1
921	M30	1	max	- 079	2	023	3	003	4	0	7	0	1	0	1
922			min	- 451	5	014	1	- 002	3	0	3	0	1	0	1
923		2	max	- 077	2	011	3	002	4	0	7	028	4	- 011	2
924			min	- 449	5	007	1	- 001	3	0	3	012	1	- 026	3
925		3	max	- 076	2	0	1	0	1	0	7	037	4	- 014	2
926			min	- 448	5	0	1	0	1	0	3	016	1	- 035	3
927		4	max	- 075	2	- 007	1	001	1	0	7	028	4	- 011	2
928			min	- 447	5	- 011	3	- 002	2	0	3	012	1	- 026	3
929		5	max	- 074	2	- 014	1	002	1	0	7	0	1	0	1
930			min	- 446	5	- 023	3	- 003	2	0	3	0	1	0	1
931	M29	1	max	129	1	023	3	003	4	0	7	0	1	0	1
932			min	- 106	7	014	1	0	7	0	1	0	1	0	1
933		2	max	131	1	011	3	002	4	0	7	027	4	- 011	2
934			min	- 106	7	007	1	0	7	0	1	017	1	- 024	7
935		3	max	133	1	0	1	0	1	0	7	037	4	- 014	2
936			min	-.106	7	0	1	0	1	0	1	022	1	- 032	7
937		4	max	134	1	- 007	1	0	7	0	7	027	4	- 011	2
938			min	- 106	7	- 011	3	- 002	2	0	1	017	1	-.024	7
939		5	max	136	1	- 014	1	0	7	0	7	0	1	0	1
940			min	- 106	7	- 023	3	- 003	2	0	1	0	1	0	1
941	M28	1	max	- 035	2	022	3	003	2	0	2	0	1	0	1
942			min	- 233	5	013	1	- 018	1	0	7	0	1	0	1
943		2	max	- 033	2	011	3	002	2	0	2	026	4	- 01	2
944			min	- 224	5	007	1	- 009	1	0	7	- 005	1	- 041	3
945		3	max	- 032	2	0	1	0	1	0	2	035	4	- 014	2
946			min	- 214	5	0	1	0	1	0	7	-.006	1	- 055	3
947		4	max	- 031	2	- 007	1	009	1	0	2	026	4	- 01	2
948			min	- 205	5	- 011	3	- 002	2	0	7	- 005	1	- 041	3
949		5	max	- 03	2	- 013	1	018	1	0	2	0	1	0	1
950			min	-.195	5	- 022	3	- 003	2	0	7	0	1	0	1
951	M27	1	max	- 192	1	- 248	2	143	3	0	1	- 005	2	6 544	7
952			min	-1 602	7	-2 632	7	0	2	0	1	- 614	3	781	1
953		2	max	- 087	1	- 107	2	083	3	0	1	149	1	19 424	7
954			min	- 727	7	-1 195	7	0	2	0	1	- 008	6	2 114	2
955		3	max	148	7	243	7	023	3	0	1	506	1	22 626	7
956			min	- 121	2	029	1	0	2	0	1	- 005	6	2 359	2
957		4	max	1 023	7	1 681	7	0	6	0	1	456	1	16 151	7

TPF-49

Envelope Member Section Forces (Continued)

	Member	Sec		Axial[k]	LC	y Shear[k]	LC	z Shear[k]	LC	Torque[k-ft]	LC	y-y Mome	LC	z-z Moment[k-ft]	LC
958			min	036	2	175	2	- 038	1	0	1	- 003	6	1 655	2
959		5	max	1 898	7	3 118	7	0	6	0	1	0	1	0	1
960			min	193	2	- 316	2	- 098	1	0	1	0	1	0	1
961	M26	1	max	0	1	- 43	1	161	3	319	3	- 004	2	- 017	2
962			min	- 259	2	-3 581	7	0	2	002	2	- 829	3	- 119	7
963		2	max	0	1	- 415	1	157	3	319	3	- 004	2	1 641	7
964			min	- 255	2	-3 456	7	0	2	002	2	- 749	3	192	1
965		3	max	0	1	- 4	1	152	3	319	3	- 004	2	3 338	7
966			min	- 25	2	-3 331	7	0	2	002	2	- 672	3	395	1
967		4	max	0	1	- 385	1	148	3	319	3	- 004	2	4 972	7
968			min	- 246	2	-3 206	7	0	2	002	2	- 597	3	592	1
969		5	max	0	1	- 37	1	143	3	319	3	- 004	2	6 544	7
970			min	- 241	2	-3 081	7	0	2	002	2	- 524	3	781	1
971	M25	1	max	101	2	683	7	016	1	0	3	0	1	0	1
972			min	- 014	7	128	1	0	2	0	7	0	1	0	1
973		2	max	079	2	341	7	008	1	0	3	023	1	- 181	1
974			min	- 014	7	064	1	0	2	0	7	0	2	- 96	7
975		3	max	058	2	0	1	0	1	0	3	031	1	- 241	1
976			min	- 014	7	0	1	0	1	0	7	0	2	-1 28	7
977		4	max	036	2	- 064	1	0	2	0	3	023	1	- 181	1
978			min	- 014	7	-.341	7	- 008	1	0	7	0	2	- 96	7
979		5	max	015	2	- 128	1	0	2	0	3	0	1	0	1
980			min	- 014	7	- 683	7	- 016	1	0	7	0	1	0	1
981	M24	1	max	0	1	3 577	7	002	6	283	1	764	1	002	7
982			min	- 259	2	429	1	- 159	1	- 024	6	- 043	6	0	2
983		2	max	0	1	3 452	7	002	6	283	1	686	1	- 211	1
984			min	- 255	2	414	1	-.154	1	- 024	6	- 042	6	-1.755	7
985		3	max	0	1	3 327	7	002	6	283	1	61	1	- 414	1
986			min	- 25	2	399	1	- 15	1	- 024	6	- 041	6	-3 45	7
987		4	max	0	1	3 202	7	002	6	283	1	536	1	- 61	1
988			min	- 246	2	384	1	- 145	1	- 024	6	- 04	6	-5 082	7
989		5	max	0	1	3 077	7	002	6	283	1	465	1	- 798	1
990			min	- 241	2	.369	1	- 141	1	- 024	6	- 04	6	-6 652	7
991	M23	1	max	- 192	1	2 628	7	002	6	0	1	544	1	- 798	1
992			min	-1 6	7	248	2	- 141	1	0	1	- 046	6	-6 652	7
993		2	max	- 087	1	1 191	7	002	6	0	1	- 02	7	-2 126	2
994			min	- 725	7	107	2	- 081	1	0	1	- 203	3	-19 504	7
995		3	max	15	7	- 03	1	002	6	0	1	- 013	7	-2 367	2
996			min	- 12	2	- 247	7	- 02	1	0	1	- 542	3	-22.68	7
997		4	max	1 025	7	- 176	2	04	3	0	1	- 007	7	-1 659	2
998			min	036	2	-1 685	7	001	7	0	1	- 474	3	-16 178	7
999		5	max	1 9	7	- 317	2	101	3	0	1	0	1	0	1
1000			min	193	2	-3 122	7	001	7	0	1	0	1	0	1
1001	M22	1	max	1 401	7	023	4	004	3	0	1	- 008	7	018	4
1002			min	323	1	012	1	0	7	0	1	- 018	4	008	7
1003		2	max	1 409	7	013	4	002	3	0	1	007	7	004	1
1004			min	328	1	007	1	0	7	0	1	0	2	- 007	7
1005		3	max	1 417	7	004	4	0	3	0	1	014	5	0	1
1006			min	332	2	002	7	0	7	0	1	007	2	- 013	6
1007		4	max	1 424	7	- 002	1	0	4	0	1	012	5	- 002	1
1008			min	335	2	- 006	6	- 002	1	0	1	007	2	- 012	6
1009		5	max	1 432	7	- 007	1	0	4	0	1	0	1	0	1
1010			min	338	2	- 015	6	- 004	1	0	1	0	1	0	1
1011	M21	1	max	4 268	7	035	7	026	3	0	1	003	2	074	6
1012			min	749	2	013	1	- 004	2	0	1	- 094	7	016	1
1013		2	max	4 276	7	027	7	013	3	0	1	019	1	051	5
1014			min	752	2	008	1	- 004	2	0	1	- 058	7	009	4

TPF-50

Envelope Member Section Forces (Continued)

	Member	Sec		Axial[k]	LC	y Shear[k]	LC	z Shear[k]	LC	Torque[k-ft]	LC	y-y Mome	LC	z-z Moment[k-ft]	LC
1015		3	max	4 283	7	019	7	002	7	0	1	033	3	036	5
1016			min	756	2	003	2	- 004	2	0	1	- 03	7	- 004	4
1017		4	max	4 291	7	011	7	002	7	0	1	028	3	019	5
1018			min	759	2	- 005	4	- 013	1	0	1	- 011	7	- 007	4
1019		5	max	4 298	7	003	7	002	7	0	1	0	1	0	1
1020			min	762	2	- 014	4	- 026	1	0	1	0	1	0	1
1021	M20	1	max	8 256	7	019	4	004	3	0	1	0	1	0	1
1022			min	952	1	01	1	0	2	0	1	0	1	0	1
1023		2	max	8 263	7	009	4	002	3	0	1	016	3	- 004	1
1024			min	957	1	005	1	0	2	0	1	01	2	- 015	4
1025		3	max	8 271	7	0	1	0	1	0	1	022	3	- 006	1
1026			min	962	1	0	1	0	1	0	1	013	2	-.02	4
1027		4	max	8 279	7	- 005	1	0	2	0	1	016	3	- 004	1
1028			min	966	1	- 009	4	- 002	1	0	1	01	2	- 015	4
1029		5	max	8 286	7	- 01	1	0	2	0	1	0	1	0	1
1030			min	971	1	- 019	4	- 004	1	0	1	0	1	0	1
1031	M19	1	max	- 241	1	78	7	0	7	0	3	0	1	0	1
1032			min	-1 022	7	113	1	- 006	3	0	7	0	1	0	7
1033		2	max	- 241	1	391	7	0	7	0	3	0	7	- 094	1
1034			min	-1 022	7	058	1	- 003	3	0	7	- 005	3	- 646	7
1035		3	max	- 241	1	006	4	0	7	0	3	0	7	- 128	1
1036			min	-1 022	7	002	7	0	3	0	7	- 007	3	- 863	7
1037		4	max	- 241	1	- 05	2	003	1	0	3	0	7	- 102	1
1038			min	-1 022	7	- 387	7	0	4	0	7	- 005	3	- 651	7
1039		5	max	- 241	1	- 105	2	006	1	0	3	0	7	- 01	7
1040			min	-1 022	7	- 775	7	0	4	0	7	0	3	- 026	4
1041	M18	1	max	- 694	2	777	7	0	2	0	1	0	1	0	1
1042			min	-2 732	7	109	1	- 006	1	0	1	0	1	0	1
1043		2	max	- 678	2	389	7	0	2	0	1	0	2	- 09	1
1044			min	-2.732	7	054	1	- 003	1	0	1	- 005	1	- 644	7
1045		3	max	- 662	2	0	1	0	1	0	1	0	2	- 12	1
1046			min	-2 732	7	0	1	0	1	0	1	- 007	1	- 858	7
1047		4	max	- 646	2	- 054	2	003	1	0	1	0	2	- 09	1
1048			min	-2 732	7	- 389	7	0	2	0	1	- 005	1	- 644	7
1049		5	max	- 63	2	- 109	2	006	1	0	1	0	1	0	1
1050			min	-2 732	7	- 777	7	0	2	0	1	0	1	0	1
1051	M17	1	max	- 448	1	393	7	0	2	0	7	0	1	0	1
1052			min	-5 964	7	064	2	- 006	1	0	1	0	1	0	1
1053		2	max	- 448	1	197	7	0	2	0	7	0	2	- 053	2
1054			min	-5 964	7	032	2	- 003	1	0	1	- 005	1	- 326	7
1055		3	max	- 448	1	0	1	0	1	0	7	0	2	- 07	2
1056			min	-5 964	7	0	1	0	1	0	1	- 007	1	- 434	7
1057		4	max	- 448	1	- 032	1	003	1	0	7	0	2	- 053	2
1058			min	-5 964	7	- 197	7	0	2	0	1	- 005	1	- 326	7
1059		5	max	- 448	1	- 064	1	006	1	0	7	0	1	0	1
1060			min	-5 964	7	- 393	7	0	2	0	1	0	1	0	1
1061	M16	1	max	001	6	2 019	7	245	1	12	7	011	7	011	7
1062			min	- 351	1	317	2	- 004	7	018	2	- 016	2	- 016	2
1063		2	max	001	6	1 974	7	245	1	12	7	4	3	- 509	2
1064			min	- 346	1	29	2	- 004	7	018	2	004	7	-3 234	7
1065		3	max	002	6	- 106	1	245	1	002	7	379	4	- 716	1
1066			min	- 179	1	-1 653	7	- 123	4	0	2	- 033	5	-5 505	7
1067		4	max	002	6	- 133	1	245	1	002	7	366	1	- 429	2
1068			min	- 174	1	-1 698	7	- 128	4	0	2	- 018	7	-2 782	7
1069		5	max	002	6	- 161	1	245	1	002	7	764	1	024	6
1070			min	- 169	1	-1 743	7	- 133	4	0	2	- 043	6	- 283	1
1071	M15	1	max	001	2	092	3	011	2	002	7	0	1	0	1

TPF-51

Envelope Member Section Forces (Continued)

	Member	Sec		Axial[k]	LC	y Shear[k]	LC	z Shear[k]	LC	Torque[k-ft]	LC	y-y Mome	LC	z-z Moment[k-ft]	LC
1072			min	- 113	3	055	2	0	1	0	1	0	1	0	1
1073		2	max	001	2	046	3	005	2	002	7	013	2	- 068	1
1074			min	- 096	3	028	2	0	1	0	1	0	1	- 114	3
1075		3	max	001	2	0	1	0	1	002	7	018	2	- 091	2
1076			min	- 079	3	0	1	0	1	0	1	0	1	- 152	3
1077		4	max	001	2	- 028	1	0	1	002	7	013	2	- 068	2
1078			min	- 062	3	- 046	3	- 005	2	0	1	0	1	- 114	3
1079		5	max	001	2	- 055	1	0	1	002	7	0	1	0	1
1080			min	- 045	3	- 092	3	- 011	2	0	1	0	1	0	1
1081	M14	1	max	001	2	092	3	011	2	0	1	0	1	0	1
1082			min	- 19	3	055	1	0	1	0	7	0	1	0	1
1083		2	max	001	2	046	3	005	2	0	1	013	2	- 068	1
1084			min	- 173	3	027	1	0	1	0	7	0	1	- 113	3
1085		3	max	001	2	0	1	0	1	0	1	018	2	- 09	1
1086			min	- 157	3	0	1	0	1	0	7	0	1	- 151	3
1087		4	max	001	2	- 027	1	0	1	0	1	013	2	- 068	1
1088			min	- 14	3	- 046	3	- 005	2	0	7	0	1	- 113	3
1089		5	max	001	2	- 055	1	0	1	0	1	0	1	0	1
1090			min	- 123	3	-.092	3	- 011	2	0	7	0	1	0	1
1091	M13	1	max	- 031	1	1 483	7	0	1	0	7	0	1	0	1
1092			min	- 798	6	327	1	- 01	4	0	1	0	1	0	1
1093		2	max	- 076	1	1 36	7	005	2	0	7	- 003	1	-1 283	1
1094			min	- 798	6	254	1	- 003	7	0	1	- 019	6	-6 279	7
1095		3	max	- 132	1	018	4	002	6	0	7	- 002	1	-1 705	1
1096			min	- 798	6	011	1	0	1	0	1	- 023	6	-8 159	7
1097		4	max	06	3	- 265	2	002	7	0	1	0	1	-1 336	2
1098			min	002	2	-1 38	7	- 006	2	- 001	7	- 011	6	-6 366	7
1099		5	max	014	3	- 339	2	009	4	0	1	0	1	0	1
1100			min	002	2	-1 503	7	0	1	- 001	7	0	1	0	1
1101	M12	1	max	0	1	2 081	7	003	1	0	1	0	1	0	1
1102			min	0	1	436	2	- 002	6	0	1	0	1	0	1
1103		2	max	0	1	111	7	01	3	0	1	0	1	- 921	1
1104			min	- 033	4	008	2	0	2	0	1	- 005	6	-4 354	7
1105		3	max	0	1	- 081	1	003	3	0	1	017	1	- 832	1
1106			min	- 057	4	- 357	7	0	2	0	1	- 003	6	-4 052	7
1107		4	max	0	1	- 169	1	0	6	0	1	017	1	- 525	1
1108			min	- 081	4	- 824	7	- 003	1	0	1	- 002	6	-2 6	7
1109		5	max	0	1	- 258	1	0	6	0	1	0	1	0	1
1110			min	- 105	4	-1 291	7	- 01	1	0	1	0	1	0	1
1111	M11	1	max	0	1	2 087	7	004	3	0	1	0	1	0	1
1112			min	0	1	439	2	001	2	0	1	0	1	0	1
1113		2	max	- 018	1	109	7	01	1	0	1	004	6	- 928	1
1114			min	-1 091	6	007	2	0	6	0	7	002	1	-4 366	7
1115		3	max	- 018	1	- 082	1	003	1	0	1	018	3	- 837	1
1116			min	-1 109	6	- 358	7	0	6	0	7	002	2	-4 06	7
1117		4	max	- 018	1	- 17	1	0	2	0	1	017	3	- 527	1
1118			min	-1 127	6	- 826	7	- 004	3	0	7	0	2	-2 604	7
1119		5	max	- 018	1	- 259	1	0	2	0	1	0	1	0	1
1120			min	-1 145	6	-1 293	7	- 01	3	0	7	0	1	0	1
1121	M10	1	max	005	7	1 219	7	0	2	0	1	0	1	0	1
1122			min	- 123	2	169	1	- 01	1	- 005	7	0	1	0	1
1123		2	max	005	7	61	7	0	2	0	1	0	2	- 238	1
1124			min	- 097	2	084	1	- 005	1	- 005	7	- 015	1	-1 714	7
1125		3	max	005	7	0	1	0	1	0	1	0	2	- 317	1
1126			min	- 071	2	0	1	0	1	- 005	7	- 019	1	-2 286	7
1127		4	max	005	7	- 084	1	005	1	0	1	0	2	- 238	1
1128			min	- 045	2	- 61	7	0	2	- 005	7	- 015	1	-1.714	7

TPF-52

Envelope Member Section Forces (Continued)

	Member	Sec		Axial[k]	LC	y Shear[k]	LC	z Shear[k]	LC	Torque[k-ft]	LC	y-y Mome	LC	z-z Moment[k-ft]	LC
1129		5	max	005	7	- 169	1	01	1	0	1	0	1	0	1
1130			min	- 019	2	-1 219	7	0	2	- 005	7	0	1	0	1
1131	M9	1	max	068	1	1 277	7	036	6	005	7	0	1	0	1
1132			min	- 127	7	.255	2	009	1	0	1	0	1	0	1
1133		2	max	068	1	884	7	036	6	005	7	068	6	- 415	2
1134			min	- 127	7	188	2	014	1	0	1	022	1	-2 026	7
1135		3	max	06	2	- 044	1	- 007	1	005	7	049	6	- 417	1
1136			min	- 163	7	- 178	7	- 013	6	0	1	007	1	-2 145	7
1137		4	max	083	2	- 111	1	- 002	1	005	7	025	6	- 272	1
1138			min	- 163	7	-.572	7	- 013	6	0	1	- 001	1	-1 442	7
1139		5	max	107	2	- 179	1	003	1	005	7	0	1	0	1
1140			min	- 163	7	- 966	7	- 013	6	0	1	0	1	0	1
1141	M8	1	max	074	1	649	7	0	2	001	7	0	1	0	1
1142			min	- 035	7	108	1	- 01	1	0	1	0	1	0	1
1143		2	max	074	1	325	7	0	2	001	7	0	2	- 152	1
1144			min	- 035	7	054	1	- 005	1	0	1	- 015	1	- 913	7
1145		3	max	076	2	0	1	0	1	001	7	0	2	- 203	1
1146			min	- 035	7	0	1	0	1	0	1	- 019	1	-1 217	7
1147		4	max	094	2	- 054	1	005	1	001	7	0	2	- 152	1
1148			min	- 035	7	- 325	7	0	2	0	1	- 015	1	- 913	7
1149		5	max	112	2	- 108	1	01	1	001	7	0	1	0	1
1150			min	- 035	7	- 649	7	0	2	0	1	0	1	0	1
1151	M7	1	max	- 21	1	777	7	0	4	0	1	0	1	0	1
1152			min	- 899	7	109	1	- 006	1	0	1	0	1	0	1
1153		2	max	- 21	1	389	7	0	4	0	1	0	4	- 09	1
1154			min	-.899	7	054	1	- 003	1	0	1	- 005	1	- 644	7
1155		3	max	- 21	1	0	1	0	1	0	1	0	4	- 12	1
1156			min	- 899	7	0	1	0	1	0	1	- 007	1	- 858	7
1157		4	max	- 21	1	- 054	1	003	1	0	1	0	4	- 09	1
1158			min	- 899	7	- 389	7	0	2	0	1	- 005	1	- 644	7
1159		5	max	- 21	1	- 109	1	006	1	0	1	0	1	0	1
1160			min	- 899	7	- 777	7	0	2	0	1	0	1	0	1
1161	M6	1	max	788	6	1 219	7	0	2	005	7	0	1	0	1
1162			min	04	1	169	1	- 01	1	0	1	0	1	0	1
1163		2	max	808	6	61	7	0	2	005	7	0	2	- 238	1
1164			min	04	1	084	1	- 005	1	0	1	- 015	1	-1 714	7
1165		3	max	828	6	0	1	0	1	005	7	0	2	- 317	1
1166			min	.04	1	0	1	0	1	0	1	- 019	1	-2 286	7
1167		4	max	847	6	- 084	1	005	1	005	7	0	2	- 238	1
1168			min	04	1	- 61	7	0	2	0	1	- 015	1	-1 714	7
1169		5	max	867	6	- 169	1	01	1	005	7	0	1	0	1
1170			min	04	1	-1 219	7	0	2	0	1	0	1	0	1
1171	M5	1	max	098	6	1 277	7	- 001	1	- 001	1	0	1	0	1
1172			min	- 126	1	255	2	- 039	6	- 007	7	0	1	0	1
1173		2	max	116	6	883	7	004	1	- 001	1	003	1	- 415	2
1174			min	- 126	1	188	2	- 039	6	- 007	7	- 073	6	-2 026	7
1175		3	max	11	2	- 044	1	014	6	0	1	- 007	1	- 417	1
1176			min	- 099	3	- 178	7	- 003	1	- 006	7	- 053	6	-2.146	7
1177		4	max	133	2	- 111	1	014	6	0	1	- 008	1	- 272	1
1178			min	- 099	3	- 572	7	002	1	- 006	7	- 026	6	-1 442	7
1179		5	max	157	2	- 179	1	014	6	0	1	0	1	0	1
1180			min	- 099	3	- 966	7	007	1	- 006	7	0	1	0	1
1181	M4	1	max	- 11	1	382	7	0	2	0	7	0	1	0	1
1182			min	- 47	7	064	1	- 006	1	0	2	0	1	0	1
1183		2	max	- 11	1	191	7	0	2	0	7	0	2	- 053	1
1184			min	- 47	7	032	1	- 003	1	0	2	- 005	1	- 316	7
1185		3	max	- 11	1	0	1	0	1	0	7	0	2	- 07	1

TPF-53

Envelope Member Section Forces (Continued)

	Member	Sec		Axial[k]	LC	y Shear[k]	LC	z Shear[k]	LC	Torque[k-ft]	LC	y-y Mome	LC	z-z Moment[k-ft]	LC
1186			min	- 47	7	0	1	0	1	0	2	- 007	1	- 422	7
1187		4	max	- 11	1	- 032	1	003	1	0	7	0	2	- 053	1
1188			min	- 47	7	- 191	7	0	2	0	2	- 005	1	- 316	7
1189		5	max	- 11	1	- 064	1	006	1	0	7	0	1	0	1
1190			min	- 47	7	- 382	7	0	2	0	2	0	1	0	1
1191	M3	1	max	932	3	5 646	7	- 029	1	0	1	0	1	0	1
1192			min	026	7	1 107	1	- 834	6	0	1	0	1	0	1
1193		2	max	775	3	3 558	7	388	6	0	1	108	5	-4 158	1
1194			min	- 012	7	.608	1	031	1	0	7	- 219	2	-22 595	7
1195		3	max	694	5	134	7	015	1	0	7	031	2	-5 391	1
1196			min	434	2	008	2	- 229	7	0	1	- 609	7	-30 267	7
1197		4	max	679	6	- 538	1	- 051	1	0	7	002	3	-3 813	1
1198			min	282	1	-3 206	7	-.34	6	0	1	- 249	2	-20 777	7
1199		5	max	0	1	-1 052	1	795	6	0	1	0	1	0	1
1200			min	0	1	-5 32	7	102	1	0	1	0	1	0	1
1201	M2	1	max	3	3	934	7	0	1	0	1	0	1	0	1
1202			min	- 014	2	279	1	- 033	6	0	1	0	1	0	1
1203		2	max	218	3	807	7	0	1	0	1	- 004	1	-1 275	1
1204			min	- 014	2	203	1	- 016	6	0	1	- 13	6	-4 606	7
1205		3	max	181	3	002	4	0	7	0	1	- 012	1	-1 75	1
1206			min	0	2	001	1	- 002	3	0	1	- 173	6	-6 394	7
1207		4	max	082	1	- 204	2	016	6	0	1	- 013	1	-1 281	2
1208			min	0	2	- 808	7	002	1	0	1	- 131	6	-4 615	7
1209		5	max	0	1	- 28	2	033	6	0	1	0	1	0	1
1210			min	0	1	- 936	7	002	1	0	1	0	1	0	1
1211	M1	1	max	214	3	2 267	7	- 006	1	0	1	0	1	0	1
1212			min	- 017	2	474	2	-.114	6	0	1	0	1	0	1
1213		2	max	175	3	296	7	023	6	0	1	- 011	1	-1	1
1214			min	005	2	085	2	0	1	0	1	- 2	6	-4.719	7
1215		3	max	134	3	252	7	029	6	0	1	- 009	1	-1 208	1
1216			min	005	2	058	2	0	1	0	1	- 124	6	-5 516	7
1217		4	max	041	1	- 386	2	011	6	0	1	- 006	1	-1 16	2
1218			min	0	2	-1 808	7	002	1	0	1	-.041	6	-5 323	7
1219		5	max	0	1	- 412	2	017	6	0	1	0	1	0	1
1220			min	0	1	-1 852	7	002	1	0	1	0	1	0	1
1221	M123	1	max	027	1	048	7	0	1	0	1	0	1	0	4
1222			min	0	2	029	1	- 009	2	0	1	0	1	0	1
1223		2	max	023	1	024	7	0	1	0	1	0	1	- 034	2
1224			min	0	2	014	1	- 004	2	0	1	- 01	4	- 057	5
1225		3	max	019	1	0	7	0	1	0	1	0	1	- 045	2
1226			min	0	2	0	1	0	1	0	1	- 014	4	- 076	7
1227		4	max	014	1	- 014	2	004	2	0	1	0	1	- 034	2
1228			min	0	2	- 024	3	0	1	0	1	- 01	4	- 057	7
1229		5	max	01	1	- 029	2	009	2	0	1	0	1	0	2
1230			min	0	2	- 048	3	0	1	0	1	0	1	0	7
1231	M124	1	max	1 404	7	019	4	004	1	0	1	0	1	0	1
1232			min	326	1	01	1	0	4	0	1	0	1	0	1
1233		2	max	1 411	7	009	4	002	1	0	1	016	3	- 004	1
1234			min	331	1	005	1	0	4	0	1	01	2	- 015	4
1235		3	max	1 419	7	0	1	0	1	0	1	022	3	- 006	1
1236			min	335	1	0	1	0	1	0	1	013	2	- 02	4
1237		4	max	1 427	7	- 005	1	0	2	0	1	016	3	- 004	1
1238			min	339	2	- 009	4	- 002	3	0	1	01	2	- 015	4
1239		5	max	1 434	7	- 01	1	0	2	0	1	0	1	0	1
1240			min	342	2	- 019	4	- 004	3	0	1	0	1	0	1
1241	M125	1	max	637	7	019	4	004	3	0	1	0	1	0	1
1242			min	143	1	01	1	0	2	0	1	0	1	0	1

Envelope Member Section Forces (Continued)

	Member	Sec		Axial[k]	LC	y Shear[k]	LC	z Shear[k]	LC	Torque[k-ft]	LC	y-y Mome	LC	z-z Moment[k-ft]	LC
1243		2	max	644	7	009	4	002	3	0	1	016	3	- 004	1
1244			min	148	1	005	1	0	2	0	1	01	2	- 015	4
1245		3	max	652	7	0	1	0	1	0	1	022	3	- 006	1
1246			min	152	2	0	1	0	1	0	1	013	2	- 02	4
1247		4	max	66	7	- 005	1	0	2	0	1	016	3	- 004	1
1248			min	155	2	- 009	4	- 002	1	0	1	01	2	- 015	4
1249		5	max	667	7	- 01	1	0	2	0	1	0	1	0	1
1250			min	159	2	- 019	4	- 004	1	0	1	0	1	0	1

Hot Rolled Steel Section Sets

	Label	Shape	Type	Design List	Material	Design Rules	A [in2]	Iyy [in4]	Izz [in4]	J [in4]
1	Upper Angle	L6X3 5X5	Beam	Single Angle	A36 Gr 36	Typical	2 87	2 85	10 9	103
2	M5	W8X31	Beam	Wide Flange	A992	Typical	9 13	37 1	110	54
3	M4	C8X18 75	Beam	Channel	A36 Gr 36	Typical	5 51	1 98	44	44
4	Vert Brace	L3X3X6	VBrace	Single Angle	A36 Gr 36	Typical	2 11	1 76	1 76	103
5	LANDING	C8X11 5	Beam	Channel	A36 Gr 36	Typical	3.38	1 32	32 6	13
6	Horiz. Brace	L3 5X3 5X4	HBrace	Wide Flange	A36 Gr.36	Typical	1 69	2 01	2 01	039
7	M3	W8X18	Beam	Wide Flange	A992	Typical	5 26	7 97	61 9	17
8	STRINGER	C12X30	Beam	Channel	A36 Gr 36	Typical	8 82	5 14	162	87
9	M2	W8X15	Beam	Wide Flange	A992	Typical	4 44	3 41	48	14
10	M1	W8X24	Beam	Wide Flange	A992	Typical	7 08	18 3	82 8	35

CAUSTIC TANK SUPPORTS –

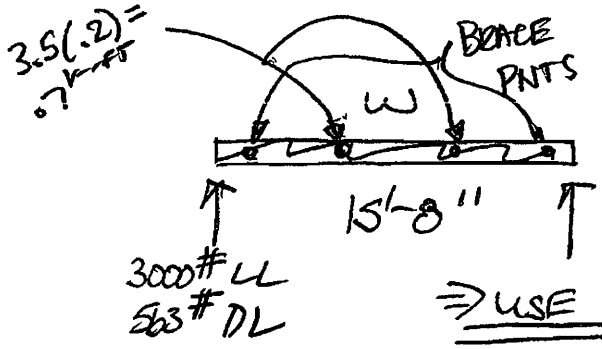

W = 3.5(15) = 52.5 PLF DL
3.5(100) = 350 PLF LL

⇒ USE W10X26

WALL CONNECTION –

$P_u = 563(1.2) + 3000(1.6) = 5476^{\#}$

$M_u = 5476(2.8) = 13690$ IN-LBS

⇒ USE 2-L 4x4x3/4 x 0-7 w/ 2-3/4"ø x 4" EMBED STAINLESS STEEL KB-TZ. EA ANGLE 4-TOTAL

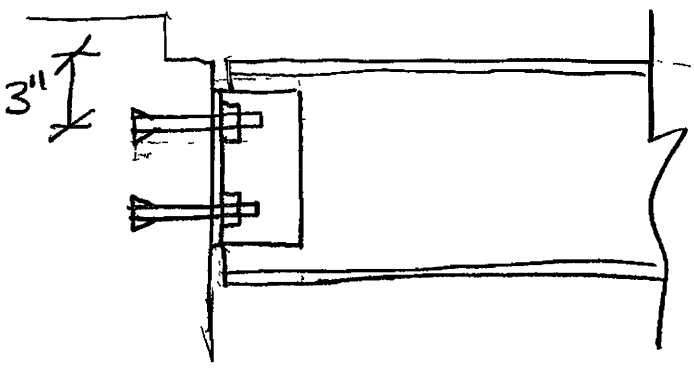

KRAMER GEHLEN ASSOCIATES	PROJECT PDX DEICING PLATFORMS		
	CLIENT		
CONSULTING ENGINEERS – STRUCTURAL/CIVIL 400 Columbia St 360 / 693-1621 Suite 240 503 / 289-2661 Vancouver, WA Fax 360 / 696-1572 98660-3413 www.kga.cc	DATE 8/18/10	DESIGN JB	
	PROJECT NO 10101	SHEET CT-1	

Project
Location Caustic Pit Beam
Uniformly Loaded Floor Beam
[2006 International Residential Code(AISC 13th Ed ASD)]
A992-50 W10x15 x 15 0 FT
Section Adequate By 119 3%
Controlling Factor Deflection

Justin Berg
Kramer Gehlen & Associates, Inc
400 Columbia Street, suite 240
vancouver, WA 98660

page of

StruCalc Version 8 0 101 0 8/18/2010 4 17 57 PM

DEFLECTIONS Center

Live Load	0 23	IN L/789
Dead Load	0 04	in
Total Load	0 27	IN L/665

Live Load Deflection Criteria L/360 Total Load Deflection Criteria L/240

REACTIONS

	A	B
Live Load	3000 lb	3000 lb
Dead Load	563 lb	563 lb
Total Load	3563 lb	3563 lb
Bearing Length	0 57 in	0 57 in

BEAM DATA

	Center
Span Length	15 ft
Unbraced Length-Top	0 ft

LOADING DIAGRAM

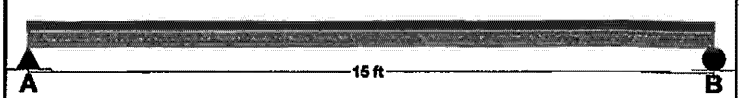

FLOOR LOADING

		Side 1	Side 2
Floor Live Load	FLL =	100 psf	40 psf
Floor Dead Load	FDL =	15 psf	15 psf
Floor Tributary Width	FTW =	4 ft	0 ft
Wall Load	WALL =	0 plf	

BEAM LOADING

Beam Total Live Load	wL =	400 plf
Beam Total Dead Load	wD =	60 plf
Beam Self Weight	BSW =	15 plf
Total Maximum Load	wT =	475 plf

STEEL PROPERTIES
W10x15 - A992-50

Properties

Yield Stress	Fy =	50	ksi
Modulus of Elasticity	E =	29000	ksi
Depth	d =	10	in
Web Thickness	tw =	0 23	in
Flange Width	bf =	4	in
Flange Thickness	tf =	0 27	in
Distance to Web Toe of Fillet	k =	0 57	in
Moment of Inertia About X-X Axis	Ix =	68 9	in4
Section Modulus About X-X Axis	Sx =	13 8	in3
Plastic Section Modulus About X-X Axis	Zx =	16	in3

Design Properties per AISC 13th Edition Steel Manual

Flange Buckling Ratio	FBR =	7 41	
Allowable Flange Buckling Ratio	AFBR =	9 15	
Web Buckling Ratio	WBR =	38 52	
Allowable Web Buckling Ratio	AWBR =	90 55	
Controlling Unbraced Length	Lb =	0	ft
Limiting Unbraced Length - for lateral-torsional buckling	Lp =	2 86	ft
Nominal Flexural Strength w/ safety factor	Mn =	39920	ft-lb
Controlling Equation	F2-1		
Web height to thickness ratio	h/tw =	38 52	
Limiting height to thickness ratio for eqn G2-2	h/tw-limit =	53 95	
Cv Factor	Cv =	1	
Controlling Equation	G2-2		
Nominal Shear Strength w/ safety factor	Vn =	46000	lb

Controlling Moment 13359 ft-lb
7 5 ft from left support
Created by combining all dead and live loads

Controlling Shear 3563 lb
At support
Created by combining all dead and live loads

Comparisons with required sections	Req'd	Provided
Moment of Inertia (deflection)	31 42 in4	68 9 in4
Moment:	13359 ft-lb	39920 ft-lb
Shear	3563 lb	46000 lb

NOTES

CT-2

Title
Dsgnr
Description

Scope

Job #
Date 4 20PM, 25 AUG 10

Rev 560100
User KW-0602535 Ver 5 6 1, 25-Oct-2002
(c)1983-2002 ENERCALC Engineering Software

Steel Beam w/ Torsional Loads

Description Caustic Pit Beam

General Information

Calculations are designed to AISC 9th Edition ASD and 1997 UBC Requirements

Steel Section	**W10X26**	Fy	50 00 ksi
		Load Duration Factor	1 00
Beam Span	15 67 ft	Beam Wt ignored	
Torsional End Fixity	Fix-Fix	Unbraced Length	13 00 ft
Bending End Fixity	Pin-Pin	Elastic Modulus	29,000 00 ksi

Applied Loads

Uniform Loads	Dead Load	Live Load	Short Term	Ecc from Beam CL
# 1	0 050	0 350	k/ft	in
Torsional Moments	Dead Load	Live Load	Short Term	Ecc from Beam CL
# 1			0 700 k-ft	4 000 ft
# 2			0 700 k-ft	8 000 ft

Summary

Using W10X26, Span = 15 67ft, Fy = 50 0ksi, End Fixity Bending= Pinned-Pinned, Torsion= Fixed-Fixed

Max Flange Bending Stress	13 63 ksi		
Allowable	18 91 ksi		
Flange Stress Ratio	0 244 1	Max Deflection	0 130 in
Max Flange Shear Stress	3 45 ksi	Max Rotation	0 03117 rad
Allowable	20 00 ksi		
Flange Stress Ratio	0 051 1		

Summary Analysis

		Dead	Live	DL + LL	DL+LL+Short Term
Flange Bend + Warp		0 66 ksi	4 62 ksi	5 28 ksi	13 63 ksi
Allowable		18 91 ksi	18 91 ksi	18 91 ksi	18 91 ksi
Stress Ratio		0 035 1	0 244 1	0 279 1	0 721 1
Flange Bend+Warp+Tors		ksi	ksi	18 91 ksi	3 45 ksi
Web Bend + Warp		0 15 ksi	1 02 ksi	1 17 ksi	2 48 ksi
Allowable		20 00 ksi	20 00 ksi	20 00 ksi	20 00 ksi
Stress Ratio		0 007 1	0 051 1	0 058 . 1	0 172 1
Moments	Left	k-ft	k-ft	k-ft	k-ft
	Center	1 53 k-ft	10 74 k-ft	12 27 k-ft	12 27 k-ft
	Right	k-ft	k-ft	k-ft	k-ft
Reactions	Left	0 39 k	2 74 k	3 13 k	3 13 k
	Right	0 39 k	2 74 k	3 13 k	3 13 k
Deflections		0 016 in	0 114 in	0 130 in	0 130 in
X-Dist to maximum		7 83 ft	7 83 ft	7 83 ft	7 83 ft
Rotations		rad	rad	rad	0 031 rad
X-Dist to maximum		ft	ft	ft	7 31 ft

Fa calc'd per Eq E2-2 K*L/r > Cc
I Beam, Major Axis L/rT > (510 000 * Cb / Fy)^ 5 Fb per Eq F1-7
I Beam, Major Axis, Fb per Eq F1-8, Fb = 12,000 Cb Af / (l * d)

CT-3

Rev: 560100
User: KW-0602535 Ver 5 6 1 25-Oct-2002
(c)1983-2002 ENERCALC Engineering Software

Steel Beam w/ Torsional Loads

Description Caustic Pit Beam

Section Properties

Section Name	W10X26	Sw 1	9 055 in4	Weight	25 849 #/ft
Depth	10 330 in	Sw 2	0 000 in4	rT	1 5400 in
Web Thick	0 260 in	Sw 3	0 000 in4	r xx	4 3500 in
Flange Width	5 770 in	Qf	5 994	r yy	1 3612 in
Flange Thick	0 440 in	Qw	15 457		
Area	7 610 in2	J	0 427 in4		
I xx	144 000 in4	Eo	0 000		
I yy	14 100 in4	Wno	14 266 in2		
S xx	27 880 in3	Wn2	0 000 in2		
S yy	4 887 in3	Cw	344 788		
		a	45 707 in		

CT-4

Company		Page	1
Specifier		Project	PDX Deicing Platform
Address		Sub-Project I Pos No	Caustic Pit
Phone I Fax	- | -	Date	8/25/2010
E-Mail			

Specifier's comments Anchors

Input data

Anchor type and diameter	**Kwik Bolt TZ - SS 316, 1/2 (3 1/4)**
Effective embedment depth	h_{ef} = 3 250 in
Material	AISI 316
Evaluation Service Report	ESR 1917
Issued I Valid	9/1/2007 | -
Proof	design method ACI 318 / AC 193
Stand-off installation	e_b = 0 000 in (no stand-off), t = 0 375 in
Anchor plate	l_x x l_y x t = 7 000 x 7 000 x 0 375 in (Recommended plate thickness not calculated)
Profile	no profile
Base material	cracked concrete , 4000, f_c' = 4000 psi, h = 12 000 in
Reinforcement	condition B, no supplemental splitting reinforcement present edge reinforcement none or < No 4 bar

Geometry [in]

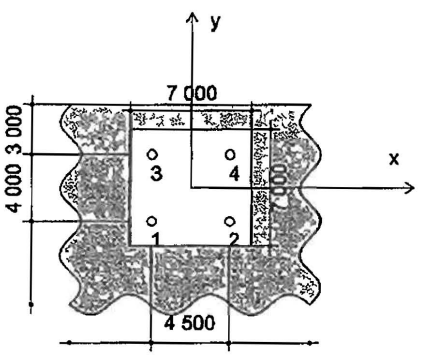

Loading [lb, in.-lb]

Governing loads

N = 0	V_y = -5476
M_z= 0 000	M_y = 0 000

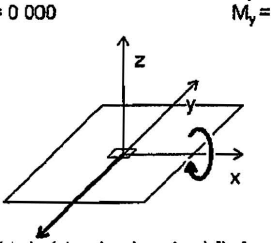

Eccentricity (structural section) [in]

e_x = 0 000	V_x = 0
e_y = 0 000	M_x = 13690 000

Proof I Utilization (Governing Cases)

		Design values [lb]		Utilization [%]	
Loading	Proof	Load	Capacity	β_N/β_V	Status
Tension	Concrete Breakout Strength	2779	4276	65 / -	OK
Shear	Pryout Strength	5476	13888	- / 39	OK

Loading	β_N	β_V	ζ	Utilization β_{NV}[%]	Status
Combined tension and shear loads	0 650	0 394	5/3	70	OK

Warnings

- Please consider all details and hints/warnings given in the detailed report!

Fastening meets the design criteria!

PROFIS Anchor (c) 2003 2009 Hilti AG FL-9494 Schaan Hilti is a registered Trademark of Hilti AG, Schaan

CT-5

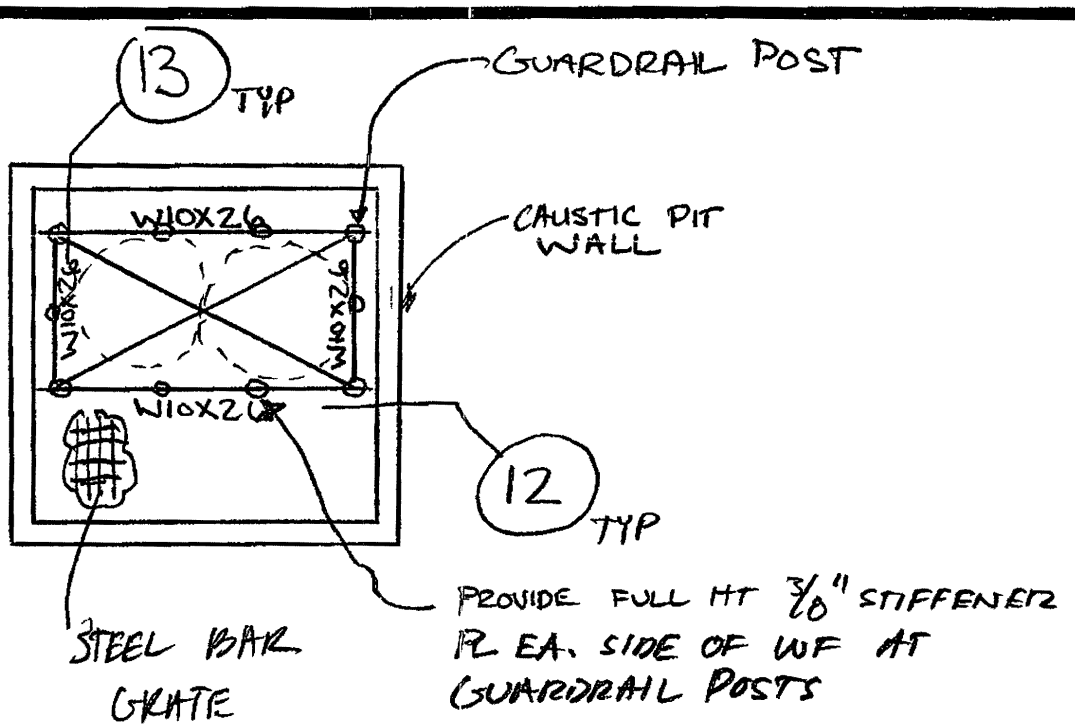

CAUSTIC PIT PLAN

1/8" = 1'-0"

KRAMER GEHLEN ASSOCIATES

PROJECT PDX DEICING PLATFORM

CLIENT

CONSULTING ENGINEERS – STRUCTURAL/CIVIL
400 Columbia St.
Suite 240
Vancouver WA
98660-3413

360 / 693-1621
503 / 289-2661
Fax 360 / 696-1572
www.kga.cc

DATE	DESIGN
8/25/10	JB
PROJECT NO	SHEET
10101	CT-6

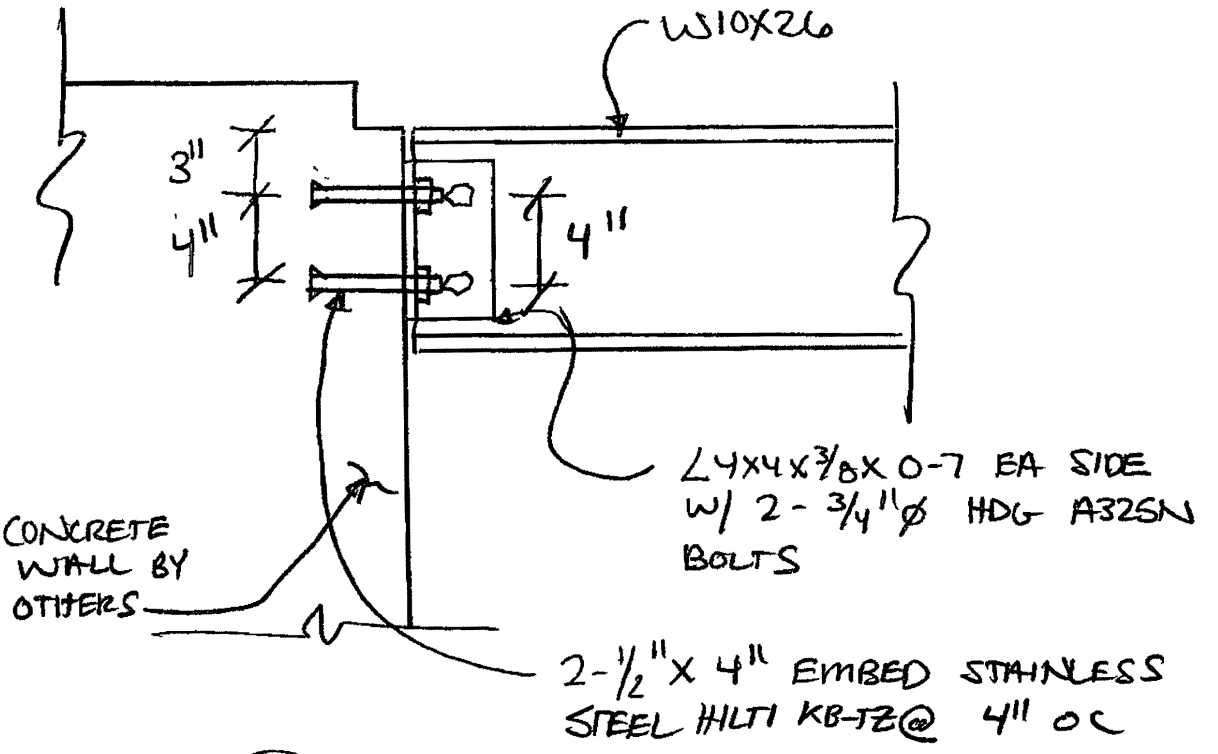

12 SECTION
1 1/2"=1'-0"

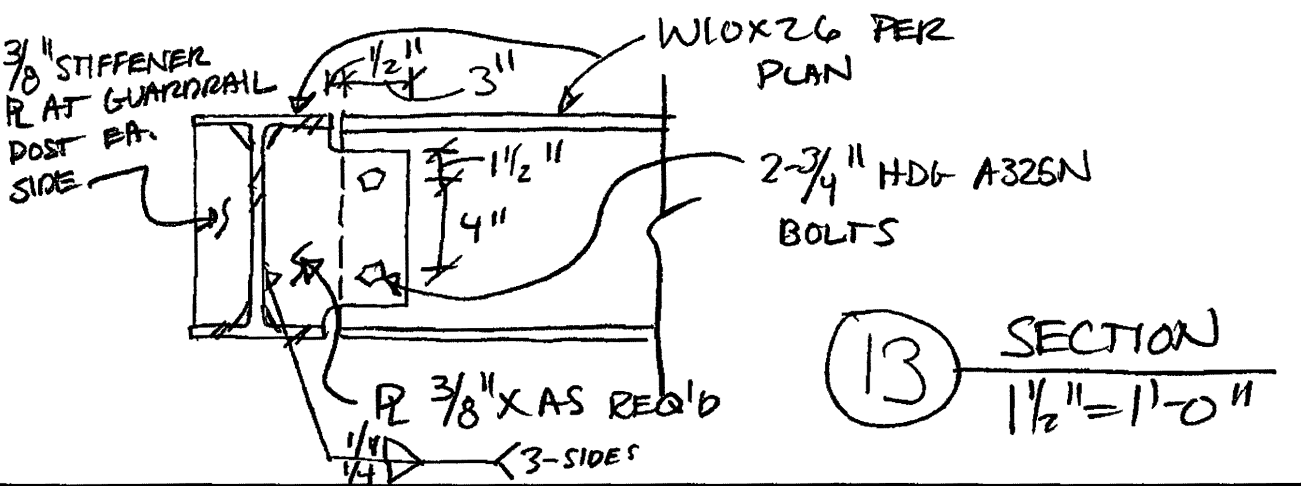

13 SECTION
1 1/2"=1'-0"

KGA
KRAMER GEHLEN ASSOCIATES

PROJECT PDX DEICING PLATFORM
CLIENT

CONSULTING ENGINEERS – STRUCTURAL/CIVIL
400 Columbia St.
Suite 240
Vancouver WA
98660 3413
360 / 693-1621
503 / 289-2661
Fax 360 / 696-1572
www.kga.cc

DATE	DESIGN
8/25/10	JB
PROJECT NO	SHEET
10181	CT-7

GUARDRAIL DESIGN –

POST –

$f_y = 35$ ksi

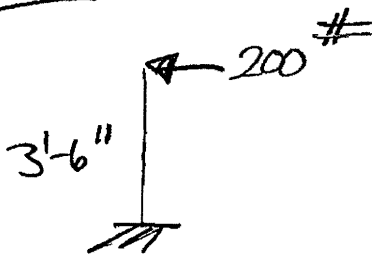

1.5" ϕ STD PIPE OK

HORIZONTAL –

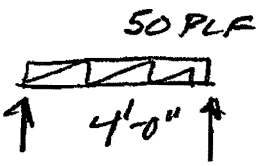

1 1/2" ϕ STD PIPE OK

CHECK WELD AT POST BASE –

$M = 200(42) = 8400$ IN-LBS

$R = .95$ IN $\quad S = \pi(.95)^2 = 2.835$ IN^3

$I = 2\pi(.95)^3 = 5.387$ IN^4

$l_{WELD} = 2\pi(.95) = 5.96$ IN / 2 = 3"

WELD STRESS = 8400 / 5.387 = 1.559 K/IN ⇒ **USE 3/16" FILLET WELD ALL AROUND.**

CHECK BENDING OF C12X30 WEB – $t_w = .51"$

$S_{REQ'D} = 8400 / .6(36000) = .388$ IN^3

$S_{ACT} = 12(.51)^2/6 = .52$ IN$^3 > .39$ ⇒ **OK**

KGA KRAMER GEHLEN ASSOCIATES	PROJECT PDX DEICING PLATFORM STAIRS		
	CLIENT		
CONSULTING ENGINEERS – STRUCTURAL/CIVIL 400 Columbia St 360 / 693-1621 Suite 240 503 / 289-2661 Vancouver WA Fax 360 / 696-1572 98660 3413 www.kga.cc	DATE 8/18/10	DESIGN JB	
	PROJECT NO 10181-00	SHEET GR-1	

Project
Location Guardrail Post
Column
[2006 International Residential Code(AISC 13th Ed ASD)]
HSS 1 900 x 0 145 x 3 5 FT /ASTM A53-GR.B
Section Adequate By 15 3%

Justin Berg
Kramer Gehlen & Associates, Inc
400 Columbia Street, suite 240
vancouver, WA 98660

StruCalc Version 8 0 101 0 8/18/2010 9 39 10 AM

CAUTIONS
* This column has been designed as a cantilever
* Note that the length of the column inputed should include the portion of the column below grade above the point of fixity See IBC 1805 7 for lateral soil bearing calculations

DEFLECTIONS

Deflection due to lateral loads only	Defl = 0 58	IN = L/72
Live Load Deflection Criteria		L/1

VERTICAL REACTIONS

Live Load	Vert-LL-Rxn =	0	lb
Dead Load	Vert-DL-Rxn =	10	lb
Total Load	Vert-TL-Rxn =	10	lb

HORIZONTAL REACTIONS

Total Reaction at Top of Column	TL-Rxn-Top =	0	lb
Total Reaction at Bottom of Column	TL-Rxn-Bottom =	200	lb

COLUMN DATA

Total Column Length	3 5	ft
Unbraced Length (X-Axis) Ly	3 5	ft
Unbraced Length (Y-Axis) Ly	3 5	ft
Column End Condition-K (e)	2 1	

COLUMN PROPERTIES
HSS 1 900 x 0 145 - Round

Steel Yield Strength	Fy =	35 ksi		
Modulus of Elasticity	E =	29 ksi		
Column Section	dx =	1 9 in	dy =	1 9 in
Column Wall Thickness	t =	0 135 in		
Area	A =	0 75 in		
Moment of Inertia (deflection)	Ix =	0 29 in4	Iy =	0 29 in4
Section Modulus	Sx =	0 31 in3	Sy =	0 31 in3
Plastic Section Modulus	Zx =	0 42 in3	Zy =	15 2 in3
Rad of Gyration	rx =	0 63 in	ry =	0 63 in

Column Compression Calculations

KL/r Ratio	KLx/rx =	140 89	KLy/ry =	140 89
Controlling Direction for Compr Calcs (Y-Y Axis)				
Flexural Buckling Stress	Fcr =	12 64 ksi		
Controlling Equation	F8-1			
Nominal Compressive Strength	Pc =	6 kip		

Column Bending Calculations per AISC 13th Edition Steel Manual:
Controlling Load Case Axial Dead Load and Lateral Loads (D + Lateral)

Eccentricity Moment	Mx-ex =	0 ft-lb	My-ey =	0 ft-lb
Lateral Moment + Eccentricity	Mrx =	700 ft-lb	Mry =	0 ft-lb
Flange Buckling Ratio	FBR =	14 07		
Allow Flange Buckling Ratio	AFBR =	58		
Allow FBR for Non-Compact:	NC =	256 86		
Nmnl Flex. Str w/ Sfty Factor	Mcx =	0 7 ft-kip	Mcy =	0 7 ft-kip
Controlling Equation	F8-1			

Combined Stress Calculations
H1-1b Controls 0 85
Controlling Combined Stress Factor 0 85

LOADING DIAGRAM

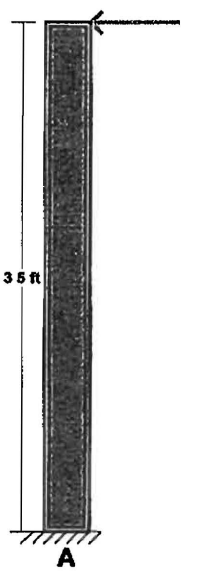

AXIAL LOADING

Live Load	PL =	0 lb
Dead Load	PD =	0 lb
Column Self Weight.	CSW =	10 lb
Total Load	PT =	10 lb

LATERAL LOADING (Dy Face)

Uniform Lateral Load	wL-Lat =	0 plf
Point Load		One
Live Load		200 lb
Location		0 ft

NOTES

GR-2

Project
Location Guardrail Horiz
Multi-Loaded Multi-Span Beam
[2006 International Residential Code(AISC 13th Ed ASD)]
HSS 1 900 x 0 145 x 4 0 FT / ASTM A53-GR B
Section Adequate By 293 4%
Controlling Factor Deflection

Justin Berg
Kramer Gehlen & Associates, Inc
400 Columbia Street, suite 240
vancouver, WA 98660

page of

StruCalc Version 8 0 101 0 8/18/2010 9 41 45 AM

DEFLECTIONS	Center	
Live Load	0 03	IN L/1416
Dead Load	0 00	in
Total Load	0 04	IN L/1343

Live Load Deflection Criteria L/360 Total Load Deflection Criteria L/240

REACTIONS	A	B
Live Load	100 lb	100 lb
Dead Load	5 lb	5 lb
Total Load	105 lb	105 lb
Bearing Length	0 27 in	0 27 in

BEAM DATA	Center
Span Length	4 ft
Unbraced Length-Top	0 ft
Unbraced Length-Bottom	4 ft

LOADING DIAGRAM

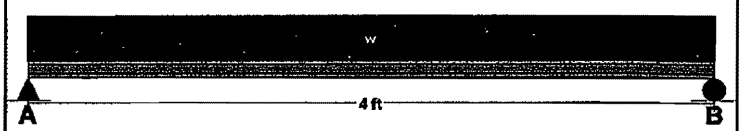

UNIFORM LOADS	Center	
Uniform Live Load	50	plf
Uniform Dead Load	0	plf
Beam Self Weight	3	plf
Total Uniform Load	53	plf

STEEL PROPERTIES
HSS 1 900 x 0 145 - A53-GR B

Properties

Steel Yield Strength	Fy =	35	ksi
Modulus of Elasticity	E =	29000	ksi
Tube Steel Section (X Axis)	dx =	1 9	in
Tube Steel Section (Y Axis)	dy =	1 9	in
Tube Steel Wall Thickness	t =	0 135	in
Area	A =	0 75	in2
Moment of Inertia (X Axis)	Ix =	0 29	in4
Section Modulus (X Axis)	Sx =	0 31	in3
Plastic Section Modulus	Z =	0 42	in3

Design Properties per AISC 13th Edition Steel Manual

Flange Buckling Ratio	FBR =	14 07	
Allowable Flange Buckling Ratio	AFBR =	58	
Allowable Flange Buckling Ratio non-compact	AFBR_NC =	256 86	
Nominal Flexural Strength w/ Safety Factor	Mn =	735	ft-lb
Controlling Equation	F8-1		
Shear Buckling Stress Coefficient Eqn G6-2a	Fcr =	21	ksi
Nominal Shear Strength w/ Safety Factor	Vn =	4709	lb

Controlling Moment. 105 ft-lb
2 0 Ft from left support of span 2 (Center Span)
Created by combining all dead loads and live loads on span(s) 2
Controlling Shear 105 lb
At left support of span 2 (Center Span)
Created by combining all dead loads and live loads on span(s

Comparisons with required sections	Req'd	Provided
Moment of Inertia (deflection)	0 07 in4	0 29 in4
Moment	105 ft-lb	735 ft-lb
Shear	105 lb	4709 lb

NOTES

GR-3

GUARD RAIL BASEPLATE CONCRETE ANCHORS –

$M_u = 8400(1.6) = 1340$ IN-LBS

$V = 200(1.6) = 320^{\#}$ $t_{SLAB} = 6''$

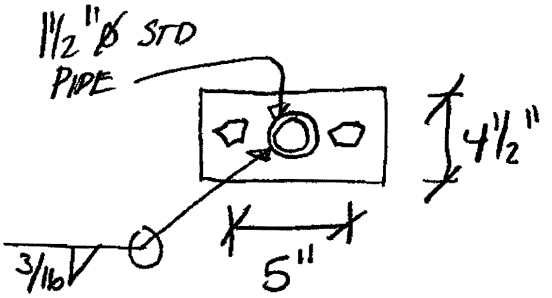

⇒ USE PL 1/2 X 4 X 0-8 W/ 2 - 1/2" X 3 1/4 EMBED HILTI STAINLESS STEEL KB-TZ.

KGA KRAMER GEHLEN ASSOCIATES	PROJECT PDX DEICING PLATFORM STAIRS		
	CLIENT		
CONSULTING ENGINEERS – STRUCTURAL/CIVIL 400 Columbia St 360 / 693-1621 Suite 240 503 / 289-2661 Vancouver WA Fax 360 / 696 1572 98660-3413 www kga cc	DATE 8/18/10	DESIGN JB	
	PROJECT NO 10101	SHEET GR-4	

Company		Page	1
Specifier		Project	PDX Deicing Platform
Address		Sub-Project I Pos. No.	Treatment Room
Phone I Fax	- | -	Date	8/24/2010
E-Mail			

Specifier's comments Guardrail Post Anchors

Input data

Anchor type and diameter	**Kwik Bolt TZ - SS 316, 1/2 (3 1/4)**
Effective embedment depth	h_{ef} = 3.250 in.
Material	AISI 316
Evaluation Service Report	ESR 1917
Issued I Valid	9/1/2007 | -
Proof	design method ACI 318 / AC 193
Stand-off installation	e_b = 0.000 in. (no stand-off), t = 0.500 in.
Anchor plate	l_x x l_y x t = 4.500 x 8.000 x 0.500 in.; (Recommended plate thickness: not calculated)
Profile	Round HSS, Steel pipe (AISC), (L x W x T) = 1.900 in. x 1.900 in. x 0.145 in.
Base material	cracked concrete , 4000, f'_c = 4000 psi, h = 6.000 in.
Reinforcement	condition A, no supplemental splitting reinforcement present edge reinforcement: none or < No. 4 bar

Geometry [in.]

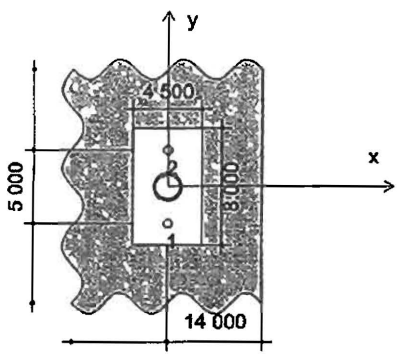

Loading [lb, in.-lb]

Governing loads

N = 0	V_y = 0
M_z = 0.000	M_y = 13440.000

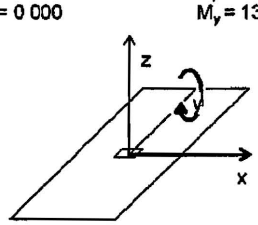

Eccentricity (structural section) [in.]

e_x = 0.000	V_x = 320
e_y = 0.000	M_x = 0.000

Proof I Utilization (Governing Cases)

		Design values [lb]		Utilization [%]	
Loading	Proof	Load	Capacity	β_N/β_V	Status
Tension	Concrete Breakout Strength	6934	7147	97 / -	OK
Shear	Concrete edge failure in direction x+	320	5718	- / 6	OK

Loading	β_N	β_V	ζ	Utilization β_{NV}[%]	Status
Combined tension and shear loads	0.970	0.056	-	86	OK

Warnings

- Please consider all details and hints/warnings given in the detailed report!

Fastening meets the design criteria!

PROFIS Anchor (c) 2003-2009 Hilti AG, FL-9494 Schaan. Hilti is a registered Trademark of Hilti AG, Schaan.

G-12-5