catena consulting engineers

December 19, 2012

Mr. Bruce Jensen
Design & Construction, Oregon Health & Science University
3181 SW Sam Jackson Park Road
Mail Code CSB 210
Portland, OR 97239

RE: OHSU MNP 4 GI Equipment Replacement
Project Number: 2012103.00

Dear Bruce:

The attached calculation pages 1 through 8 verify that the fourth floor structure of Multnomah Pavilion at OHSU in Portland, Oregon, is adequate to support the weight of the proposed equipment booms in rooms 4219, 4225, and 4230. The calculations also verify that the base anchorage shown in structural detail S1 dated September 11, 2012 meets the requirements of the 2010 Oregon Structural Specialty Code.

Respectfully,

catena consulting engineers

STRUCTURAL REGISTERED PROFESSIONAL ENGINEER 17375PE OREGON SEPT 28, 1994 CHRISTOPHER L. THOMPSON

12.19.12

EXPIRES: 06/30/2014

13-110584-FA

N. Jacob Stept
Associate

Christopher L. Thompson
Principal

F-6

catena consulting engineers	Project: OHSU MNP4 GI Equipment	No: 2012103.00	Page: 1
	Subject: Floor Capacity	By: MJ	Date: 8/23/12

Evaluate (e) concrete floor joists for loads from new GE Nuboom M4

Equipment weight = 921 lbs
Equipment footprint = 31" × 26"

Existing joists span 19'-8"

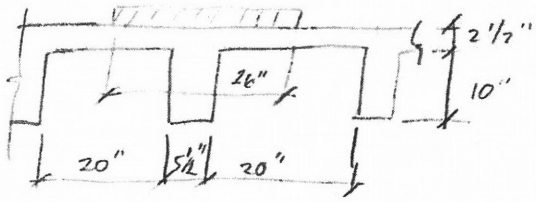

Joist 3J1

10" joist @ 25.5" o.c. w/ 2½" conc. topping, 20" clr.

self wt = $[(2.5"(25.5") + 5.5"(10")]\frac{150 lb/ft^3}{144 in^2/ft^2}$ = 123.7 plf

mech, ceiling, misc $5 psf \times \frac{25.5"}{12"/ft}$ = 10.6 plf

w_D = 134.3 plf

Floor live load = 60 psf for Hospital Operating Room (ASCE 7-05 Table 4-1)

$w_L = (60 psf)\left(\frac{25.5"}{12"/ft}\right) = 127.5$ plf

$w_u = 1.2(134.3) + 1.6(127.5) = 365.2$ plf

Assuming simply supported ends,

$M_u = .365(19.67')^2/8 = 17.65$ k·ft = 211.9 k·in

$f'_c = 3000$ psi $f_y = 40$ ksi

1 #8 + 1 #6 @ midspan, $A_s = 1.23 in^2$

$a = \frac{40(1.23)}{.85(25.5)(3)} = 0.757"$ $d = 12.5 - .75 - \frac{1}{2} = 11.25"$

$\phi M_n = .9(40)(1.23)(11.25 - \frac{.757}{2}) = 481.4$ k·in

Moment from Nuboom

$M_u = 1.2(921 lb)(19.67')/4 = 5435$ lb·ft = 65.2 k·in

Moment from 702 lb C-arm (mobile)

$M_u = 1.2(702)(19.67')/4 = 4142$ lb·ft = 49.7 k·in

Total M_u = 211.9 + 65.2 + 49.7

= 326.8 k·in < ϕM_n = 481.4 k·in OK

∴ Moment capacity of 3J1 is adequate.

Shear:

(e) loads $V_u = 365.2(19.67)/2 = 3591$

Nuboom $V_u = .75(921) = 691$

C-arm $V_u = .75(702) = 527$

Total V_u = 4809 lb

$\phi V_n = .75(2)(5.5)(11.25)\sqrt{3000} = 5084$ lb > V_u OK

∴ Shear capacity of 3J1 is adequate.

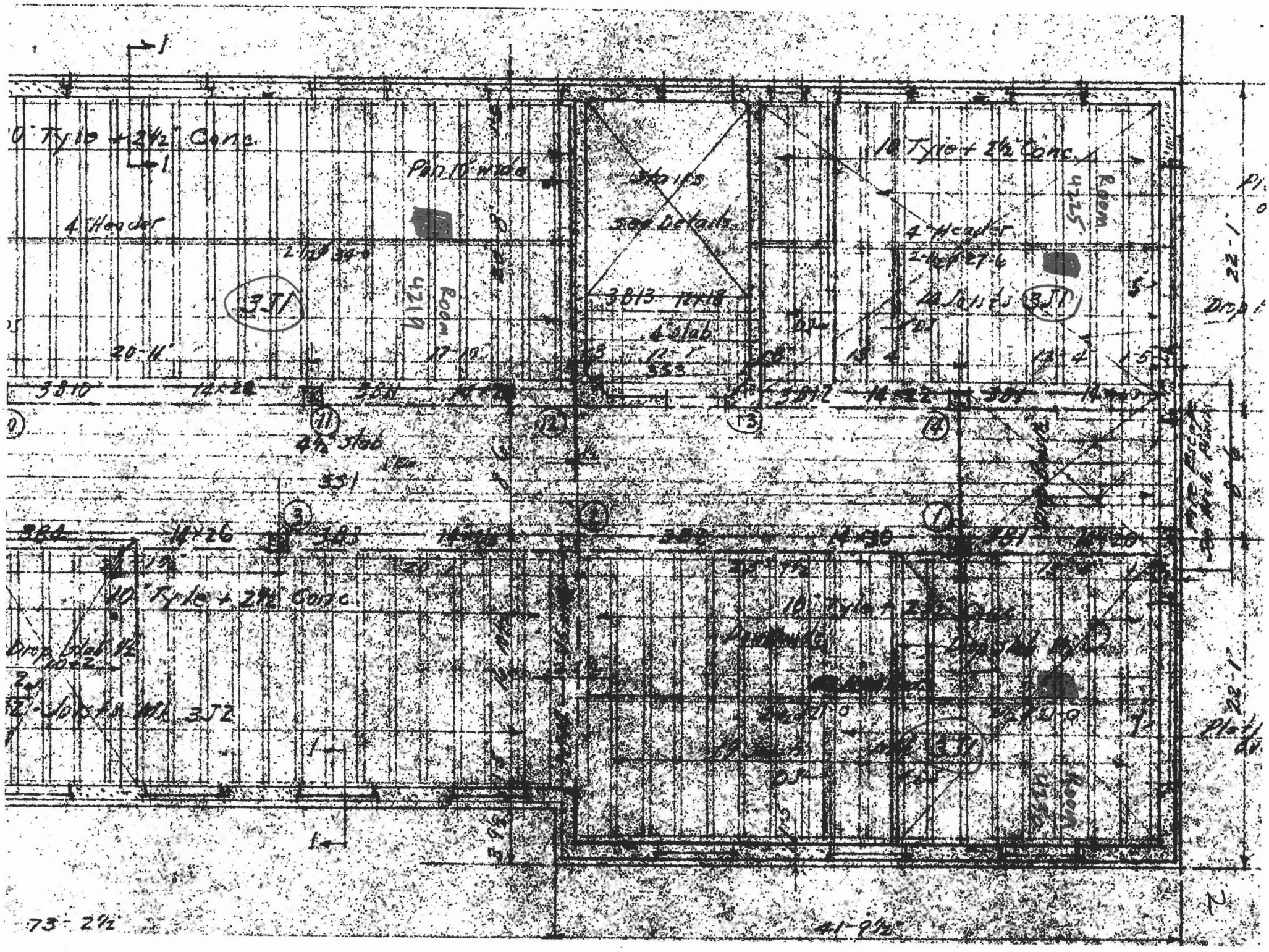

10" Tyle + 2½" Conc.
Pan 10" wide
4" Header
Stairs
See Details
3J1
Room 4219
3B13 12x18
4" slab
20-11"
3B10
14x28
3B11
3B12
14x22
4½" slab
3S1
3B4
14x26
3B3
14x30
3B1
10" Tyle + 2½" Conc.
Drop slab ½
3J2
Room 4225
22-1"
73-2½"
41-9½"

Joist Schedule (3rd Floor)

Joist Mark	Reinforcing Steel Each Joist											
	No	Size	Length	Mark	Hook						Hook	d
3J1	1	1"d	20-10	St								
	1	3/4"d	22-9	630	12"	2-0	1-8	13-5	1-8	2-0	12"	10
3J2	1	7/8"d	17-0	St								
	1	3/4"d	19-0	631	12"	2-0	1-8	9-8	1-8	2-0	12"	10
3J3	1	7/8"d	17-0	St								
	1	3/4"d	20-8	632	12"	2-0	1-8	9-8	1-8	2-0	-	no 8
3J4	1	3/4"d	11-2	St								
	1	5/8"d	12-10	533	10"	1-0	1-8	5-10	1-8	1-0	10"	10

Place 4x12 #9/12 wire mesh in all slabs over Type with main wires across the joists. Carry mesh across the top of adjoining supports. D.J. indicates joists 10½" wide with double joist reinforcing.

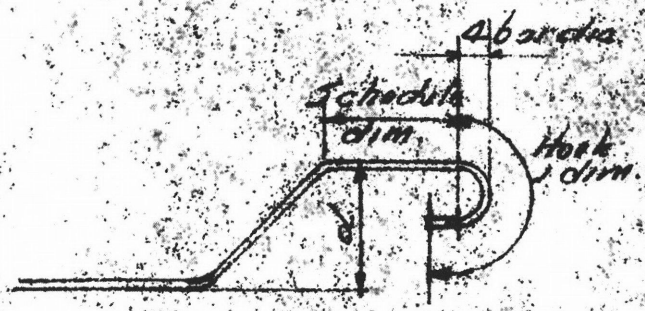

Typical Hook Detail
Unless otherwise indicated.

Solid Slab Schedule (3rd Floor Framing)

Slab Mark	Depth	Reinforcing Steel Each Slab.											
		Size	Length	Mark	Hook						Hook	d	Spacing
3S1	4½"	½"d	10-0	St									Alternate 2½" crs.
		½"d	14-6	430	-	4-0	6	5-6	6	4-0	-	3"	
3S2	4"	3/8"d	6-6	St									Alternate 6" crs.
		3/8"d	9-0	330	-	3-6	5	2-8	5	1-6	6	2½	
3S3	4"	3/8"d	7-0	St									Alternate 6" crs.
		3/8"d	9-6	331	-	4-0	5	2-8	5	1-6	6"	2½	

Place 3/8"d longitudinally with in all solid slabs unless otherwise noted.

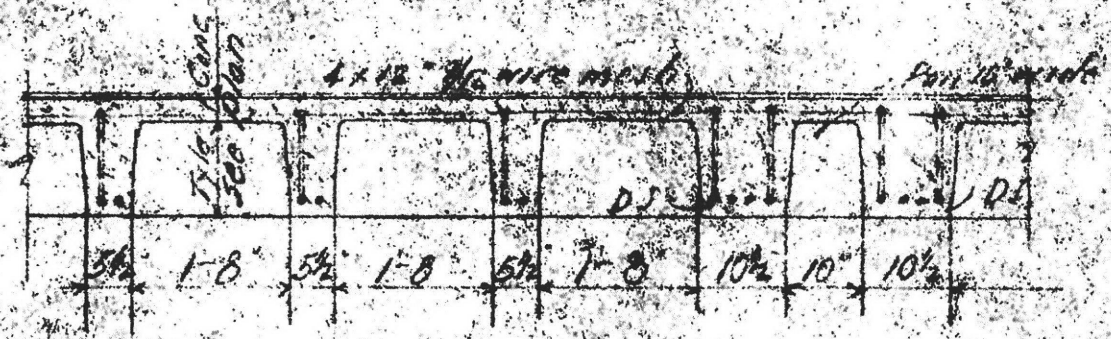

Typical Cross Section
thru Tile Slabs

Seismic force demands on nonstructural elements calculated per ASCE 7-05, Chapter 13

S_{DS} = 0.728 spectral acceleration, short period
h = 63.5 average roof height of structure in feet

$0.2 \times S_{DS}$ = 0.146 **vertical** acceleration, up or down (strength-level) *Section 13.3.1*
$0.7 \times 0.2 \times S_{DS}$ = 0.102 **vertical** acceleration, up or down (service level)

z	ft	component attachment height	
W_p	lbs	component operating weight	
I_p		component importance factor	*Section 13.1.3*
a_p		component amplification factor	*Tables 13.5-1 and 13.6-1*
R_p		component response modification factor	*Tables 13.5-1 and 13.6-1*
F_p	lbs	seismic design force	
		$= 0.4\, a_p\, S_{DS}\, W_p\, (1 + 2\,(z / h))\, /\, (R_p / I_p)$	*eq. 13.3-1*
		$= 1.6\, S_{DS}\, I_p\, W_p$ (upper limit)	*eq. 13.3-2*
		$= 0.3\, S_{DS}\, I_p\, W_p$ (lower limit)	*eq. 13.3-3*

horizontal force demands						**strength-level**		**service-level**	
component	z	W_p	I_p	a_p	R_p		F_p		$0.7 \times F_p$
GE Boom M2	39	758	1.5	2.5	2.5	0.973 x Wp =	738	0.681 x Wp =	516
GE Boom M4	39	921	1.5	2.5	2.5	0.973 x Wp =	896	0.681 x Wp =	628

SEISMIC ANCHORAGE

ELEVATED FLOOR

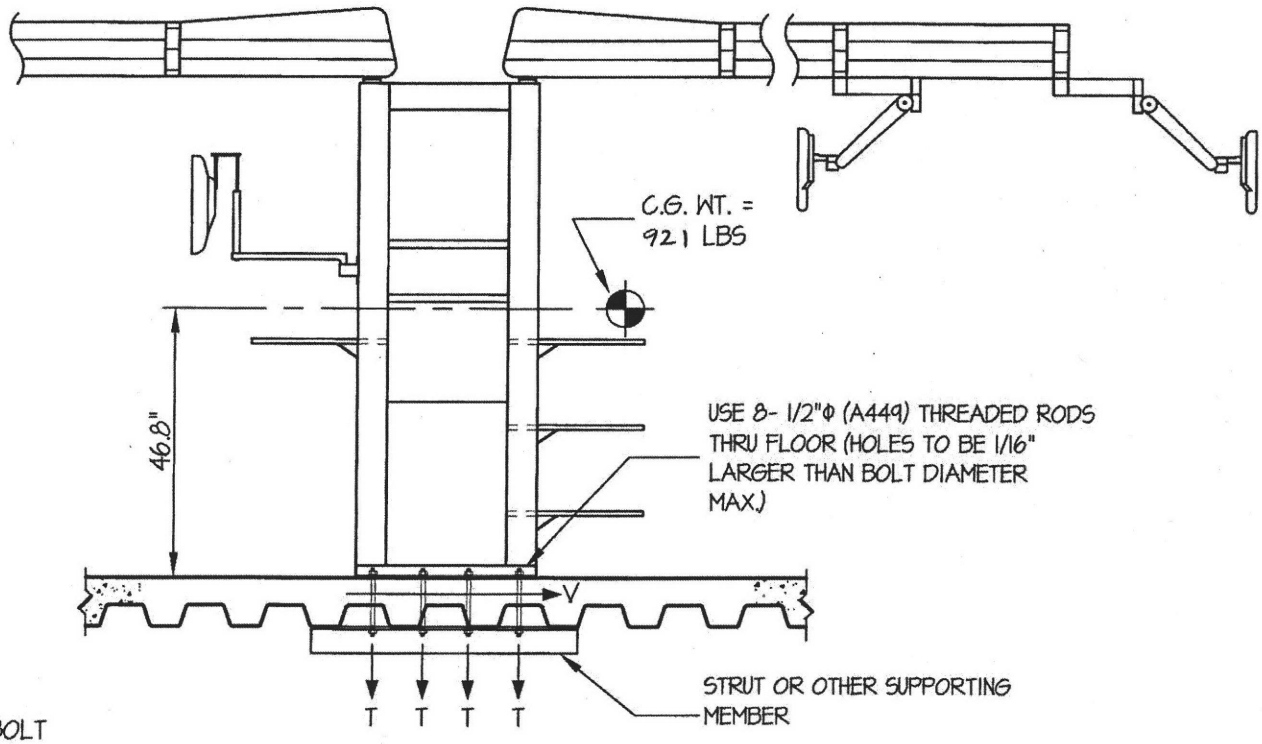

MAX = LBS/BOLT

MAX = LBS/BOLT

ELEVATION

NOTES:

1. FORCES ARE DETERMINED PER
   ASCE 7-05 SECTIONS 12 AND 13. STRENGTH DESIGN IS USED.
   HORIZONTAL FORCE (E_h) = $0.973W_p$ ($S_{DS} = 0.728$ $a_p = 2.5$, $I_p = 1.5$, $R_p = 2.5$)
   VERTICAL FORCE (E_v) = $0.146W_p$
2. CENTER OF GRAVITY (C.G.) WEIGHT IS A MAXIMUM. THIS CALCULATION ENCOMPASSES ALL WEIGHTS UP TO THE MAXIMUM WEIGHT SHOWN.
3. ARCHITECT OR STRUCTURAL ENGINEER OF RECORD SHALL PROVIDE SUPPORT STRUCTURE TO SUPPORT WEIGHTS AND FORCES SHOWN.

SEISMIC ANCHORAGE

ELEVATED FLOOR

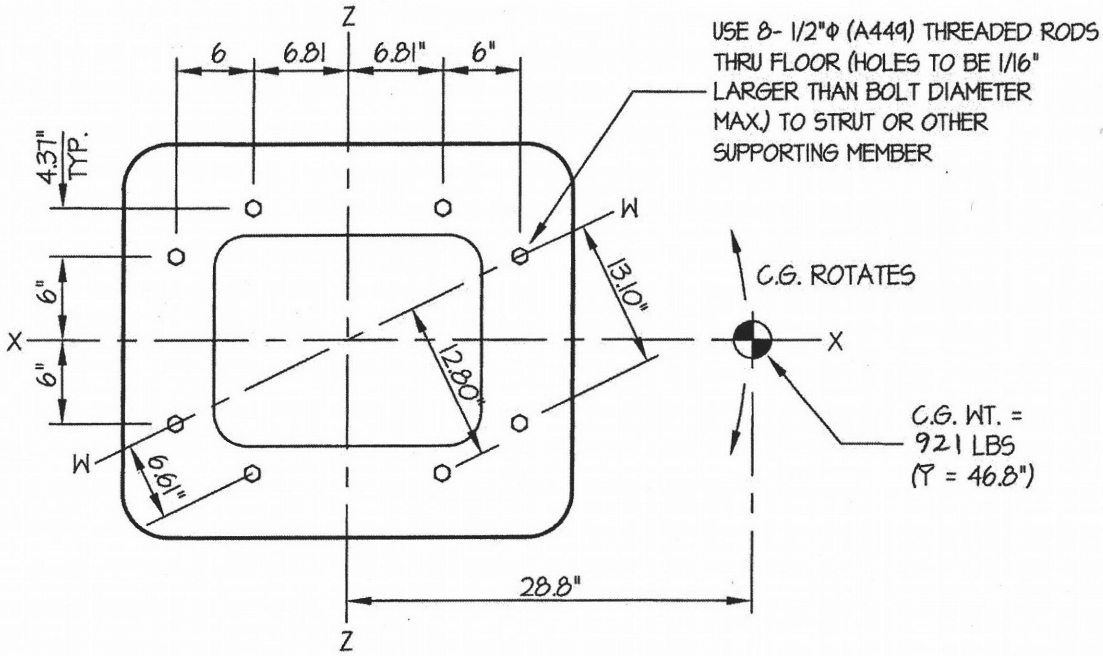

PLAN AT BASE

LOADS:

WEIGHT = 921 LBS

HORIZONTAL FORCE (E_h) = 896 LBS

VERTICAL FORCE (E_v) = 135 LBS

BOLT GROUP PROPERTIES:

$I_{X\text{-}X}$ = 575 in.^{4}

$I_{Z\text{-}Z}$ = 842 in.^{4}

$I_{W\text{-}W}$ = 622 in.^{4}

$I_{Y\text{-}Y}$ = 1416 in.^{4}

MOMENTS:

M_{XX} = 896 #(46.8") + (921# + 135#)28.8" = 72,345#"

M_{ZZ} = 896 #(46.8") + (921# + 135#)28.8" = 72,345#"

M_{WW} = 896 #(46.8") + (921# + 135#)28.8" = 72,345#"

M_{YY} = 896 #(28.8") = 25,805"#

BOLT FORCES:

TENSION (T)

$$T = \frac{72{,}345''\#(13.10'')}{622} - \frac{921\# + 135\#}{8\ \text{BOLTS}} = 1392\ \text{LBS/BOLT (MAX)}$$

BOLT SPEC: 1/2"Φ (A449) THREADED RODS

T_{ALLOW} = 13,200 LBS/BOLT

V_{ALLOW} = 7060 LBS/BOLT

input to Hilti Profis to check expansion anchor capacity

SHEAR (V)

$$V = \frac{896\#}{8\ \text{BOLTS}} + \frac{25805''\#\sqrt{6^2 + 12.81^2}}{1416} = 370\ \text{LBS/BOLT (MAX)}$$ (PER AISC J3.7, LESS THAN 20% STRESS)

Unistrut P1000 spans 20" between joists to resist uplift from bolt

Service-level $M = 0.7(1392\ lb)(20'')/4 = 4872\ lb\cdot in < M_{all} = 5070\ lb\cdot in$

Company:		Page:	1 8
Specifier:		Project:	
Address:		Sub-Project I Pos. No.:	
Phone I Fax:	|	Date:	8/23/2012
E-Mail:			

Specifier's comments:

1 Input data

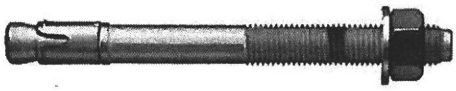

Anchor type and diameter:	**Kwik Bolt TZ - CS 3/8 (2)**
Effective embedment depth:	h_{ef} = 2.000 in., h_{nom} = 2.313 in.
Material:	Carbon Steel
Evaluation Service Report::	ESR 1917
Issued I Valid:	4/1/2012 | 5/1/2013
Proof:	design method ACI 318 / AC193
Stand-off installation:	- (Recommended plate thickness: not calculated)
Profile:	no profile
Base material:	cracked concrete, 3000, f_c' = 3000 psi; h = 4.000 in.
Reinforcement:	tension: condition B, shear: condition B; no supplemental splitting reinforcement present edge reinforcement: none or < No. 4 bar
Seismic loads (cat. C, D, E, or F)	no

Geometry [in.] & Loading [lb, in.lb]

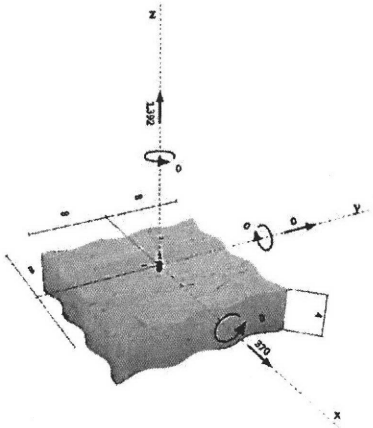

2 Proof I Utilization (Governing Cases)

		Design values [lb]		Utilization	
Loading	**Proof**	**Load**	**Capacity**	**β_N / β_V [%]**	**Status**
Tension	Pullout Strength	1392	1616	87 / -	OK
Shear	Pryout Strength	370	1844	- / 21	OK

Loading	**β_N**	**β_V**	**ζ**	**Utilization $\beta_{N,V}$ [%]**	**Status**
Combined tension and shear loads	0.861	0.201	5/3	85	OK

3 Warnings

- Please consider all details and hints/warnings given in the detailed report!

Fastening meets the design criteria!

PROFIS Anchor (c) 2003-2009 Hilti AG, FL-9494 Schaan Hilti is a registered Trademark of Hilti AG, Schaan