STRUCTURAL CALCULATIONS

for

Michaels' Precast Concrete
Boring, Oregon

Project:
Precast Veneer Anchorage
Legacy Emanuel Children's Hospital
Parking Garage
Portland, Oregon

Project No. 208124
December 4, 2008

I hereby certify that these calculations were performed by me or under my direct supervision and that I am a duly Registered Professional Structural Engineer under the laws of the State of Oregon

David A. Bugni, P.E., S.E.

STRUCTURAL REGISTERED PROFESSIONAL ENGINEER 15065 OREGON JULY 25, 1990 DAVID A. BUGNI

EXPIRES 12-31-09

DAVID BUGNI & ASSOCIATES
Consulting Structural Engineers
30265 S.E. Kowall Road
Estacada, OR 97023
(503) 630-3506; Fax (503) 630-3507

08.137608.DFS.03.CO

12/04/2008 18:28 5036303507 D BUGNI ASSOC PAGE 09

HOFFMAN CONSTRUCTION COMPANY

This submittal has been reviewed for general conformance with the contract documents. Contractor's review does not relieve the Vendor/Subcontractor of responsibility for compliance with all requirements of the contract, including completeness and accuracy of this submittal.

DEC 29 2008 034500-02

Date Submittal #

JASON HASLAM

X REVIEWED ☐ MAKE CORRECTIONS NOTED

☐ REJECTED ☐ REVISE AND RESUBMIT

REVIEW DOES NOT RELIEVE CONTRACTOR FROM COMPLIANCE WITH THE REQUIREMENTS OF THE DRAWINGS AND SPECIFICATIONS. THIS REVIEW IS ONLY FOR GENERAL CONFORMANCE WITH THE DESIGN CONCEPT OF THE PROJECT AND GENERAL COMPLIANCE WITH THE INFORMATION GIVEN IN THE CONTRACT DOCUMENTS. CONTRACTOR RESPONSIBLE FOR CONFIRMING AND CORRELATING ALL QUANTITIES AND DIMENSIONS, SELECTING FABRICATION PROCESSES AND TECHNIQUES OF CONSTRUCTION, COORDINATING THEIR WORK WITH ALL OTHER TRADES, AND PERFORMING THEIR WORK IN A SAFE AND SATISFACTORY MANNER.

01/15/09 JMA

CATENA CONSULTING ENGINEERS BY

DAVID BUGNI
& ASSOCIATES
Consulting Structural Engineers
30265 S.E. Kowall Road
Estacada, OR 97023
(503) 630-3506
Fax: (503) 630-3507

CLIENT: MICHAELS
PROJECT: EMANUEL
CALCULATED BY: DB DATE: 12/3/08
CHECKED BY: DATE:

Sheet S-1
Project No. 208124

PRECAST CONCRETE
FIN ANCHORAGE

FROM G-S0.01 (5/5/08)

SEISMIC: $S_{DS} = 1.05g$ $I = 1.0$
· 1 7/8" INTERSTORY DRIFT (MAX.)

WIND: 94.5 mph, EXP. C $I = 1.0$

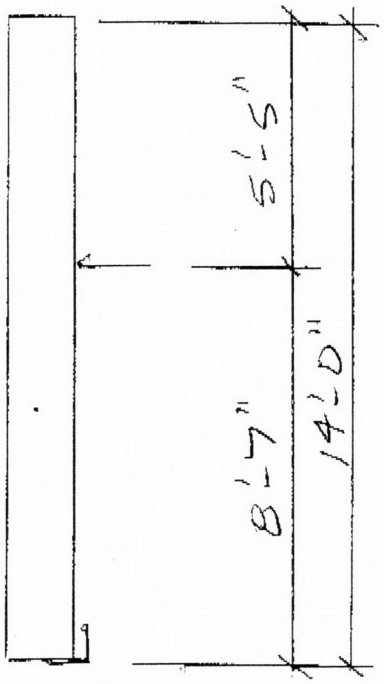

TYP
G-A3.11

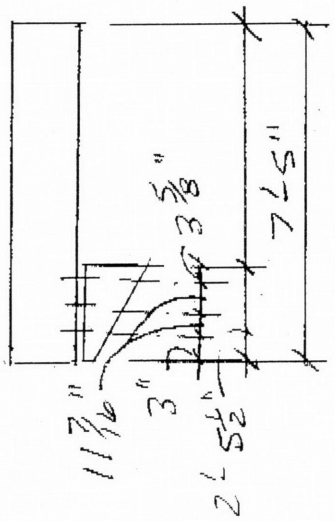

OVER CAR EXIT

G-A3.11

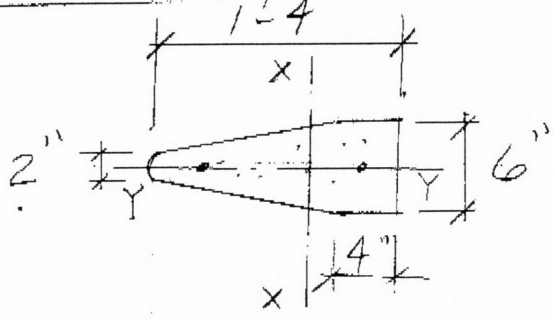

DAVID BUGNI
& ASSOCIATES
Consulting Structural Engineers
30265 S.E. Kowall Road
Estacada, OR 97023
(503) 630-3506
Fax: (503) 630-3507

CLIENT: MICHAELS
PROJECT: EMANUEL
CALCULATED BY: DB DATE: 12/8/08
CHECKED BY: _____ DATE: _____

Sheet S-2
Project No. 208124

$$F_{pu} = \frac{0.4 a_p S_{DS} W_p}{R_p / I_p}\left[1 + 2\left(\frac{h_x}{h_c}\right)\right]$$

$a_p = 1.0$
1.25 (CONNS)

$R_p = 2.5$
1.0 (CONNS)

$$F_{pu} = \frac{0.4(1)(1.05)W_p[1+2(1)]}{2.5/1.0}$$

$= 0.504 W_p$ (PNL)

$= 1.58 W_p$ (CONNS)

$$\text{PNL WT} \approx \left\{\frac{6''(4'') + \frac{1}{2}(2''+6'')(12'')}{144}\right\}(14')(150)$$

$= 1050^{\#}$ (75 #/')

BY INSPECTION, SEISMIC CONTROLS E.W.

FOR FIN. REINF.,

$f_{pu} = 0.504 *$
75 PLF
$= 37.8$ PLF
(FOR PNL DESIGN)

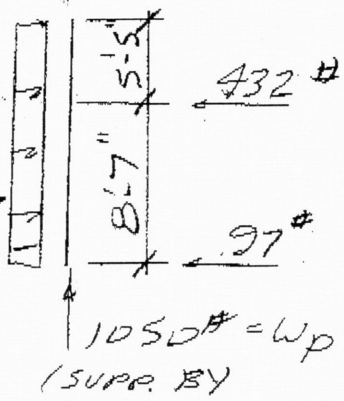

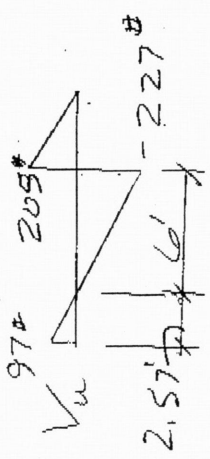

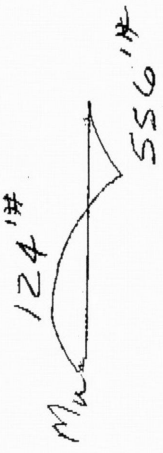

DAVID BUGNI
& ASSOCIATES
Consulting Structural Engineers
30265 S.E. Kowall Road
Estacada, OR 97023
(503) 630-3506
Fax: (503) 630-3507

CLIENT: MICHAELS
PROJECT: EMANUEL
CALCULATED BY: DB DATE: 12/3/08
CHECKED BY: DATE:

Sheet S-3
Project No. 208124

CRITICAL AXIS IS ABOUT Y-Y (S-1) FOR BENDING:

AVG $d \approx 2''$

$$\therefore A_{s_R} \approx \frac{556(12)}{0.9(60{,}000)(0.9)(2'')} = 0.07 \text{ in}^2$$

USE (2) - #4 $A_s = 0.4 \text{ in}^2$

CHECK CRACKING,
ROUGHLY

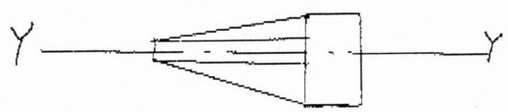

$$I_Y \approx \frac{4(6)^3}{12} + \frac{12(2)^3}{12} + \frac{2(12)(2)^3}{36} + 2\left(\tfrac{1}{2}\right)(12)(2)(1.67)^2 = 152 \text{ in}^4$$

$$S_Y = \frac{152 \text{ in}^4}{3} = 50.8 \text{ in}^3$$

$$M_{cr} = 7.5\frac{\sqrt{5000}}{12}(50.8 \text{ in}^3) = 2243'^{\#} > M_u(556'^{\#})$$

$\therefore$ CRACKING SHOULD NOT OCCUR.

$$A_{s_{MIN}} = 0.0018(72 \text{ in}^2) = 0.13 \text{ in}^2$$

(2) - #4 O.K.

DAVID BUGNI
& ASSOCIATES
Consulting Structural Engineers
30265 S.E. Kowall Road
Estacada, OR 97023
(503) 630-3506
Fax: (503) 630-3507

CLIENT: MICHAELS
PROJECT: EMANUEL
CALCULATED BY: DB DATE: 12/4/08
CHECKED BY: DATE:

Sheet S-4
Project No. 208124

DESIGN OF BRG CONN. BY OTHERS.
USE BRG CONN. TO BE PINNED TO ALLOW FIN TO ROCK AS TOP CONN. DRIFTS.

∴ DESIGN BOTTOM CONN. TO ACCOMMODATE DRIFTS

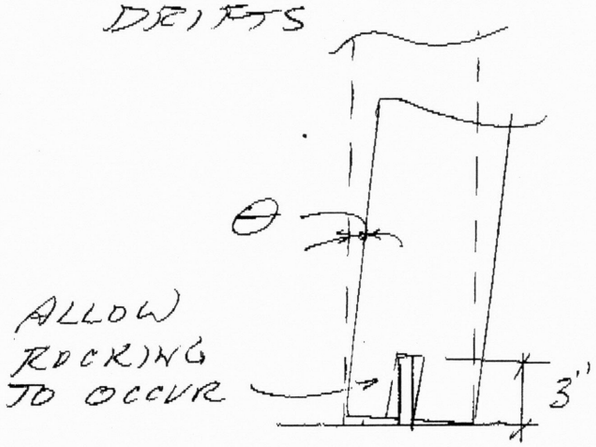

STORY HT = 103"
STORY DRIFT = 1 7/8"

BY SIMILAR TRIANGLES,

$$\frac{3''}{103''} = \frac{X}{1.875''}$$

∴ X = 0.055"

IF USING 3/4" φ PIN, PROVIDE SLEEVE W/ AN INSIDE φ =
0.75" + 2(0.055") = 0.86" (MIN.)

SK-1 → USE 1" EXTRA-STRONG PIPE SLEEVE (I.D. = 0.957") O.K.

SHIM FIT TO PROVIDE A TIGHT FIT UNDER NORMAL SERVICE LOADS AND PREVENT TORSIONAL ROTATION.

DAVID BUGNI
& ASSOCIATES
Consulting Structural Engineers
30265 S.E. Kowall Road
Estacada, OR 97023
(503) 630-3506
Fax: (503) 630-3507

CLIENT: MICHAELS
PROJECT: EMANUEL
CALCULATED BY: DB DATE: 12/4/08
CHECKED BY: DATE:

Sheet S-5
Project No. 208124

CHECK ANCHORAGE @ TOR

$T_u = 432^{\#}(3.125) = 1350^{\#}$

TRY 3/4"ϕ x 4" EMB. BOLT,

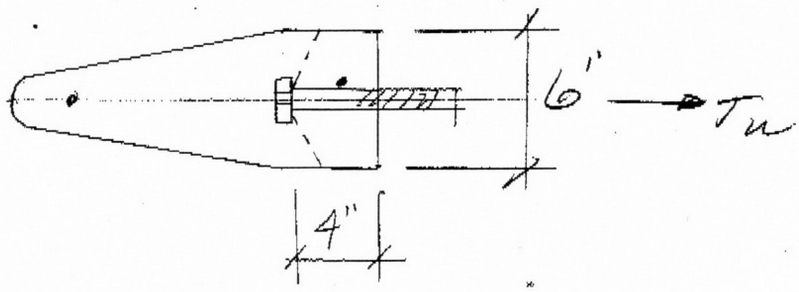

$N_{cb} = \frac{A_{Nc}}{A_{Nco}} \psi_{ed}, \psi_c, \psi_{cp} N_b$

$A_{Nco} = 9(4")^2 = 144 \text{ in}^2$

$N_b = 24\sqrt{5000}(4)^{1.5} = 13,576^{\#}$

$A_{Nc} = (2)(1.5)(4")(6") = 72 \text{ in}^2$

$\psi_{ec} = 1.0$

$\psi_{ed} = 0.7 + 0.3\frac{(3")}{1.5(4")} = 0.85$

$\psi_c = 1.25 \qquad \psi_{cp} = 1.0$

$\therefore N_{cb} = \frac{72}{144}(1.25)(0.85)(1.0)(13,576^{\#})$

$= 7212^{\#}$

DAVID BUGNI
& ASSOCIATES
Consulting Structural Engineers
30265 S.E. Kowall Road
Estacada, OR 97023
(503) 630-3506
Fax: (503) 630-3507

CLIENT: MICHAELS
PROJECT: EMANUEL
CALCULATED BY: DB DATE: 12/4/08
CHECKED BY: DATE:

Sheet S-6
Project No. 208124

$$0.75\phi N_{cb} = 0.75(0.7)(7212\#)$$
$$= 3784\# > 1350\# \text{ (O.K.)}$$

CHECK IN-PLANE SHEAR,

$$V_{cb} = \frac{A_{Vc}}{A_{Vco}} \psi_{ed} \psi_c V_b$$

$$A_{Vco} = 4.5(3")^2 = 40.5 \text{ in}^2$$

$1.5(3") = 4.5"$

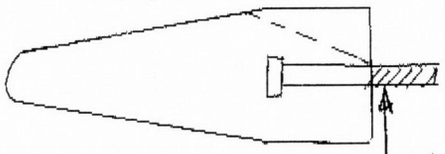

$V_u = 1350\#$

$$A_{Vc} = 1.5(3")2(1.5)(3") = 40.5 \text{ in}^2$$

$$V_b = 7\left(\frac{l_e}{d_o}\right)^{0.2}\sqrt{d_o}\sqrt{f'_c}(c_{a1})^{1.5}$$

$$= 7\left[\frac{4"}{0.75}\right]^{0.2}\sqrt{0.75}\sqrt{5000}(3")^{1.5}$$

$$= 3113\#$$

$\psi_{ec} = 1 \quad \psi_{ed} = 1.0 \quad \psi_c = 1.4$

$$\therefore V_{cb} = \frac{40.5}{40.5}(1)(1)(1.4)(3113\#) = 4358\#$$

$$0.75\phi V_{cb} = 0.75(0.70)(4358\#)$$
$$= 2288\# > 1350\# \text{ (O.K.)}$$

DAVID BUGNI
& ASSOCIATES
Consulting Structural Engineers
30265 S.E. Kowall Road
Estacada, OR 97023
(503) 630-3506
Fax: (503) 630-3507

CLIENT: MICHAELS
PROJECT: EMANUEL
CALCULATED BY: DB DATE: 12/4/08
CHECKED BY: DATE:

Sheet S-7
Project No. 208124

SK-2 ∴ TRY 3/4" ϕ x 4" EMB. BOLT

PLACE IN VERT. SLOTTED HOLE FOR DEFLECTION & ERECTION TOLERANCE. ASSUME 3/4" MAX. LL DEFLECTION. SEE S-12 FOR ADDIT. ANALYSIS.

SK-3

$f_{pu} = 37.8/(3.125)$
$= 118$ PLF

$@\ a_p = 1.25$,
$R_p = 1.0$

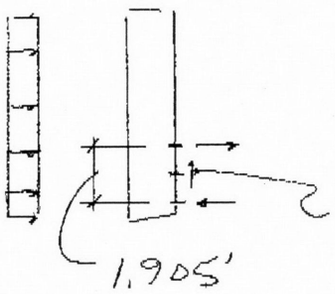

PANEL FLEXURAL REINF SAME AS BEFORE. CHECK CONNS.

$V = 75\ PLF(7.42') = 556^{\#}$

(USE 3/4" ϕ F-42,
$V_a = 1990^{\#}$ (O.K.)

$$R_{u\,TOP} = \frac{118(7.17')^2/2}{1.905'} = 1592^{\#}$$

$$R_{u\,BOT} = 118(7.17') - 1592 = -746^{\#}$$

FROM DAYTON-SUPERIOR CATALOG, ESTIMATE ULTIMATE CAPACITY OF 3/4" F-42, $T_n = 3(2200^{\#}) = 6600^{\#}$

REDUCE PER APP. D & FOLLOWING S-5,

$A_{Nco} = 9(3.5")^2 = 110\ in^2$

$A_{Ne} = 2(1.5)(3.5")(6") = 63\ in^2$

$\psi_{ec} = 1.0 \quad \psi_{ed} = 0.7 + \frac{0.3(3")}{1.5(3.5")} = 0.87$

DAVID BUGNI
& ASSOCIATES
Consulting Structural Engineers
30265 S.E. Kowall Road
Estacada, OR 97023
(503) 630-3506
Fax: (503) 630-3507

CLIENT: MICHAELS
PROJECT: EMANUEL
CALCULATED BY: DB DATE: 12/4/08
CHECKED BY: DATE:

Sheet S-8
Project No. 208124

$\psi_c = 1.25 \quad \psi_{cp} = 1.0$

$\therefore N_{cb} = \frac{63}{110}(1.25)(0.87)(1)(6600^{\#})$

$= 4110^{\#}$

$0.75\phi N_{cb} = 0.75(0.75)(4110^{\#})$

$= 2312^{\#} > 1592^{\#}$ (O.K.)

CHECK SHEAR CAPACITY,

$V_n \leq 3(1990^{\#}) = 5970^{\#}$

$V_b = 7\left(\frac{3.5}{0.75}\right)^{0.2}\sqrt{0.75}\sqrt{5000}\,(3'')^{1.5}$

$= 3031^{\#}$

$\therefore 0.75(0.75)(3031^{\#}) = 1705^{\#} > 1592^{\#}$

HOWEVER, FOR IN-PLANE LOADS, MUST CONSIDER THE FOLLOWING,

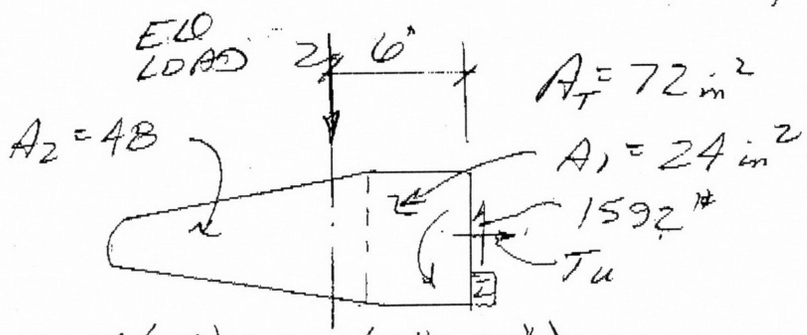

$\bar{X} = \frac{24(2'') + 48(4'' + \frac{12''}{3})}{72} = 6''$

CONSTRUCT SAP WIREFRAME MODEL TO ESTIMATE INTERACTION

SAP2000

12/4/08 7:53:40

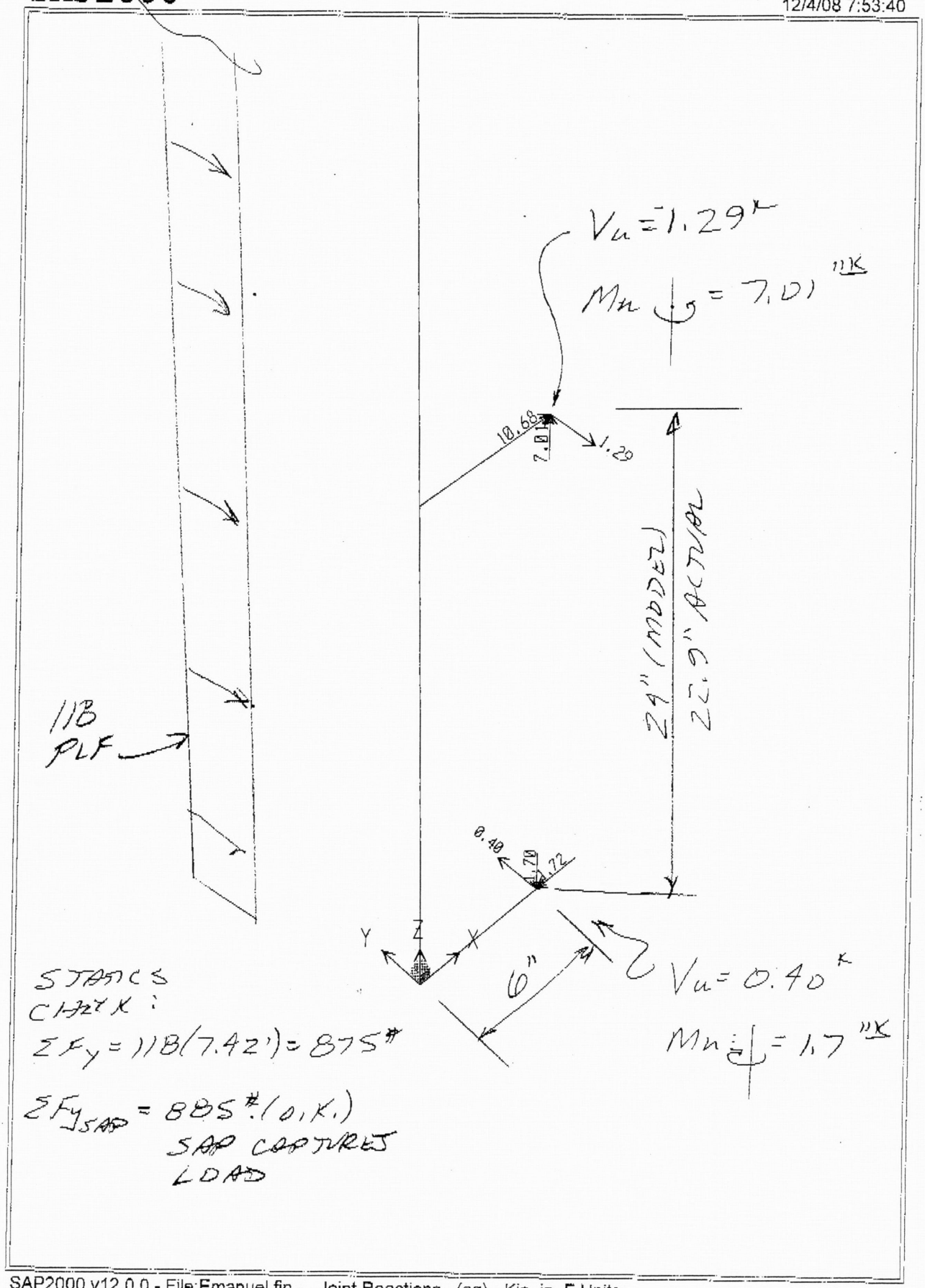

STATICS CHECK:

$\Sigma F_y = 118(7.42') = 875^{\#}$

$\Sigma F_{y_{SAP}} = 885^{\#}$ (O.K.)
SAP CAPTURES LOAD

SAP2000 v12.0.0 - File:Emanuel fin - Joint Reactions (eq) - Kip, in, F Units

DAVID BUGNI
& ASSOCIATES
Consulting Structural Engineers
30265 S.E. Kowall Road
Estacada, OR 97023
(503) 630-3506
Fax: (503) 630-3507

CLIENT: MICHAELS
PROJECT: EMMANUEL
CALCULATED BY: DB DATE: 12/4/08
CHECKED BY: DATE:

Sheet S-10
Project No. 208124

RESOLVING M_u INTO A COUPLE,

$$T_u \approx \frac{7010''^{\#}}{0.9(3'')} = 2596^{\#}$$

THIS MUST BE COMBINED W/

$V_u = 1290^{\#}$ HOWEVER,

FROM S-8, WE KNOW TENSION CAPACITY ABOUT $2312^{\#} < 2596^{\#}$ (N.G.)

TRY MORE ROBUST INSERT,

TRY 3/4" F-64 x 6 1/8",

$$T_n \approx 3(5{,}000^{\#}) = 15{,}000^{\#}$$

$$A_{Nco} = 9(6.125'')^2 = 338\ in^2$$

$$A_{Nc} = 2(1.5)(6.125'')(6'') = 110\ in^2$$

$$\psi_{ed} = 0.7 + \frac{0.3(3'')}{1.5(6.125'')} = 0.80$$

$$\therefore N_{cb} = \frac{110}{338}(1.25)(0.80)(1)(15{,}000)$$

$$= 4882^{\#}$$

$$0.75(0.75)(4882) = 2746^{\#}$$

ESTIMATE SHEAR CAPACITY,

$$V_n \leq 3(3000) = 9{,}000^{\#}$$

$$V_b = 7\left(\frac{6''}{0.75}\right)^{0.2}\sqrt{0.75}\sqrt{5000}(3'')^{1.5}$$

$$V_b = 3376^{\#}$$

DAVID BUGNI
& ASSOCIATES
Consulting Structural Engineers
30265 S.E. Kowall Road
Estacada, OR 97023
(503) 630-3506
Fax: (503) 630-3507

CLIENT: MICHAELS
PROJECT: EMANUEL
CALCULATED BY: DB DATE: 12/4/08
CHECKED BY: DATE:

Sheet S-11
Project No. 2DB124

$0.75\phi V_b = 0.75(0.75)(3376^{\#}) = 1899^{\#}$

THIS IS NOT ADEQUATE. TRY ANOTHER IDEA.

USE THE FOLLOWING DEZO ANCHOR,

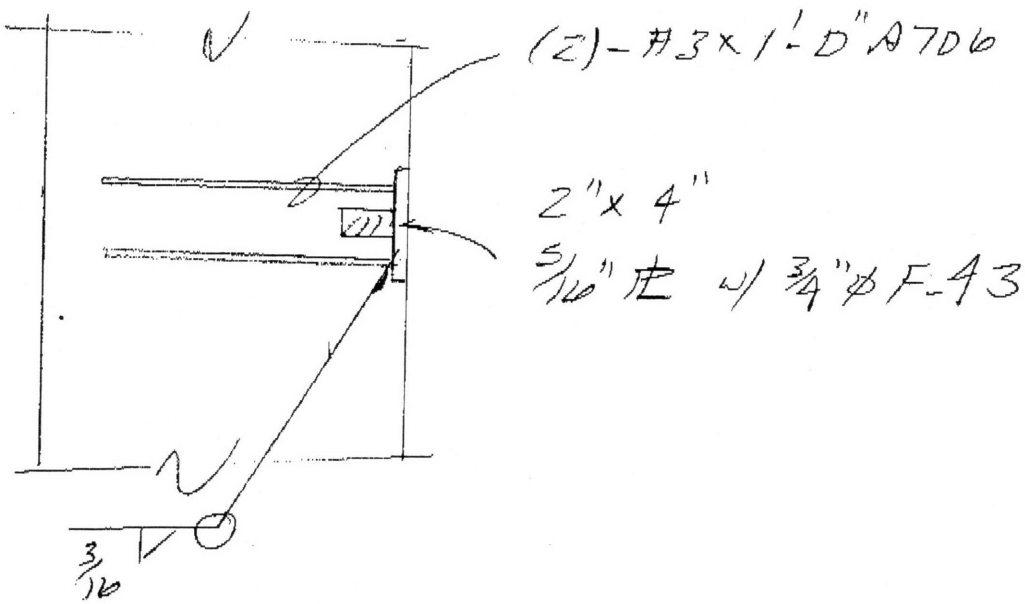

TENSION RESISTED BY REBAR (O.K. BY INSPECTION) & SHEAR RESISTED BY F-43/BOLT:

$$V_b = 7\left(\frac{1.625}{0.75}\right)^{0.2}(\sqrt{0.75})\sqrt{5000}(3")^{1.5}$$
$$= 2600^{\#}$$

$0.75(0.75)(2600) = 1462^{\#} > 1290^{\#}$ (O.K.)

NOTE: REBAR ALSO CONTRIBUTES TO SHEAR RESISTANCE BY SHEAR FRICTION, BUT IGNORE FOR CONSERVATISM.

DAVID BUGNI
& ASSOCIATES
Consulting Structural Engineers
30265 S.E. Kowall Road
Estacada, OR 97023
(503) 630-3506
Fax: (503) 630-3507

CLIENT: MICHAELS
PROJECT: EMANUEL
CALCULATED BY: DB DATE: 12/4/08
CHECKED BY: DATE:

Sheet S-12
Project No. 208124

FOLLOWING SAME PROCEDURE, CHECK SUITABILITY OF SK-1 & SK-2 FOR IN-PLANE SHEARS ON CONNECTIONS,

SK-2

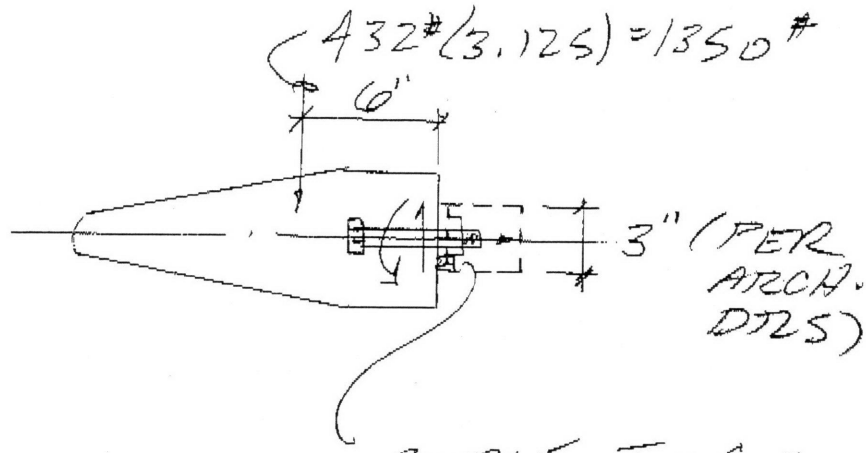

COUPLE $T_u = C_u =$

$$\frac{1350^{\#}(6'')}{0.85(1.5'')} = 6352^{\#}$$

FROM S-5 & S-6,

$T_u > 0.75 \phi N_{cb}$ (N.G.)

INCREASE CLIP & WIDTH TO 5",

$$T_u = C_u = \frac{1350(6'')}{0.85(2.5'')} = 3812^{\#} \text{ (N.G.)}$$

TRY INCREASING BOLT DEPTH TO 6",

$A_{Nco} = 9(6'')^2 = 324 \text{ in}^2$

$N_b = 24\sqrt{5000}\,(6)^{1.5} = 24{,}942^{\#}$

DAVID BUGNI
& ASSOCIATES
Consulting Structural Engineers
30265 S.E. Kowall Road
Estacada, OR 97023
(503) 630-3506
Fax: (503) 630-3507

CLIENT: MICHAELS
PROJECT: EMANUEL
CALCULATED BY: DB DATE: 12/4/08
CHECKED BY: DATE:

Sheet 5-13
Project No. 208124

$A_{Nc} = 2(1.5)(6")(6") = 108 in^2$

$\psi_{ec} = 1.0 \quad \psi_{ed} = 0.7 + \frac{0.3(3")}{1.5(6")} = 0.80$

$\psi_c = 1.25 \quad \psi_{cp} = 1.0$

$N_{cb} = \frac{108}{324}(1.25)(0.8)(1.0)(24{,}942\#)$

$= 8314\#$

CASE A

$0.75\phi N_{cb} = 0.75(0.75)(8314\#)$

$0.75\phi N_{cb} = 4677\#$

$V_b = 7\left(\frac{6"}{0.75}\right)^{0.2}\sqrt{0.75}\sqrt{5000}(3")^{1.5}$

$= 3376\#$

$V_{cb} = \frac{40.5}{40.5}(1)(1)(1.4)(3376\#) = 4726\#$

$0.75\phi V_{cb} = 0.75(0.75)(4726\#)$

$0.75\phi V_{cb} = 2659\#$

$\therefore \frac{3812\#}{4677\#} + \frac{1350\#}{2659\#} = 1.31 > 1.20$

5K-2 → WOULD THIS INTERACTION TO BE ACCEPTABLE CONSIDERING HOW LOADS AMPLIFIED (BY 3.125) & HOW CAPACITIES REDUCED (0.75 * 0.75)

CLIP ANGLE TO BE 5" WIDE

DAVID BUGNI
& ASSOCIATES
Consulting Structural Engineers
30265 S.E. Kowall Road
Estacada, OR 97023
(503) 630-3506
Fax: (503) 630-3507

CLIENT: MICHAELS
PROJECT: EMANUEL
CALCULATED BY: DB DATE: 12/4/08
CHECKED BY: DATE:

Sheet S-14
Project No. 208124

SK-1

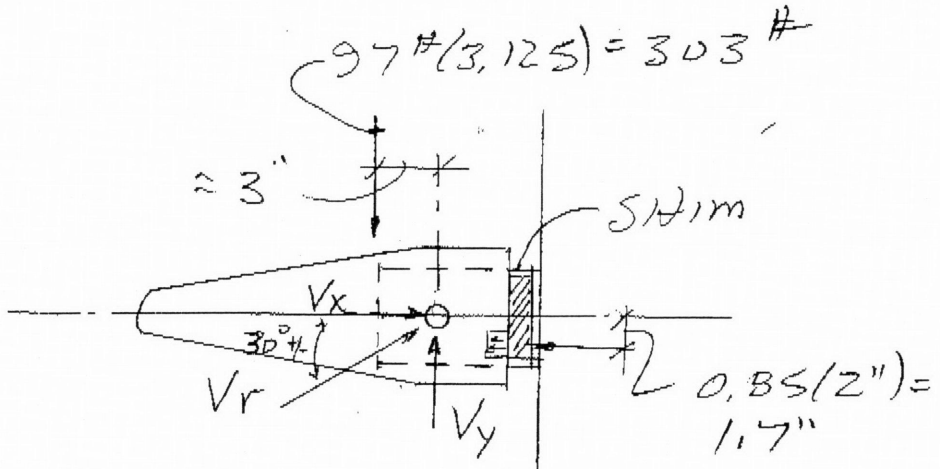

$V_y = 303^{\#}$

$V_x = \frac{303^{\#}(3")}{1.7"} = 535^{\#}$

$V_r = \sqrt{(303)^2 + (535)^2} = 615^{\#}$

EXPAND VIEW TO DETERMINE FAILURE SURFACE:

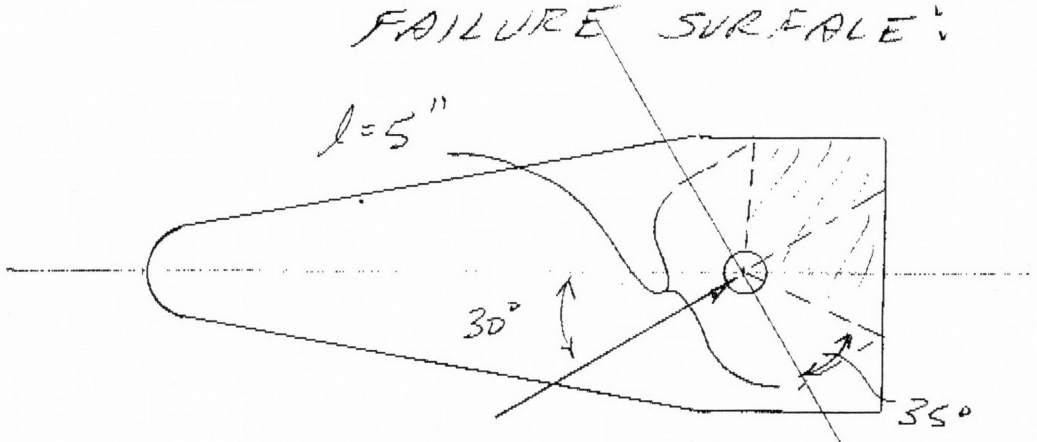

$A_{Vco} = 4.5(4")^2 = 72 in^2$

$A_{Vc} = 1.5(4")(5") = 30 in^2$

$V_b = 7\left(\frac{4"}{1"}\right)^{0.2}\sqrt{1}\,\sqrt{5000}\,(4")^{1.5}$

$= 7920^{\#}$

DAVID BUGNI
& ASSOCIATES
Consulting Structural Engineers
30265 S.E. Kowall Road
Estacada, OR 97023
(503) 630-3506
Fax: (503) 630-3507

CLIENT: MICHAELS
PROJECT: EMANUEL
CALCULATED BY: DB DATE: 12/4/08
CHECKED BY: DATE:

Sheet S-15
Project No. 208124

$\psi_{ec} = 1$ $\psi_{ed} = 1.0$ $\psi_c = 1.4$

$V_{cb} = \frac{30}{72}(1)(1)(1.4)(7920^{\#}) = 4620^{\#}$

$0.75\phi V_b = 0.75(0.70)(4620^{\#})$
$= 2426^{\#} > 615^{\#}$ (O.K.)

∴ BOT. CONN. O.K. TO RESIST IN-PLANE SHEAR & ITS ASSOCIATED EFFECTS

NC Threaded Inserts

For Suspending, Connecting
and Anchoring to Concrete

DAYTON SUPERIOR

F-5 Threaded Insert

The Dayton Superior F-5 Threaded Inserts have National Course (NC) threads and are recommended for use under permanent loading conditions. This insert has been approved by the Board of Standards and Appeals for use in New York City under Calendar No. 447-60SM.

The F-5 insert is cast from ductile iron that meets ASTM A-395, Grade 60-40-18.

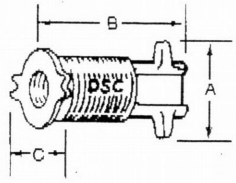

F-5
Threaded Insert

To Order:
Specify: (1) quantity, (2) name, (3) bolt diameter.

Example:
200, F-5 Threaded Inserts, 3/4" bolt diameter.

F-5 Threaded Insert Selection Chart					
Bolt Diameter and Threads per Inch	Tension Safe Working Load	Bolt Engagement	A	B	C
1/2" – 13	1,500 lbs.	15/16"	1-5/8"	2-1/2"	1-5/8"
5/8" – 11	2,000 lbs.	3/4"	1-5/8"	3"	1-5/8"
3/4" – 10	2,500 lbs.	7/8"	1-13/16"	3"	1-7/8"
7/8" – 9	3,000 lbs.	1-5/16"	2-1/2"	3-3/8"	2-5/8"
1" – 8	3,000 lbs.	1-5/16"	2-1/2"	3-3/8"	2-5/8"

Safe Working Load provides a factor of safety of approximately 3 to 1 when the insert is properly embedded in 3,000 psi normal weight concrete.

F-42 Loop Ferrule Insert

The Dayton Superior F-42 Loop Ferrule Insert is fabricated by welding a looped strut to a closed-end ferrule. F-42 insert is available in the sizes shown in the chart below and is well suited for structural connections and the suspension of equipment, piping, etc.

Minimum spacing between inserts is twice the minimum corner distance.

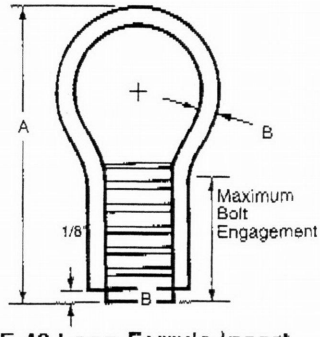

F-42 Loop Ferrule Insert

To Order:
Specify: (1) quantity, (2) name, (3) bolt diameter.

Example:
200, F-42 Loop Ferrule Inserts, 3/4" bolt diameter.

F-42 Loop Ferrule Insert Selection Chart							
Bolt Diameter and Threads per Inch	Minimum Edge Distance	Minimum Corner Distance	Safe Working Load Tension	Safe Working Load Shear	Maximum Bolt Engagement	A	B
1/4" – 20 NC	5"	5"	650 lbs.	650 lbs.	3/4"	2-3/4"	0.243"
3/8" – 16 NC	5"	5"	2,000 lbs.	1,260 lbs.	3/4"	2-3/4"	0.243"
	10"	15"	2,000 lbs.	2,000 lbs.			
1/2" – 13 NC	5"	5"	2,000 lbs.	1,280 lbs.	1"	2-3/4"	0.243"
	7"	10"	2,000 lbs.	2,000 lbs.			
5/8" – 11 NC	5"	7"	2,200 lbs.	1,990 lbs.	1-1/8"	3-1/2"	0.258"
	8"	8"	2,200 lbs.	2,200 lbs.			
3/4" – 10 NC	5"	7"	2,200 lbs.	1,990 lbs.	1-1/8"	3-1/2"	0.258"
	8"	8"	2,200 lbs.	2,200 lbs.			
7/8" – 9 NC	8"	8"	5,300 lbs.	4,060 lbs.	1-1/8"	6"	0.375"
	10"	15"	5,300 lbs.	5,300 lbs.			
1" – 8 NC	8"	8"	5,300 lbs.	4,060 lbs.	1-1/8"	6"	0.375"
	10"	15"	5,300 lbs.	5,300 lbs.			

Safe Working Load provides a factor of safety of approximately 3 to 1 in 3,000 psi normal weight concrete.
Safe Working Loads are based on 1/2" setback from face of concrete.

07/07

12/04/2008 18:28 5036303507 D BUGNI ASSOC PAGE 25

F-43 Plain Ferrule

The Dayton Superior F-43 Plain Ferrule (without loops) can be furnished for fabricating special inserts at the job site. Ferrules are manufactured from either 12L1K cold drawn carbon steel or Type 304 Stainless Steel. Contact your local welding service for proper welding techniques and instructions on welding either of these materials.

When ferrules are produced from Type 304 stainless steel, they will have a knurled rib, as shown. Ferrules that do not have any knurling are produced from 12L1K steel.

Minimum bolt engagement for ferrule inserts shall be equal to the nominal bolt diameter plus 1/8". The use of shorter bolt engagements will result in a lower than expected load carrying capacity.

All of the ferrules and ferrule inserts listed in this handbook are tapped with National Course (NC) threads. Dayton Superior can furnish, on special order, ferrules that are tapped with metric threads.

Note: All ferrules are made with a knock-out area in the closed bottom. When knocked out, the hole will accept a #8-32 self tapping screw that is used to attach ferrule inserts to the form face.

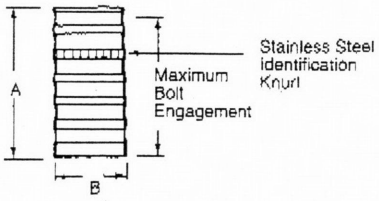

F-43 Plain Ferrule

F-43 Plain Ferrule Selection Chart			
Bolt Diameter and Threads per Inch	Maximum Bolt Engagement	A	B
1/4" – 20 NC	3/4"	1-1/4"	9/16"
3/8" – 16 NC	3/4"	1-1/4"	9/16"
1/2" – 13 NC	1"	1-3/8"	11/16"
5/8" – 11 NC	1-1/8"	1-5/8"	7/8"
3/4" – 10 NC	1-1/8"	1-5/8"	1"
7/8" – 9 NC	1-1/8"	1-5/8"	1-1/4"
1" – 8 NC	1-1/8"	1-5/8"	1-3/8"
1-1/4" – 7 NC	1-3/4"	2-1/2"	1-5/8"
1-1/2" – 6 NC	2-1/4"	3"	1-7/8"

To Order:
Specify: 1) quantity, (2) name, (3) bolt diameter, (4) finish.

Example:
2,000 pcs., F-43 Plain Ferrules, 3/8" bolt diameter, type 304 SS.

F-44 Thin Slab Ferrule Insert

The Dayton Superior F-44 Thin Slab Ferrule Insert is a specially designed insert for use where the depth of embedment is extremely limited and where there is a requirement for limited capacity in both tension and shear. Depending on region, the F-44 will be furnished with either two struts welded to the bottom of the ferrule or one strut looped around the ferrule (see sketch). Minimum spacing between inserts is twice the minimum corner distance.

F-44 Thin Slab Ferrule Insert

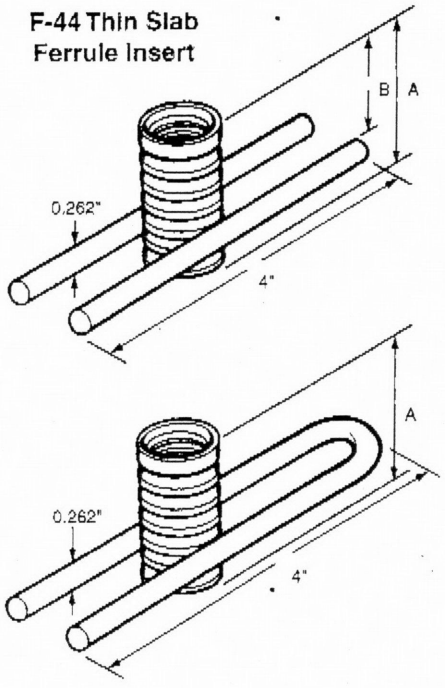

F-44 Thin Slab Ferrule Insert Selection Chart				
Bolt Diameter and Threads Per Inch	Safe Working Load Tension	Maximum Bolt Engagement	Dimensions	
			A	B
1/4" – 20 NC	450 lbs.	3/4"	1-1/4"	9/16"
3/8" – 16 NC	450 lbs.	3/4"	1-1/4"	11/16"
1/2" – 13 NC	900 lbs.	1"	1-3/8"	13/16"
5/8" – 11 NC	1,000 lbs.	1-1/8"	1-5/8"	1-1/16"
3/4" – 10 NC	1,600 lbs.	1-1/8"	1-5/8"	1-1/16"
7/8" – 9 NC	1,600 lbs.	1-1/8"	1-5/8"	1-1/16"
1" – 8 NC	1,600 lbs.	1-1/8"	1-5/8"	1-1/16"

Safe Working Load provides a factor of safety of approximately 3 to 1 in 3,000 psi normal weight concrete.
Safe Working Loads are based on 1/2" setback from face of concrete.

To Order:
Specify: (1) quantity, (2) name, (3) bolt diameter, (4) finish.

Example:
200, F-44 Thin Slab Ferrule Inserts, 1/2" bolt diameter, plain finish.