TESNER STRUCTURAL ENGINEERS

1534 Southeast 25th Avenue Portland, OR 97214 Phone 503-239-9119 Fax 503-239-9122

City of Portland
Bureau of
Development Services
Planning Date 10/25/2012
Approved by
Planning and Zoning Review

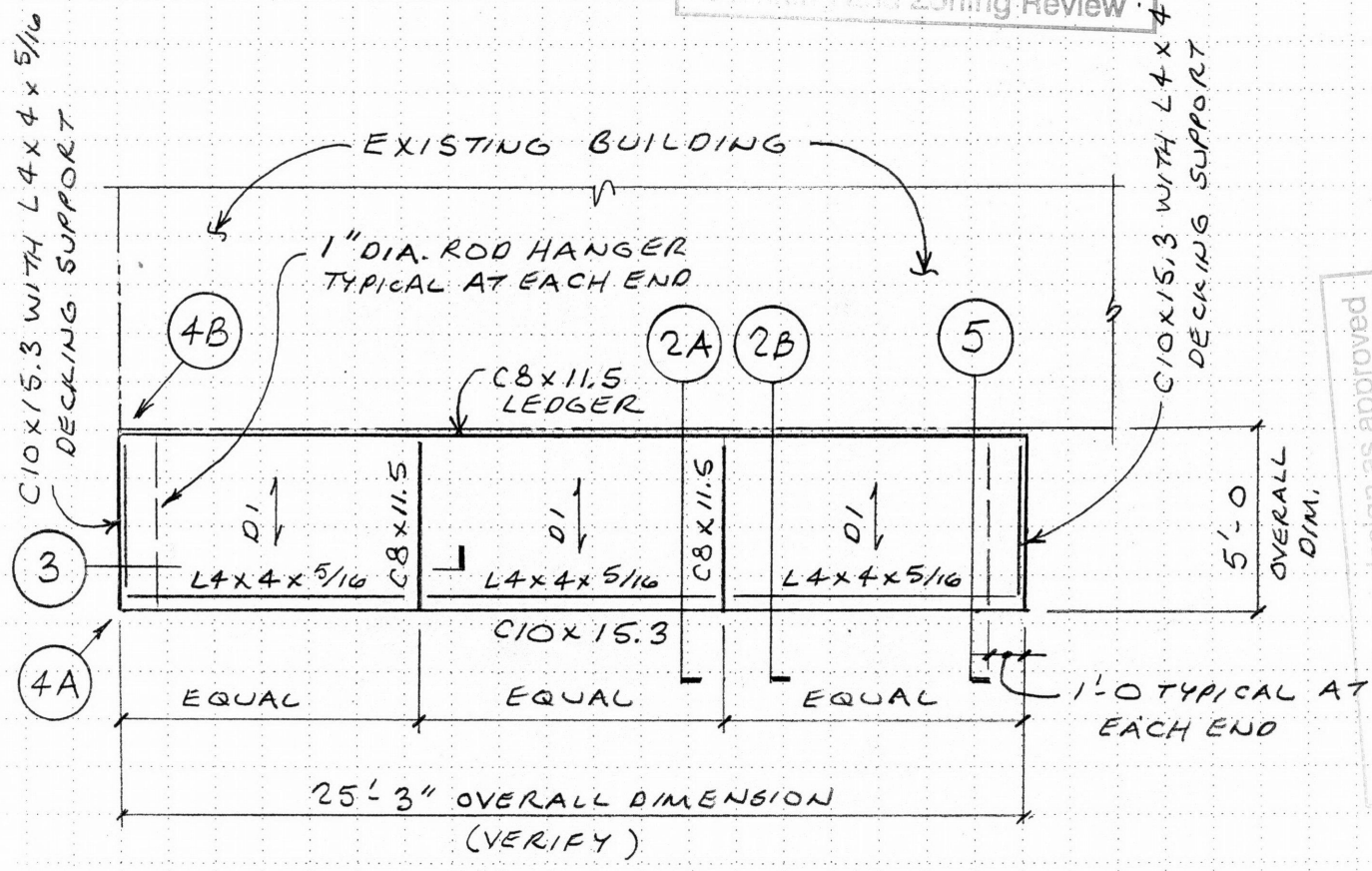

Proposal and design as approved in case-file #LU 12-150556 DZ
No field changes allowed.

GENERAL NOTES

D1 INDICATES VERCO 16 GAGE TYPE PLB-36 ROOF DECK, ATTACH TO ALL SUPPORTS (PERPENDICULAR TO AND PARALLEL WITH DECK SPAN) WITH 1/2" MINIMUM DIAMETER ARC SPOT (PUDDLE) WELDS @ 12" O.C.

ALL STRUCTURAL STEEL SHALL BE ASTM A36 (FY = 36 KSI MINIMUM. ALL WELDING SHALL USE E70XX LOW HYDROGEN ELECTRODES OR EQUIVALENT.

NORTH

1A PLAN: WEST (VANCOUVER AVE.)

STRUCTURAL REGISTERED PROFESSIONAL ENGINEER 16310 OREGON DEC. 1, 1992 JOHN ANTHONY TESNER JR

EXPIRES: 6/30/2014

Project: New Canopies for Leftbank Annex Building
101 N WEIDLER
Client: Leftbank Annex

Proj. No.:
By: JAT
Date: August 2012 Sheet No.:

TESNER STRUCTURAL ENGINEERS

1534 Southeast 25th Avenue Portland, OR 97214 Phone 503-239-9119 Fax 503-239-9122

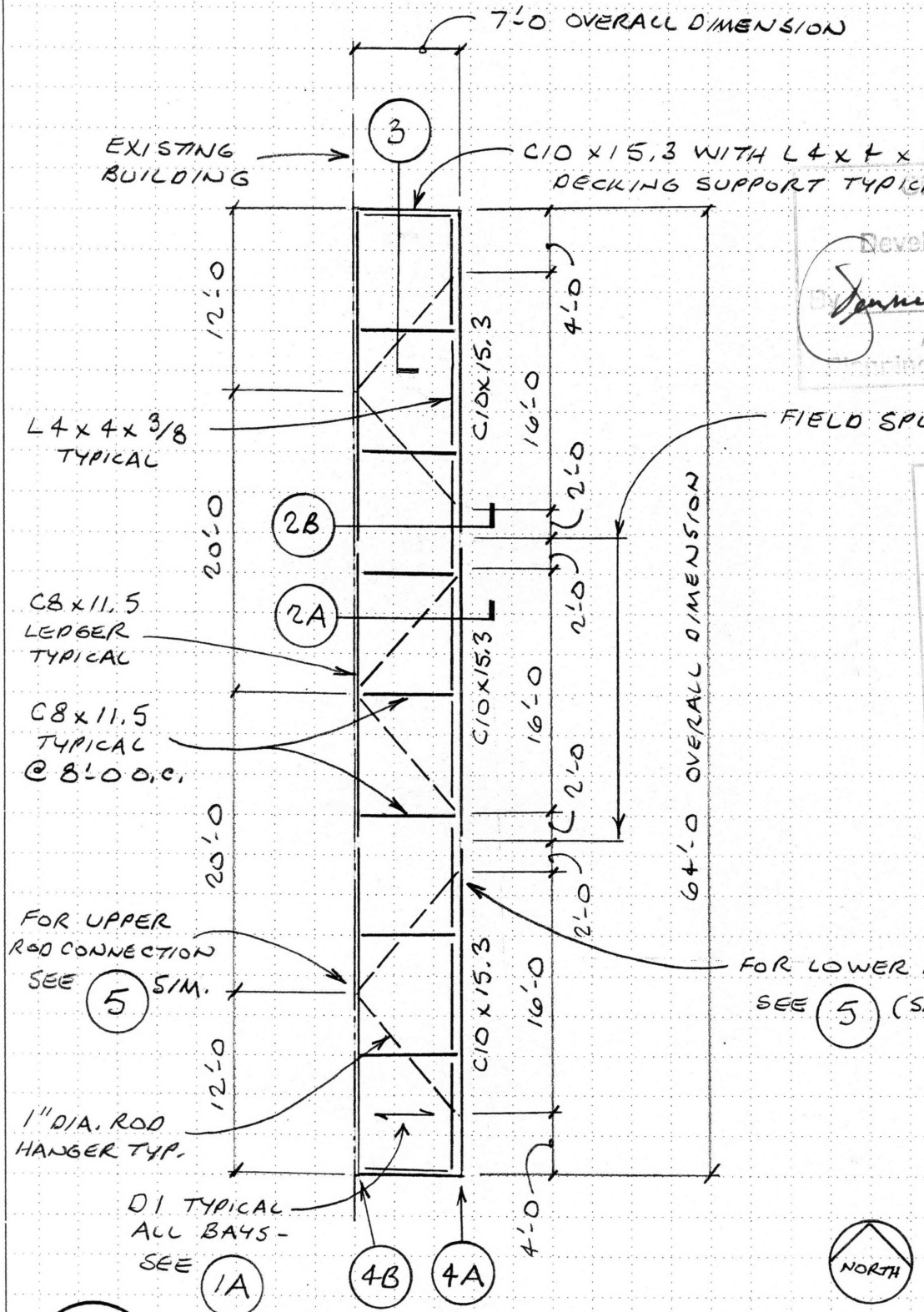

Bureau of Development Services
Date 10/25/2012
Approved by Building And Zoning Review
Proposal and design as approved In case file 12-150556-D2 No field changes allowed.

1B PLAN : EAST (WIEDLER STREET)

SEE 1A FOR GENERAL NOTES

STRUCTURAL REGISTERED PROFESSIONAL ENGINEER 16310 OREGON DEC. 1, 1992 JOHN ANTHONY TESNER JR
EXPIRES: 6/30/2014

Project: New Canopies for Leftbank Annex Building

Client: Leftbank Annex

Proj. No.:

By: JAT

Date: August 2012

Sheet No.:

TESNER STRUCTURAL ENGINEERS

1534 Southeast 25th Avenue Portland, OR 97214 Phone 503-239-9119 Fax 503-239-9122

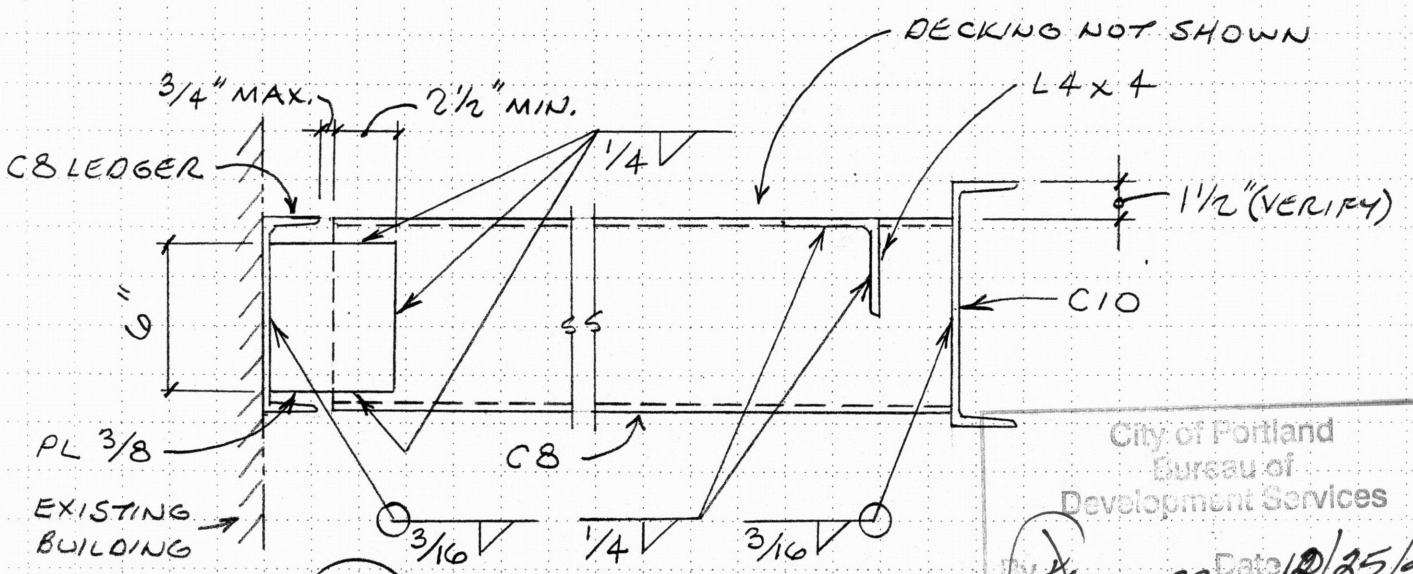

2A

City of Portland
Bureau of
Development Services
By: Zimmerman Date: 12/25/2012
Approved by
Planning and Zoning Review

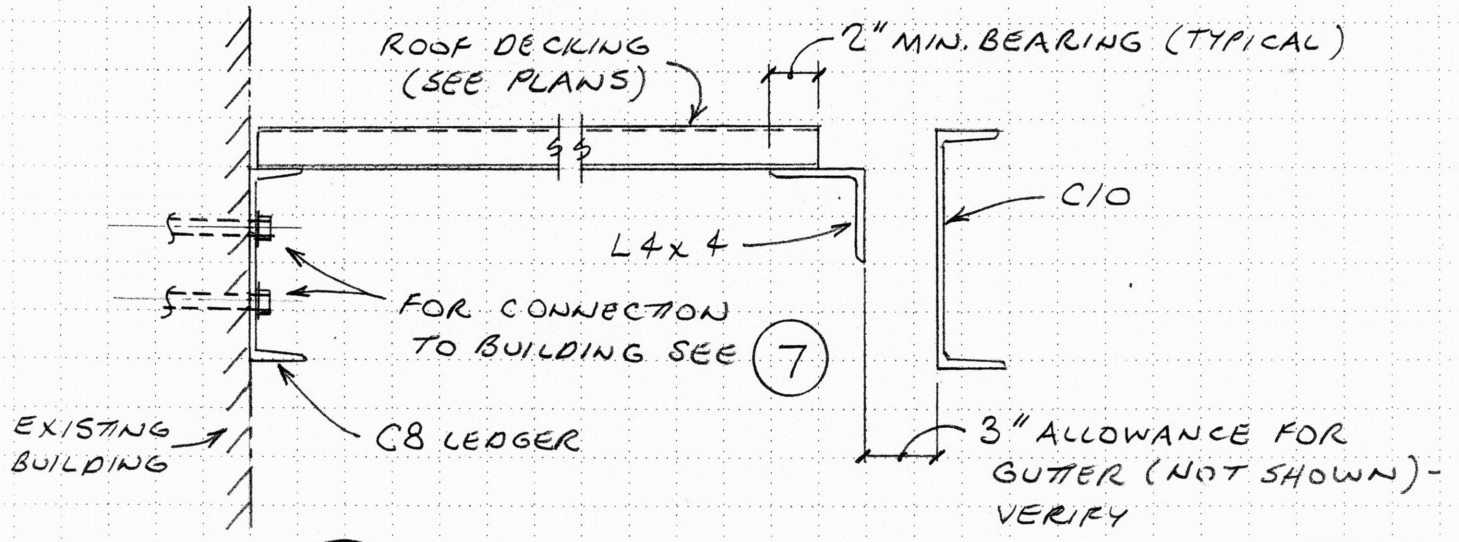

2B

Proposal and design as approved
In case file # LU 12-150556DZ
No field changes allowed.

STRUCTURAL REGISTERED PROFESSIONAL ENGINEER 16310 OREGON DEC. 1, 1992 JOHN ANTHONY TESNER JR

EXPIRES: 6/30/2014

2 CANOPY SECTIONS

Project: New Canopies for Leftbank Annex Building

Client: Leftbank Annex

Proj. No.:

By: JAT

Date: August 2012

Sheet No.:

TESNER STRUCTURAL ENGINEERS

1534 Southeast 25th Avenue Portland, OR 97214 Phone 503-239-9119 Fax 503-239-9122

Proposal and design as approved
In case file #LU
No field changes allowed

City of Portland
Bureau of
Development Services
By _____ Date _____
Approved by
Building and Zoning Review

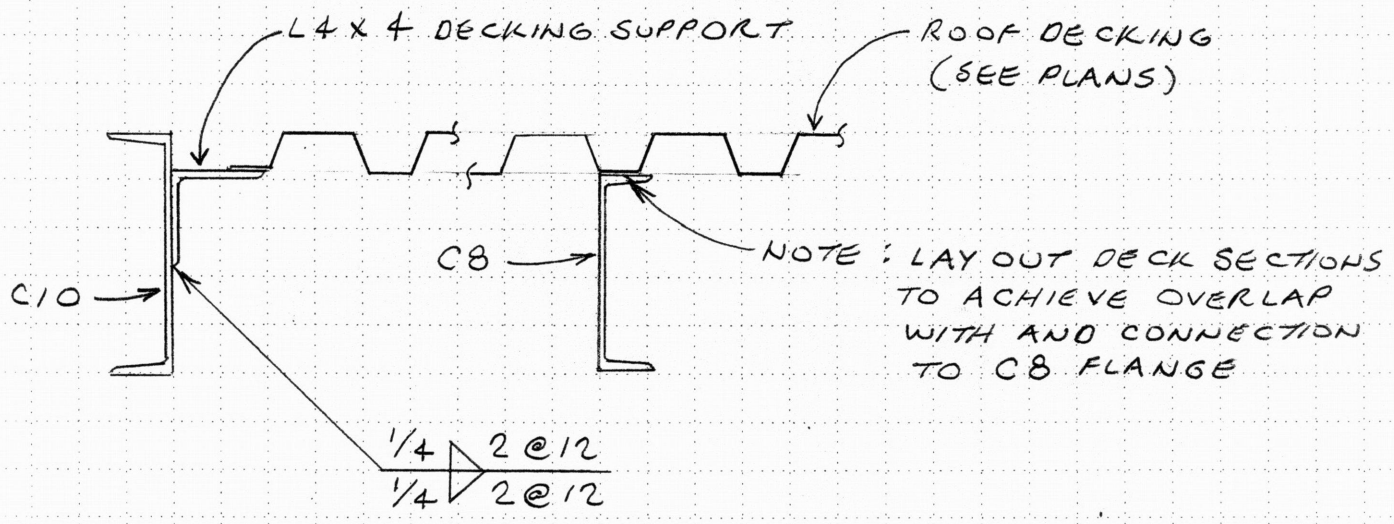

3 CANOPY SECTION

STRUCTURAL REGISTERED PROFESSIONAL ENGINEER 16310
OREGON
DEC. 1, 1992
JOHN ANTHONY TESNER JR

EXPIRES: 6/30/2014

Project: New Canopies for Leftbank Annex Building

Proj. No.: _____

By: JAT

Client: Leftbank Annex

Date: August 2012 Sheet No.: _____

TESNER STRUCTURAL ENGINEERS

1534 Southeast 25th Avenue Portland, OR 97214 Phone 503-239-9119 Fax 503-239-9122

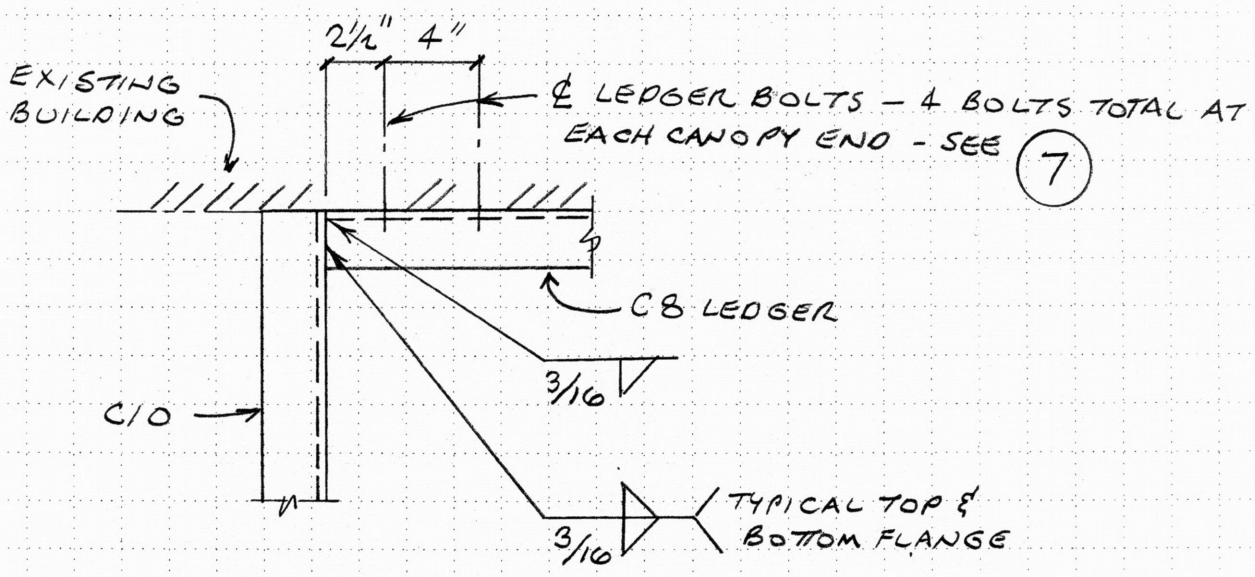

4B

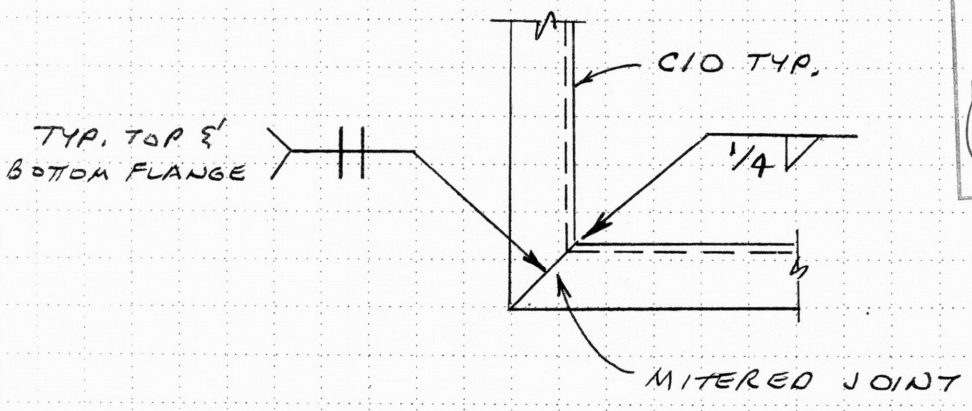

4A

4 DETAILS - PLAN VIEW

City of Portland
Bureau of
Development Services
By Jenning Date 10/25/2012
Approved by
Planning and Zoning Review

Proposal and design as approved
in case file #LU 12-150556 DZ
No field changes allowed.

STRUCTURAL REGISTERED PROFESSIONAL ENGINEER 16310 OREGON DEC. 1, 1992 JOHN ANTHONY TESNER JR

EXPIRES: 6/30/2014

Project: New Canopies for Leftbank Annex Building

Client: Leftbank Annex

Proj. No.:

By: JAT

Date: August 2012

Sheet No.:

TESNER STRUCTURAL ENGINEERS

1534 Southeast 25th Avenue Portland, OR 97214 Phone 503-239-9119 Fax 503-239-9122

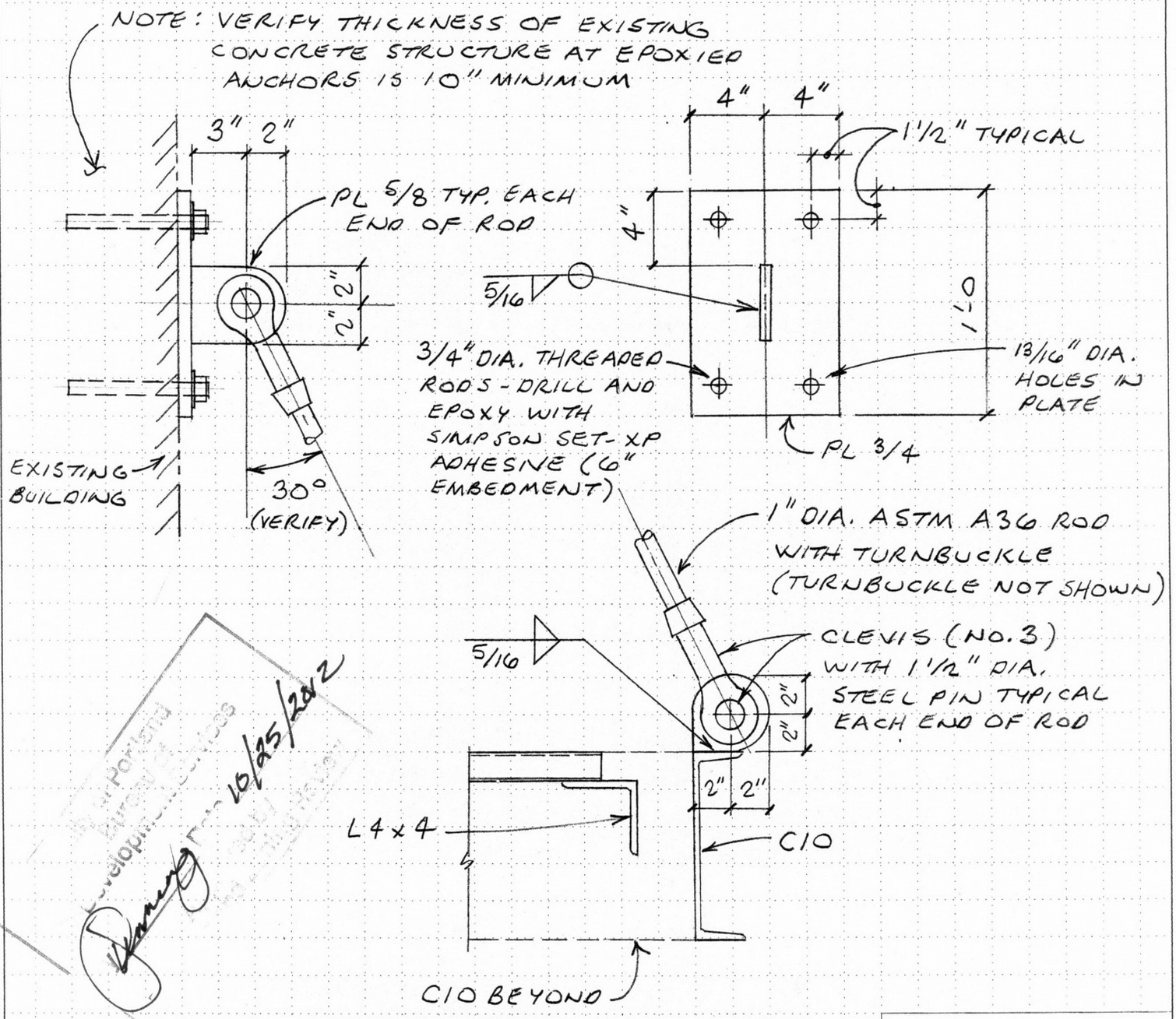

NOTE: DETAILS AT EAST CANOPY SIMILAR (PROVIDE PL 3/4 x 1'-0 x 1'-0 WITH (4) 1" DIA. THREADED RODS - SUBSTITUTE 1 3/4" EDGE DISTANCE AT PLATE AND 5" EMBEDMENT INTO STRUCTURE).

5 ROD HANGER: WEST (VANCOUVER AVE.)

STRUCTURAL REGISTERED PROFESSIONAL ENGINEER 16310 OREGON DEC. 1, 1992 JOHN ANTHONY TESNER JR

EXPIRES: 6/30/2014

Proposal and Design as approved In case file # LU 12-150556 DZ No field changes allowed.

Bureau of Development Services Portland, Oregon Approved with conditions Staff Planner Date 10/25/2012

12-150556 DZ

Project: New Canopies for Leftbank Annex Building

Client: Leftbank Annex

Proj. No.:

By: JAT

Date: August 2012

Sheet No.:

TESNER STRUCTURAL ENGINEERS

1534 Southeast 25th Avenue Portland, OR 97214 Phone 503-239-9119 Fax 503-239-9122

NOTE: FIELD WELD L 4 x 4 x 3/8 TO C8 x 11.5 AT SPLICED CANOPY SECTIONS – FOR WELDS SEE (2A).

AT SPLICED CANOPY SECTIONS TERMINATE C8 x 11.5 LEDGERS WITH 1" MAX. GAP AND ATTACH EACH END TO BUILDING WITH TWO ANCHOR BOLTS PER (7) SIM.

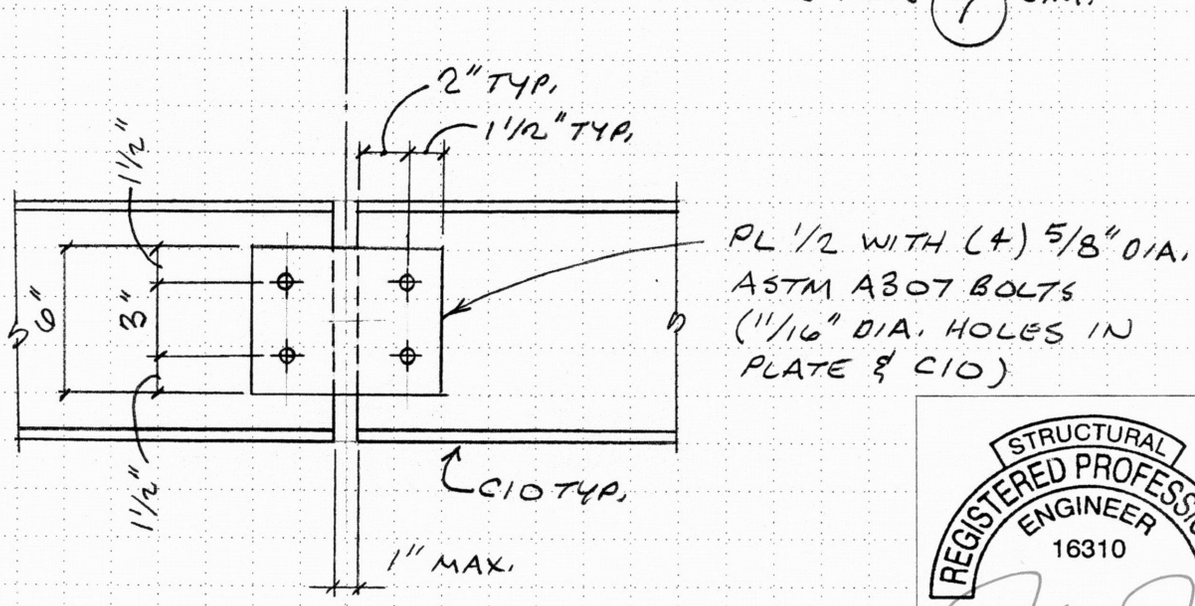

(6) C10 FIELD SPLICE

STRUCTURAL REGISTERED PROFESSIONAL ENGINEER 16310 OREGON DEC. 1, 1992 JOHN ANTHONY TESNER JR

EXPIRES: 6/30/2014

Project: New Canopies for Leftbank Annex Building

Proj. No.:

By: JAT

Client: Leftbank Annex

Date: August 2012

Sheet No.:

TESNER STRUCTURAL ENGINEERS

1534 Southeast 25th Avenue Portland, OR 97214 Phone 503-239-9119 Fax 503-239-9122

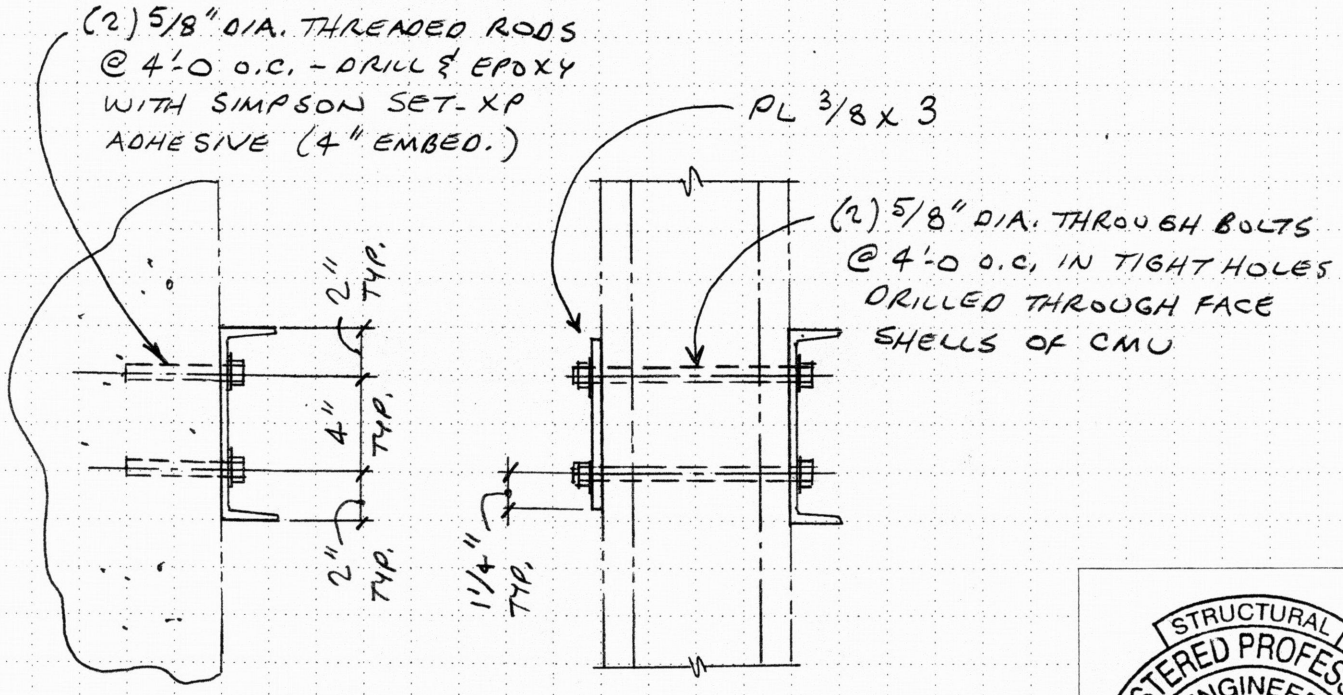

AT CONCRETE OR GROUT-FILLED CMU

AT HOLLOW CMU

7

STRUCTURAL REGISTERED PROFESSIONAL ENGINEER 16310 OREGON DEC. 1, 1992 JOHN ANTHONY TESNER JR

EXPIRES: 6/30/2014

Project: New Canopies for Leftbank Annex Building

Proj. No.:

By: JAT

Client: Leftbank Annex

Date: August 2012

Sheet No.:

TESNER STRUCTURAL ENGINEERS
1534 Southeast 25th Avenue Portland, OR 97214 Phone 503-239-9119 Fax 503-239-9122

STRUCTURAL CALCULATIONS

FOR

NEW CANOPIES AT LEFTBANK ANNEX

PORTLAND, OREGON

STRUCTURAL REGISTERED PROFESSIONAL ENGINEER 16310 OREGON DEC. 1, 1992 JOHN ANTHONY TESNER JR

EXPIRES: 6/30/2014

12-198213-FA

Project: New Canopies for Leftbank Annex Building

Client: Leftbank Annex

Proj. No.:

By: JAT

Date: August 2011

Sheet No.: COVER

TESNER STRUCTURAL ENGINEERS

1534 Southeast 25th Avenue Portland, OR 97214 Phone 503-239-9119 Fax 503-239-9122

(A) MAIN CHANNEL - WEST CANOPY

CONSIDER 10 PSF DEAD LOAD FOR DECKING, WOOD SOFFIT FINISH, ETC.

ESTIMATED ECO-ROOF WEIGHT IS 20-25 PSF - USE 2x25 = 50 PSF FOR DESIGN (CONSV.)

USE 25 PSF FOR SNOW LOAD

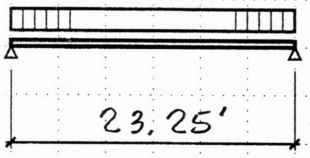

ADD 15 PLF TO DEAD LOAD FOR C10 WEIGHT

$$\omega_{DL} = \left(\frac{5}{2}\right)(10) + 15 = 40 \text{ PLF}$$

$$\omega_{LL} = \left(\frac{5}{2}\right)(50 + 25) = 190 \text{ PLF}$$

$$\Delta_{TOTAL} = 0.775'' = \frac{L}{360} \quad \text{OK}$$

C10 x 15.3

(B) MAIN CHANNEL - EAST CANOPY

$$\omega_{DL} = \left(\frac{7}{2}\right)(10) + 15 = 50 \text{ PLF}$$

$$\omega_{LL} = \left(\frac{7}{2}\right)(50 + 25) = 265 \text{ PLF}$$

CHECK 16' SIMPLE SPAN AND SPAN WITH CANTILEVER

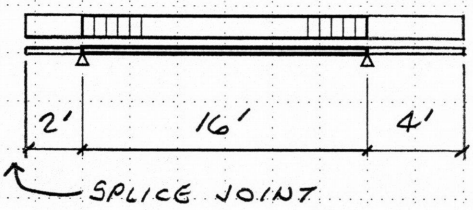

$$\Delta_{TOTAL} = 0.24'' = \frac{L}{800} \quad \text{OK}$$

CONSIDER PATTERNED LIVE LOAD FOR DEFLECTION AT CANTILEVER (CONSV.)

$$\Delta_{LL} = 0.16'' = \frac{L}{300}$$

OK FOR 4' CANTILEVER

C10 x 15.3

(C) LEDGER CHANNEL

USE SAME LOADS AS (B) (WORST CASE - EAST CANOPY)

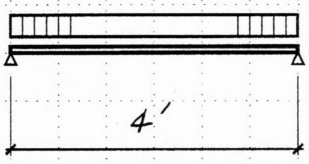

C8 x 11.5

TESNER STRUCTURAL ENGINEERS

1534 Southeast 25th Avenue Portland, OR 97214 Phone 503-239-9119 Fax 503-239-9122

D ROOF DECKING

$W_{LL} = 50 + 25 = 75 PSF$

SINGLE SPAN CONDITION

TYPE PLB-36
1 1/2" DEEP ROOF DECK

22GA FOR 5'-0 SPAN
16GA FOR 7'-0 SPAN
(SATISFIES L/240 DEFLECTION)

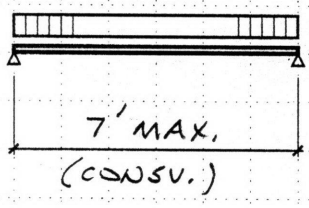

USE 16 GA FOR BOTH CANOPIES

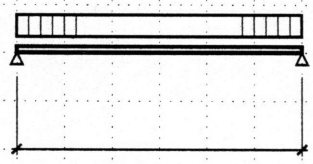

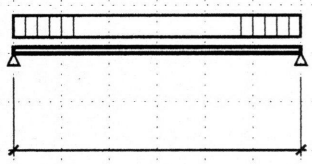

TESNER STRUCTURAL ENGINEERS
1534 Southeast 25th Avenue Portland, OR 97214 Phone 503-239-9119 Fax 503-239-9122

CONNECTIONS

WEST CANOPY -

APPROXIMATE ANGLE OF HANGER RODS IS 30° WITH RESPECT TO VERTICAL

BREAK DOWN INTO VERTICAL AND HORIZ. COMPONENTS

OVERALL LENGTH OF CANOPY IS 25'-3"

VERTICAL COMPONENT:

$V_{DL} = \left(\frac{25.25}{2}\right)(40^*)$
$= 505\#$

$V_{LL} = \left(\frac{25.25}{2}\right)(190^*)$
$= 2400\#$

* SEE (A) FOR UNIFORM LOADS

HORIZONTAL COMPONENT:

MULTIPLY ABOVE BY TAN 30° = 0.577

$H_{DL} = 290\#$

$H_{LL} = 1385\#$

RESULTANT AXIAL TENSION LOAD IN ROD IS

$T = \sqrt{(505+2400)^2 + (290+1385)^2}$
$= 3350\#$

CONT'D

FOR 1" DIA. A36 ROD

$T_{ALLOW} = 15{,}000\#$
$\gg 3350\#$ OK

CHECK ANCHOR BOLTS PER ACI 318 APPENDIX D, ASSUMING CRACKED CONCRETE AND $f_c' = 2500$ PSI (CONSERVATIVE)

USE FACTORED LOADS (STRENGTH DESIGN) ON ANCHOR GROUP

$V_{uay} = (1.2)(505) + (1.6)(1600) + (0.5)(800)$
$= 3560\#$

$N_{ua} = (1.2)(290) + (1.6)(923) + (0.5)(462)$
$= 2050\#$

ABOVE VALUES CONSIDER 1.2 DEAD LOAD FACTOR, 1.6 LIVE LOAD FACTOR FOR 50 PSF ECO-ROOF WEIGHT, AND 0.5 SNOW LOAD FACTOR FOR 25PSF SNOW LOAD

SEE ATTACHED OUTPUT - USE (4) 3/4" DIA. THREADED RODS (DRILL & EPOXY - 6" EMBEDMENT)

Tesner Structural Engineers
1534 S.E. 25th Avenue
Portland, Oregon 97214

Title : New Canopies for Leftbank Annex
Dsgnr: JAT
Description : Steel Canopies

Scope :

Multi-Span Steel Beam

Description Main Channels 10" deep

General Information

Code Ref: AISC 9th ASD, 1997 UBC, 2003 IBC, 2003 NFPA 5000

Fy - Yield Stress 36.00 ksi Load Duration Factor 1.00

Spans Considered Continuous Over Supports

Span Information

Description		West	East	Cant	East Main	Cant
Span	ft	23.25	16.00	2.00	16.00	4.00
Steel Section		**C10X15.3**	**C10X15.3**	**C10X15.3**	**C10X15.3**	**C10X15.3**
End Fixity		Pin-Pin	Pin-Pin	Free-Pin	Pin-Pin	Pin-Free
Unbraced Length	ft	0.00	0.00	0.00	0.00	0.00

Loads

Live Load Used This Span ?		**Yes**	**Yes**	**Yes**	**Yes**	**Yes**
Dead Load	k/ft	0.040	0.050	0.050	0.050	0.050
Live Load	k/ft	0.190	0.265	0.265	0.265	0.265

Results

Mmax @ Cntr	k-ft	15.54	10.08	0.00	8.53	0.00
@ X =	ft	11.62	8.00	0.00	7.57	4.00
Max @ Left End	k-ft	0.00	0.00	0.00	-0.63	-2.52
Max @ Right End	k-ft	0.00	0.00	-0.63	-2.52	0.00
fb : Actual	psi	13,855.4	8,986.6	561.7	7,601.8	2,246.7
Fb : Allowable	psi	23,760.0	23,760.0	23,760.0	23,760.0	23,760.0
		Bending OK	**Bending OK**	**Bending OK**	**Bending OK**	**Bending OK**
fv : Actual	psi	1,114.1	1,050.0	262.5	1,099.2	525.0
Fv : Allowable	psi	14,400.0	14,400.0	14,400.0	14,400.0	14,400.0
		Shear OK	**Shear OK**	**Shear OK**	**Shear OK**	**Shear OK**

Reactions & Deflections

Shear @ Left	k	2.67	2.52	0.00	2.40	1.26
Shear @ Right	k	2.67	2.52	0.63	2.64	0.00
Reactions...						
DL @ Left	k	0.46	0.40	0.00	0.48	0.62
LL @ Left	k	2.21	2.12	0.00	2.55	3.28
Total @ Left	k	2.67	2.52	0.00	3.03	3.90
DL @ Right	k	0.46	0.40	0.48	0.62	0.00
LL @ Right	k	2.21	2.12	2.55	3.28	0.00
Total @ Right	k	2.67	2.52	3.03	3.90	0.00
Max. Deflection	in	-0.775	-0.238	0.077	-0.193	0.127
@ X =	ft	11.62	8.00	0.00	7.89	4.00
Span/Deflection Ratio		360.1	806.8	620.0	992.6	757.8

Query Values

Location	ft	0.00	0.00	0.00	0.00	0.00	0.00	0.00	0.00
Shear	k	2.67	0.00	2.52	0.00	0.00	2.40	1.26	0.00
Moment	k-ft	-0.00	0.00	0.00	0.00	0.00	-0.63	-2.52	0.00
Max. Deflection	in	0.0000	0.0000	0.0000	0.0000	0.0774	0.0000	0.0000	0.0000

Tesner Structural Engineers
1534 S.E. 25th Avenue
Portland, Oregon 97214

Title : New Canopies for Leftbank Annex
Dsgnr: JAT
Description : Steel Canopies

Scope :

Multi-Span Steel Beam

Description Main Channels - East (Patterned Live Load)

General Information

Code Ref: AISC 9th ASD, 1997 UBC, 2003 IBC, 2003 NFPA 5000

Fy - Yield Stress 36.00 ksi Load Duration Factor 1.00

Spans Considered Continuous Over Supports

Span Information

Description		Cant	East Main	Cant	Cant	East Main	Cant
Span	ft	2.00	16.00	4.00	2.00	16.00	4.00
Steel Section		**C10X15.3**	**C10X15.3**	**C10X15.3**	**C10X15.3**	**C10X15.3**	**C10X15.3**
End Fixity		Free-Pin	Pin-Pin	Pin-Free	Free-Pin	Pin-Pin	Pin-Free
Unbraced Length	ft	0.00	0.00	0.00	0.00	0.00	0.00

Loads

Live Load Used This Span ?		**Yes**	**Yes**	**Yes**	**Yes**	**Yes**	**Yes**
Dead Load	k/ft						
Live Load	k/ft	0.265		0.265		0.265	

Results

Mmax @ Cntr	k-ft	0.00	-2.12	0.00	0.00	8.48	0.00
@ X =	ft	0.00	16.00	4.00	2.00	8.00	4.00
Max @ Left End	k-ft	0.00	-0.53	-2.12	0.00	0.00	0.00
Max @ Right End	k-ft	-0.53	-2.12	0.00	0.00	0.00	0.00
fb : Actual	psi	472.5	1,890.0	1,890.0	0.0	7,560.2	0.0
Fb : Allowable	psi	23,760.0	23,760.0	23,760.0	23,760.0	23,760.0	23,760.0
		Bending OK	**Bending OK**	**Bending OK**	**Bending OK**	**Bending OK**	**Bending OK**
fv : Actual	psi	220.8	41.4	441.7	0.0	883.3	0.0
Fv : Allowable	psi	14,400.0	14,400.0	14,400.0	14,400.0	14,400.0	14,400.0
		Shear OK	**Shear OK**	**Shear OK**	**Shear OK**	**Shear OK**	**Shear OK**

Reactions & Deflections

Shear @ Left	k	0.00	0.10	1.06	0.00	2.12	0.00
Shear @ Right	k	0.53	0.10	0.00	0.00	2.12	0.00
Reactions...							
DL @ Left	k	0.00	0.00	0.00	0.00	0.00	0.00
LL @ Left	k	0.00	0.43	1.16	0.00	2.12	2.12
Total @ Left	k	0.00	0.43	1.16	0.00	2.12	2.12
DL @ Right	k	0.00	0.00	0.00	0.00	0.00	0.00
LL @ Right	k	0.43	1.16	0.00	2.12	2.12	0.00
Total @ Right	k	0.43	1.16	0.00	2.12	2.12	0.00
Max. Deflection	in	-0.015	0.038	-0.053	0.080	-0.200	0.160
@ X =	ft	0.00	8.75	4.00	0.00	8.00	4.00
Span/Deflection Ratio		3,115.0	5,064.9	1,821.3	599.3	959.0	599.3

Query Values

Location	ft	0.00	0.00	0.00	0.00	0.00	0.00	0.00	0.00
Shear	k	0.00	0.10	1.06	0.00	0.00	2.12	0.00	0.00
Moment	k-ft	0.00	-0.53	-2.12	0.00	0.00	0.00	0.00	0.00
Max. Deflection	in	-0.0154	0.0000	0.0000	0.0000	0.0801	0.0000	0.0000	0.0000

Tesner Structural Engineers
1534 S.E. 25th Avenue
Portland, Oregon 97214

Title : New Canopies for Leftbank Annex
Dsgnr: JAT
Description : Steel Canopies

Scope :

Multi-Span Steel Beam

Description Ledger Channels

General Information

Code Ref: AISC 9th ASD, 1997 UBC, 2003 IBC, 2003 NFPA 5000

Fy - Yield Stress	36.00 ksi	Load Duration Factor	1.00

All Spans Considered as Individual Beams

Span Information

Description		C
Span	ft	4.00
Steel Section		**C8X11.5**
End Fixity		Pin-Pin
Unbraced Length	ft	0.00

Loads

Live Load Used This Span ?		**Yes**
Dead Load	k/ft	0.050
Live Load	k/ft	0.265

Results

Mmax @ Cntr	k-ft	0.63
@ X =	ft	2.00
Max @ Left End	k-ft	0.00
Max @ Right End	k-ft	0.00
fb : Actual	psi	930.5
Fb : Allowable	psi	23,760.0
		Bending OK
fv : Actual	psi	358.0
Fv : Allowable	psi	14,400.0
		Shear OK

Reactions & Deflections

Shear @ Left	k	0.63
Shear @ Right	k	0.63
Reactions...		
DL @ Left	k	0.10
LL @ Left	k	0.53
Total @ Left	k	0.63
DL @ Right	k	0.10
LL @ Right	k	0.53
Total @ Right	k	0.63
Max. Deflection	in	-0.002
@ X =	ft	2.00
Span/Deflection Ratio		24,935.6

Query Values

Location	ft	0.00	0.00	0.00	0.00	0.00	0.00	0.00	0.00
Shear	k	0.63	0.00	0.00	0.00	0.00	0.00	0.00	0.00
Moment	k-ft	0.00	0.00	0.00	0.00	0.00	0.00	0.00	0.00
Max. Deflection	in	0.0000	0.0000	0.0000	0.0000	0.0000	0.0000	0.0000	0.0000

Type PLB™-36 or HSB®-36

- **1½" Deep Roof Deck**
- **Primer Painted or Galvanized**

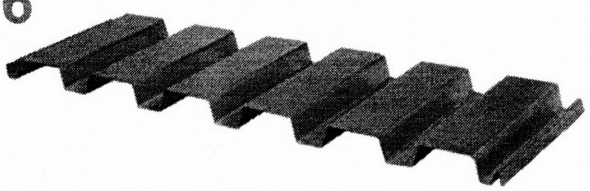

VERTICAL LOADS

Dimensions

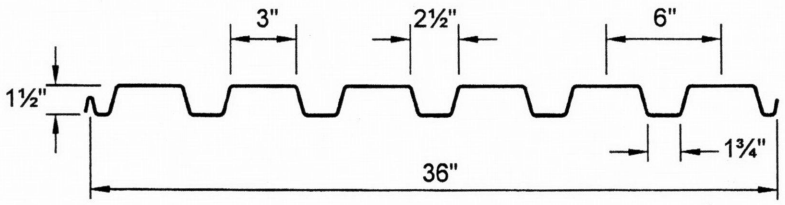

PLB-36 or HSB-36

Standard Interlocking Sidelap

HSB-SS-36

Screw Fastened Sidelap

HSB-30 NESTABLE

Overlapping Sidelap Available 30" Wide – Special Order

Deck Weight and Section Properties

Gage	Weight		I_d for Deflection		Moment		Allowable Reactions per ft of Width (lb)				
	Galv	Painted	Single Span	Multi Span	$+S_{eff}$	$-S_{eff}$	End Bearing			Interior Bearing	
	(psf)	(psf)	(in.^{4}/ft)	(in.^{4}/ft)	(in.^{3}/ft)	(in.^{3}/ft)	2"	3"	4"	3"	4"
22	1.9	1.8	0.180	0.192	0.185	0.194	748	861	931	1248	1337
20	2.3	2.2	0.223	0.231	0.233	0.244	1041	1193	1287	1752	1872
18	2.9	2.8	0.305	0.306	0.318	0.331	1745	1988	2133	2972	3160
16	3.5	3.4	0.381	0.381	0.404	0.410	2612	2959	3164	4485	4751

Notes:

1. Section properties are based on F_y = 40,000 psi.
2. See Verco's evaluation report for section property and allowable reaction adjustment factors for acoustical decks.

Attachment Patterns to Supports

36/4

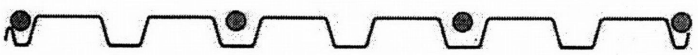

36/5

36/6

36/7

36/9

Note: ● indicates location of weld, power actuated fastener, or screw as indicated in the load tables.

Type PLB™-36 or HSB®-36

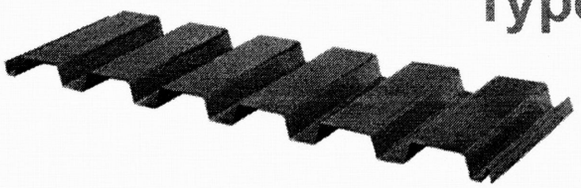

1½" Deep Roof Deck ▪
Primer Painted or Galvanized ▪

VERTICAL LOADS

Allowable Uniform Loads (psf)

SPAN	GAGE		SPAN (ft-in.) 4'-0"	5'-0"	5'-6"	6'-0"	6'-6"	7'-0"	7'-6"	8'-0"	8'-6"	9'-0"	9'-6"	10'-0"	10'-6"	11'-0"	11'-6"	12'-0"
SINGLE	22	Stress	185	118	98	82	70	60	53	46	41	37	33	30				
		L/240	185	95	71	55	43	34	28	23	19	16	14	12				
	20	Stress	223	149	123	104	88	76	66	58	52	46	41	37	34	31	28	26
		L/240	229	117	88	68	53	43	35	29	24	20	17	15	13	11	10	8
	18	Stress	300	204	168	141	120	104	90	80	70	63	56	51	46	42	38	35
		L/240	♦♦♦	160	120	93	73	58	47	39	33	27	23	20	17	15	13	12
	16	Stress	300	259	214	180	153	132	115	101	89	80	72	65	59	53	49	45
		L/240	♦♦♦	200	150	116	91	73	59	49	41	34	29	25	22	19	16	14
DOUBLE	22	Stress	194	124	103	86	73	63	55	49	43	38	34	31				
		L/240	♦♦♦	♦♦♦	♦♦♦	♦♦♦	♦♦♦	♦♦♦	♦♦♦	♦♦♦	♦♦♦	♦♦♦	♦♦♦	30				
	20	Stress	244	156	129	108	92	80	69	61	54	48	43	39	35	32	30	27
		L/240	♦♦♦	♦♦♦	♦♦♦	♦♦♦	♦♦♦	♦♦♦	♦♦♦	♦♦♦	♦♦♦	♦♦♦	43	37	32	27	24	21
	18	Stress	300	212	175	147	125	108	94	83	73	65	59	53	48	44	40	37
		L/240	♦♦♦	♦♦♦	♦♦♦	♦♦♦	♦♦♦	♦♦♦	♦♦♦	♦♦♦	♦♦♦	♦♦♦	56	48	42	36	32	28
	16	Stress	300	262	217	182	155	134	117	103	91	81	73	66	60	54	50	46
		L/240	♦♦♦	♦♦♦	♦♦♦	♦♦♦	♦♦♦	♦♦♦	♦♦♦	♦♦♦	♦♦♦	♦♦♦	70	60	52	45	40	35
TRIPLE	22	Stress	243	155	128	108	92	79	69	61	54	48	43	39				
		L/240	♦♦♦	♦♦♦	♦♦♦	♦♦♦	86	69	56	46	39	33	28	24				
	20	Stress	300	195	161	136	116	100	87	76	68	60	54	49	44	40	37	34
		L/240	♦♦♦	♦♦♦	♦♦♦	132	104	83	68	56	47	39	33	29	25	21	19	17
	18	Stress	300	265	219	184	157	135	118	103	92	82	73	66	60	55	50	46
		L/240	♦♦♦	♦♦♦	♦♦♦	175	138	110	90	74	62	52	44	38	33	28	25	22
	16	Stress	300	300	271	228	194	167	146	128	113	101	91	82	74	68	62	57
		L/240	♦♦♦	♦♦♦	♦♦♦	218	172	137	112	92	77	65	55	47	41	35	31	27

Notes:
1. Stress = Uniform load which produces maximum allowable stress in deck.
2. L/240 = Uniform load which produces L/240 deflection in deck.
3. Self-weight of the deck should be included when determining dead load.
4. The symbol ♦♦♦ indicates allowable uniform load based on deflection exceeds allowable uniform load based on stress.

Anchor Calculations

Anchor Selector (Version 4.10.0.0)

Job Name : Leftbank Annex West

1) Input

Calculation Method : ACI 318 Appendix D For Cracked Concrete

Code : ACI 318-08

Calculation Type : Analysis

Code Report : ESR-2508

a) Layout

Anchor : 3/4" SET-XP

Steel Grade: F1554 GR. 36

Built-up Grout Pads : No

Number of Anchors : 4

Embedment Depth : 6 in

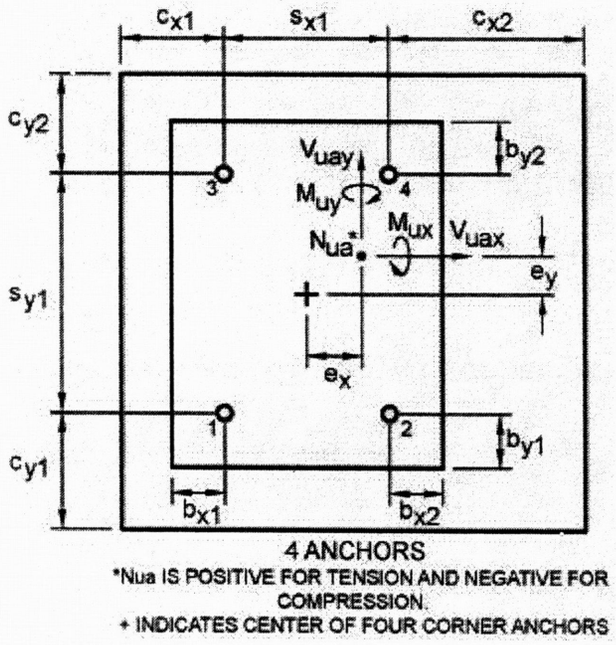

Anchor Layout Dimensions :

c_{x1} : 6 in

c_{x2} : 6 in

c_{y1} : 6 in

c_{y2} : 6 in

b_{x1} : 1.5 in

b_{x2} : 1.5 in

b_{y1} : 1.5 in

b_{y2} : 1.5 in

s_{x1} : 5 in

s_{y1} : 9 in

b) Base Material

Concrete : Normal weight

f'_c : 2500.0 psi

Cracked Concrete : Yes

$\Psi_{c,V}$: 1.00

Condition : B tension and shear

ϕF_p : 1381.3 psi

Thickness, h_a : 10 in

Supplementary edge reinforcement : No

Hole Condition : Dry Concrete

Inspection : Continuous

Temperature Range : 1 (Maximum 110 ^oF short term and 75 ^oF long term temp.)

c) Factored Loads

Load factor source : ACI 318 Section 9.2

N_{ua} : 2050 lb

V_{uax} : 0 lb

V_{uay} : 3560 lb

M_{ux} : 0 lb*ft

M_{uy} : 0 lb*ft

e_x : 0 in

e_y : 0 in

Moderate/high seismic risk or intermediate/high design category : No

Anchor w/ sustained tension : No

Anchors only resist wind and/or seismic loads : No

Apply entire shear load at front row for breakout : No

d) Anchor Parameters

From ESR-2508 :

Anchor Model = SETXP d_a = 0.75 in

Category = 1 h_{ef} = 6 in

h_{min} = 9.75 in c_{ac} = 18 in

c_{min} = 1.75 in s_{min} = 3 in

Ductile = Yes

2) Tension Force on Each Individual Anchor

Anchor #1 N_{ua1} = 512.50 lb

Anchor #2 N_{ua2} = 512.50 lb

Anchor #3 N_{ua3} = 512.50 lb

Anchor #4 N_{ua4} = 512.50 lb

Sum of Anchor Tension ΣN_{ua} = 2050.00 lb

a_x = 0.00 in

a_y = 0.00 in

e'_{Nx} = 0.00 in

e'_{Ny} = 0.00 in

3) Shear Force on Each Individual Anchor

Resultant shear forces in each anchor:

Anchor #1 V_{ua1} = 890.00 lb (V_{ua1x} = 0.00 lb , V_{ua1y} = 890.00 lb)

Anchor #2 V_{ua2} = 890.00 lb (V_{ua2x} = 0.00 lb , V_{ua2y} = 890.00 lb)

Anchor #3 V_{ua3} = 890.00 lb (V_{ua3x} = 0.00 lb , V_{ua3y} = 890.00 lb)

Anchor #4 V_{ua4} = 890.00 lb (V_{ua4x} = 0.00 lb , V_{ua4y} = 890.00 lb)

Sum of Anchor Shear ΣV_{uax} = 0.00 lb, ΣV_{uay} = 3560.00 lb

e'_{Vx} = 0.00 in

e'_{Vy} = 0.00 in

4) Steel Strength of Anchor in Tension [Sec. D.5.1]

$N_{sa} = nA_{se} f_{uta}$ [Eq. D-3]

Number of anchors acting in tension, n = 4

N_{sa} = 19370 lb (for each individual anchor) [ESR-2508]

ϕ = 0.75 [D.4.4]

ϕN_{sa} = 14527.50 lb (for each individual anchor)

5) Concrete Breakout Strength of Anchor Group in Tension [Sec. D.5.2]

$N_{cbg} = A_{Nc}/A_{Nco}\Psi_{ec,N}\Psi_{ed,N}\Psi_{c,N}\Psi_{cp,N}N_b$ [Eq. D-5]

Number of influencing edges = 4

h_{ef} (adjusted for edges per D.5.2.3) = 4.000 in

A_{Nco} = 144.00 in^2 [Eq. D-6]

A_{Nc} = 357.00 in^2

$\Psi_{ec,Nx}$ = 1.0000 [Eq. D-9]

$\Psi_{ec,Ny}$ = 1.0000 [Eq. D-9]

$\Psi_{ec,N}$ = 1.0000 (Combination of x-axis & y-axis eccentricity factors.)

Smallest edge distance, $c_{a,min}$ = 6.00 in

$\Psi_{ed,N}$ = 1.0000 [Eq. D-10 or D-11]

Note: Cracking shall be controlled per D.5.2.6

$\Psi_{c,N}$ = 1.0000 [Sec. D.5.2.6]

$\Psi_{cp,N}$ = 1.0000 [Eq. D-12 or D-13]

$N_b = k_c \lambda \sqrt{f'_c}\, h_{ef}^{1.5}$ = 6800.00 lb [Eq. D-7]

k_c = 17 [Sec. D.5.2.6]

N_{cbg} = 16858.33 lb [Eq. D-5]

ϕ = 0.65 [D.4.4]

ϕN_{cbg} = 10957.92 lb (for the anchor group)

6) Adhesive Strength of Anchor in Tension [Sec. D.5.3 (AC308 Sec.3.3)]

$\tau_{k,cr}$ = 760 psi [ESR-2508]

$\tau_{k,max,cr} = k_{cr} \sqrt{h_{ef}} \sqrt{f'_c}/(\pi\, d_a)$ [Eq. D-16i]

k_{cr} = 17 [ESR-2508]

h_{ef} (unadjusted) = 6 in

$\tau_{k,max,cr}$ = 883.66 psi

$N_{ao} = \tau_{k,cr} \pi\, d_a h_{ef}$ = 10744.25 lb [Eq. D-16f]

$\tau_{k,uncr}$ = 1905.00 psi for use in [Eq. D-16d]

$s_{cr,Na} = \min[20\, d_a \sqrt{(\tau_{k,uncr}/1450)}\, ,\, 3h_{ef}]$ = 17.193 in [Eq. D-16d]

$c_{cr,Na} = s_{cr,Na}/2$ = 8.597 in [Eq. D-16e]

$N_{ag} = A_{Na}/A_{Nao} \Psi_{ed,Na} \Psi_{g,Na} \Psi_{ec,Na} \Psi_{p,Na} N_{ao}$ [Eq. D-16b]

A_{Nao} = 295.60 in^2 [Eq. D-16c]

A_{Na} = 357.00 in^2

$\Psi_{ec,Nax} = 1/(1+2e'_{Nx}/s_{cr,Na})$ = 1.0000 [Eq. D-16j]

$\Psi_{ec,Nay} = 1/(1+2e'_{Ny}/s_{cr,Na})$ = 1.0000 [Eq. D-16j]

$\Psi_{ec,Na}$ = 1.0000 (Combination of x-axis and y-axis eccentricity factors.)

Smallest edge distance, $c_{a,min}$ = 6.00 in

$\Psi_{ed,Na} = \min[0.7+0.3c_{a,min}/c_{cr,Na}\, ,\, 1.0]$ = 0.9094 [Eq. D-16m]

$\Psi_{p,Na}$ = 1.0000 [Sec. D.5.3.14]

$\Psi_{g,Na} = \Psi_{g,Nao} + (s/s_{cr,Na})^{0.5}(1-\Psi_{g,Nao})$ [Eq. D-16g]

s = 9 in (largest spacing)

$\Psi_{g,Nao} = \max\{\sqrt{n} - [(\sqrt{n} - 1)(\tau_{k,cr}/\tau_{k,max,cr})^{1.5}],\, 1.0\}$ [Eq. D-16h]

$\Psi_{g,Nao}$ = 1.2024

$\Psi_{g,Na}$ = 1.0560

N_{ag} = 12460.32 lb [Eq. D-16b]

ϕ = 0.65 [ESR-2508]

ϕN_{ag} = 8099.21 lb (for the anchor group)

7) Side Face Blowout of Anchor in Tension [Sec. D.5.4]

Concrete side face blowout strength is only calculated for headed anchors in tension close to an edge, $c_{a1} < 0.4h_{ef}$. Not applicable in this case.

8) Steel Strength of Anchor in Shear [Sec D.6.1]

$V_{sa} = n0.6A_{se} f_{uta}$ [Eq. D-20]

V_{sa} = 11625.00 lb (for each individual anchor) [ESR-2508]

ϕ = 0.65 [D.4.4]

ϕV_{sa} = 7556.25 lb (for each individual anchor)

9) Concrete Breakout Strength of Anchor Group in Shear [Sec D.6.2]

Case 1: Anchor(s) closest to edge checked against sum of anchor shear loads at the edge

In x-direction...

$V_{cbgx} = A_{vcx}/A_{vcox}\Psi_{ec,V}\Psi_{ed,V}\Psi_{c,V}\Psi_{h,V} V_{bx}$ [Eq. D-22]

c_{a1} = 6.00 in

A_{vcx} = 189.00 in^2

A_{vcox} = 162.00 in^2 [Eq. D-23]

$\Psi_{ec,V}$ = 1.0000 [Eq. D-26]

$\Psi_{ed,V}$ = 0.9000 [Eq. D-27 or D-28]

$\Psi_{c,V}$ = 1.0000 [Sec. D.6.2.7]

$\Psi_{h,V} = \sqrt{(1.5c_{a1} / h_a)}$ = 1.0000 [Sec. D.6.2.8]

$V_{bx} = 7(l_e/ d_a)^{0.2}\sqrt{d_a}\lambda\sqrt{f'_c}(c_{a1})^{1.5}$ [Eq. D-24]

l_e = 6.00 in

V_{bx} = 6752.17 lb

V_{cbgx} = 7089.78 lb [Eq. D-22]

ϕ = 0.70

ϕV_{cbgx} = 4962.85 lb (for the anchor group)

In y-direction...

$V_{cbgy} = A_{vcy}/A_{vcoy}\Psi_{ec,V}\Psi_{ed,V}\Psi_{c,V}\Psi_{h,V}\,V_{by}$ [Eq. D-22]

c_{a1} = 6.00 in

A_{vcy} = 153.00 in^2

A_{vcoy} = 162.00 in^2 [Eq. D-23]

$\Psi_{ec,V}$ = 1.0000 [Eq. D-26]

$\Psi_{ed,V}$ = 0.9000 [Eq. D-27 or D-28]

$\Psi_{c,V}$ = 1.0000 [Sec. D.6.2.7]

$\Psi_{h,V} = \sqrt{(1.5c_{a1} / h_a)}$ = 1.0000 [Sec. D.6.2.8]

$V_{by} = 7(l_e/ d_a)^{0.2}\sqrt{d_a}\lambda\sqrt{f'_c}(c_{a1})^{1.5}$ [Eq. D-24]

l_e = 6.00 in

V_{by} = 6752.17 lb

V_{cbgy} = 5739.35 lb [Eq. D-22]

ϕ = 0.70

ϕV_{cbgy} = 4017.54 lb (for the anchor group)

Case 2: Anchor(s) furthest from edge checked against total shear load

In x-direction...

$V_{cbgx} = A_{vcx}/A_{vcox}\Psi_{ec,V}\Psi_{ed,V}\Psi_{c,V}\Psi_{h,V}\,V_{bx}$ [Eq. D-22]

c_{a1} = 6.67 in (adjusted for edges per D.6.2.4)

A_{vcx} = 210.00 in^2

A_{vcox} = 200.00 in^2 [Eq. D-23]

$\Psi_{ec,V}$ = 1.0000 [Eq. D-26]

$\Psi_{ed,V}$ = 0.8800 [Eq. D-27 or D-28]

$\Psi_{c,V}$ = 1.0000 [Sec. D.6.2.7]

$\Psi_{h,V} = \sqrt{(1.5c_{a1} / h_a)}$ = 1.0000 [Sec. D.6.2.8]

$V_{bx} = 7(l_e/ d_a)^{0.2}\sqrt{d_a}\lambda\sqrt{f'_c}(c_{a1})^{1.5}$ [Eq. D-24]

l_e = 6.00 in

V_{bx} = 7908.24 lb

V_{cbgx} = 7307.21 lb [Eq. D-22]

ϕ = 0.70

ϕV_{cbgx} = 5115.05 lb (for the entire anchor group)

In y-direction...

$V_{cbgy} = A_{vcy}/A_{vcoy}\Psi_{ec,V}\Psi_{ed,V}\Psi_{c,V}\Psi_{h,V}\,V_{by}$ [Eq. D-22]

c_{a1} = 6.67 in (adjusted for edges per D.6.2.4)

A_{vcy} = 170.00 in^2

A_{vcoy} = 200.00 in^2 [Eq. D-23]

$\Psi_{ec,V}$ = 1.0000 [Eq. D-26]

$\Psi_{ed,V}$ = 0.8800 [Eq. D-27 or D-28]

$\Psi_{c,V}$ = 1.0000 [Sec. D.6.2.7]

$\Psi_{h,V} = \sqrt{(1.5c_{a1} / h_a)}$ = 1.0000 [Sec. D.6.2.8]

$V_{by} = 7(l_e / d_a)^{0.2}\sqrt{d_a}\lambda\sqrt{f'_c}(c_{a1})^{1.5}$ [Eq. D-24]

l_e = 6.00 in

V_{by} = 7908.24 lb

V_{cbgy} = 5915.36 lb [Eq. D-22]

ϕ = 0.70

ϕV_{cbgy} = 4140.75 lb (for the entire anchor group)

Case 3: Anchor(s) closest to edge checked for parallel to edge condition
Check anchors at c_{x1} edge

$V_{cbgx} = A_{vcx}/A_{vcox}\Psi_{ec,V}\Psi_{ed,V}\Psi_{c,V}\Psi_{h,V} V_{bx}$ [Eq. D-22]

c_{a1} = 6.00 in

A_{vcx} = 189.00 in^2

A_{vcox} = 162.00 in^2 [Eq. D-23]

$\Psi_{ec,V}$ = 1.0000 [Eq. D-26]

$\Psi_{ed,V}$ = 1.0000 [Sec. D.6.2.1(c)]

$\Psi_{c,V}$ = 1.0000 [Sec. D.6.2.7]

$\Psi_{h,V} = \sqrt{(1.5c_{a1} / h_a)}$ = 1.0000 [Sec. D.6.2.8]

$V_{bx} = 7(l_e / d_a)^{0.2}\sqrt{d_a}\lambda\sqrt{f'_c}(c_{a1})^{1.5}$ [Eq. D-24]

l_e = 6.00 in

V_{bx} = 6752.17 lb

V_{cbgx} = 7877.53 lb [Eq. D-22]

$V_{cbgy} = 2 * V_{cbgx}$ [Sec. D.6.2.1(c)]

V_{cbgy} = 15755.07 lb

ϕ = 0.70

ϕV_{cbgy} = 11028.55 lb (for the anchor group)

Check anchors at c_{y1} edge

$V_{cbgy} = A_{vcy}/A_{vcoy}\Psi_{ec,V}\Psi_{ed,V}\Psi_{c,V}\Psi_{h,V}\,V_{by}$ [Eq. D-22]

c_{a1} = 6.00 in

A_{vcy} = 153.00 in^2

A_{vcoy} = 162.00 in^2 [Eq. D-23]

$\Psi_{ec,V}$ = 1.0000 [Eq. D-26]

$\Psi_{ed,V}$ = 1.0000 [Sec. D.6.2.1(c)]

$\Psi_{c,V}$ = 1.0000 [Sec. D.6.2.7]

$\Psi_{h,V} = \sqrt{(1.5c_{a1} / h_a)}$ = 1.0000 [Sec. D.6.2.8]

$V_{by} = 7(l_e/ d_a)^{0.2}\sqrt{d_a}\lambda\sqrt{f'_c}(c_{a1})^{1.5}$ [Eq. D-24]

l_e = 6.00 in

V_{by} = 6752.17 lb

V_{cbgy} = 6377.05 lb [Eq. D-22]

$V_{cbgx} = 2 * V_{cbgy}$ [Sec. D.6.2.1(c)]

V_{cbgx} = 12754.10 lb

ϕ = 0.70

ϕV_{cbgx} = 8927.87 lb (for the anchor group)

Check anchors at c_{x2} edge

$V_{cbgx} = A_{vcx}/A_{vcox}\Psi_{ec,V}\Psi_{ed,V}\Psi_{c,V}\Psi_{h,V}\,V_{bx}$ [Eq. D-22]

c_{a1} = 6.00 in

A_{vcx} = 189.00 in^2

A_{vcox} = 162.00 in^2 [Eq. D-23]

$\Psi_{ec,V}$ = 1.0000 [Eq. D-26]

$\Psi_{ed,V}$ = 1.0000 [Eq. D-27 or D-28] [Sec. D.6.2.1(c)]

$\Psi_{c,V}$ = 1.0000 [Sec. D.6.2.7]

$\Psi_{h,V} = \sqrt{(1.5c_{a1} / h_a)}$ = 1.0000 [Sec. D.6.2.8]

$V_{bx} = 7(l_e/ d_a)^{0.2}\sqrt{d_a}\lambda\sqrt{f'_c}(c_{a1})^{1.5}$ [Eq. D-24]

l_e = 6.00 in

V_{bx} = 6752.17 lb

V_{cbgx} = 7877.53 lb [Eq. D-22]

$V_{cbgy} = 2 * V_{cbgx}$ [Sec. D.6.2.1(c)]

V_{cbgy} = 15755.07 lb

ϕ = 0.70

ϕV_{cbgy} = 11028.55 lb (for the anchor group)

Check anchors at c_{y2} edge

$V_{cbgy} = A_{vcy}/A_{vcoy}\Psi_{ec,V}\Psi_{ed,V}\Psi_{c,V}\Psi_{h,V}\,V_{by}$ [Eq. D-22]

c_{a1} = 6.00 in

A_{vcy} = 153.00 in^2

A_{vcoy} = 162.00 in^2 [Eq. D-23]

$\Psi_{ec,V}$ = 1.0000 [Eq. D-26]

$\Psi_{ed,V}$ = 1.0000 [Sec. D.6.2.1(c)]

$\Psi_{c,V}$ = 1.0000 [Sec. D.6.2.7]

$\Psi_{h,V} = \sqrt{(1.5c_{a1} / h_a)}$ = 1.0000 [Sec. D.6.2.8]

$V_{by} = 7(l_e/ d_a)^{0.2}\sqrt{d_a}\lambda\sqrt{f'_c}(c_{a1})^{1.5}$ [Eq. D-24]

l_e = 6.00 in

V_{by} = 6752.17 lb

V_{cbgy} = 6377.05 lb [Eq. D-22]

$V_{cbgx} = 2 * V_{cbgy}$ [Sec. D.6.2.1(c)]

V_{cbgx} = 12754.10 lb

ϕ = 0.70

ϕV_{cbgx} = 8927.87 lb (for the anchor group)

10) Concrete Pryout Strength of Anchor Group in Shear [Sec. D.6.3]

$V_{cpg} = \min[k_{cp}N_{ag}, k_{cp}N_{cbg}]$ [Eq. D-30b]

k_{cp} = 2 [Sec. D.6.3.2]

e'_{Vx} = 0.00 in (Applied shear load eccentricity relative to anchor group c.g.)

e'_{Vy} = 0.00 in (Applied shear load eccentricity relative to anchor group c.g.)

$\Psi_{ec,Nx}$ = 1.0000 [Eq. D-9] (Calulated using applied shear load eccentricity)

$\Psi_{ec,Ny}$ = 1.0000 [Eq. D-9] (Calulated using applied shear load eccentricity)

$\Psi_{ec,N'}$ = 1.0000 (Combination of x-axis & y-axis eccentricity factors)

$N_{ag} = (A_{Naa}/A_{Na})(\Psi_{ec,N'}/\Psi_{ec,Na})N_{ag}$

N_{ag} = 12460.32 lb (from Section (6) of calculations)

A_{Na} = 357.00 in^2 (from Section (6) of calculations)

A_{Naa} = 357.00 in^2 (considering all anchors)

$\Psi_{ec,Na}$ = 1.0000 (from Section(6) of calculations)

N_{ag} = 12460.32 lb (considering all anchors)

$N_{cbg} = (A_{Nca}/A_{Nc})(\Psi_{ec,N'}/\Psi_{ec,N})N_{cbg}$

N_{cbg} = 16858.33 lb (from Section (5) of calculations)

A_{Nc} = 357.00 in^2 (from Section (5) of calculations)

A_{Nca} = 357.00 in^2 (considering all anchors)

$\Psi_{ec,N}$ = 1.0000 (from Section(5) of calculations)

N_{cbg} = 16858.33 lb (considering all anchors)

V_{cpg} = 24920.63 lb

ϕ = 0.70 [D.4.4]

ϕV_{cpg} = 17444.44 lb (for the anchor group)

11) Check Demand/Capacity Ratios [Sec. D.7]

Tension

- Steel : 0.0353
- Breakout : 0.1871
- Adhesive : 0.2531
- Sideface Blowout : N/A

Shear

- Steel : 0.1178
- Breakout (case 1) : 0.4431
- Breakout (case 2) : 0.8597
- Breakout (case 3) : 0.1614
- Pryout : 0.2041

T.Max(0.25) + V.Max(0.86) = 1.11 <= 1.2 [Sec D.7.3]

Interaction check: PASS

Use 3/4" diameter F1554 GR. 36 SET-XP anchor(s) with 6 in. embedment