VLMK CONSULTING ENGINEERS
3933 SW Kelly Avenue • Portland • OR • 97239-4393

P 503.222.4453
F 503.248.9263
E vlmk@vlmk.com
W www.vlmk.com

STRUCTURAL CALCULATIONS

for

2720 NW SHERLOCK TI

2720 NW Sherlock Avenue
Portland, OR

for

Oregon Business Architecture

8419 Southwest 19th Avenue
Portland, OR 97219

REGISTERED PROFESSIONAL ENGINEER
17,312
OREGON
JULY 19, 1994
HAVLIN G. KEMP
Exp. 6-30-13

Prepared By: Stephen Stenberg, E.I.T.

VLMK Job Number: 20120575

November 30, 2012

1 - 12/06/12

1 - 12/06/12

2720 NW Sherlock TI

2720 NW Sherlock Avenue
Portland, OR

VLMK JOB NO. 20120575

STRUCTURAL CALCULATIONS FOR BUILDING PERMIT

TABLE OF CONTENTS

Design Outline and Criteria	DC-1	thru	DC-2
Aerial and Curb/Unit Attachments Details	S-1	thru	S-8
Structural Calculations			
HVAC Design	H-1	thru	H-8 1
Concrete Ramp Design and Wall Opening	C-1	thru	C-12
Reference Sheets Only	R-1	thru	R-10

DESCRIPTION OF STRUCTURAL SYSTEM

The '2720 NW Sherlock TI' project consists of the addition of multiple partition walls, (1) concrete ramp, (5) window openings, and (2) mechanical units at the facility located at 2720 NW Sherlock Avenue, Portland OR. This package includes structural calculations verifying the adequacy of the existing concrete walls, new ramp and railing, and existing roof framing, as well as details for the attachment of the new units to resist wind and seismic forces.

*****LIMITATIONS*****

VLMK Consulting Engineers was retained in a limited capacity for this project. The design is based upon information provided by the client, who is solely responsible for the accuracy of the information. No responsibility and/or liability is assumed by, nor is any to be assigned to, VLMK Consulting Engineers for items beyond that shown in this Structural Calculation Package.

DESIGN CRITERIA

CODES:

2010 Oregon Structural Specialty Code (Based on the 2009 IBC)

DESIGN LOADS:

Live Loads:

Roof Snow Load

Flat Roof Snow Load, P_f	25.0	psf

Dead Loads:

Roof

Roofing (new and future)	4.0	psf
Insulation	1.6	psf
Sheathing (3/4" T&G plywood)	2.3	psf
42" TJM @ 4'-0" O.C.	2.3	psf
Sprinkler	1.7	psf
Miscellaneous	1.7	psf
Total Roof Load	13.6	psf

Mechanical Unit (New):

580J-04A	600	lbs
580J-08D	977	lbs

**Note: Curb Weights Included*

Wind:

Basic Wind Speed (3-second gust)	95 mph
Wind Importance Factor, I_w	$I_w = 1.0$
Occupancy Category	II
Wind Exposure	B

Seismic:

Seismic Importance Factor	1.0
Occupancy Category	II
Mapped Spectral Response Accelerations	$S_s = 98.3\%$
	$S_1 = 34.7\%$
Site Class	D (Assumed)
Spectral Response Coefficients	$S_{ds} = 72.5\%$
	$S_{d1} = 39.5\%$
Seismic Design Category	D

Component Anchorage Factors	a_p	R_p	I_p
HVAC Equip	2.5	6.0	1.0

MATERIALS

Concrete:		
Footings		f'_c = 3,000 psi
Slab-on-grade (exterior)		f'_c = 3,000 psi
Structural Steel:		
Metal Studs	18 and 20 Gauge ASTM A1003 ST33H	F_y = 33 ksi
	16 Gauge and heavier ASTM A1003 ST50H	F_y = 50 ksi
Drilled Anchors:		
Concrete Screw Anchors	Simpson Titen HD Screw Anchor	ICC ESR-2713
Wood Framing:		
Joists, Beams and Stringers		Douglas Fir #2

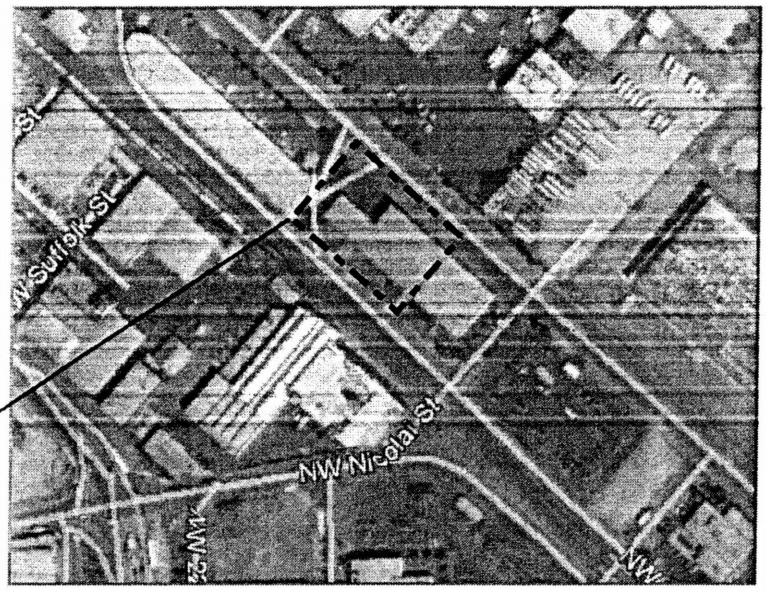

AREA OF WORK

1 / S-1 2720 NW SHERLOCK

NTS

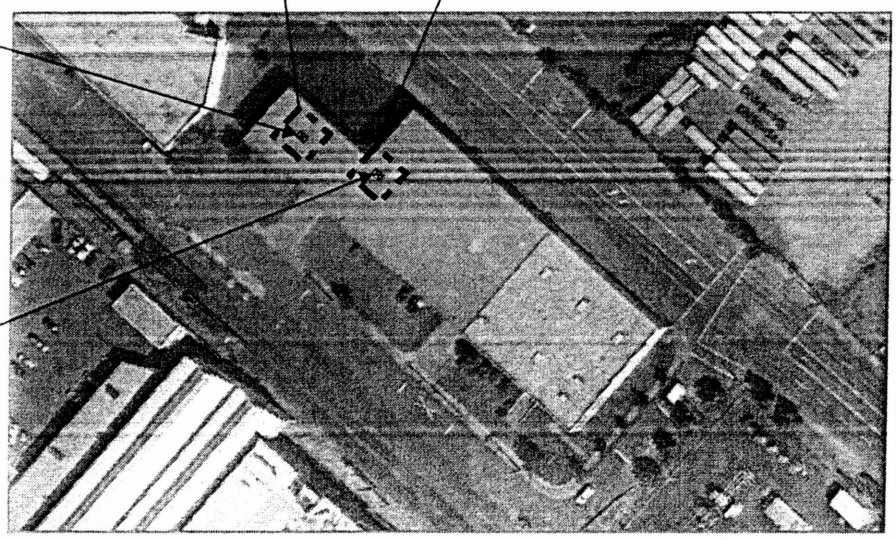

NEW UNIT TO BE INSTALLED ON NEW OR EXISTING FRAMING (WT = 600#)

NEW UNIT TO BE INSTALLED ON NEW OR EXISTING FRAMING (WT = 977#)

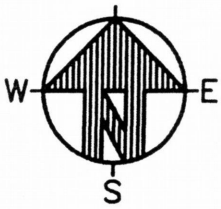

2 / S-1 AREA OF WORK

NTS

VLMK CONSULTING ENGINEERS
3933 SW Kelly Avenue • Portland • Oregon 97239-4393
P 503.222.4453
F 503.248.9263
E vlmk@vlmk.com
W www.vlmk.com

2720 NW SHERLOCK TI
2720 NW SHERLOCK AVENUE
PORTLAND, OR

AREA OF WORK

20120575 PROJ. NO.	11/12 DATE
SMS DRAWN	HGK CHECKED
S-1 SHEET NO	

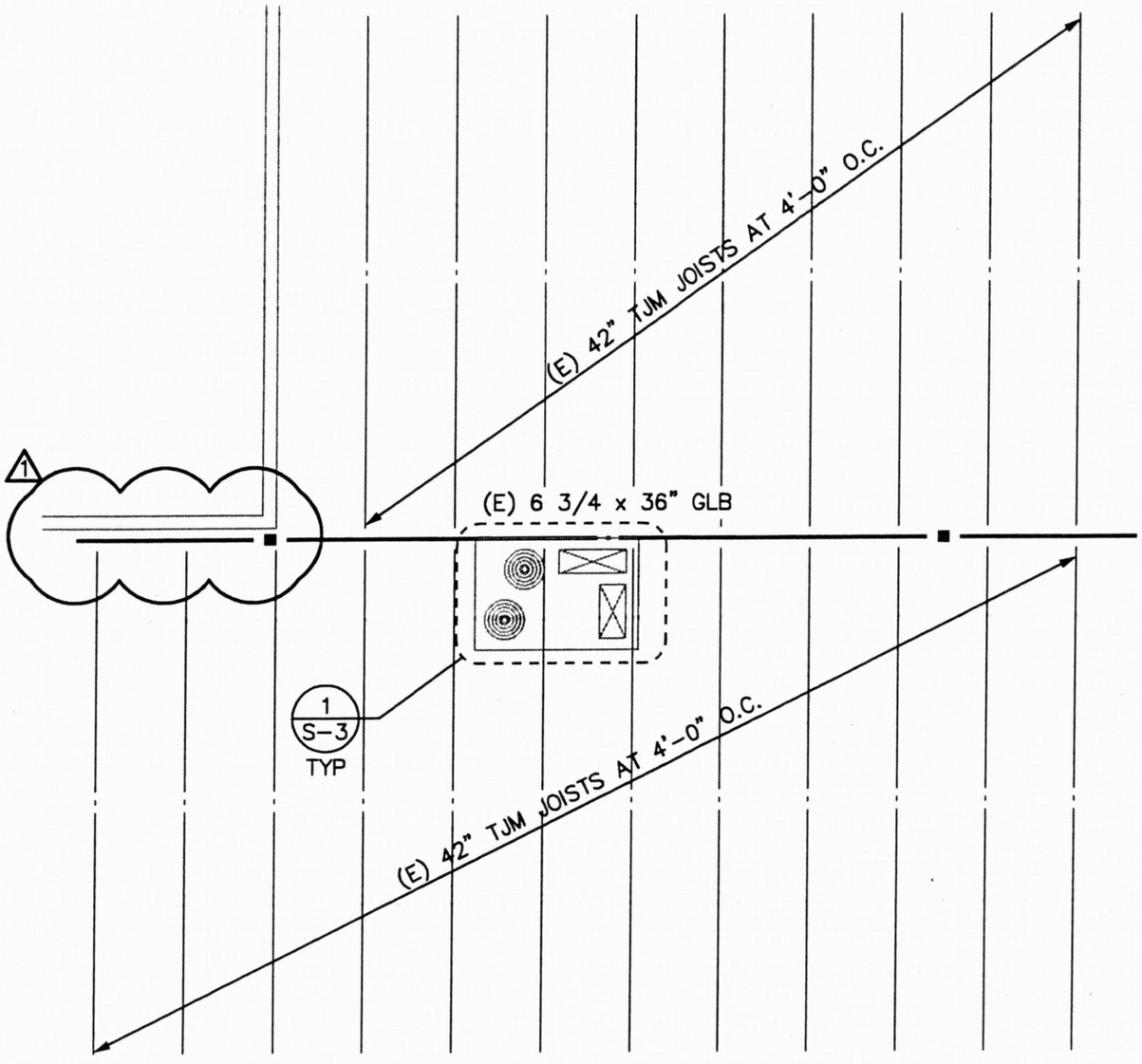

1 / S-2 PARTIAL ROOF FRAMING PLAN

1/8" = 1'-0"

1 - 12/06/12

20120575 20120575-S2 (REV 1).dwg 06 Dec 2012 - 12:57 pm stephens

VLMK CONSULTING ENGINEERS
3933 SW Kelly Avenue • Portland • Oregon 97239-4393
F 503.222.4453
T 503.248.9263
E vlmk@vlmk.com
W www.vlmk.com

2720 NW SHERLOCK TI
2720 NW SHERLOCK AVENUE
PORTLAND, OR

PARTIAL ROOF FRAMING PLAN

20120575 PROJ. NO.	11/12 DATE
SMS DRAWN	HGK CHECKED
S-2 SHEET NO	

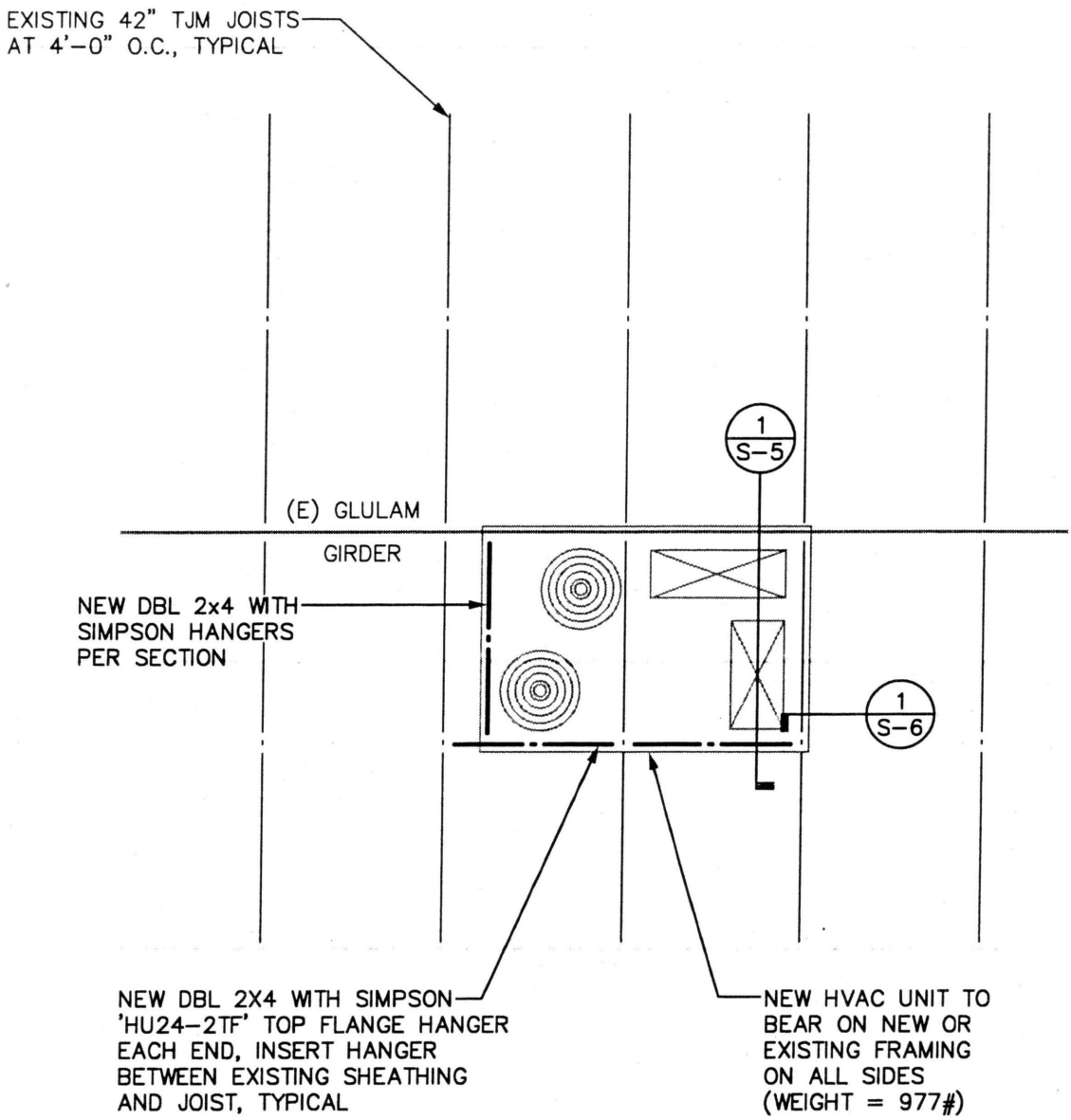

1 / S-3 ENLARGED FRAMING PLAN

1/4" = 1'-0"

20120575 20120575-S3.dwg 30 Nov 2012 - 10:25 am stephens

VLMK CONSULTING ENGINEERS
3933 SW Kelly Avenue • Portland • Oregon 97239-4393
503.222.4453
503.248.9263
vlmk@vlmk.com
www.vlmk.com

2720 NW SHERLOCK TI
2720 NW SHERLOCK AVENUE
PORTLAND, OR

ENLARGED FRAMING PLAN

20120575 PROJ. NO.	11/12 DATE
SMS DRAWN	HGK CHECKED
S-3 SHEET NO	

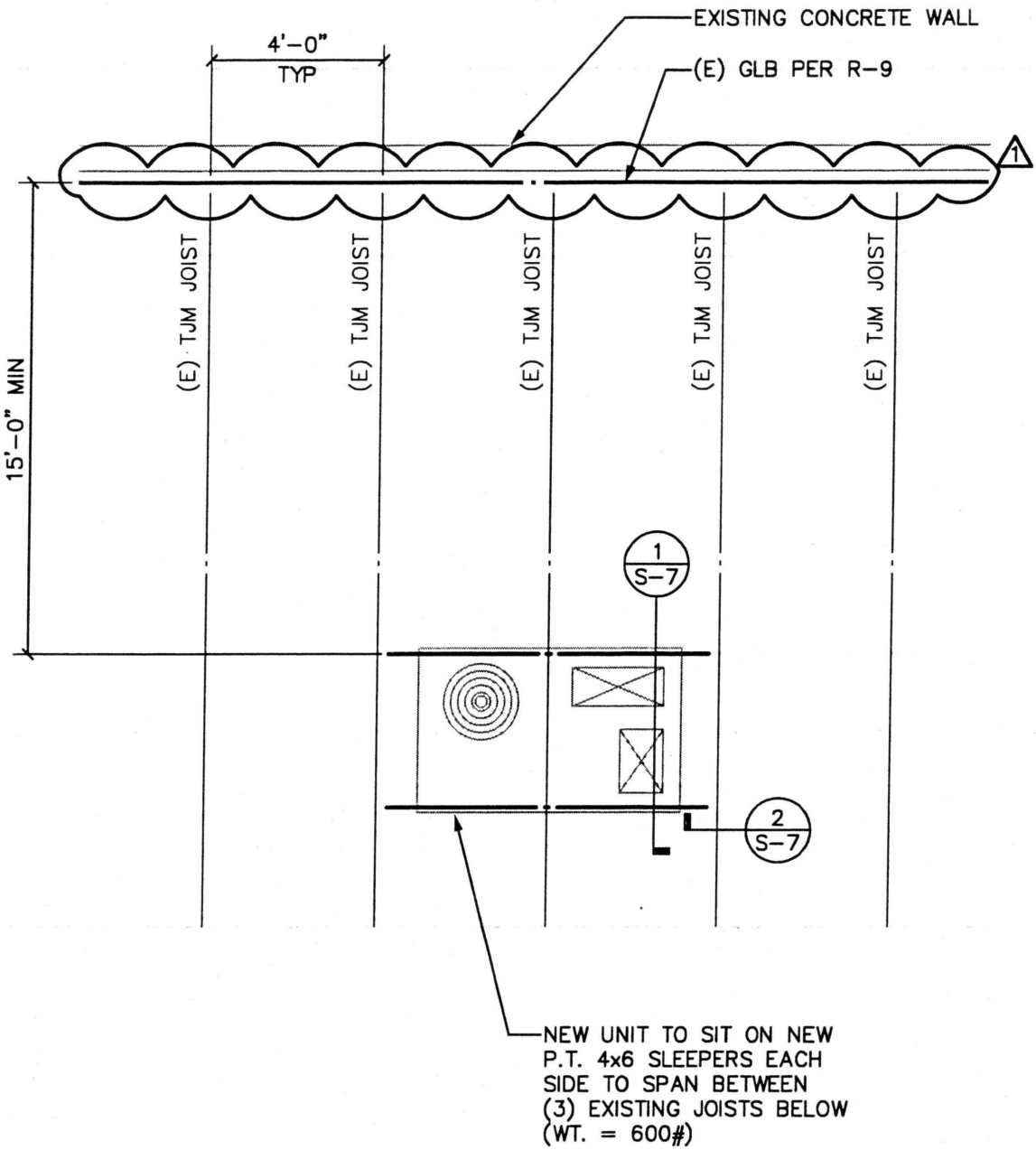

1 / S-4 ENLARGED ROOF FRAMING PLAN

1/4" = 1'-0"

1 - 12/06/12

20120575 20120575-S4.dwg 06 Dec 2012 - 12:50 pm stephens

VLMK CONSULTING ENGINEERS
3933 SW Kelly Avenue • Portland • Oregon 97239-4393
503.222.4453
503.248.9263
vlmk@vlmk.com
www.vlmk.com

2720 NW SHERLOCK TI
2720 NW SHERLOCK AVENUE
PORTLAND, OR

ENLARGED ROOF FRAMING PLAN

20120575 PROJ. NO.	11/12 DATE
SMS DRAWN	HGK CHECKED
S-4 SHEET NO	

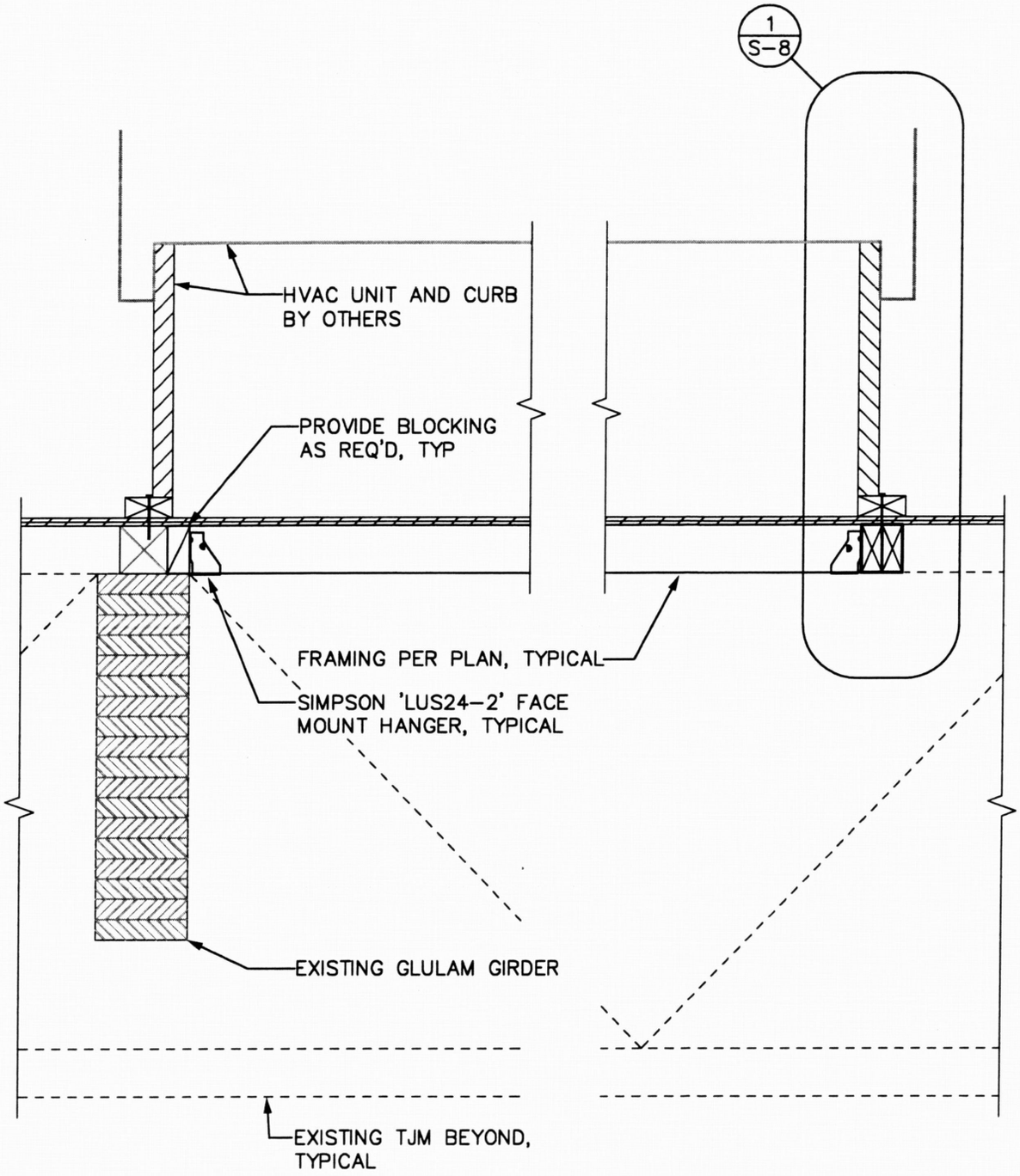

1 / S-5 HVAC SUPPORT DETAIL

1" = 1'-0"

20120575 20120575-S5.dwg 29 Nov 2012 - 11:30 am stephens

VLMK CONSULTING ENGINEERS
3933 SW Kelly Avenue • Portland • Oregon 97239-4393
F 503.222.4453
F 503.248.9263
E vlmk@vlmk.com
W www.vlmk.com

2720 NW SHERLOCK TI
2720 NW SHERLOCK AVENUE
PORTLAND, OR

HVAC SUPPORT DETAIL

20120575 PROJ. NO.	11/12 DATE
SMS DRAWN	HGK CHECKED
S-5 SHEET NO	

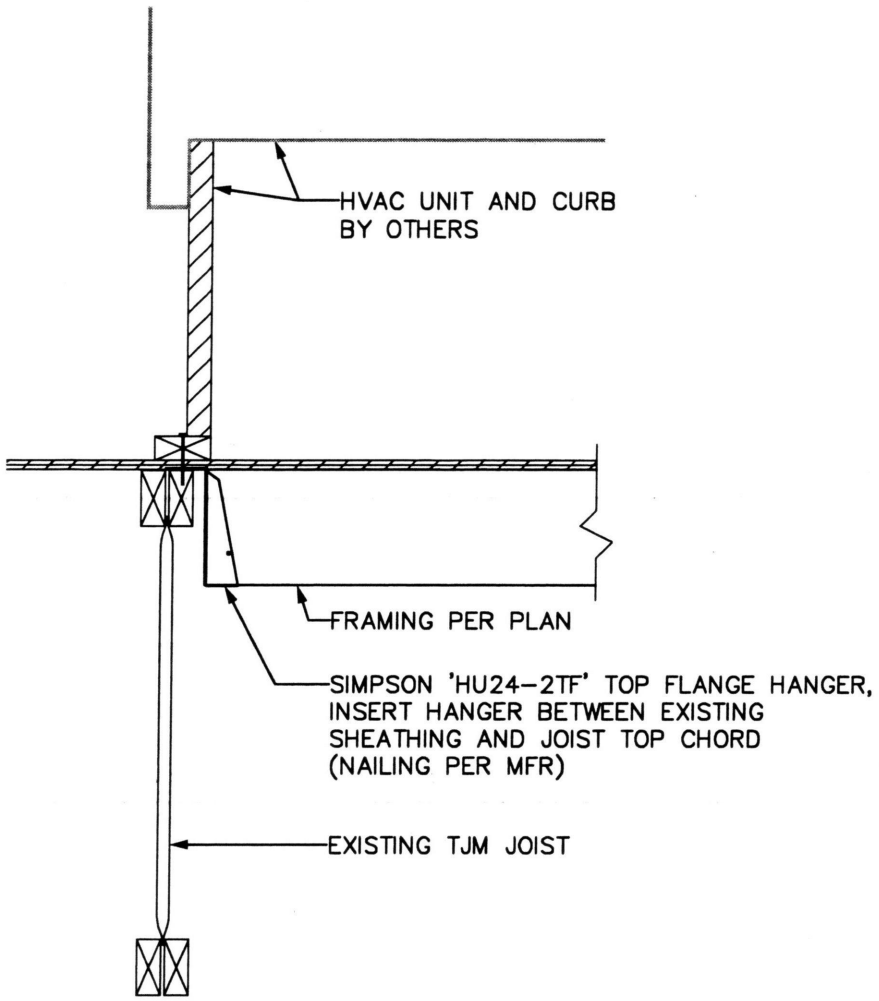

1 / S-6 HVAC SUPPORT DETAIL

1" = 1'-0"

20120575 20120575-S6.dwg 29 Nov 2012 - 11:30 am stephens

VLMK CONSULTING ENGINEERS
3933 SW Kelly Avenue • Portland • Oregon 97239-4393
503.222.4453
503.248.9263
vlmk@vlmk.com
www.vlmk.com

2720 NW SHERLOCK TI
2720 NW SHERLOCK AVENUE
PORTLAND, OR

HVAC SUPPORT DETAIL

20120575 PROJ. NO.	11/12 DATE
SMS DRAWN	HGK CHECKED
S-6 SHEET NO	

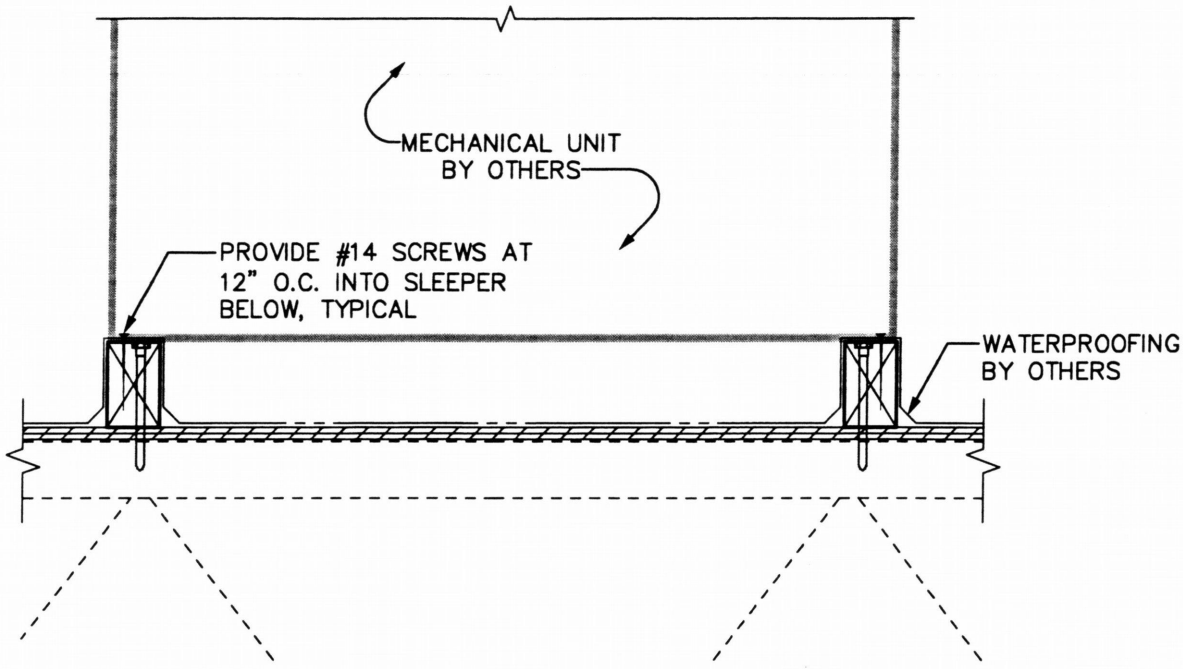

1/S-2 HVAC SLEEPER DETAIL

1" = 1'-0"

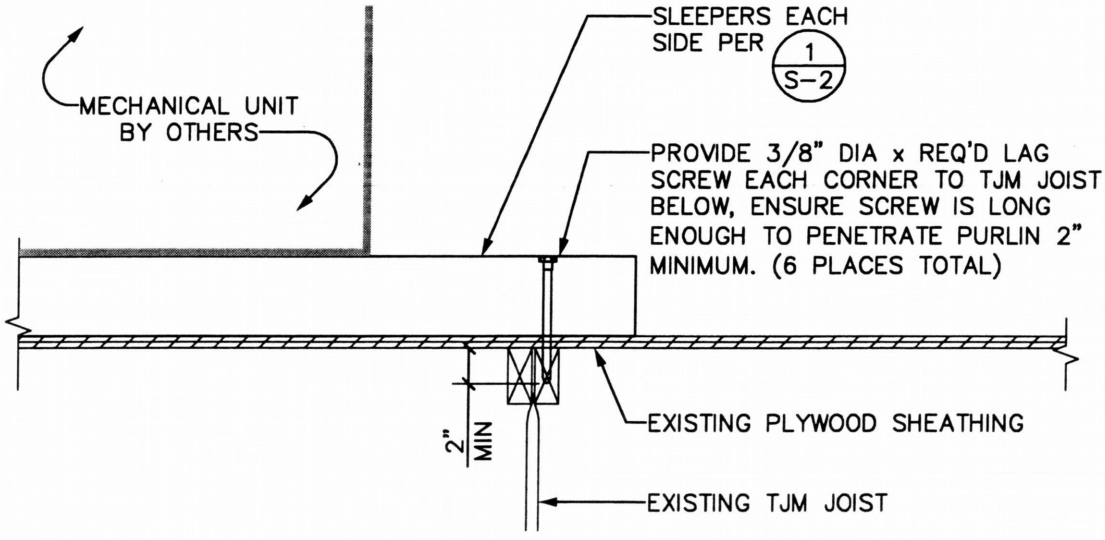

2/S-2 HVAC SLEEPER DETAIL

1" = 1'-0"

NOTE:
CONTRACTOR TO VERIFY EXISTING CONDITIONS AND NOTIFY ENGINEER IF OTHER THAN SHOWN.

20120575 20120575-S7.dwg 30 Nov 2012 - 10:31 am stephens

VLMK CONSULTING ENGINEERS
3933 SW Kelly Avenue • Portland • Oregon 97239-4393
P 503.222.4453
F 503.248.9263
E vlmk@vlmk.com
W www.vlmk.com

2720 NW SHERLOCK TI
2720 NW SHERLOCK AVENUE
PORTLAND, OR

HVAC SLEEPER DETAIL

20120575 PROJ. NO.	11/12 DATE
SMS DRAWN	HGK CHECKED
S-7 SHEET NO	

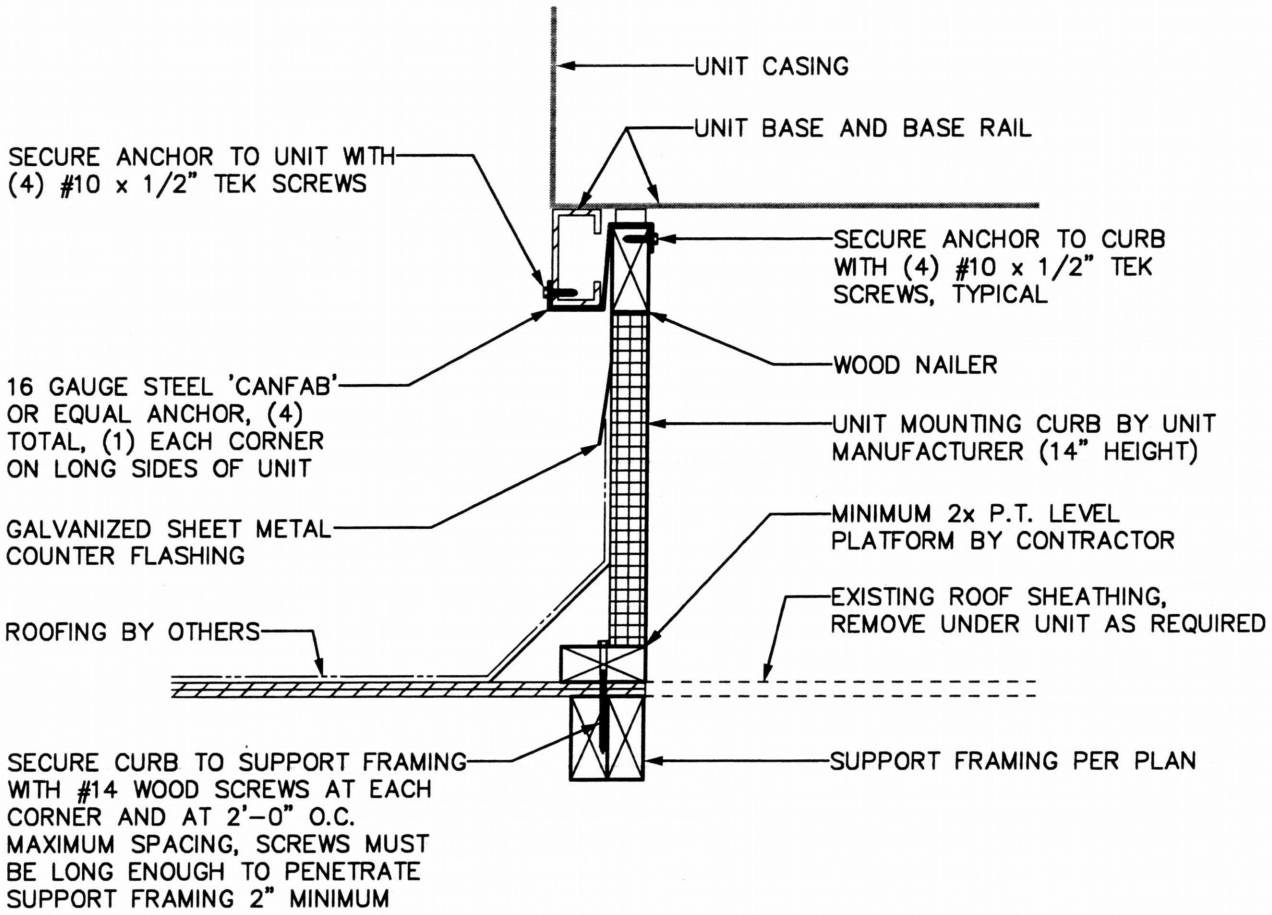

1 / S-8 HVAC CURB DETAIL

1 1/2" = 1'-0"

20120575 20120575-S8.dwg 29 Nov 2012 - 11:31 am stephens

VLMK CONSULTING ENGINEERS
3933 SW Kelly Avenue • Portland • Oregon 97239-4393
P 503.222.4453
F 503.248.9263
E vlmk@vlmk.com
W www.vlmk.com

2720 NW SHERLOCK TI
2720 NW SHERLOCK AVENUE
PORTLAND, OR

HVAC CURB DETAIL

20120575 PROJ. NO.	11/12 DATE
SMS DRAWN	HGK CHECKED
S-8 SHEET NO	

VLMK CONSULTING ENGINEERS
3933 SW Kelly Avenue • Portland • Oregon 97239-4393
P 503.222.4453 503.248.9263 F

Job 2720 NW SHERLOCK TI
Client OREGON BUS. ARCH.
Job No. 20120575 By SMS
Date 11/12 Sheet No. H-1

EXISTING ROOF FRAMING ANALYSIS

CHECK 42" TJM (LARGE UNIT)

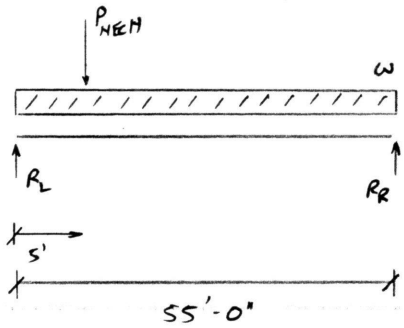

LOADS

$w_D = 12\ psf\ (4') = \underline{48\ plf}$

$w_S = 25\ psf\ (4') = \underline{100\ plf}$

$P_{MECH} = 977^{\#}/(4)\ \text{CORNERS} = \underline{245^{\#}}$

CALCS

$$R_L = \frac{(48+100)plf\,(55')(55'/2) + (245^{\#})(50')}{55'} = \underline{4.29\ k}$$

$$R_R = \frac{(48+100)plf\,(55')(55'/2) + (245^{\#})(5')}{55'} = \underline{4.09\ k}$$

$$\Sigma F_y = 4.29\,k + 4.09\,k - 0.245\,k - (.148)(55') = 0,\ ✓$$

* MAX MOMENT OCCURS $4{,}090^{\#}/(48+100)_{PLF} = \underline{27.6'}$ FROM RIGHT SUPPORT

$$M_{max} = \frac{(148\ plf)(27.6')^2}{2} = \underline{\underline{56.37\ k\text{-}ft}}$$

*FROM LOAD TABLE SEE R-2

$$M_{ALLOW} = \frac{(154\ plf)(55')^2}{8} = \underline{\underline{58.23\ k\text{-}ft}},\ \therefore\ \text{OK FOR ADDITIONAL LOAD}$$

$$V_{ALLOW} = \frac{(154\ plf)(55')}{2} = 4.23\,k,\quad 4.29/4.23 = 1.4\%\ \text{INCREASE} < 5\%$$

$\therefore$ OK

VLMK CONSULTING ENGINEERS
3933 SW Kelly Avenue • Portland • Oregon 97239-4393
P 503.222.4453 503.248.9263 F

Job 2720 NW SHERLOCK TI
Client OREGON BUS. ARCH.
Job No. 2020575 By SHS
Date 11/12 Sheet No. H-2

EXISTING ROOF FRAMING ANALYSIS (CONT.)

CHECK 6 3/4 x 36" GLB (LARGE UNIT)

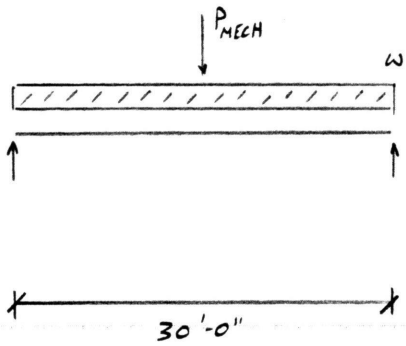

LOADS

$w_D = (12\,psf)(55') = 660\ plf$

$w_S = (25\,psf)(55') = 1375\ plf$

$P_{MECH} = (975\#)$

CALCS

$$M_{MAX} = \frac{wl^2}{8} + \frac{PL}{4} = \frac{(660 + 1375)\,plf\,(30')^2}{8} + \frac{(975\#)(30')}{4} = 236\,k\text{-}ft$$

$$S_{x\text{-}REQD} = \frac{(236\,k\text{-}ft)(12{,}000\ \#/k \cdot in/ft)}{(2{,}400\,psi)(1.15)} = 1{,}026\,in^3$$

$$S_{ALLOW} = \frac{bh^2}{6} = \frac{(6.75'')(36'')^2}{6} = 1{,}458\,in^3 > 1{,}026\,in^3$$

∴ (E) GLB IS OK FOR NEW LOADS

VLMK CONSULTING ENGINEERS
3933 SW Kelly Avenue • Portland • Oregon 97239-4393
P 503.222.4453 503.248.9263 F

Job 2720 NW SHERLOCK TI
Client OREGON BUS. ARCH.
Job No. 20120575 By SMS
Date 11/12 Sheet No. H-3

NEW ROOF FRAMING DESIGN

NEW HEADER LOADING (LARGE UNIT)

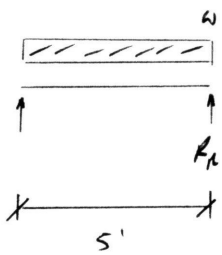

LOADS

$w_D = (12\,psf)(2'/2) = \underline{12\ plf}$

$w_S = (25\,psf)(2'/2) = \underline{25\ plf}$

$R_R = \frac{wL}{2} = \frac{(12+25)_{plf}(5')}{2} = \underline{68^{\#}}$

MAIN SPAN DESIGN

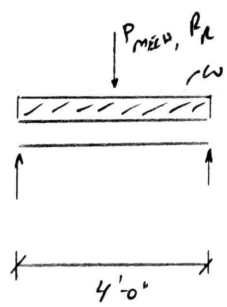

LOADS

$w_D = 12\,psf\,(2') = \underline{24\ plf}$

$w_S = 25\,psf\,(2') = \underline{50\ plf}$

$P_{MECH} = 977^{\#}/4 = \underline{245^{\#}}$, $R_R = \underline{68^{\#}}$

CALCS

$M_{MAX} = \frac{wL^2}{8} + \frac{PL}{4} = \frac{(24+50)_{plf}(4')^2}{8} + \frac{(245^{\#}+68^{\#})(4')}{4} = \underline{461\ ^{\#}\text{-}FT}$

$S_{X\text{-}REQ'D} = \frac{461^{\#\text{-}FT}\,(12''/_{FT})}{(900\,psi)(1.5)} = \underline{\underline{4.10\ in^3}}$

DF #2 CF

USE DOUBLE 2X4 DF #2

($S_X = 6.13\ in^3$)

VLMK CONSULTING ENGINEERS
3933 SW Kelly Avenue • Portland • Oregon 97239-4393
P 503.222.4453 503.248.9263 F

Job 2720 NW Sherlock TI
Client Oregon Bus. Arch.
Job No. 20170575 By SYS
Date 11/12 Sheet No. H-4

NEW ROOF FRAMING DESIGN (cont.)

P.T. SLEEPER DESIGN (SMALL LIMIT ONLY)

NOTES:

- SLEEPERS TO BE LOCATED 15' FROM WALL EDGE
- MAX LOADING PER JOIST FOR 3% INCREASE = 206#

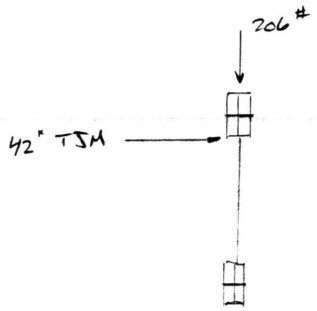

$$\Delta = \frac{1.6 \times 22.5 \left(206^{\#}/55'\right)(55')^4}{10.06 \times 10^6 \times 38.5^2} = 0.08''$$

DEFLECTION EQN PG 9.5 1989 TRUSS DESIGN MANUAL

$$\Delta_{SLEEPER} = 0.08''/2 = 0.04''$$

THE DEFLECTION IN EACH SLEEPER MUST NOT EXCEED 0.04" TO ENSURE APPROPRIATE JOIST LOADING.

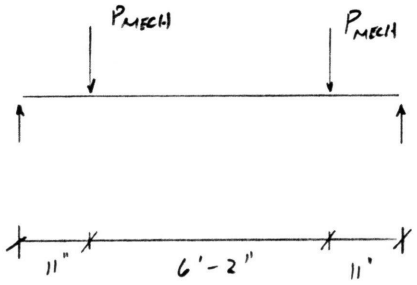

LOADS

$$P_{MECH} = 600^{\#}/(4)\text{ CORNERS} = 150^{\#}$$

CALCS

$$I_{REQ'D} = \frac{150^{\#}(11'')}{24(1{,}300{,}000\ psi)(0.04'')}\left(3(8' \times 12''/1')^3 - 4(11'')^2\right) = 34\ in^4$$

HF #2 Δ_{max}

USE (2) 4X6 P.T. SLEEPERS

($I_{ALLOW} = 48.53\ in^4$)

H-5

USGS Design Maps Summary Report

User–Specified Input

Report Title 2720 NW Sherlock TI
Wed November 28, 2012 15:25:19 UTC

Building Code Reference Document 2006/2009 International Building Code
(which makes use of 2002 USGS hazard data)

Site Coordinates 45.54233°N, 122.6965°W

Site Soil Classification Site Class D – "Stiff Soil"

Occupancy Category Occupancy Category I

USGS–Provided Output

S_S =	0.983 g	S_{MS} =	1.088 g	S_{DS} =	0.725 g
S_1 =	0.347 g	S_{M1} =	0.592 g	S_{D1} =	0.395 g

MCE Response Spectrum

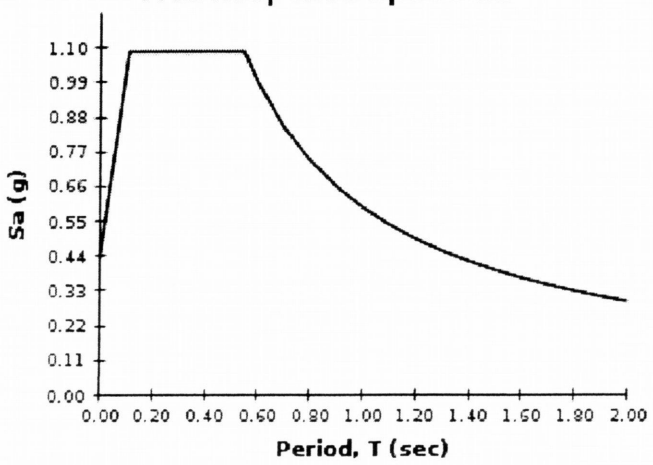

Design Response Spectrum

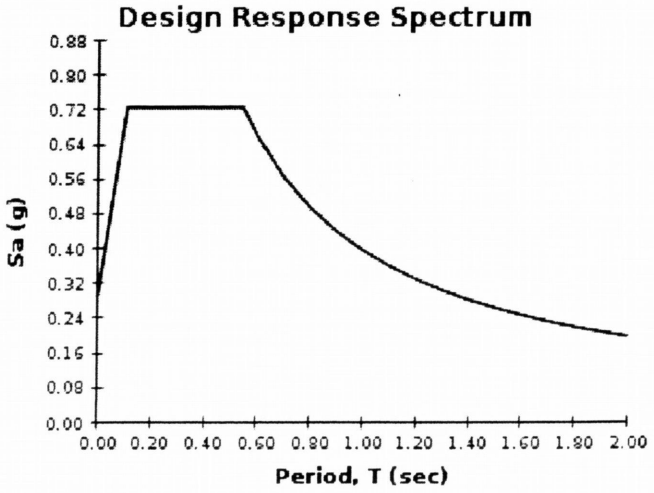

Although this information is a product of the U.S. Geological Survey, we provide no warranty, expressed or implied, as to the accuracy of the data contained therein. This tool is not a substitute for technical subject-matter knowledge.

VLMK CONSULTING ENGINEERS
3933 SW Kelly Avenue · Portland · Oregon 97239-4393
P 503.222.4453
F 503.248.9263
E vlmk@vlmk.com
W www.vlmk.com

Job	NW Sherlock TI
Job No.	20120575
Date	11/12
Sheet No.	H-6

v2.00 - Software Copyright 2010 VLMK Consulting Engineers. All Rights Reserved.

Wind Loads on Rooftop Structures and Equipment

Based on the 2009 International Building Code and ASCE 7-05, 6.5.15.1

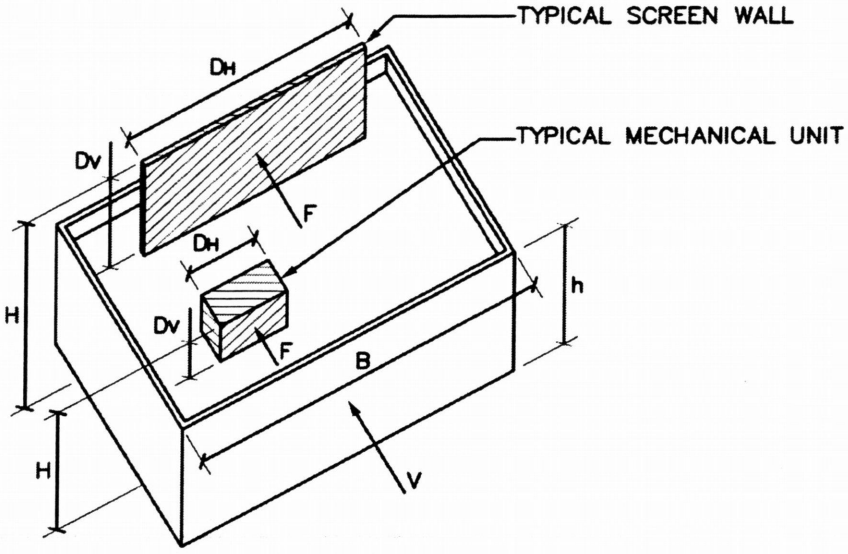

	B	Exposure Category [Section 6.5.6.3]
K_{zt} =	1.00	Topographic Factor [Figure 6-4]
I =	1.00	Importance Factor [Table 6-1]
V =	95 mph	Basic Wind Speed 3-Second Gust [Figure 6-1]
B =	240.00 ft	Horizontal Dimension of Building Measured Normal to the Wind Direction
h =	30.00 ft	Mean Roof Height of Building (Eave Height if Roof Angle < 10°)
Dv =	4.50 ft	Height of Rooftop Structure or Equipment
DH =	7.33 ft	Width of Rooftop Structure or Equipment

H =	34.50 ft	Height to Top of Structure or Equipment
α =	7.0	3-Second Gust-Speed Power Law Exponent [Table 6-2]
zg =	1200 ft	Nominal Height of Atmospheric Boundary Layer [Table 6-2]
Kz =	0.701	Velocity Pressure Exposure Coefficient [Table 6-3]
Kd =	0.90	Wind Directionality Factor [Table 6-4]

$$q_z = 0.00256 K_z K_{zt} K_d V^2 I \qquad \text{[Equation 6-15]}$$

qz =	14.6 psf	Velocity Pressure [Equation 6-15]
G =	0.85	Gust Effect Factor [Section 6.5.8.1]
Cf =	1.3	Force Coefficient [Figure 6-21]
Af =	33.0 sf	Area of Structure Normal to the Wind Direction
Bh =	7200.0 sf	Building Area Normal to the Wind Direction
x =	1.9	Force Increase Factor [Section 6.5.15.1]

$$F = x q_z G C_f A_f \qquad \text{[Equation 6-28 and Section 6.5.15.1]}$$

p = 30.4 psf **Design Wind Pressure**

VLMK CONSULTING ENGINEERS
3933 SW Kelly Avenue · Portland · Oregon 97239-4393
P 503.222.4453
F 503.248.9263
E vlmk@vlmk.com
W www.vlmk.com

Job: NW Sherlock TI
Job No.: 20120575
Date: 11/12
Sheet No.: H-7

v2.10 - Software Copyright 2010 VLMK Consulting Engineers. All Rights Reserved.

Mechanical Unit Anchorage Design (LARGE UNIT)

Based on the 2009 International Building Code and ASCE 7-05

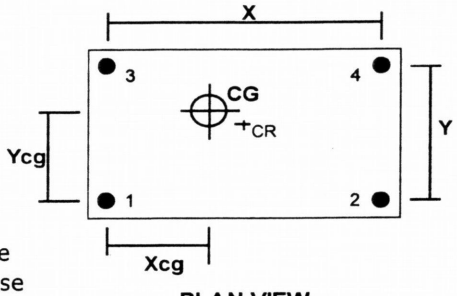

PLAN VIEW

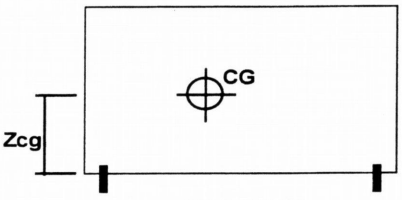

SIDE VIEW

DESIGN INPUT

Seismic Parameters [ASCE 7-05 Section 13.6]

Site Class =	D		(Assumed)
S_{DS} =	0.725		Design spectral response acceleration
Ap =	2.5		[Table 13.6-1 ASCE7-05]
Rp =	6.5		[Table 13.6-1 ASCE7-05]
Ip =	1.00		Importance Factor
z =	30	(ft)	Attachment height from base of structure
h =	30	(ft)	Average roof height of structure from base

Wind Parameters [ASCE 7-05 Section 6.5.15.1]

P =	30.4	(psf)	Design wind pressure (psf)

HVAC Unit Data (+/-)

Wp =	977	(lb)	Machine Weight
X =	88.0	(in)	Base Dimension
Y =	59.5	(in)	Base Dimension
Z =	55.0	(in)	Height of Unit and Curb
Xcg =	42.8	(in)	Center of Gravity
Ycg =	37.5	(in)	Center of Gravity
Zcg =	34.0	(in)	Center of Gravity

Load Combinations

0.9D + (E or 1.6W)	USD
0.6D + (E/1.4 or W)	ASD

ANALYSIS

Base Shear

Seismic

$$F_p = \frac{0.4 a_p S_{DS} W_p}{R_p / I_p}\left(1 + 2\frac{z}{h}\right) = 327 \text{ lbs.}$$

$\leq 1.6 S_{DS} I_p W_p = 1133$ lbs. OK

$\geq 0.3 S_{DS} I_p W_p = 212$ lbs. OK

Base Shear, V_u = 327 lbs.

Wind Fw_u = 1635 lbs.

Controlling Base Shear = 1635 lbs. Wind
= 1022 (asd) Wind

Anchor Shear (Seismic)

Anchor	dx	dx^2	dy	dy^2
1	42.75	1827.6	37.5	1406.3
2	45.25	2047.6	37.5	1406.3
3	42.75	1827.6	22	484
4	45.25	2047.6	22	484
		7750.3		3780.5

Minimum eccentricity = 5%

ex = 3.388 ey = -5.88

Mx-x = 1107 My-y = -1921

Y Direction
$V_{1,3}$ = 88
$V_{2,4}$ = 88

X Direction
$V_{1,2}$ = 63
$V_{3,4}$ = 71

$V_u$max = 409 lbs.
= 255 (asd)
Each Anchor/Corner

Overturning

Mot = 11115 lb-in. seismic
Mot = 44958 lb-in. wind
Mres-x = 37590 lb-in. Mres-y = 19345 lb-in.

Net Bolt Tension X Direction Y Direction
Tx* = 42 Ty* = 215
*negative (-) values indicate there is no net uplift

$T_u$max* = 215 lbs.
= 128 (asd)
Each Anchor/Corner

PROVIDE #14 WOOD SCREWS EACH CORNER AND AT 2'-0" O.C. MAX SPACING

VLMK CONSULTING ENGINEERS
3933 SW Kelly Avenue · Portland · Oregon 97239-4393
P 503.222.4453
F 503.248.9263
E vlmk@vlmk.com
W www.vlmk.com

Job: NW Sherlock TI
Job No.: 20120575
Date: 11/12
Sheet No.: H-8

v2.10 - Software Copyright 2010 VLMK Consulting Engineers. All Rights Reserved.

Mechanical Unit Anchorage Design (SMALL UNIT)

Based on the 2009 International Building Code and ASCE 7-05

DESIGN INPUT

Seismic Parameters [ASCE 7-05 Section 13.6]

Site Class =	D		(Assumed)
S_{DS} =	0.725		Design spectral response acceleration
Ap =	2.5		[Table 13.6-1 ASCE7-05]
Rp =	6.5		[Table 13.6-1 ASCE7-05]
Ip =	1.00		Importance Factor
z =	30	(ft)	Attachment height from base of structure
h =	30	(ft)	Average roof height of structure from base

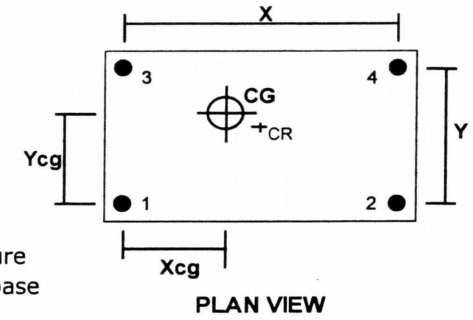

Wind Parameters [ASCE 7-05 Section 6.5.15.1]

P =	30.4	(psf)	Design wind pressure (psf)

HVAC Unit Data (+/-)

Wp =	600	(lb)	Machine Weight
X =	74.0	(in)	Base Dimension
Y =	46.0	(in)	Base Dimension
Z =	40.0	(in)	Height of Unit and Curb
Xcg =	39.0	(in)	Center of Gravity
Ycg =	23.0	(in)	Center of Gravity
Zcg =	17.0	(in)	Center of Gravity

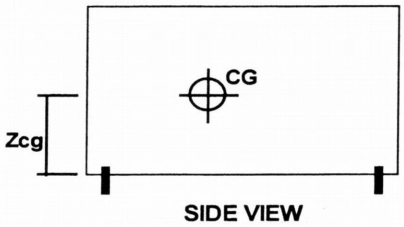

Load Combinations

0.9D + (E or 1.6W)	USD
0.6D + (E/1.4 or W)	ASD

ANALYSIS

Base Shear

Seismic

$$F_p = \frac{0.4 a_p S_{DS} W_p}{R_p / I_p}\left(1 + 2\frac{z}{h}\right) = 201 \quad \text{lbs.}$$

$\leq 1.6 S_{DS} I_p W_p = 696$ lbs. OK

$\geq 0.3 S_{DS} I_p W_p = 131$ lbs. OK

Base Shear, V_u = 201 lbs.

Wind Fw_u = 999.8 lbs.

Controlling Base Shear = 1000 lbs. Wind

= 625 (asd) Wind

Anchor Shear (Seismic)

Anchor	dx	dx^2	dy	dy^2
1	39	1521	23	529
2	35	1225	23	529
3	39	1521	23	529
4	35	1225	23	529
		5492		2116

Minimum eccentricity = 5%

ex = -0.05 ey = 1.15

Mx-x = -10.04 My-y = 230.9

Y Direction: $V_{1,3}$ = 50, $V_{2,4}$ = 50

X Direction: $V_{1,2}$ = 53, $V_{3,4}$ = 53

$V_u$max = 250 lbs.

= 156 (asd)

Each Anchor/Corner

Overturning

Mot = 3413 lb-in. seismic

Mot = 19996 lb-in. wind

Mres-x = 18900 lb-in. Mres-y = 12420 lb-in.

Net Bolt Tension

X Direction: Tx* = 7

Y Direction: Ty* = 82

*negative (-) values indicate there is no net uplift

$T_u$max* = 82 lbs.

= 46 (asd)

Each Anchor/Corner

USE #12 SCREWS AT EACH CORNER AND AT 24" O.C. MAX SPACING FROM UNIT TO NEW P.T. SLEEPER. PROVIDE (1) 3/8" DIA x REQ'D LAG SCREW FROM P.T. SLEEPER TO EACH TJM JOIST, (6) TOTAL

VLMK CONSULTING ENGINEERS
3933 SW Kelly Avenue • Portland • Oregon 97239-4393
P 503.222.4453 503.248.9263 F

Job NW SHERLOCK T.I.
Client OREGON BUSINESS ARCH.
Job No. 70120575 By SMS
Date 11/12 Sheet No. C-1

CONCRETE RAMP RAILING DESIGN

RAIL SUPPORT DESIGN

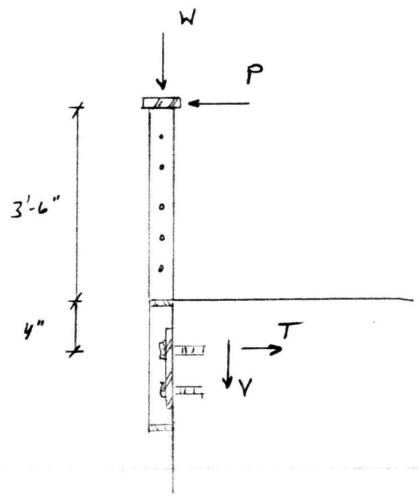

LOADS

$P_L = 200^{\#}$ [PER OSSC 1607.7]

$W_D = 21^{\#}$ [BARS]

$16^{\#}$ [SELF-WT.]

$15^{\#}$ [BOT. HORIZONTAL BAR]

$35^{\#}$ [TOP HORIZONTAL BAR]

$87^{\#}$

CALCS

$M_{max} = P \cdot L = (200^{\#})(3'\text{-}10") = 766^{\#\text{-}FT}$

$\frac{L_b \cdot d}{t^2} = 460 > \frac{0.08E}{F_y}$ AND $< \frac{1.9E}{F_y}$, ∴ USE EQN (F11-2)

$M_n = C_b\left[1.52 - 0.274\left(\frac{L_b \cdot d}{t^2}\right)\left(\frac{F_y}{E}\right)\right]M_y \le M_p$

$= 1.0\left[1.52 - 0.274(460)(0.0012)\right](36\,ksi)\left(\frac{0.5(2.5)^2}{6}\right) = 25.6\ k\text{-}in$

$M_n/\Omega = \frac{25\ k\text{-}in\left(\frac{1000^{\#}}{k} \cdot \frac{1\,FT}{12\,in}\right)}{1.67} = 1{,}247^{\#\text{-}FT} > 766^{\#\text{-}FT}$

∴ USE ½" x 2½" BAR

VLMK CONSULTING ENGINEERS
3933 SW Kelly Avenue • Portland • Oregon 97239-4393
P 503.222.4453 503.248.9263 F

Job NW Sherlock TI
Client OREGON BUS. ARCH.
Job No. 20120575 By SMS
Date 11/12 Sheet No. C-2

CONCRETE RAMP RAILING DESIGN (CONT.)

ANCHOR DESIGN (4 BOLT CONDITION)

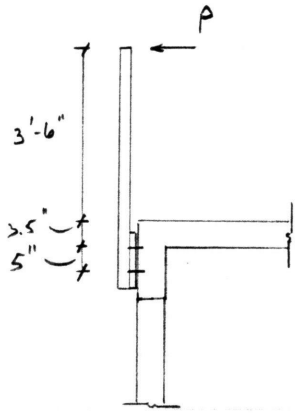

$P = 200^{\#}$

$M_{max} = 200^{\#}(3'\text{-}6" + 3.5") = 9{,}100^{\#\,in}$

$T_{max} = M_{max}/5" = 1{,}820^{\#}$ (ASD)

$2{,}548^{\#}$ (ULT)

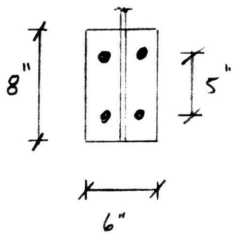

RESULTS

USE (4) ½" DIA x 3" MIN
EMBED CONCRETE SCREW ANCHORS
(SEE ATTACHED C-3 AND C-4)

ANCHOR DESIGN (2-BOLT CORNER CONDITION)

$P = 200^{\#}/(3)$ UPRIGHTS (ASSUME LOAD IS RESISTED BY (3) VERTICAL BARS)

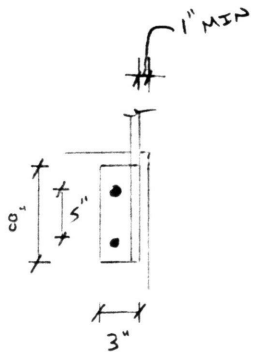

$M_{max} = (66^{\#})(3'\text{-}6" + 3.5") = 3000^{\#\text{-}in}$

$T_{max} = 3000^{\#\,in}/5" = 600^{\#}$ (ASD)

$840^{\#}$ (ULT)

RESULTS

USE (2) ½" DIA x 3" MIN
EMBED CONCRETE SCREW ANCHORS
(SEE ATTACHED C-5 AND C-6)

C-3

Company:	VLMK Consulting Engineers	Page:	1
Specifier:	Stephen M. Stenberg	Project:	2720 NW Sherlock Tl
Address:	3933 SW Kelly Avenue	Sub-Project I Pos. No.:	
Phone I Fax:	503.222.4453 |	Date:	11/30/2012
E-Mail:	stephens@vlmk.com		

Specifier's comments: Railing Anchorage

1 Input data

Anchor type and diameter:	**KWIK HUS-EZ (KH-EZ) 1/2 (3)**
Effective embedment depth:	h_{ef} = 2.160 in., h_{nom} = 3.000 in.
Material:	Carbon Steel
Evaluation Service Report::	ESR 3027
Issued I Valid:	6/1/2012 | 12/1/2012
Proof:	design method ACI 318 / AC193
Stand-off installation:	e_b = 0.000 in. (no stand-off); t = 0.250 in.
Anchor plate:	l_x x l_y x t = 8.000 in. x 6.000 in. x 0.250 in.; (Recommended plate thickness: not calculated)
Profile:	no profile
Base material:	cracked concrete, 2500, f_c' = 2500 psi; h = 6.000 in.
Reinforcement:	tension: condition B, shear: condition B; no supplemental splitting reinforcement present edge reinforcement: none or < No. 4 bar
Seismic loads (cat. C, D, E, or F)	no

Geometry [in.] & Loading [lb, in.lb]

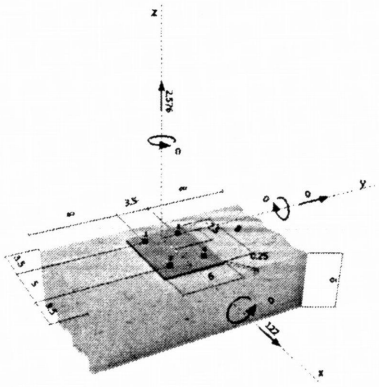

2 Proof I Utilization (Governing Cases)

		Design values [lb]		Utilization	
Loading	**Proof**	**Load**	**Capacity**	β_N / β_V [%]	**Status**
Tension	Concrete Breakout Strength	2856	3026	95 / -	OK
Shear	Concrete edge failure in direction x+	122	2027	- / 7	OK

Loading	β_N	β_V	ζ	Utilization $\beta_{N,V}$ [%]	Status
Combined tension and shear loads	0.944	0.060	1.0	84	OK

3 Warnings

- Please consider all details and hints/warnings given in the detailed report!

Fastening meets the design criteria!

PROFIS Anchor (c) 2003-2009 Hilti AG, FL-9494 Schaan Hilti is a registered Trademark of Hilti AG, Schaan

Company:	VLMK Consulting Engineers	Page:	2
Specifier:	Stephen M. Stenberg	Project:	2720 NW Sherlock Tl
Address:	3933 SW Kelly Avenue	Sub-Project I Pos. No.:	
Phone I Fax:	503.222.4453 |	Date:	11/30/2012
E-Mail:	stephens@vlmk.com		

4 Remarks; Your Cooperation Duties

- Any and all information and data contained in the Software concern solely the use of Hilti products and are based on the principles, formulas and security regulations in accordance with Hilti's technical directions and operating, mounting and assembly instructions, etc., that must be strictly complied with by the user. All figures contained therein are average figures, and therefore use-specific tests are to be conducted prior to using the relevant Hilti product. The results of the calculations carried out by means of the Software are based essentially on the data you put in. Therefore, you bear the sole responsibility for the absence of errors, the completeness and the relevance of the data to be put in by you. Moreover, you bear sole responsibility for having the results of the calculation checked and cleared by an expert, particularly with regard to compliance with applicable norms and permits, prior to using them for your specific facility. The Software serves only as an aid to interpret norms and permits without any guarantee as to the absence of errors, the correctness and the relevance of the results or suitability for a specific application.
- You must take all necessary and reasonable steps to prevent or limit damage caused by the Software. In particular, you must arrange for the regular backup of programs and data and, if applicable, carry out the updates of the Software offered by Hilti on a regular basis. If you do not use the AutoUpdate function of the Software, you must ensure that you are using the current and thus up-to-date version of the Software in each case by carrying out manual updates via the Hilti Website. Hilti will not be liable for consequences, such as the recovery of lost or damaged data or programs, arising from a culpable breach of duty by you.

PROFIS Anchor (c) 2003-2009 Hilti AG, FL-9494 Schaan Hilti is a registered Trademark of Hilti AG, Schaan

C-5

Company:	VLMK Consulting Engineers	Page:	1
Specifier:	Stephen M. Stenberg	Project:	2720 NW Sherlock Tl
Address:	3933 SW Kelly Avenue	Sub-Project I Pos. No.:	
Phone I Fax:	503.222.4453 |	Date:	11/30/2012
E-Mail:	stephens@vlmk.com		

Specifier's comments: Railing Anchorage

1 Input data

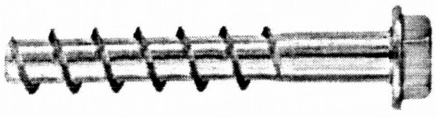

Anchor type and diameter:	**KWIK HUS-EZ (KH-EZ) 1/2 (3)**
Effective embedment depth:	h_{ef} = 2.160 in., h_{nom} = 3.000 in.
Material:	Carbon Steel
Evaluation Service Report::	ESR 3027
Issued I Valid:	6/1/2012 | 12/1/2012
Proof:	design method ACI 318 / AC193
Stand-off installation:	e_b = 0.000 in. (no stand-off); t = 0.250 in.
Anchor plate:	l_x x l_y x t = 8.000 in. x 3.000 in. x 0.250 in.; (Recommended plate thickness: not calculated)
Profile:	no profile
Base material:	cracked concrete, 2500, f_c' = 2500 psi; h = 6.000 in.
Reinforcement:	tension: condition B, shear: condition B; no supplemental splitting reinforcement present edge reinforcement: none or < No. 4 bar
Seismic loads (cat. C, D, E, or F)	no

Geometry [in.] & Loading [lb, in.lb]

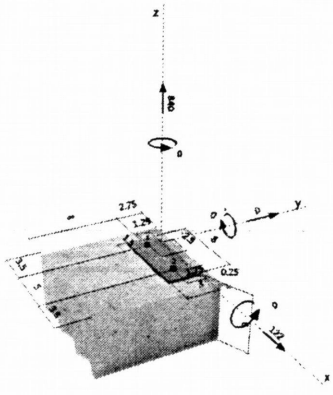

2 Proof I Utilization (Governing Cases)

		Design values [lb]		Utilization	
Loading	**Proof**	**Load**	**Capacity**	**β_N / β_V [%]**	**Status**
Tension	Concrete Breakout Strength	2015	2431	83 / -	OK
Shear	Concrete edge failure in direction x+	127	993	- / 13	OK

Loading	**β_N**	**β_V**	**ζ**	**Utilization $\beta_{N,V}$ [%]**	**Status**
Combined tension and shear loads	0.829	0.128	5/3	77	OK

3 Warnings

- Please consider all details and hints/warnings given in the detailed report!

Fastening meets the design criteria!

PROFIS Anchor (c) 2003-2009 Hilti AG, FL-9494 Schaan Hilti is a registered Trademark of Hilti AG, Schaan

Company:	VLMK Consulting Engineers	Page:	2
Specifier:	Stephen M. Stenberg	Project:	2720 NW Sherlock Tl
Address:	3933 SW Kelly Avenue	Sub-Project I Pos. No.:	
Phone I Fax:	503.222.4453 |	Date:	11/30/2012
E-Mail:	stephens@vlmk.com		

4 Remarks; Your Cooperation Duties

- Any and all information and data contained in the Software concern solely the use of Hilti products and are based on the principles, formulas and security regulations in accordance with Hilti's technical directions and operating, mounting and assembly instructions, etc., that must be strictly complied with by the user. All figures contained therein are average figures, and therefore use-specific tests are to be conducted prior to using the relevant Hilti product. The results of the calculations carried out by means of the Software are based essentially on the data you put in. Therefore, you bear the sole responsibility for the absence of errors, the completeness and the relevance of the data to be put in by you. Moreover, you bear sole responsibility for having the results of the calculation checked and cleared by an expert, particularly with regard to compliance with applicable norms and permits, prior to using them for your specific facility. The Software serves only as an aid to interpret norms and permits without any guarantee as to the absence of errors, the correctness and the relevance of the results or suitability for a specific application.
- You must take all necessary and reasonable steps to prevent or limit damage caused by the Software. In particular, you must arrange for the regular backup of programs and data and, if applicable, carry out the updates of the Software offered by Hilti on a regular basis. If you do not use the AutoUpdate function of the Software, you must ensure that you are using the current and thus up-to-date version of the Software in each case by carrying out manual updates via the Hilti Website. Hilti will not be liable for consequences, such as the recovery of lost or damaged data or programs, arising from a culpable breach of duty by you.

PROFIS Anchor (c) 2003-2009 Hilti AG, FL-9494 Schaan Hilti is a registered Trademark of Hilti AG, Schaan

VLMK CONSULTING ENGINEERS
3933 SW Kelly Avenue • Portland • Oregon 97239-4393
P 503.222.4453 503.248.9263 F

Job NW SHERLOCK T.I.
Client OREGON BUS. ARCH
Job No. 20120575 By SMS
Date 12/12 Sheet No. C-7

1 - 12/06/12 "NEW SHEET"

LATERAL ANALYSIS (IN-PLANE)

WIND

$w = (17.5\ psf)(29'/2) = \underline{253\ plf}$ [SEE ATTACHED]

SEISMIC - (CONTROLS)

$S_{DS} = 0.725$

$R = 5$

$I = 1.0$

$C_s = S_{DS}/(R/I) = 0.725/(5/1) = 0.145/1.4 = \underline{0.104}$ (ASD)

$w_{ROOF} = \underline{15\ psf}$

$w_{WALL} = 150\ lb/ft^3\ (7''/12) = \underline{88\ psf}$ [7" THICK WALL, SEE R-10]

N/S DIRECTION

$w_4 = [15\ psf\ (110') + 88\ psf\ (29'/2)(2)](0.104) = \underline{437\ plf}$

$w_3 = [15\ psf\ (55') + 88\ psf\ (29'/2)(2)](0.104) = \underline{351\ plf}$

E/W DIRECTION

$w_2 = [15\ psf\ (150') + 88\ psf\ (29'/2)(2)](0.104) = \underline{500\ plf}$

$w_1 = [15\ psf\ (90') + 88\ psf\ (29'/2)(2)](0.104) = \underline{405\ plf}$

SHEAR LOADS TO WALLS

N/S : $V_4 = (351\ plf)(90'/2) = 15.8\ k$: $55'$ = $v_4 = \underline{287\ plf}$

$V_5 = (351\ plf + 437\ plf)(120') = 94.6\ k$: $110'$ = $v_5 = \underline{860\ plf}$

$V_6 = (437\ plf)(75') = 32.8\ k$: $110'$ = $v_6 = \underline{300\ plf}$

VLMK CONSULTING ENGINEERS
3933 SW Kelly Avenue · Portland · Oregon 97239-4393
P 503.222.4453
F 503.248.9263
E vlmk@vlmk.com
W www.vlmk.com

Job	NW Sherlock TI
Job No.	20120575
Date	12/12
Sheet No.	C - 8

v2.00 - Software Copyright 2010 VLMK Consulting Engineers. All Rights Reserved.

Wind Loads - Main Wind-Force Resisting Systems

Based on the 2009 International Building Code and ASCE 7-05, 6.4 (Method 1 - Simplified Procedure)

1 - 12/06/12
"NEW SHEET"

	B	Exposure Category [Section 6.5.6.3]
K_{zt} =	1.00	Topographic Factor [Figure 6-4]
I =	1.00	Importance Factor [Table 6-1]
Roof Slope =	0 to 5	Degrees
V =	105 mph	Basic Wind Speed 3-Second Gust [Figure 6-1]

Per ASCE 7-05, 6.4.2.1 and Figure 6-2

Horizontal Loads

Height (ft)	Adjustment λ	End Zones (psf)		Interior Zones (psf)	
		Wall (A)	Roof (B)	Wall (C)	Roof (D)
15	1.00	17.5	-9.0	11.6	-5.4
20	1.00	17.5	-9.0	11.6	-5.4
25	1.00	17.5	-9.0	11.6	-5.4
30	1.00	17.5	-9.0	11.6	-5.4
35	1.05	18.4	-9.5	12.2	-5.7
40	1.09	19.1	-9.8	12.6	-5.9
45	1.12	19.6	-10.1	13.0	-6.0
50	1.16	20.3	-10.4	13.5	-6.3
55	1.19	20.8	-10.7	13.8	-6.4
60	1.22	21.4	-11.0	14.2	-6.6

Vertical Loads

Height (ft)	Adjustment λ	End Zones (psf)		Interior Zones (psf)		Windward Overhang (psf)	
		Windward Roof (E)	Leeward Roof (F)	Windward Roof (G)	Leeward Roof (H)	Windward Roof (E_{OH})	Windward Roof (G_{OH})
15	1.00	-21.1	-11.9	-14.7	-9.3	-29.4	-23.0
20	1.00	-21.1	-11.9	-14.7	-9.3	-29.4	-23.0
25	1.00	-21.1	-11.9	-14.7	-9.3	-29.4	-23.0
30	1.00	-21.1	-11.9	-14.7	-9.3	-29.4	-23.0
35	1.05	-22.2	-12.5	-15.4	-9.8	-30.9	-24.2
40	1.09	-23.0	-13.0	-16.0	-10.1	-32.0	-25.1
45	1.12	-23.6	-13.3	-16.5	-10.4	-32.9	-25.8
50	1.16	-24.5	-13.8	-17.1	-10.8	-34.1	-26.7
55	1.19	-25.1	-14.2	-17.5	-11.1	-35.0	-27.4
60	1.22	-25.7	-14.5	-17.9	-11.3	-35.9	-28.1

VLMK CONSULTING ENGINEERS
3933 SW Kelly Avenue • Portland • Oregon 97239-4393
P 503.222.4453 503.248.9263 F

Job NW SHERLOCK T.I.
Client OREGON BUS. ARCH
Job No. 20120575 By SMS
Date 12/12 Sheet No. C-9

1 - 12/06/12 "NEW SHEET"

LATERAL ANALYSIS (IN-PLANE CONT.)

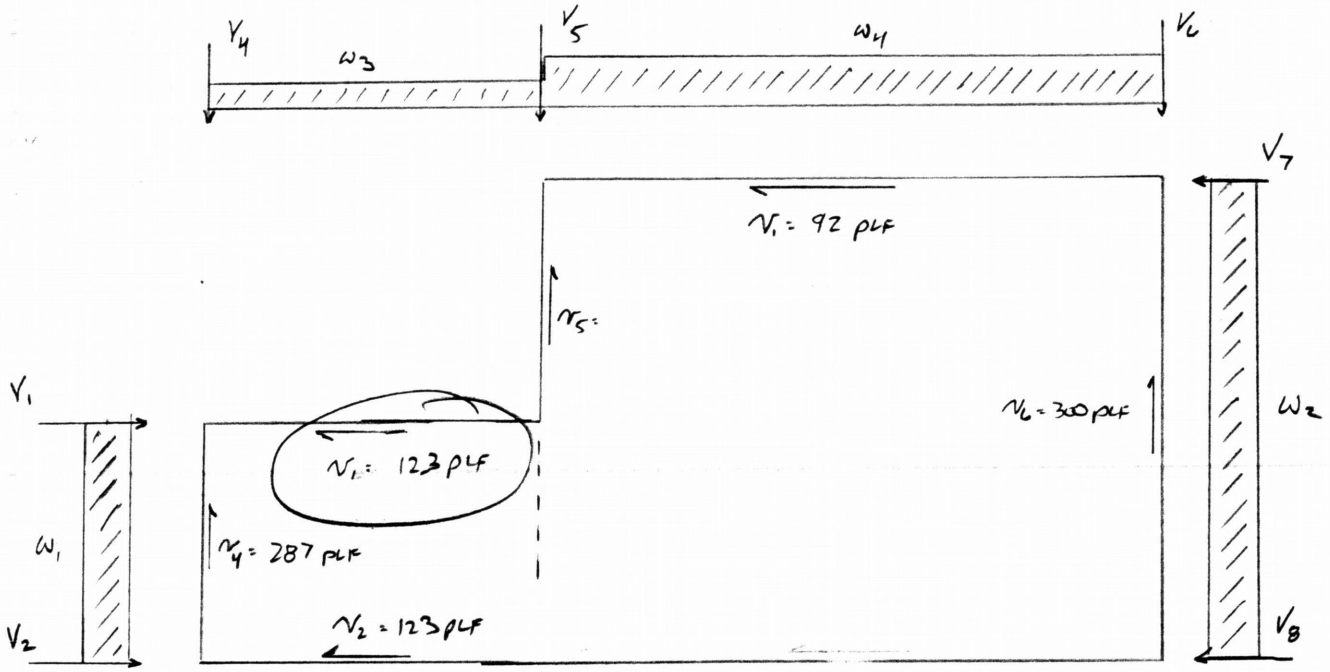

N 1/C- LATERAL LOAD DIAGRAM NTS

SHEAR LOADS (CONT.)

E/W: $V_1 = (405\,plf)(55'/2) = 11.2k : 90' = v_1 = \underline{123\,plf}$

SEE FOLLOWING SHEET FOR THE SHEARS AND RIGIDITY ANALYSIS

VLMK CONSULTING ENGINEERS
3933 SW Kelly Avenue · Portland · Oregon 97239-4314
P 503.222.4453
F 503.248.9263
E vlmk@vlmk.com
W www.vlmk.com

Job Name: NW Sherlock TI
Job Number: 20120575
Page Number: C - 10

1 - 12/06/12 "NEW SHEET"

North Wall - Shears and Rigidity Analysis

f'c = 4000

Panel 1

wall thickness (in.)= 7

Pier Rigidity		h (ft)	d (ft)		
+ total Section		29.00	30.00		delta C = 0.651319
- bot segment		14.00	30.00		delta F = -0.15016
+ piers	A	14.00	3.00	Rf = 0.086483	
	B	14.00	3.00	Rf = 0.086483	
					delta F of piers = 5.781481
					6.283
					Total R = 0.16

Distribution of Shear

Total Shear = 1510.1 lb

V (lbs)	v (plf)	Mot (lb-ft)	fv (psi)	chord T=C
755.0	251.7	5285.2	3.0	1761.7
755.0	251.7	5285.2	3.0	1761.7

Panel Mot = ***49.8*** *K'*
Panel Mres = ***515.0*** *K'*
Uplift/Compression = ***15.5*** *K* *

* Positive Results = No Overturning

Panels 2-3

wall thickness (in.)= 7

Pier Rigidity		h (ft)	d (ft)		
+ total Section		29.00	20.00		delta C = 1.65445
- bot segment		11.00	20.00		delta F = -0.18164
+ piers	A	11.00	3.00	Rf = 0.165848	
	B	11.00	3.00	Rf = 0.165848	
					delta F of piers = 3.014815
					4.488
					Total R = 0.22

Distribution of Shear

Total Shear = 2114.1 lb

V (lbs)	v (plf)	Mot (lb-ft)	fv (psi)	chord T=C
1057.0	352.3	5813.7	4.2	1937.9
1057.0	352.3	5813.7	4.2	1937.9

Panel Mot = ***69.8*** *K'*
Panel Mres = ***265.7*** *K'*
Uplift/Compression = ***9.8*** *K* *

* Positive Results = No Overturning

Panel 4

wall thickness (in.)= 7

Pier Rigidity		h (ft)	d (ft)		
+ total Section		29.00	20.00		delta C = 1.65445
- bot segment		11.00	20.00		delta F = -0.18164
+ piers	A	11.00	3.00	Rf = 0.165848	
	B	10.00	13.00	Rf = 3.61944	
					delta F of piers = 0.264181
					1.737
					Total R = 0.58

Distribution of Shear

Total Shear = 5461.8 lb

V (lbs)	v (plf)	Mot (lb-ft)	fv (psi)	chord T=C
239.3	79.8	1316.2	0.9	438.7
5222.5	401.7	26112.6	4.8	2008.7

Panel Mot = ***180.2*** *K'*
Panel Mres = ***316.6*** *K'*
Uplift/Compression = ***6.8*** *K* *

* Positive Results = No Overturning

* SEE FOLLOWING SHEET FOR PANEL DESIGNATION

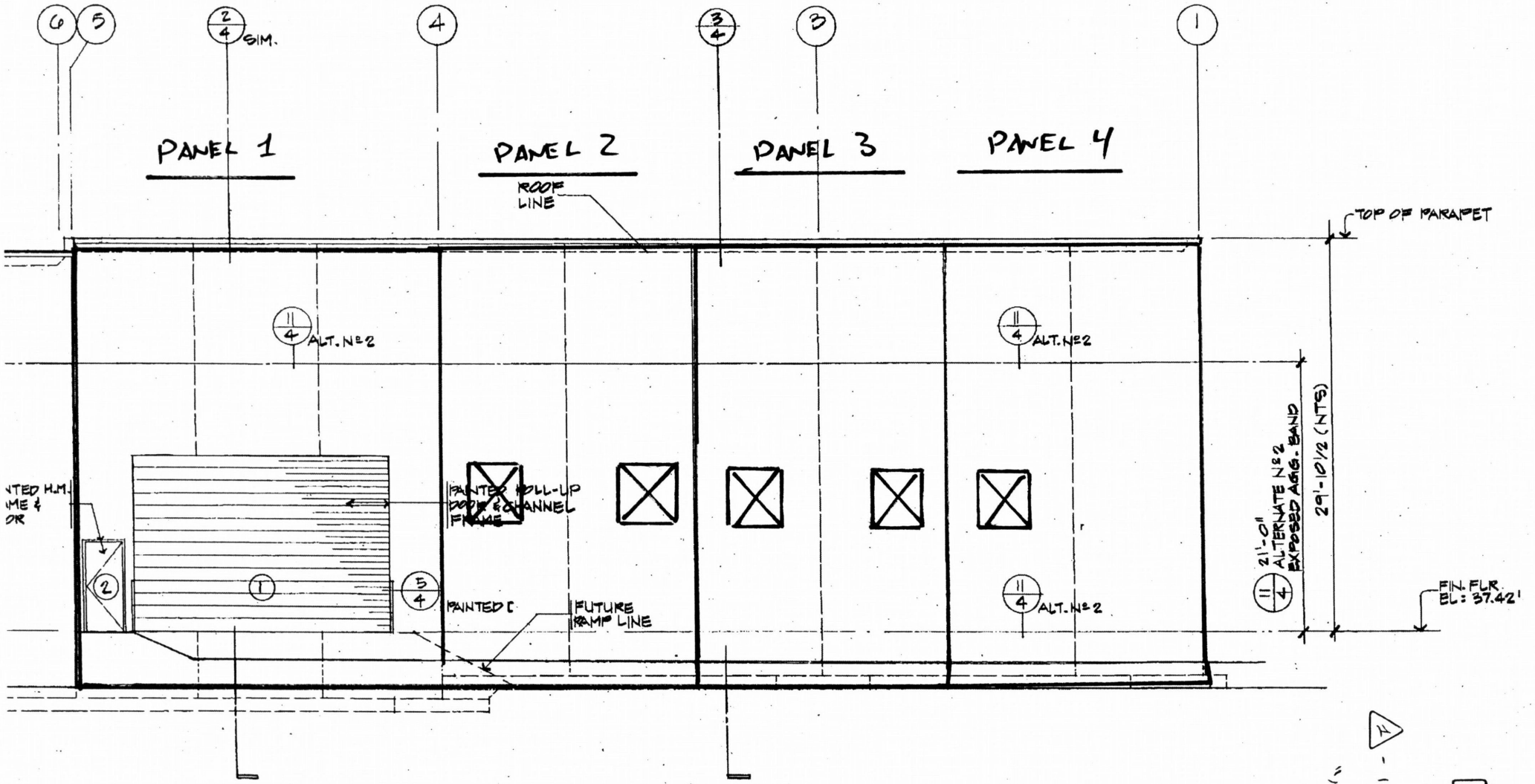

4 - 12/06/12
"NEW SHEET"

C-11

VLMK CONSULTING ENGINEERS
3933 SW Kelly Avenue • Portland • Oregon 97239-4393
P 503.222.4453 503.248.9263 F

Job NW Sherlock II
Client Oregon Bus. Arch.
Job No. 20120575 By SMS
Date 12/12 Sheet No. C-12

1 - 12/06/12 "NEW SHEET"

LATERAL ANALYSIS (OUT-OF-PLANE)

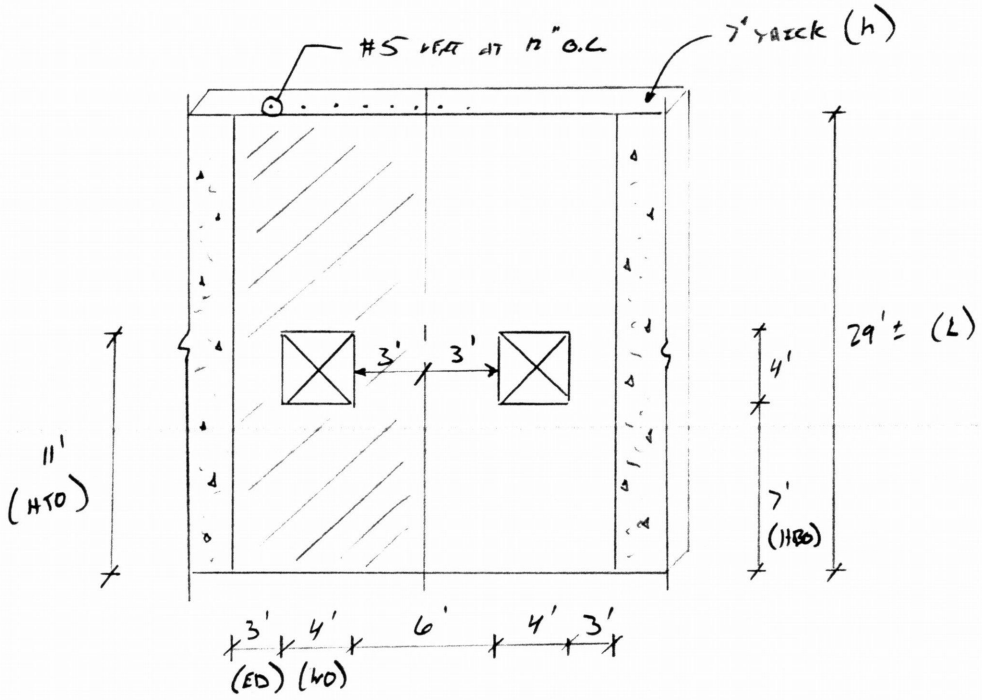

- INDICATES WALL SECTION ANALYZED ON THE FOLLOWING SHEET.

* WIND SPEED = 105 MPH [EXPOSURE TO COLUMBIA RIVER]
* ZONE 5 = END ZONE ANALYSIS

RESULTS

BASED OFF THE FINDINGS ON SHEET C-10 AND C-13, THE EXISTING CONCRETE TILT PANELS ARE ADEQUATE TO WITHSTAND IN-PLANE AND OUT-OF-PLANE FORCES.

VLMK CONSULTING ENGINEERS
3933 SW Kelly Avenue · Portland · Oregon 97239-4314
P 503.222.4453
F 503.248.9263
E vlmk@vlmk.com
W www.vlmk.com

Job Name NW Sherlock TI
Job No. 20120575
Sheet No. C - 13

v 2.31 - Based on 2003 IBC. Software Copyright 1999, 2004 VLMK Consulting Engineers. All Rights Reserved.

INPUT

Note: This program assumes that a section of the panel "ED" each side of the opening resists the additional loads from the opening. The additional portion of the wider pier should be designed as a typical wall section without openings.

Mark 1
12/06/12

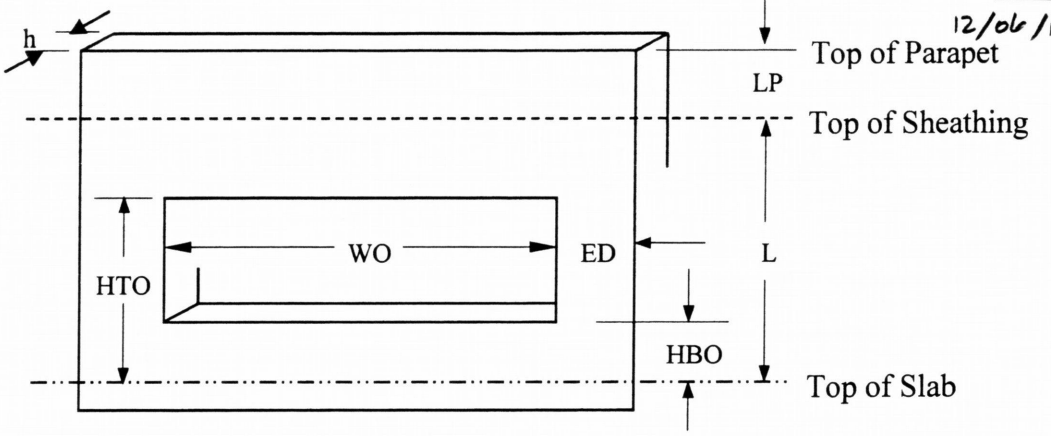

GEOMETRY

LP =	0.00	feet
L =	29.00	feet
WO =	4.00	feet
HTO =	11.00	feet
HBO =	7.00	feet
ED =	3.00	feet
h =	7.00	inches

SUPERIMPOSED LOADS

e =	0.00	inches	eccentricity (from CL of wall)
D =	0.00	k/foot	service dead load
L =	0.00	k/foot	service live load
Lr or S =	0.00	k/foot	service roof live or snow load
f1 =	0.5		load factor (IBC 1605.2.1)
f2 =	0.2		load factor (IBC 1605.2.1)

WIND

Speed = 105	3-second gust (IBC Table 1609.3.1)
Exp.= B	wind exposure (IBC 1609.4)
Iw = 1.00	importance factor (IBC 1604.5)
Zone = 5	interior zone=4, end zone=5

SEISMIC

Sds = 0.73	short period spectral response accel.
Ip = 1.00	importance factor (IBC 1604.5)

BASE FIXITY AND REINFORCING

k =	0.90		(fixed at base)0.75-->1.0(pinned)
d =	3.50	inches	depth to reinforcing
f'c =	4.00	ksi	concrete stress
fy =	60.00	ksi	steel stress
2 faces?	no	yes/no	is there steel on two faces?
As =	0.310	sq. in.	area of steel per running foot of wall

LOAD COMBINATIONS

1.2D + 1.6L + 0.5(Lr or S)	(IBC 16-2)
1.2D+1.6(Lr or S)+(f1L or 0.8W)	(IBC 16-3)
1.2D +/- 1.6W+f1L+0.5(Lr or S)	(IBC 16-4)
1.2D +/- 1.0E +f1L + f2S	(IBC 16-5)
0.9D +/- (1.0E or 1.6W)	(IBC 16-6)

OUTPUT

Total As =	0.930	sq. in.---> TOTAL AREA OF REINF. REQUIRED EA. SIDE. USE ------>
k used =	0.900	
kL/h =	44.743	----------> OK, kL/h <= 50
Rho =	0.007	----------> OK, Rho <= 0.6 RhoB (ACI 14.8.2.3)
DeflS =	0.318	inches -> OK, Service defl. < L/150 (ACI 14.8.4)
FaMAX =	0.240	ksi ------> (= 0.06 F'c per ACI 14.8.2.6)
faSVC =	0.034	ksi ------> OK, Vert. serv. load stress <= 0.06 F'c
Ms =	31.139	in-kips
phiMn =	61.490	in-kips
+MuMAX =	56.498	in-kips -> OK, Maximum Positive Mu <= phiMn (ACI 14.8.3)
MuBASE =	27.900	in-kips -> OK, Mu @ Slab Level <= phiMn (ACI 14.8.3)
MuHTO =	48.370	in-kips -> OK, Mu @ Top of Opening <= phiMn (ACI 14.8.3)
MuHBO =	29.924	in-kips -> OK, Mu @ Btm of Opening <= phiMn (ACI 14.8.3)
Mcr =	46.485	in-kips -> OK, Mcr < phiMn (ACI 14.8.2.4)

- ☐ (3) #5 BARS AT CENTER (As=0.93 sq.in.)
- ☐ (3) #6 BARS AT CENTER (As=1.32 sq.in.)
- ☐ (2) #7 BARS AT CENTER (As=1.2 sq.in.)
- ☐ OTHER:

#4 BARS AT 12" O.C. (HORIZONTAL)

#5 BARS AT 12" O.C. (VERT.)

FOR REFERENCE ONLY

R-1

TJL, TJLX, TJW Truss

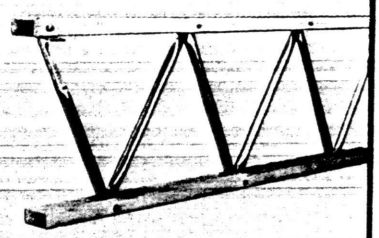

Top and Bottom Chords:
TJL Truss – 1.5″ x 3.5″ machine stress rated lumber. TJW Truss – 1.5″ x 4.75″ machine stress related lumber.

Webs: 1″ and 1⅛″diameter tubular steel members varying in gauge and diameter according to requirements. 45,000 PSI minimum yield.

Weight:
TJL, TJLX Truss: 3.75 to 4.25 lbs./ft.
TJW Truss: 4.5 to 5.25 lbs./ft.

Depths:

Minimum depth @ wall	14″
Maximum depth @ wall	50″
Maximum pitched ℄ depth	50″

Any depth between minimum and maximum is available.

TJ/60 Truss

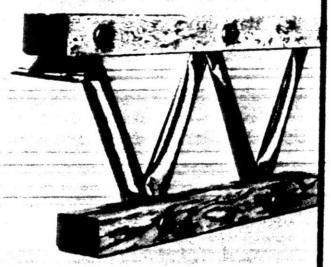

Top and Bottom Chords:
Double 1.5″ by 2.3″ MICRO=LAM laminated veneer lumber

Webs: 1″, 1¼″ and 1½″ diameter tubular steel members varying in gauge and diameter according to requirements. 45,000 PSI minimum yield

Weight:
4.75 to 5.75 lbs./ft.

Depths:

Min. depth @ wall	16″
Max. depth @ wall	64″
Max. pitched ℄ depth	84″

Any depth between minimum and maximum is available.

TJM, TJH Truss

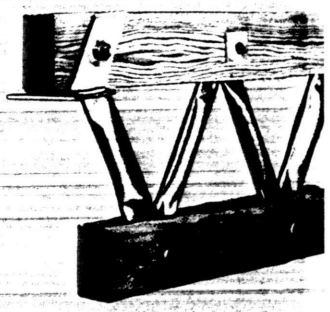

Top and Bottom Chords: TJM Truss - Double 1.5″ x 3.5″ machine stress rated lumber
TJH Truss - Double 1.5″ x 5.5″ machine stress rated lumber

Webs: Up to 2″ diameter tubular steel members varying in gauge and diameter according to requirements. 45,000 PSI minimum yield

Weight: TJM Truss – 8 to 9 lbs./ft.
TJH Truss – 10 to 12 lbs./ft.

Depths:	TJM Truss	TJH Truss
Min. depth @ wall	20″	24″
Max. depth @ wall	60″	72″
Max. pitched ℄ depth	72″	114″

Any depth between minimum and maximum is available.

Profiles

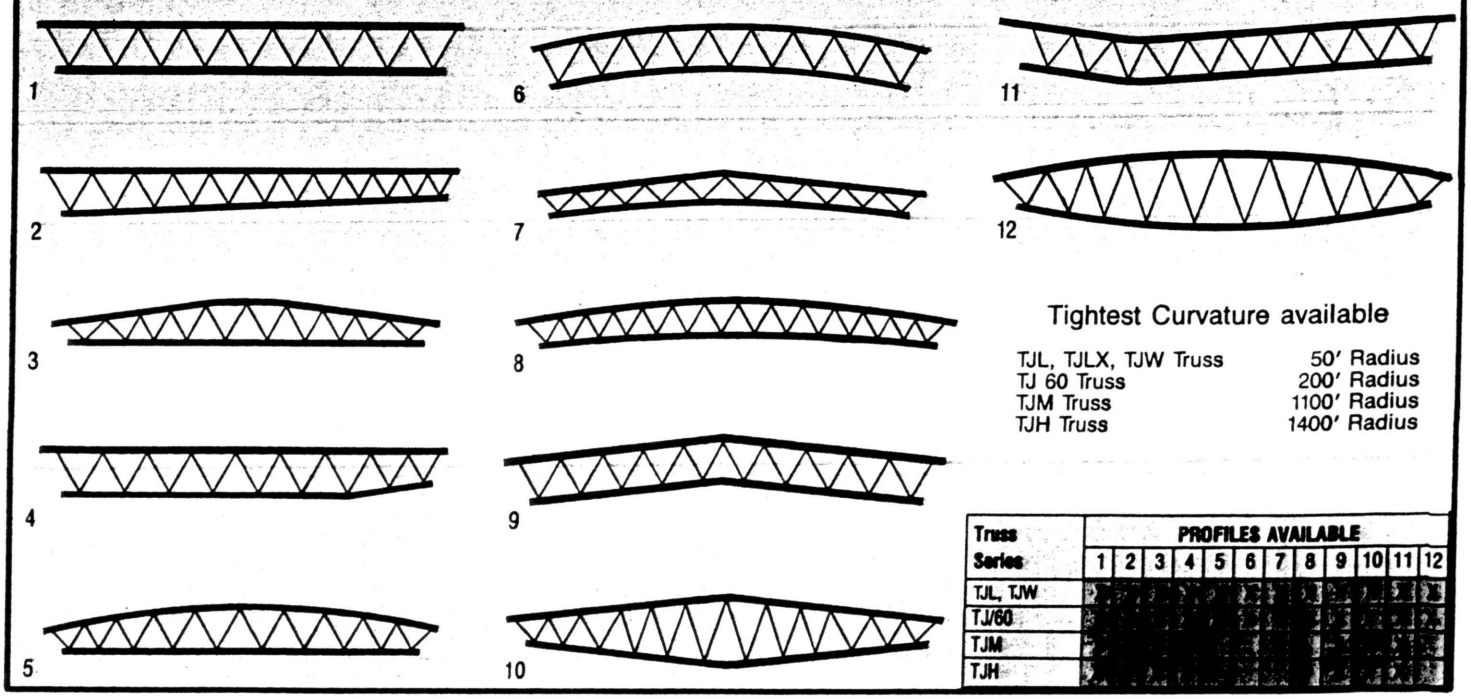

Tightest Curvature available

TJL, TJLX, TJW Truss	50′ Radius
TJ 60 Truss	200′ Radius
TJM Truss	1100′ Radius
TJH Truss	1400′ Radius

Truss Series	PROFILES AVAILABLE											
	1	2	3	4	5	6	7	8	9	10	11	12
TJL, TJW	■	■	■	■	■	■	■	■	■	■	■	■
TJ/60	■	■	■	■	■	■	■	■	■	■	■	■
TJM	■	■	■	■	■	■	■	■	■	■	■	■
TJH	■	■	■	■	■	■	■	■	■	■	■	■

R-z

TJM™ Series

FOR REFERENCE ONLY

Roof (115%)

[illegible]	[illegible]	397	397	400	400	402	402	404	404	406	406	409	409	411	411	413	413	415	415	418	418	420	420	422	422	424	424
[illegible]	[illegible]	[illegible]	[illegible]	369	369	371	371	373	373	375	375	377	377	379	379	381	381	383	383	386	386	388	388	390	390	392	392
[illegible]	[illegible]	[illegible]	[illegible]	328	328	345	345	346	346	348	348	350	350	352	352	354	354	356	356	358	358	360	360	362	362	364	364
227						313	313	323	323	325	325	327	327	329	329	331	331	332	332	334	334	336	336	338	338	339	339
187								300	300	305	305	307	307	308	308	310	310	312	312	313	313	315	315	317	317	318	318
158		195						266	266	287	287	288	288	290	290	292	292	293	293	295	295	296	296	298	298	300	300
131	150	165	179	[illegible]	[illegible]	[illegible]	[illegible]	[illegible]	[illegible]	256	256	272	272	274	274	275	275	277	277	278	278	280	280	281	281	283	283
112	140	140	166	171	172	[illegible]	[illegible]	[illegible]	[illegible]	[illegible]	[illegible]	247	247	260	260	261	261	262	262	264	264	265	265	267	267	268	268
96	120	120	146	147	163	[illegible]	[illegible]	[illegible]	[illegible]	[illegible]	[illegible]	[illegible]	[illegible]	239	239	248	248	249	249	251	251	252	252	253	253	255	255
83	110	104		127		153								217	217	231	231	237	237	239	239	240	240	241	241	242	242
72	96	90		110		133		157								211	211	223	223	226	226	229	229	230	230	231	231
63	84	79	105	97		116		138										204	204	216	216	219	219	220	220	221	221
55	74	69	93	85	111	102	122	121	133	142	149	[illegible]	[illegible]	[illegible]	[illegible]	[illegible]	[illegible]	[illegible]	[illegible]	199	199	210	210	211	211	212	212
49	65	61	82	75	100	90	113	107	123	125	133	[illegible]	[illegible]	[illegible]	[illegible]	[illegible]	[illegible]	[illegible]	[illegible]	[illegible]	[illegible]	193	193	203	203	204	204
44	58	55	73	67	89	80	104	95	114	111	123	129	132	[illegible]	[illegible]	[illegible]	[illegible]	[illegible]	[illegible]	[illegible]	[illegible]	[illegible]	[illegible]	188	188	196	196
[illegible]	52	[illegible]	65	60	80	72		85		99		115														183	183
35	47	[illegible]	58	54	71	64	86	76		88		103		116													
31	42	[illegible]	52	[illegible]	64	58	77	68		80		93		106		120											
28	38	36	47	44	58	52	70	62	83	72	[illegible]	84	[illegible]	96	106	109	113	[illegible]	[illegible]	[illegible]	[illegible]	[illegible]	[illegible]	[illegible]	[illegible]	[illegible]	[illegible]
26	34	32	43	39	53	47	63	56	75	66	[illegible]	76	[illegible]	87	[illegible]	99	106	111	113	[illegible]	[illegible]	[illegible]	[illegible]	[illegible]	[illegible]	[illegible]	[illegible]
		29	39	36	48	43	58	51	68	60	80	69	[illegible]	79	[illegible]	90	[illegible]	101	106	[illegible]	[illegible]	[illegible]	[illegible]	[illegible]	[illegible]	[illegible]	[illegible]
		[illegible]	36	[illegible]	44	[illegible]	52	[illegible]	62	[illegible]	73	63		72		82		[illegible]		[illegible]							
				30	40	[illegible]	48	[illegible]	57	[illegible]	66	58		66		75		84		94							
				27	37	[illegible]	44	[illegible]	52	[illegible]	61	53	70	60		69		77		86		96					

TJH™ Series

Roof (115%)

425	425	493	493	503	503	504	504	505	505	506	506	507	507	508	508	508	508	509	509	510	510	511	511	512	512	513	513
[illegible]	[illegible]	[illegible]	[illegible]	472	472	472	472	473	473	474	474	475	475	476	476	477	477	478	478	478	478	479	479	480	480	481	481
312	[illegible]	[illegible]	[illegible]	437	437	445	445	445	445	446	446	447	447	448	448	449	449	449	449	450	450	451	451	452	452	453	453
[illegible]						[illegible]	[illegible]	[illegible]	[illegible]	[illegible]	[illegible]	[illegible]	[illegible]	[illegible]	[illegible]	[illegible]	[illegible]	[illegible]	[illegible]	[illegible]	[illegible]	[illegible]	[illegible]	[illegible]	[illegible]	[illegible]	[illegible]
[illegible]		[illegible]				[illegible]	[illegible]	[illegible]	[illegible]	[illegible]	[illegible]	[illegible]	[illegible]	[illegible]	[illegible]	[illegible]	[illegible]	[illegible]	[illegible]	[illegible]	[illegible]	[illegible]	[illegible]	[illegible]	[illegible]	[illegible]	[illegible]
[illegible]		[illegible]						[illegible]	[illegible]	[illegible]	[illegible]	[illegible]	[illegible]	[illegible]	[illegible]	[illegible]	[illegible]	[illegible]	[illegible]	[illegible]	[illegible]	[illegible]	[illegible]	[illegible]	[illegible]	[illegible]	[illegible]
166	[illegible]	222	[illegible]	[illegible]	[illegible]	[illegible]	[illegible]	355	355	361	361	362	362	363	363	363	363	364	364	364	364	365	365	366	366	366	366
144	192	193	[illegible]	250	[illegible]	[illegible]	[illegible]	[illegible]	[illegible]	345	345	345	345	346	346	347	347	347	347	348	348	349	349	349	349	350	350
126	168	169	[illegible]	218	[illegible]	[illegible]	[illegible]	[illegible]	[illegible]	325	325	330	330	331	331	332	332	332	332	333	333	333	333	334	334	335	335
111	148	148		192		241						317	317	317	317	318	318	318	318	319	319	319	319	320	320	321	321
99	131	132		170		214						300	300	305	305	305	305	306	306	306	306	307	307	307	307	308	308
87	116	117	156	151		190								293	293	293	293	294	294	294	294	295	295	295	295	296	296
78	104	104	139	135	[illegible]	170	[illegible]	208	[illegible]	[illegible]	[illegible]	[illegible]	[illegible]	278	278	282	282	283	283	283	283	284	284	284	284	285	285
70	93	94	125	121	[illegible]	152	[illegible]	187	[illegible]	[illegible]	[illegible]	[illegible]	[illegible]	[illegible]	[illegible]	272	272	273	273	273	273	274	274	274	274	275	275
63	84	84	112	109	145	137	[illegible]	168	[illegible]	202	[illegible]	[illegible]	[illegible]	[illegible]	[illegible]	259	259	263	263	264	264	264	264	265	265	265	265
57	76	76	102	98	131	124		152		183								255	255	255	255	256	256	256	256	256	256
51	69	69	92	89	119	112		137		165								242	242	247	247	247	247	248	248	248	248
47	62	63	84	81	108	102	136	125		150		178								239	239	240	240	240	240	240	240
43	57	57	76	74	99	93	124	114	144	137	159	163	172	186	186	200	200	214	214	228	228	232	232	233	233	233	233
39	52	52	70	68	90	85	113	104	130	125	149	149	162	174	175	188	188	202	202	215	215	226	226	226	226	226	226
36	48	48	64	62	83	78	104	95	127	115	140	136	153	159	165	178	178	190	190	203	203	215	215	219	219	220	220

FL = Flat roof less than ⅛″ in 12″ slope.
SL = Sloped roof greater than ⅛″ in 12″ slope.

Notes:

1. Straight line interpolations may be made between depths and spans.
2. The load tables are limited to simple span uniform load. The tables may also be used for bottom chord bearing trusses (maximum bottom chord slope of 1″/12″) with or without cantilevers - at one or both ends. The cantilevers are limited to ⅓ of the main span provided the inboard shear for cantilevered conditions is limited to 4,900 lbs. (TJM Series) and 7,400 lbs. (TJH Series). Call your local Trus Joist representative for other conditions.
3. Values in **gray shaded area** may be increased 7% for repetitive member usage if the criteria on page 9.2 is met.

CURBS & WEIGHTS DIMENSIONS - 580J*04-07

R-3

NOTES:

FOR REFERENCE ONLY

1. [illegible] DIMENSIONS ARE IN INCHES.
2. CENTER OF GRAVITY
3. DIRECTION OF AIR FLOW

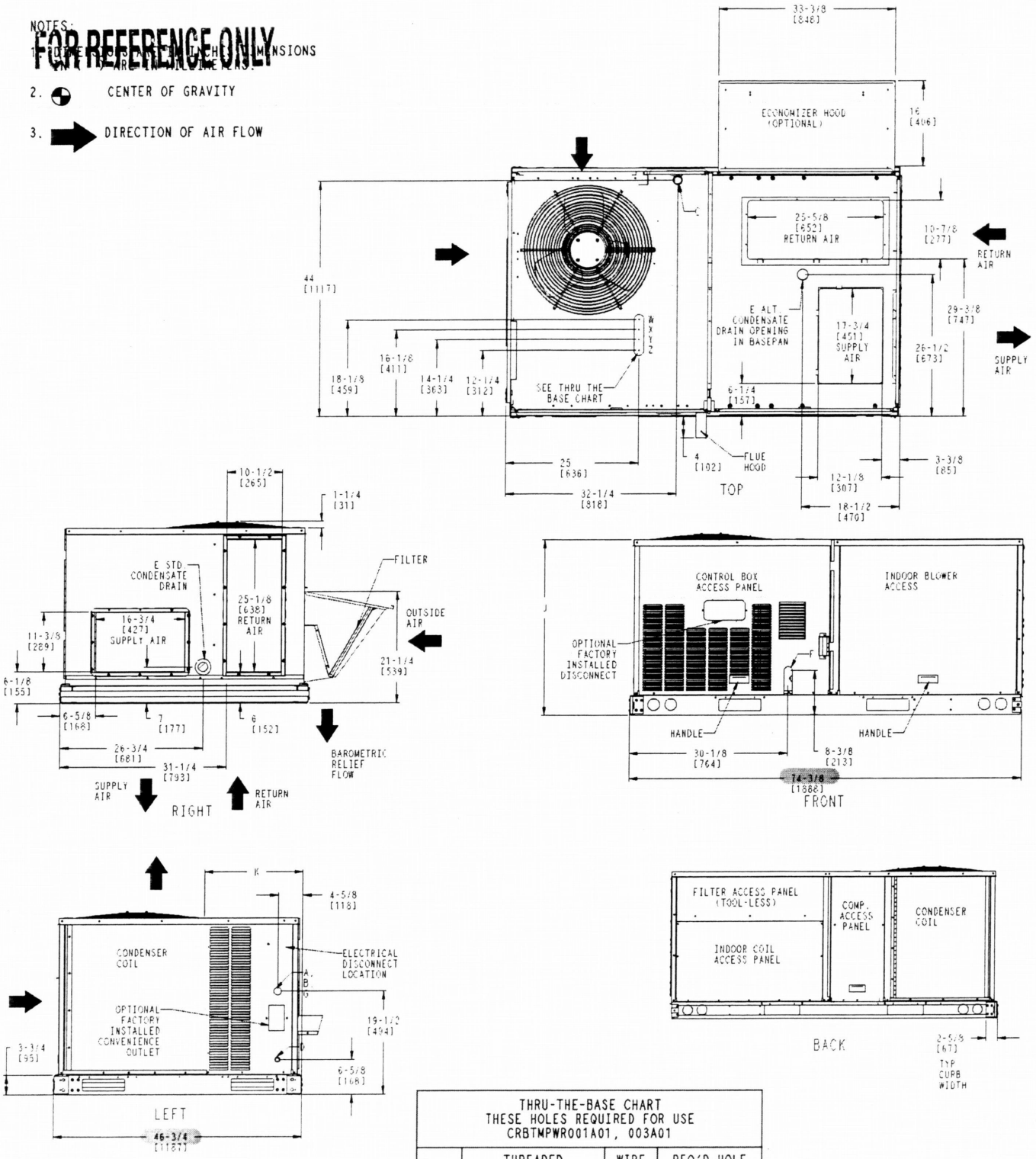

	CONNECTION SIZES
A	1 3/8" DIA [35] FIELD POWER SUPPLY HOLE
B	2" [50] DIA POWER SUPPLY KNOCKOUT
C	1 3/4" DIA [51] GAUGE ACCESS PLUG
D	7/8" DIA [22] FIELD CONTROL WIRING HOLE
E	3/4"-14 NPT CONDENSATE DRAIN
F	1/2"-14 NPT GAS CONNECTION
G	2 1/2 " DIA [64] POWER SUPPLY KNOCK-OUT

THRU-THE-BASE CHART THESE HOLES REQUIRED FOR USE CRBTMPWR001A01, 003A01			
	THREADED CONDUIT SIZE	WIRE USE	REQ'D HOLE SIZES (MAX.)
W	1/2"	ACC.	7/8" (22.2)
X	1/2"	24V	7/8" (22.2)
Y *	3/4" (001,003)	POWER	1 1/8" (28.4)
Z**	(003) 1/2" FPT	GAS	1 3/16" (30.0)
	FOR "THRU-THE-BASEPAN" FACTORY OPTION, FITTINGS FOR ONLY X, Y, & Z ARE PROVIDED		
*	SELECT EITHER 3/4" OR 1/2" FOR POWER, DEPENDING ON WIRE SIZE		
**	(001) PROVIDES 3/4" FPT THRU CURB FLANGE & FITTING.		

UNIT	J	K
580J-04A	33 3/8 [847]	18 5/8 [472]
580J-05A	33 3/8 [847]	14 7/8 [377]
580J-06A	33 3/8 [847]	14 7/8 [377]
580J-07A	41 3/8 [1051]	14 7/8 [377]

C08523

Fig. 1 - Dimensions 580J*04-07

CURBS & WEIGHTS DIMENSIONS - 580J*04-07 (cont.)

R-4

FOR REFERENCE ONLY

UNIT	STD. UNIT WEIGHT		CORNER WEIGHT (A)		CORNER WEIGHT (B)		CORNER WEIGHT (C)		CORNER WEIGHT (D)		C.G.		HEIGHT
	LBS.	KG.	LBS.	KG.	LBS.	KG.	LBS.	KG.	LBS.	KG.	X	Y	Z
580J-04A	537	219	111	50	125	57	131	59	116	53	39 [991]	23 [584]	16 3/8 [416]
580J-05A	537	244	124	56	139	63	145	66	124	59	39 [991]	23 [584]	17 [432]
580J-06A	569	258	131	59	147	67	154	70	137	62	39 [991]	23 [584]	17 1/4 [438]
580J-07A	652	296	150	68	169	76	176	80	157	71	39 [991]	23 [584]	20 1/8 [511]

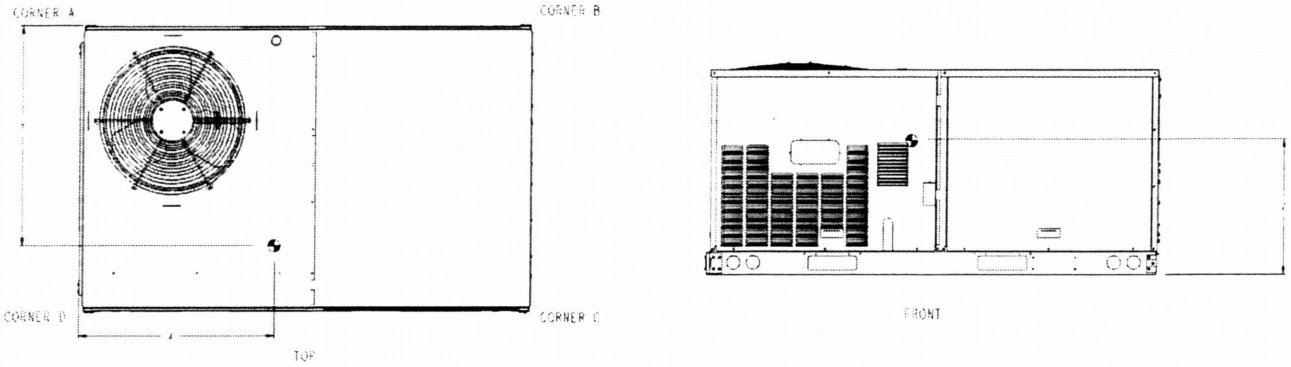

C08599

Fig. 2 - Dimensions 580J*04-07

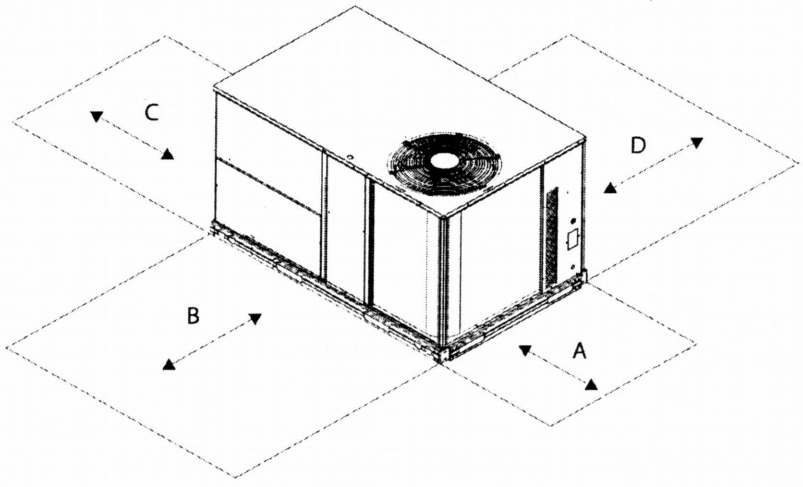

C08337

Fig. 3 - Service Clearance

LOC	DIMENSION	CONDITION
A	48" (1219 mm)	Unit disconnect is mounted on panel
	18" (457 mm)	No disconnect, convenience outlet option
	18" (457 mm)	Recommended service clearance
	12" (305 mm)	Minimum clearance
B	42" (1067 mm)	Surface behind servicer is grounded (e.g., metal, masonry wall)
	36" (914 mm)	Surface behind servicer is electrically non-conductive (e.g., wood, fiberglass)
	Special	Check for sources of flue products within 10-ft of unit fresh air intake hood
C	36" (914 mm)	Side condensate drain is used
	18" (457 mm)	Minimum clearance
D	48" (1219 mm)	No flue discharge accessory installed, surface is combustible material
	42" (1067 mm)	Surface behind servicer is grounded (e.g., metal, masonry wall, another unit)
	36" (914 mm)	Surface behind servicer is electrically non-conductive (e.g., wood, fiberglass)
	Special	Check for adjacent units or building fresh air intakes within 10-ft of this unit's flue outlet

CURBS & WEIGHTS DIMENSIONS - 580J*04-07 (cont.)

R-5

FOR REFERENCE ONLY

CONNECTOR PACKAGE	B	C	D ALT DRAIN HOLE	GAS	POWER	CONTROL	ACCESSORY POWER
CRBTMPWR001A01	1'-9 11/16" [551]	1'-4" [406]	1 3/4" [44.5]	3/4" [19] NPT	3/4" [19] NPT	1/2" [12.7] NPT	1/2" [12.7] NPT
CRBTMPWR003A01				1/2" [12.7] NPT			

ROOFCURB ACCESSORY	A	UNIT SIZE
CRRFCURB001A01	1'-2" [356]	580J* 04-07
CRRFCURB002A01	2'-0" [610]	

NOTES:
1. Roof curb accessory is shipped disassembled.
2. Insulated panels.
3. Dimensions in [ ] are in millimeters.
4. Roof curb: galvanized steel.
5. Attach ductwork to curb (flanges of duct rest on curb).
6. Service clearance: 4 ft on each side.
7. ⇨ Direction of airflow.
8. Connector package CRBTMPWR001A01 is for thru-the-curb type gas. CRBTMPWR003A01 is for thru-the-base type gas connections.

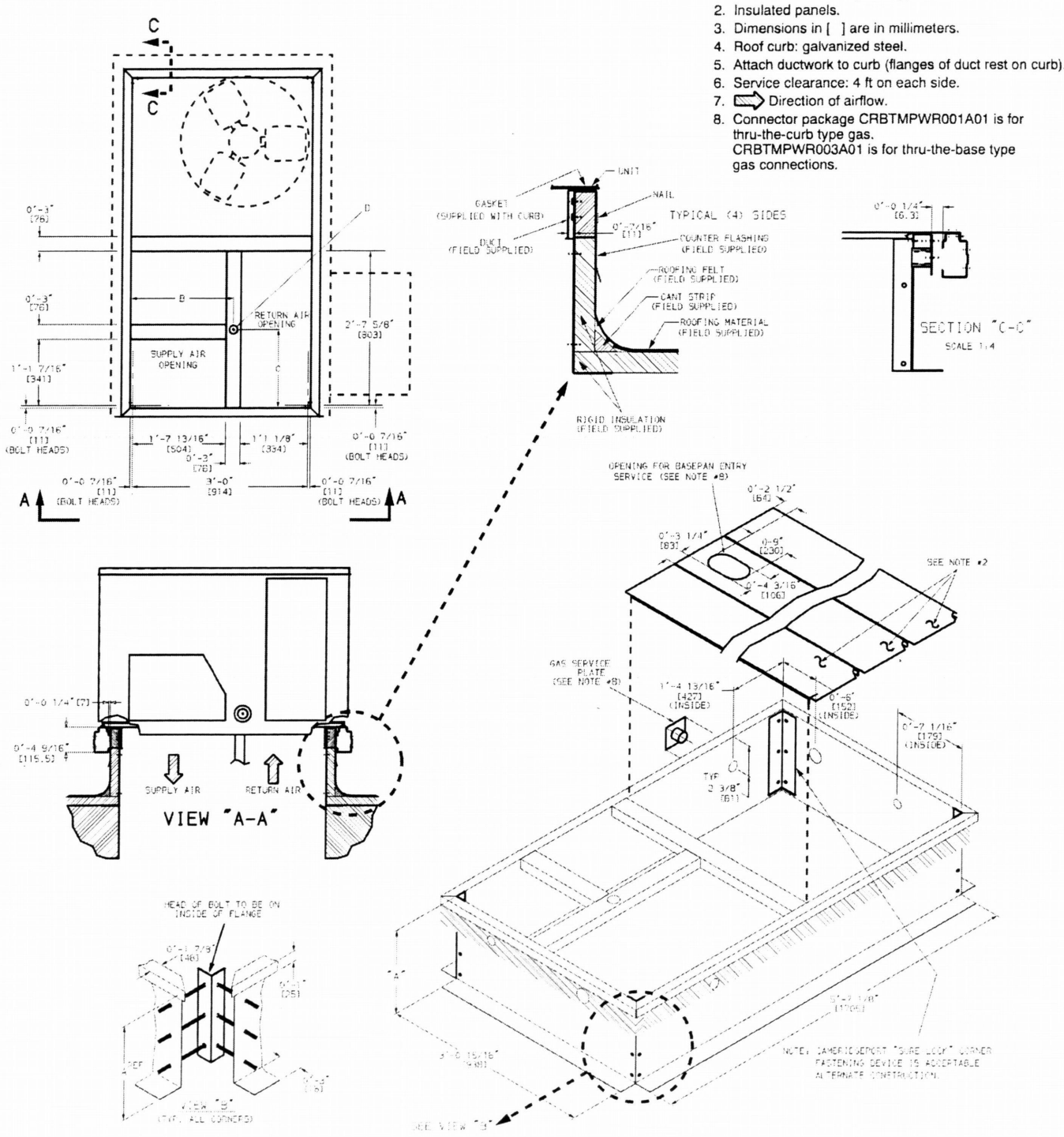

C08037

Fig. 4 - Roof Curb Details

580J

CURBS & WEIGHTS DIMENSIONS - 580J*08-12

R-6

FOR REFERENCE ONLY

NOTES:
1. ALL DIMENSIONS ARE IN INCHES. DIMENSIONS IN ( ) ARE IN MILLIMETERS.
2. CENTER OF GRAVITY
3. DIRECTION OF AIR FLOW

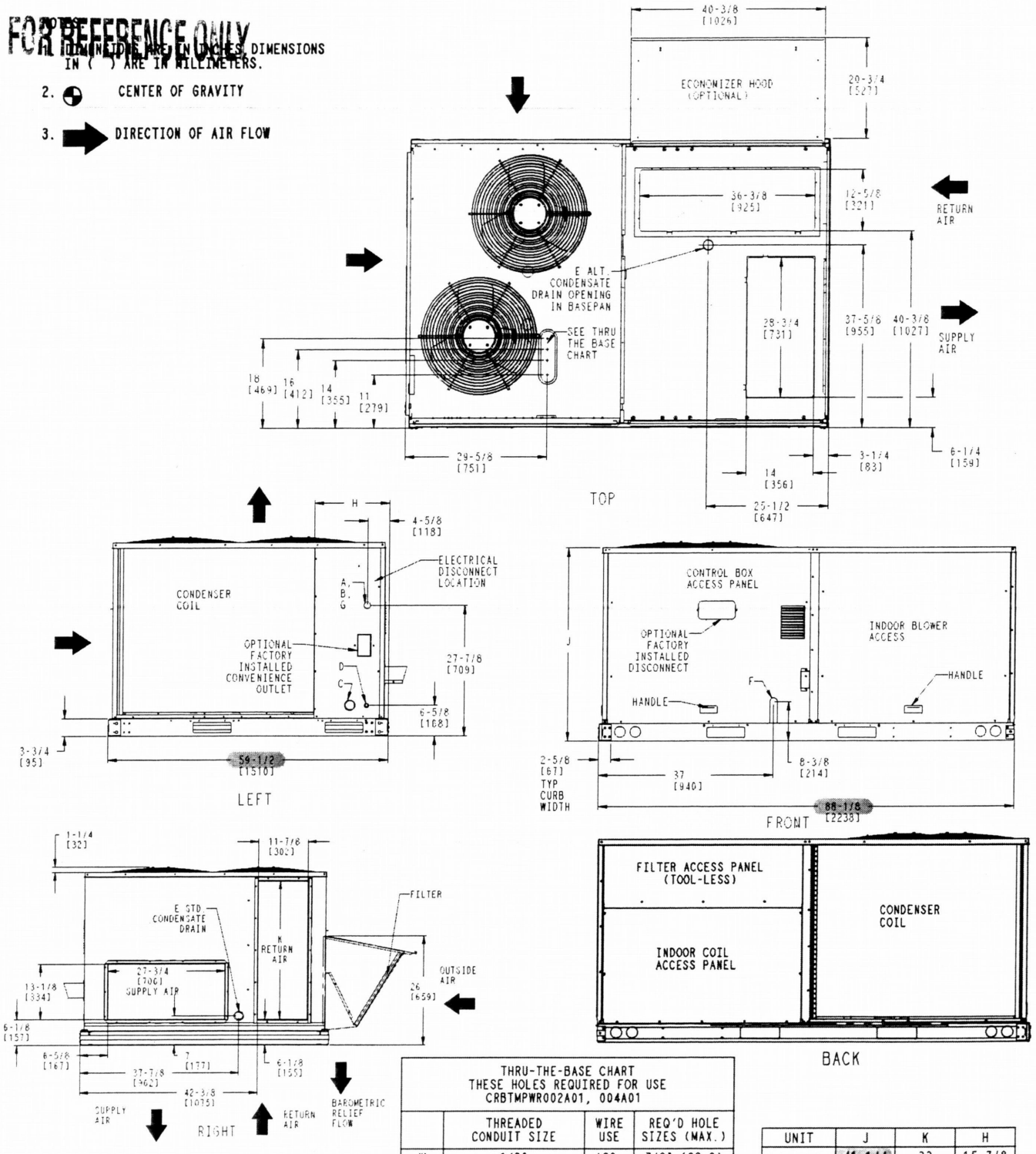

	CONNECTION SIZES
A	1 3/8" DIA [35] FIELD POWER SUPPLY HOLE
B	2 1/2" [64] DIA POWER SUPPLY KNOCKOUT
C	1 3/4" DIA [51] GAUGE ACCESS PLUG
D	7/8" DIA [22] FIELD CONTROL WIRING HOLE
E	3/4"-14 NPT CONDENSATE DRAIN
F	1/2"-14 NPT GAS CONNECTION 3/4"-14 NPT GAS CONNECTION
G	2 " DIA [51] POWER SUPPLY KNOCK-OUT

THRU-THE-BASE CHART THESE HOLES REQUIRED FOR USE CRBTMPWR002A01, 004A01			
	THREADED CONDUIT SIZE	WIRE USE	REQ'D HOLE SIZES (MAX.)
W	1/2"	ACC.	7/8" (22.2)
X	1/2"	24V	7/8" (22.2)
Y	1 1/4" (002,004)	POWER	1 3/4" (44.4)
Z**,*	(004) 3/4" FPT	GAS	1 5/8" (41.3)
	FOR "THRU-THE-BASEPAN" FACTORY OPTION, FITTINGS FOR ONLY X, Y, & Z ARE PROVIDED		
*	FOR HEAT SIZE 125K BTU - A FIELD SUPPLIED 1/2" ADAPTER IS REQUIRED BETWEEN BASE PAN FITTING AND GAS VALVE.		
**	(002) PROVIDES 3/4" FPT THRU CURB FLANGE & FITTING.		

UNIT	J	K	H
580J-08A	41 1/4 [1048]	33 [658]	15 7/8 [403]
580J-09A	49 3/8 [1253]	37 1/4 [946]	23 7/8 [609]
580J-12A	49 3/8 [1253]	37 1/4 [946]	15 7/8 [403]
* 580J-08D	41 1/4 [1048]	33 [658]	15 7/8 [403]
* 580J-12D	49 3/8 [1253]	37 1/4 [946]	15 7/8 [403]

* - FOR TWO STAGE COOLING MODELS WITH NOVATION CONDENSER COILS.

C08525

Fig. 5 - Dimensions 580J*08-12

CURBS & WEIGHTS DIMENSIONS - 580J*08-12 (cont.)

R->

FOR REFERENCE ONLY

	STD. UNIT WEIGHT		CORNER WEIGHT (A)		CORNER WEIGHT (B)		CORNER WEIGHT (C)		CORNER WEIGHT (D)		C.G.		
	LBS.	KG.	LBS.	KG.	LBS.	KG.	LBS.	KG.	LBS.	KG.	X	Y	Z
580J-08A	810	367	171	78	164	74	233	106	242	110	41 7/8 (1064)	33 7/8 (860)	20 1/4 (514)
580J-09A	910	413	193	88	181	82	260	118	276	125	41 3/8 (1051)	22 7/8 (581)	22 7/8 (581)
580J-12A	965	438	207	94	204	93	275	125	279	127	42 3/8 (1076)	24 1/8 (613)	24 1/8 (613)
580J-08D	860	390	153	69.3	147	66.6	273	124	284	129	42 3/4 (1088)	37 1/2 (954)	20 1/8 (512)
580J-12D	940	426	196	88.9	190	86.2	271	123	279	127	42 (1067)	33 7/8 (862)	20 1/4 (513)

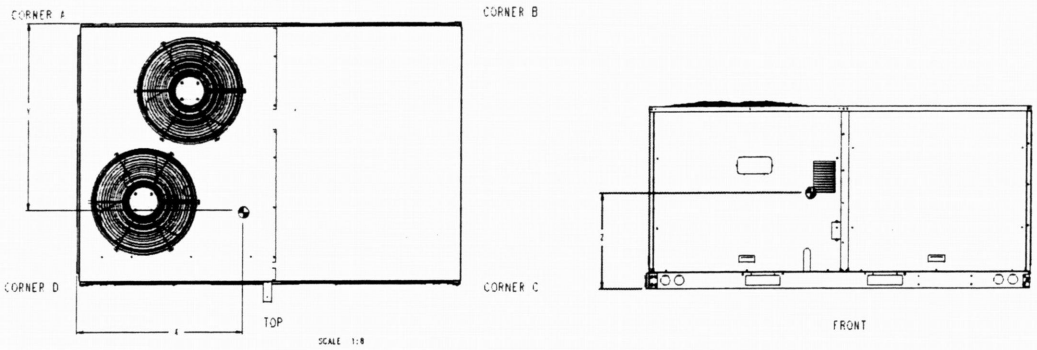

C08526

Fig. 6 - 580J*08-12

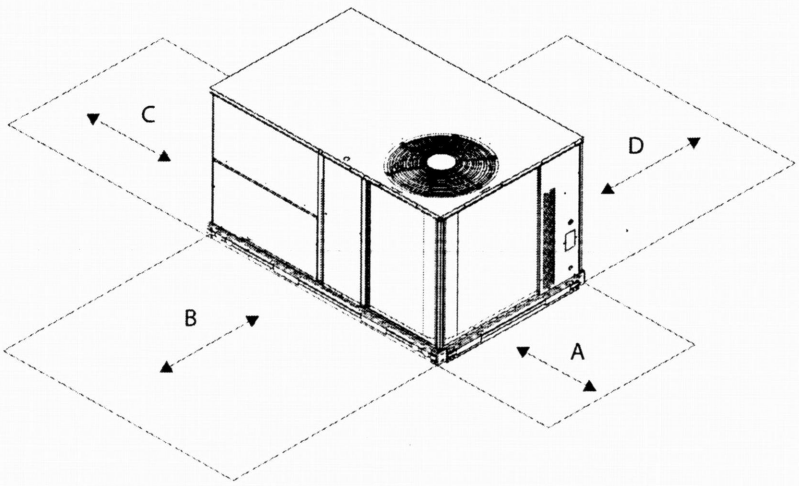

C08337

Fig. 7 - Service Clearance

LOC	DIMENSION	CONDITION
A	48" (1219 mm)	Unit disconnect is mounted on panel
	36" (914 mm)	If dimension–B is 12" (305 mm)
	18" (457 mm)	No disconnect, convenience outlet option
	18" (457 mm)	Recommended service clearance (use electric screwdriver)
	12" (305 mm)	Minimum clearance (use manual ratchet screwdriver)
B	36" (914 mm)	Unit has economizer
	12" (305 mm)	If dimension–A is 36" (914 mm)
	Special	Check for sources of flue products within 10–ft of unit fresh air intake hood
C	36" (914 mm)	Side condensate drain is used
	18" (457 mm)	Minimum clearance
D	48" (1219 mm)	No flue discharge accessory installed, surface is combustible material
	42" (1067 mm)	Surface behind servicer is grounded (e.g., metal, masonry wall, another unit)
	36" (914 mm)	Surface behind servicer is electrically non–conductive (e.g., wood, fiberglass)
	Special	Check for adjacent units or building fresh air intakes within 10–ft of this unit's flue outlet

CURBS & WEIGHTS DIMENSIONS - 580J*08-14

R-8

FOR REFERENCE ONLY

ROOFCURB ACCESSORY	A	UNIT SIZE
CRRFCURB003A01	1'-2" (356)	580J*08 – 14
CRRFCURB004A01	2'-0" (610)	

NOTES:
1. ROOFCURB ACCESSORY IS SHIPPED DISASSEMBLED.
2. INSULATED PANELS: 1" THK. POLYURETHANE FOAM, 1-3/4 # DENSITY.
3. DIMENSIONS IN [ ] ARE IN MILLIMETERS.
4. ROOFCURB: 16 GAGE STEEL.
5. ATTACH DUCTWORK TO CURB. (FLANGES OF DUCT REST ON CURB)
6. SERVICE CLEARANCE 4' ON EACH SIDE.
7. ⇨ DIRECTION OF AIR FLOW.
8. CONNECTOR PACKAGES CRBTMPWR001A01 AND 2A01 ARE FOR THRU-THE-CURB GAS TYPE. PACKAGES CRBTMPWR003A01 AND 4A01 ARE FOR THE THRU-THE-BOTTOM TYPE GAS CONNECTIONS.

CONNECTOR PKG. ACC.	B	C	D ALT DRAIN HOLE	GAS	POWER	CONTROL	ACCESSORY PWR
CRBTMPWR001A01 CRBTMPWR002A01	2'-8 7/16" [827]	1'-10 15/16" [583]	1 3/4" [44.5]	3/4" [19] NPT	3/4" [19] NPT 1 1/4" [31.7]	1/2" [12.7] NPT	1/2" [12.7] NPT
CRBTMPWR003A01	↓	↓	↓	1/2" [12.7] NPT	3/4" [19] NPT	↓	↓
CRBTMPWR004A01	↓	↓	↓	3/4" [19] NPT	1 1/4" [31.7]	↓	↓

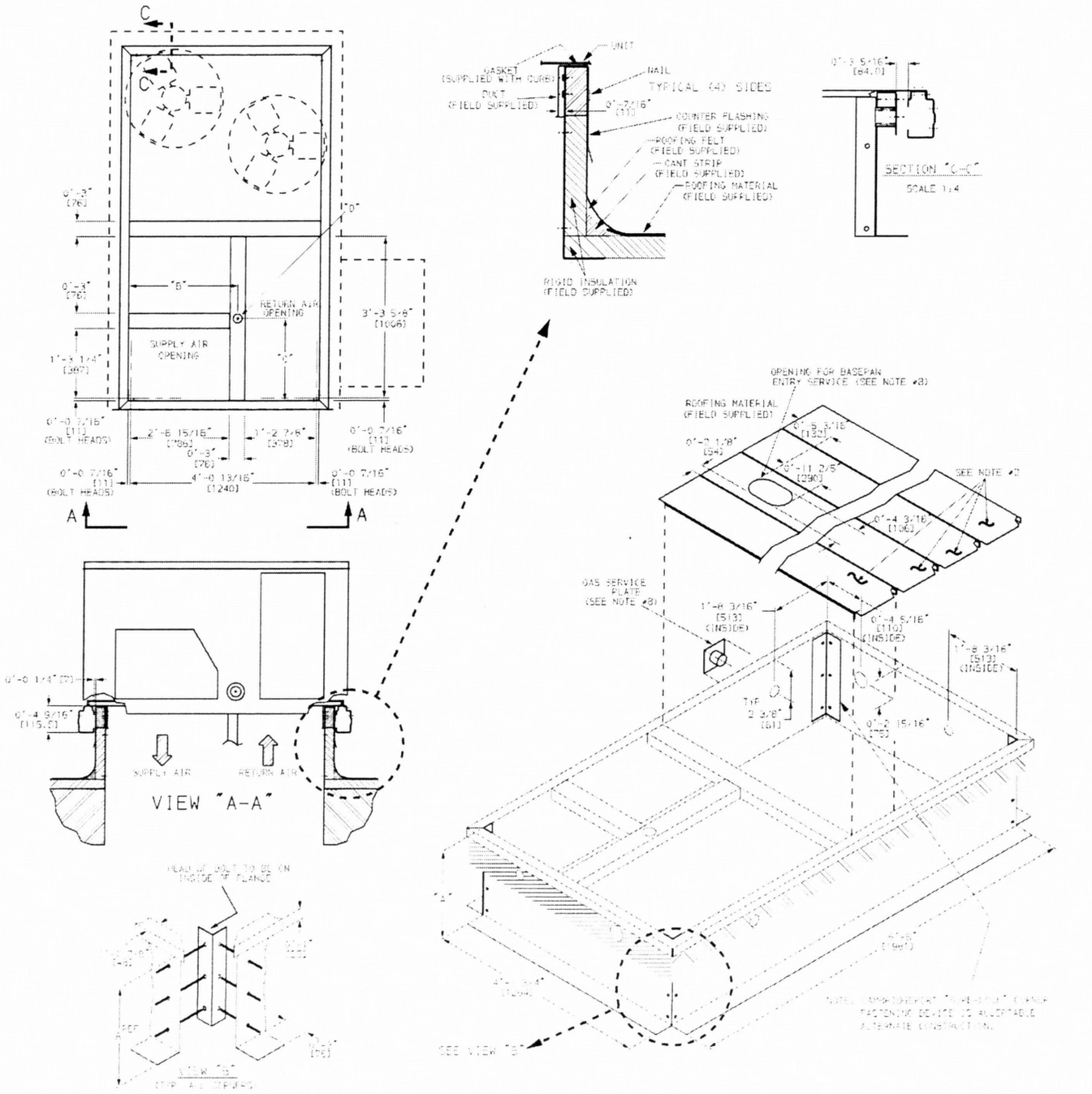

C09525

Fig. 8 - Roof Curb Details

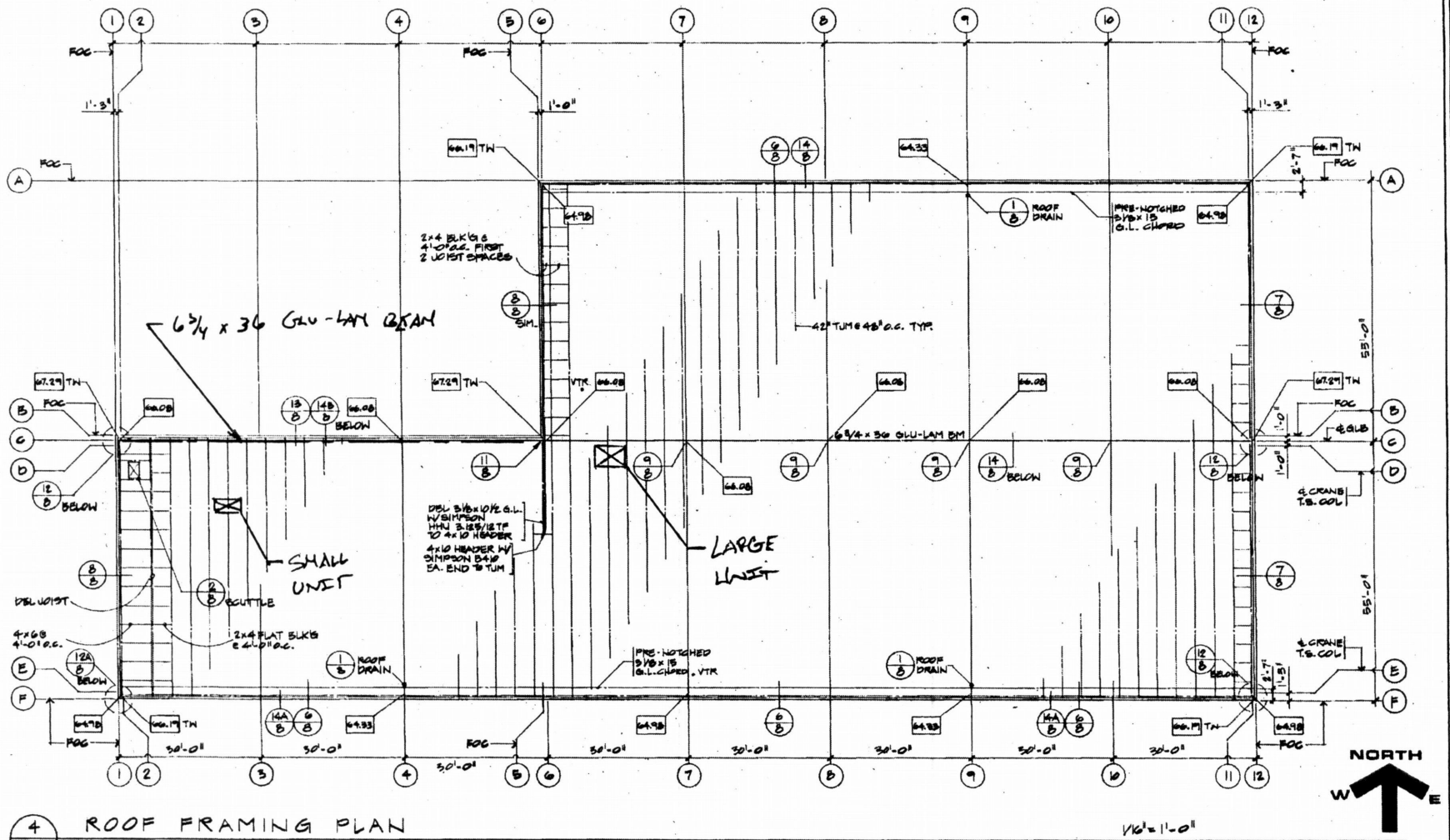

4/7 ROOF FRAMING PLAN

1/16" = 1'-0"

GENERAL NOTES - ROOF FRAMING PLAN :

00.00 : ELEVATIONS NOTED ON PLAN DENOTE ELEVATION IN FEET AT TOP OF PLYWOOD DECK (UNLESS NOTED OTHERWISE). FINISH FLR. ELEV. = 57.42'

TN : TOP OF CONC. PANEL

FOC : FACE OF CONC. PANEL

VTR : GAS VENT THRU ROOF - SEE MECHANICAL

CONTRACTOR OPTION : PROVIDE 30# ASPHALT PAPER BETWEEN CONC. & LEDGER IN LIEU OF R.T. REQUIREMENT

SEE STRUCTURAL NOTES FOR DIAPHRAGM NAIL'G PLAN (SHT. 7)

1 - 12/06/12

"NEW SHEET"

REGISTERED ARCHITECT NORMAN E. KRAUSE PORTLAND, OREGON STATE OF OREGON

FOR REFERENCE ONLY

JENSEN KRAUSE SCHOENLEBER
Associated Architects
1962 NW Kearney Street
Portland, Oregon 97209
503-227-5616 206-624-6865

R-9

PORTLAND, OREGON

R-10

FOR REFERENCE ONLY

1 - 12/06/12

"NEW SHEET"

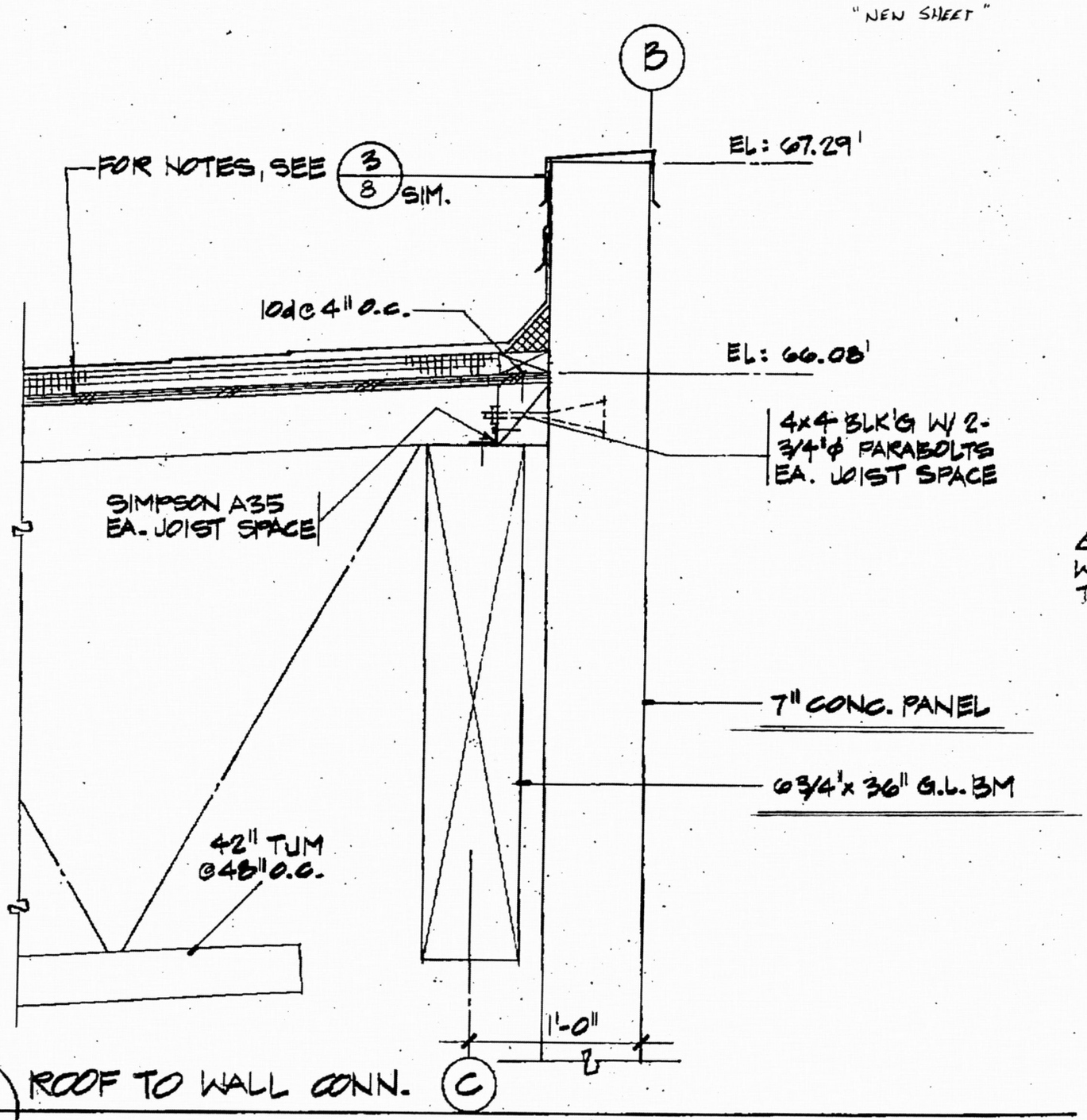

13/8 ROOF TO WALL CONN.

1" = 1'-0"