SCAN

ALLSTRUCTURE
Engineering LLC
7140 SW Fir Loop, Ste. 231 • Tigard, OR 97223
v: 503.620.4314 • f: 503.620.4304
www.allstructure.com

# STRUCTURAL DOCUMENTS

Project:

Allstructure #
12136.00

**Hawthorne Apartments**
**New Construction**
Portland, Oregon

June 14, 2012

| TABLE OF CONTENTS: | | |
|---|---|---|
| | | Sheet No. |
| PROJECT SCOPE | | P1 |
| GRAVITY CALCULATIONS | | G1 - G35 |
| LATERAL CALCULATIONS | | L1 - L37 |
| STEEL BALCONY | | B1 - B21 |
| | | |
| | | |
| | | |
| | | |
| | | |
| | | |
| | | |

**NOTES:**

Allstructure Engineering LLC was retained in a limited capacity for this project and is responsible only for the items described in these documents.

STRUCTURAL REGISTERED PROFESSIONAL ENGINEER
76768PE
OREGON
MARCH 10, 2009
RYAN HARDIE

Expires: 6/30/2013

12-154913-CO

HA02

**PROJECT INFORMATION:**

**Name:** Hawthorne Apartments
SE Hawthorne and SE 30th

**Location:** SE Hawthorne and SE 30th
Portland, Oregon

**Code:** 2010 Oregon Structural Specialty Code

**Scope:** This project is the design of a new four-story, wood-framed apartment building on conventional shallow foundation. Foundation design is based on a geotechnical report dated May2, 2012 by GeoPacific Engineering, Inc.

The engineered components of this otherwise conventionally-framed wood structure are included herein. Construction, including framing and foundation, not specifically designed herein is to be performed in accordance with the Oregon Residential Specialty Code.

Roof Snow: 20 psf
Floor Live: 40 psf (100 psf in corridors and common areas)
Wind: 95 MPH, Exposure B
Seismic: Design Category D1
Sds: 0.74
Importance Factor: 1.00
R = 6.5 (bearing walls with structural wood shear walls)
See attached for soil parameters.

12136.00

ALLSTRUCTURE
Engineering LLC
7140 SW Fir Loop, Suite 231
Tigard, Oregon 97223
v: 503.620.4314 • f: 503.620.4304

HAWTHORNE APTS

BY _____ DATE _____
CHK BY _____ DATE _____
JOB NO 12136.00
SHEET P1 OF _____

ALLSTRUCTURE
Engineering LLC

Title :
Engineer:
Project Desc.:

Title Block Line 1
You can changes this area using the "Settings" menu item and then using the "Printing & Title Block" selection.
Title Block Line 6

Job #

Printed: 14 JUN 2012, 10:56AM

# Wood Beam

ENERCALC, INC. 1983-2011, Build:6.12.6.7, Ver:6.12.6.7

Lic. # : KW-06007476 Licensee : allstructure engineering inc.

Description : FLOOR HEADER

| Load Combination / Segment Length | Span # | Max Stress Ratios M | Max Stress Ratios V | $C_d$ | $C_{F/V}$ | $C_r$ | $C_m$ | $C_t$ | $C_L$ | Moment Values M | Moment Values fb | Moment Values Fb | Shear Values V | Shear Values fv | Shear Values Fv |
|---|---|---|---|---|---|---|---|---|---|---|---|---|---|---|---|
| +D+0.750Lr+0.750L+0.5250E+H | | | | | 1.100 | 1.000 | 1.000 | 1.000 | 1.000 | | | 0.00 | 0.00 | 0.00 | 0.00 |
| Length = 8.0 ft | 1 | 0.460 | 0.228 | 1.600 | 1.100 | 1.000 | 1.000 | 1.000 | 1.000 | 4.48 | 728.18 | 1584.00 | 1.72 | 65.71 | 288.00 |
| +D+0.750L+0.750S+0.5250E+H | | | | | 1.100 | 1.000 | 1.000 | 1.000 | 1.000 | | | 0.00 | 0.00 | 0.00 | 0.00 |
| Length = 8.0 ft | 1 | 0.460 | 0.228 | 1.600 | 1.100 | 1.000 | 1.000 | 1.000 | 1.000 | 4.48 | 728.18 | 1584.00 | 1.72 | 65.71 | 288.00 |

## Overall Maximum Deflections - Unfactored Loads

| Load Combination | Span | Max. "-" Defl | Location in Span | Load Combination | Max. "+" Defl | Location in Span |
|---|---|---|---|---|---|---|
| D+L | 1 | 0.0923 | 4.040 | | 0.0000 | 0.000 |

## Vertical Reactions - Unfactored

Support notation : Far left is #1 Values in KIPS

| Load Combination | Support 1 | Support 2 |
|---|---|---|
| Overall MAXimum | 2.640 | 2.640 |
| D Only | 1.040 | 1.040 |
| L Only | 1.600 | 1.600 |
| D+L | 2.640 | 2.640 |

G11

FRAMING

CORRIDOR BEAMS

SPAN: 5'-0" 1 3/4" x 11 7/8" 1.9E

wdl = 26psf x 2.5'

wll = 100psf 2.5'

wdl = 26psf x 10'

wll = 40psf x 10'

BEAM 2 @ 2nd FLOOR

SPAN: 6'-4"

wdl = 26psf x 11'

wll = 100psf x 11'

BEAM 3

SPAN: 14'-9" 5 1/4 x 14" 2.0E PSL

wdl = 26psf x 9'

wll = 100psf 9'

ALLSTRUCTURE
Engineering LLC
7140 SW Fir Loop, Suite 231
Tigard, Oregon 97223
v: 503.620.4314 • f: 503.620.4304

BY _____ DATE _____

CHK BY _____ DATE _____

JOB NO _____

SHEET G12 OF _____

FOUNDATION

EXTERIOR

ROOF DL = 17 psf · 14.5' = 247 plf

SL 20 psf · 14.5' = 290 plf  @ 25 PSF = 363 PLF

FLOORS DL 25 psf · 3 × 12.25' = 919 plf

LL 40 psf · 3 × 12.25' = 1470 plf

WALLS DL = 10 psf · 40' = 400 plf

$\Sigma DL = 1526$ plf
$\Sigma SL = 290$ plf
$\Sigma LL = 1470$ plf

DL+LL CONTROLS
$\Sigma = 3036$ plf

$b_f = \frac{3036 \text{ \#/ft}}{2000 \text{ PSF}^{*}} = 1.52$ → USE 24" WIDE FOOTING TO ACCOUNT FOR ADDITIONAL 320 psf brick load.

* 2,500 PSF PER GEOTECH REPORT

ROOF BEARING W/ TRIB = (½)40' = 20' × 37 PSF
740 PLF

ASSUMES PERIMETER BRG ONLY (NO INTERIOR BRG)

919
1470
400

3849 PLF
÷ 2500 PSF
1.54 ft < 2.0 ft ✓

W/ SNOW @ 25 PSF
$\sigma_{all} = 2500$ PSF,
$b_{min} = 1.37$ ft < 2.0 ft.

EXTERIOR WALL BRG ADEQUATE

ALLSTRUCTURE Engineering LLC
7140 SW Fir Loop, Suite 231
Tigard, Oregon 97223
v: 503.620.4314 • f: 503.620.4304

BY _____ DATE _____
CHK BY _____ DATE _____
JOB NO _____
SHEET G27 OF _____

FOUNDATION

TYPICAL CORRIDOR WALL

| | | |
|---|---|---|
| ROOF | DL = 17psf · 12.25' = | 208 plf ✓ |
| | SL = 25psf · 12.25' = | 306 plf ✓ |
| FLOOR: | DL = 25psf · 10' × 3 = | 750 plf ✓ |
| | LL = 40psf · 10' × 3 = | 1200 plf ✓ |
| CORRIDOR | DL = 25psf · 2.5' × 3' = | 188 plf ✓ |
| | LL = 100psf · 2.5' × 3' = | 750 plf ✓ |
| WALLS | DL = 10plf × 40' = | 400 plf ✓ |

$\Sigma DL = 1546$ plf
$\Sigma SL = 306$ plf
$\Sigma LL = 1950$ plf

$\Sigma DL + LL$ CONTROLS

$$b_f = \frac{3476}{2000\,\#} = 1.748 \quad \text{- USE } 2'\text{-}0''$$

2500 PSF OK

$$\frac{3802}{2500} = 1.52 < 2.0$$

ALLSTRUCTURE
Engineering LLC
7140 SW Fir Loop, Suite 231
Tigard, Oregon 97223
v: 503.620.4314 • f: 503.620.4304

BY _____ DATE _____
CHK BY _____ DATE _____
JOB NO _____
SHEET G20 F _____

FOUNDATION

INTERIOR FOOTINGS

ROOF

DL = 17psf · 20' = 340plf
SL = 20psf · 20' = 400plf

FLOORS DL = 25psf · 20' × 3 = 1500plf
LL = 40psf · 20' × 3 = 2400plf

WALLS DL = 10psf · 40' = 400plf
DL = 32psf · 16' = ~~352~~plf

DL = ~~2542~~ 2240 plf
SL = 400 plf
LL = 2400 plf

$\Sigma$ DL + LL = ~~4992~~ 4600 plf

$b_f = \frac{\cancel{4992}\ 4600\ plf}{2000\ psf}$ = 2.496 2.32 USE 2'-6"

2500 psf ok

(B) (A) 5 - 6

ALLSTRUCTURE
Engineering LLC

7140 SW Fir Loop, Suite 231
Tigard, Oregon 97223
v: 503.620.4314 • f: 503.620.4304

BY _____ DATE _____
CHK BY _____ DATE _____
JOB NO _____
SHEET G29 OF _____

FOUNDATION

PLANTER WALL

H = 3'-6"

$q_a$ = 2000 PSF

$\delta$ = 0.5

EFP = 35 PCF

SEISMIC = S.SH

PASSIVE = 390 PCF

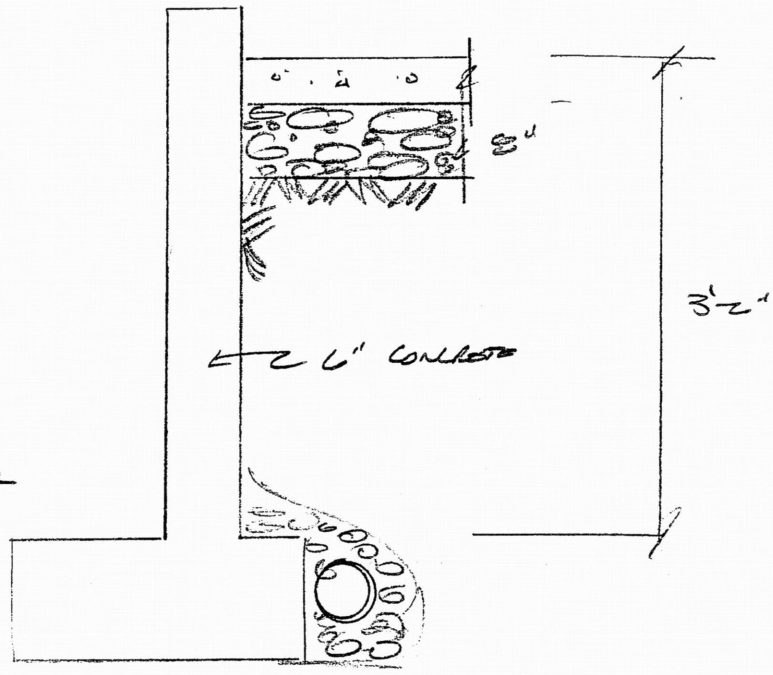


DESIGN AS EMPTY FOR CLEANING PURPOSES

ALLSTRUCTURE
Engineering LLC

7140 SW Fir Loop, Suite 231
Tigard, Oregon 97223
v: 503.620.4314 • f: 503.620.4304

BY _____ DATE _____

CHK BY _____ DATE _____

JOB NO _____

SHEET G30 OF _____

ALLSTRUCTURE
Engineering LLC
7140 SW Fir Loop, Ste. 231 • Tigard, OR 97223
v: 503.620.4314 • f: 503.620.4304
www.allstructure.com

# STRUCTURAL DOCUMENTS

Project:

Allstructure #
12136.00

**Hawthorne Apartments**
**Response to Comments**
Portland, OR

August 27, 2012

**TABLE OF CONTENTS:**


| | | Sheet No. |
|---|---|---|
| RESPONSE TO COMMENT #9 | | 1 |
| RESPONSE TO COMMENT #10 | | 2 - 4 |


**NOTES:**

Allstructure Engineering LLC was retained in a limited capacity for this project and is responsible only for the items described in these documents.

STRUCTURAL REGISTERED PROFESSIONAL ENGINEER
76768PE
OREGON
MARCH 10, 2009
RYAN HARDIE

Expires: 6/30/2013

## DIAPHRAGM FORCE

$V_{DIAPHRAGM} = 0.2 S_{DS} I W_{px} = 0.14 S$

| | $W_{px}$ | $V_{diaphg}$ | ASD (×0.7) | % INCREASE |
|---|---|---|---|---|
| ROOF | 156.310K | 23.13K | 16.19K | – |
| 3RD | 225.109 | 33.32K | 23.32K | – |
| 2ND | 227.81 | 33.72K | 23.60K | 1.43 |
| MAIN | 319.39 | 47.27K | 33.1K | 2.77 |

% INCREASE IS CHANGE ABOVE THE LOADS SUBMITTED UNDER THE PREVIOUS CALCULATION

| WALL LINE | | REVISED 2ND STORY | REVISED 3RD STORY | |
|---|---|---|---|---|
| 1 | 21 plf × | 1.43 = 30 plf | 15 plf × 2.77 = | 42 plf |
| 2 | 46 | = 66 plf | 34 × = | 94 plf ← MAX! |
| 4 | 47 | = 67 plf | 34 = | 94 plf |
| 5 | 46 | = 66 plf | 33 = | 91 plf |
| 6 | 25 | = 36 plf | 18 = | 50 plf |
| 6.2 | 25 | = 36 plf | 18 = | 50 plf |
| A | 22 | = 32 plf | 16 = | 44 plf |
| BC | 42 | = 60 plf | 31 = | 86 plf |
| DE | 37 | = 53 plf | 27 = | 75 plf |
| E1 | 22 | = 32 plf | 16 = | 44 plf |

FOR 3/4" PLY W/ 10d @ 6" O/C EDGES + 12" O/C FIELD

$v_{cap}$ = 215 plf OK ALL CASES

NO COLLECTORS REQ

ALLSTRUCTURE Engineering LLC
7140 SW Fir Loop, Suite 231
Tigard, Oregon 97223
v: 503.620.4314 • f: 503.620.4304

RESPONSE TO COMMENT #9
HAWTHORNE

BY _____ DATE _____
CHK BY _____ DATE _____
JOB NO. 12136.00
SHEET 1 OF _____

FOUNDATION

$q_a = 2{,}500 \text{ PSF} \times \frac{4}{3} = 3333 \text{ psf}$

$DL = 42\text{psf} \times 10' + 30' \times 10\text{psf} = 720\text{psf}$

$24\text{psf} \times 3 \times 9 = \underline{448\text{psf}}$

$1368\text{psf}$

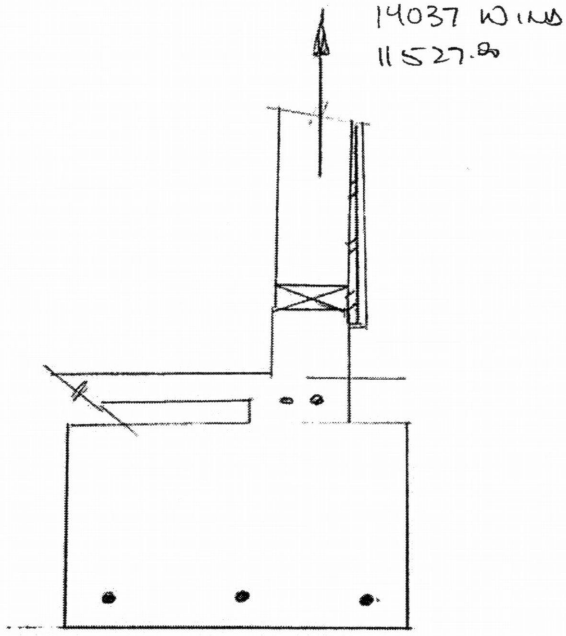


SOLVE FOR EFFECTIVE GRADE BEAM LENGTH @ q = 3,333 psf (MAX SOIL CAPACITY)

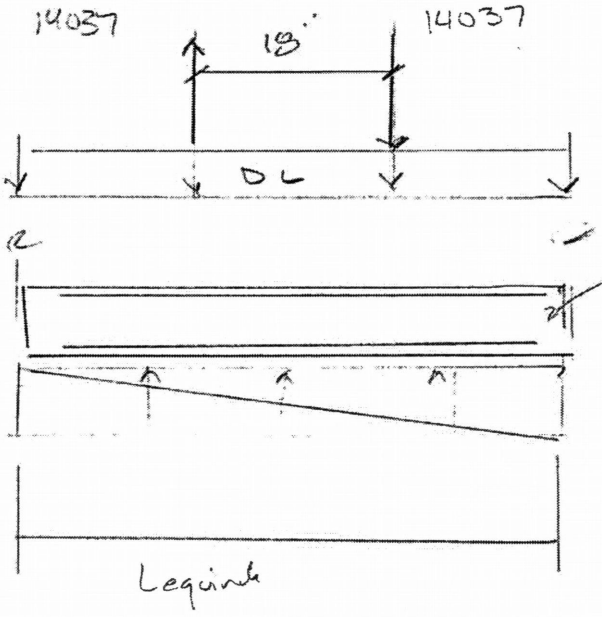


$M = 14037 \times 1.5' = 21056 \text{ \#FT}$

30" WIDE x 18" GRADE BEAM W/ (3) #4 TOP & BTM

ALLSTRUCTURE Engineering LLC
7140 SW Fir Loop, Suite 231
Tigard, Oregon 97223
v: 503.620.4314 • f: 503.620.4304

RESPONSE TO COMMENT #10

BY _____ DATE _____
CHK BY _____ DATE _____
JOB NO 12136.00
SHEET 2 OF _____

ALLSTRUCTURE Engineering LLC

Title : Title Block Line 1 Job #
Engineer: You can changes this area
Project Desc.: using the "Settings" menu item and then using the "Printing & Title Block" selection.
Title Block Line 6

Printed: 23 AUG 2012, 11:43AM

# Beam on Elastic Foundation

File: s:\Projects\2012\12136.00 Hawthorne Apts\CALCULATIONS\hawthorne.ec6
ENERCALC, INC. 1983-2012, Build:6.12.8.20, Ver:6.12.7.31

**Lic. # : KW-06007476** **Licensee : allstructure engineering inc.**

Description : footing

## CODE REFERENCES

Calculations per ACI 318-05, IBC 2006, CBC 2007, ASCE 7-05
Load Combinations Used : ASCE 7-05

## Material Properties

| | | | | | |
|---|---|---|---|---|---|
| f'c | = | 2.50 ksi | ϕ Phi Values | Flexure : | 0.90 |
| fr = f'c$^{1/2}$ * 7.50 | = | 375.0 psi | | Shear : | 0.750 |
| ψ Density | = | 145.0 pcf | $\beta_1$ | = | 0.850 |
| λ Lt Wt Factor | = | 1.0 | | | |
| Elastic Modulus | = | 2,850.0 ksi | | | |

Load Combination ASCE 7-05

| | | | | | |
|---|---|---|---|---|---|
| fy - Main Rebar | = | 60.0 ksi | Fy - Stirrups | = | 40.0 ksi |
| E - Main Rebar | = | 29,000.0 ksi | E - Stirrups | = | 29,000.0 ksi |
| | | | Stirrup Bar Size # | = | # 3 |
| | | | Number of Resisting Legs Per Stirrup | | 1.0 |

Beam is supported on an elastic foundation,

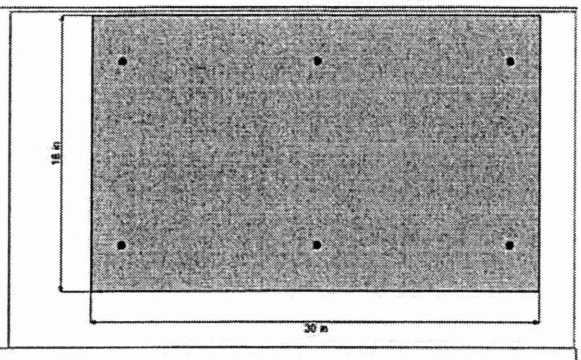


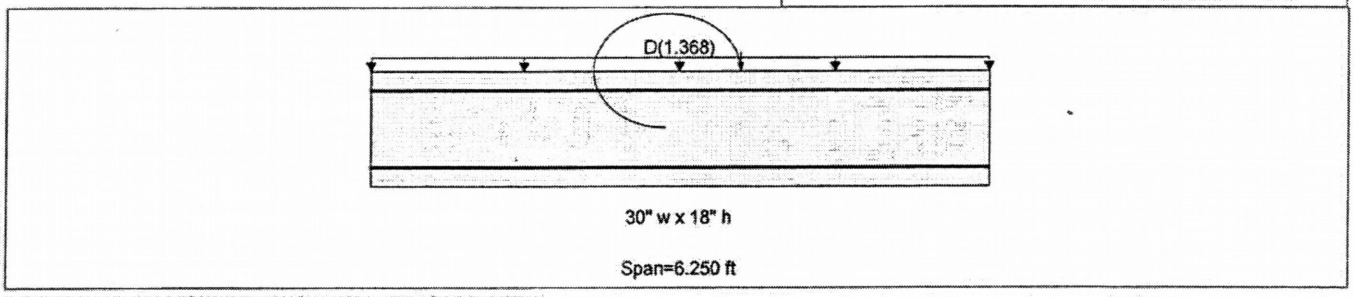


## Cross Section & Reinforcing Details

Rectangular Section, Width = 30.0 in, Height = 18.0 in
Span #1 Reinforcing....
3-#4 at 3.0 in from Bottom, from 0.0 to 6.250 ft in this span
3-#4 at 3.0 in from Top, from 0.0 to 6.250 ft in this span

## Applied Loads

Service loads entered. Load Factors will be applied for calculations.

**Load for Span Number 1**
Moment : W = 21.10 k-ft, Location = 3.0 ft from left end of this span
Uniform Load : D = 1.368 k/ft, Tributary Width = 1.0 ft

## DESIGN SUMMARY

**Design OK**

Maximum Bending Stress Ratio = **0.390** : 1
Section used for this span **Typical Section**
Mu : Applied 17.755 k-ft
Mn * Phi : Allowable 45.551 k-ft
Load Combination +0.90D+1.60W+1.60H
Location of maximum on span 3.015 ft
Span # where maximum occurs Span # 1

Maximum Deflection

| | |
|---|---|
| Max Downward L+Lr+S Deflection | 0.000 in |
| Max Upward L+Lr+S Deflection | 0.000 in |
| Max Downward Total Deflection | 0.090 in |
| Max Upward Total Deflection | -0.174 in |

Maximum Soil Pressure = **3.229** ksf at 6.25 ft

## Vertical Reactions - Unfactored

Support notation : Far left is #1

| Load Combination | Support 1 | Support 2 |
|---|---|---|
| Overall MAXimum | 0.095 | 0.561 |
| D Only | 0.095 | 0.095 |
| D+W | -0.007 | 0.561 |

## Shear Stirrup Requirements

Entire Beam Span Length : Vu < PhiVc/2, Req'd Vs = Not Reqd, use stirrups spaced at 0.000 in

## Maximum Forces & Stresses for Load Combinations

| Load Combination / Segment Length | Span # | Location (ft) in Span | Bending Stress Results ( k-ft ) Mu : Max | Phi*Mnx | Stress Ratio |
|---|---|---|---|---|---|
| MAXimum BENDING Envelope | | | | | |
| Span # 1 | 1 | 3.015 | 17.76 | 45.55 | 0.39 |
| +1.40D | | | | | |

3

ALLSTRUCTURE
Engineering LLC

Title :
Engineer:
Project Desc.:

Title Block Line 1
You can changes this area using the "Settings" menu item and then using the "Printing & Title Block" selection.
Title Block Line 6

Job #

Printed: 23 AUG 2012, 11:43AM

## Beam on Elastic Foundation

File: s:\Projects\2012\12135.00 Hawthorne Apts\CALCULATIONS\hawthorne.ec6
ENERCALC, INC. 1983-2012, Build:6.12.8.20, Ver:6.12.7.31

**Lic. # : KW-06007476** **Licensee : allstructure engineering inc.**

Description : footing

| Load Combination Segment Length | Span # | Location (ft) in Span | Bending Stress Results ( k-ft ) Mu : Max | Phi*Mnx | Stress Ratio |
|---|---|---|---|---|---|
| Span # 1 +1.20D+1.60Lr+0.80W | 1 | 3.015 | | | |
| Span # 1 +1.20D+1.60S+0.80W | 1 | 3.015 | 8.88 | 45.55 | 0.19 |
| Span # 1 +1.20D+0.50Lr+0.50L+1.60W | 1 | 3.015 | 8.88 | 45.55 | 0.19 |
| Span # 1 +1.20D+0.50L+0.50S+1.60W | 1 | 3.015 | 17.76 | 45.55 | 0.39 |
| Span # 1 +0.90D+1.60W+1.60H | 1 | 3.015 | 17.76 | 45.55 | 0.39 |
| Span # 1 | 1 | 3.015 | 17.76 | 45.55 | 0.39 |

### Overall Maximum Deflections - Unfactored Loads

| Load Combination | Span | Max. "-" Defl | Location in Span | Load Combination | Max. "+" Defl | Location in Span |
|---|---|---|---|---|---|---|
| Span 1 | 1 | 0.0897 | 6.250 | Span 1 | -0.1744 | 0.000 |