STRUCTURAL CALCULATIONS

FOR

FREE STANDING SPRAY BOOTHS

3033 NE YEON AVE

PORTLAND, OR 97210

-- SEISMIC REVIEW --

REGISTERED PROFESSIONAL ENGINEER
12,187
OREGON
JULY 15, 1983
JOHN E. NORDLING

EXPIRES: 12 / 31 / 12

12-202689 CO 1

City of Portland
REVIEWED FOR CODE COMPLIANCE
NOV 13 2012
Permit Number

Contents

Details A - B D1 - D2
Calculations C1 - C2

Contact Person: John E Nordling, PE

NORDLING STRUCTURAL ENGINEERS, LLC
6775 SW 111th, Suite 200 · Beaverton OR, 97008

Proj. No.: 12-391
SPRAY PAINT BOOTHS
3033 NW YEON
DAN GLENNON ARCHITECT

Date: NOV 2012 By: JEN Sheet No.: COVER

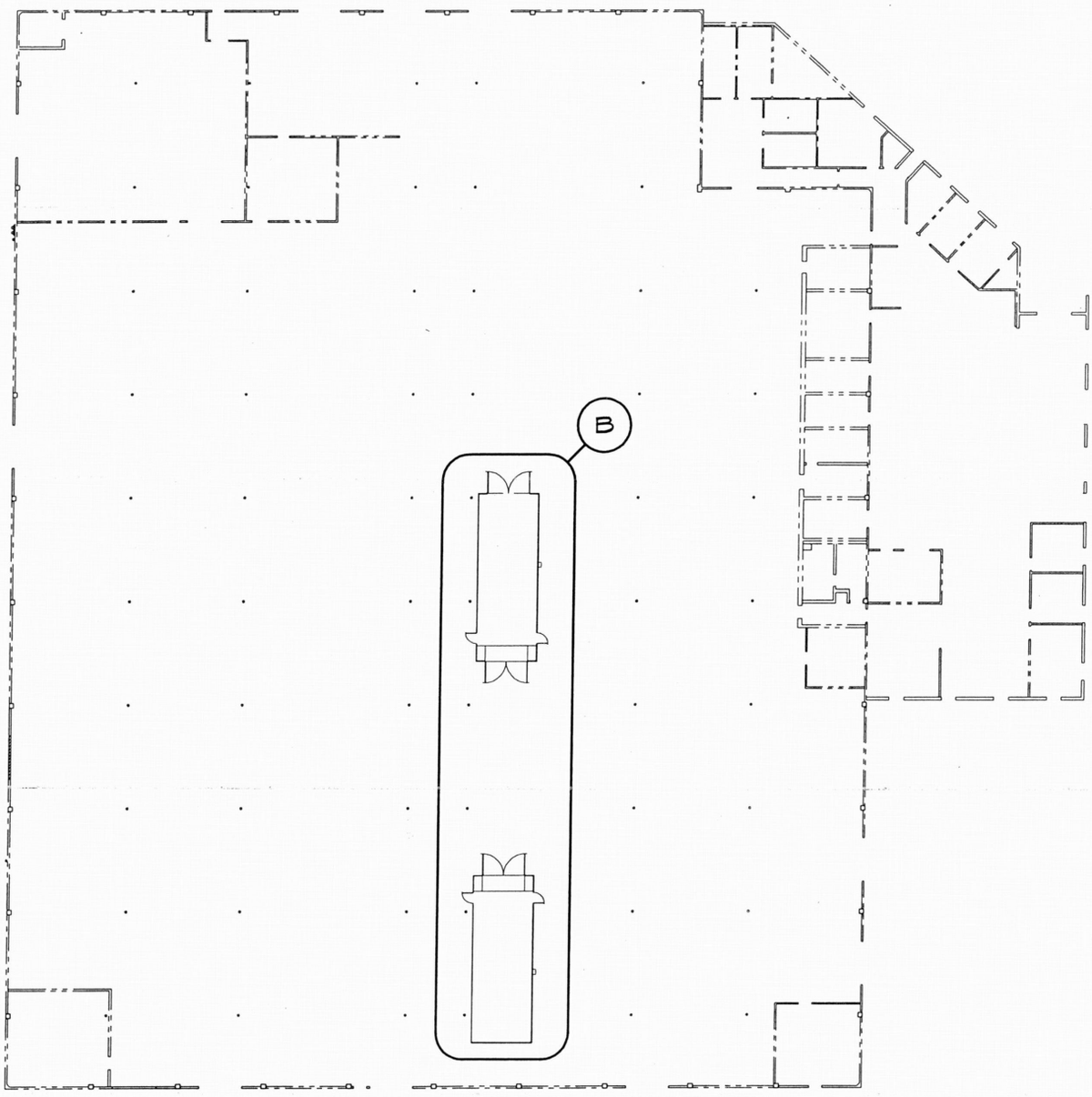

REGISTERED PROFESSIONAL ENGINEER
12,187
OREGON
JULY 15, 1986
JOHN E. NORDLING

EXPIRES: 12 / 31 / 12

A OVERALL PLAN

NORDLING STRUCTURAL ENGINEERS, LLC
6775 SW 111th, Suite 200 · Beaverton OR, 97008

Proj. No.: 12-391
SPRAY PAINT BOOTHS
3033 NW YEON
DAN GLENNON ARCHITECT

Date: NOV 2012 By: JEN Sheet No.: D1

NORTH PAINT SPRAY BOOTH = 5,000 lbs

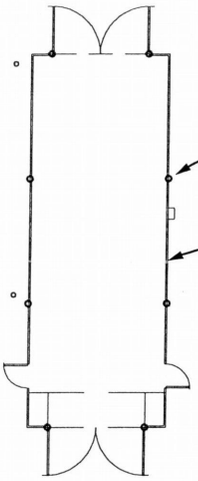

(8) ½'φ HILTI 'KWIK BOLT' EXPANSION ANCHORS (2" EMBED)

0.145 x 1" P.A.F. @36" o/c AROUND PERIMETER

THE TWO PAINT SPRAY BOOTHS HAVE BEEN ATTACHED TO THE EXISTNG CONCRETE FLOOR SLAB WITH A COMBINATION OF EXPANSION ANCHORS AND POWDER ACTUATED FASTENERS (P.A.F.) AS NOTED.

THE AS-BUILT CONNECTIONS ARE ACCEPTABLE TO RESIST SEISMIC LOADS.

SOUTH PAINT SPRAY BOOTH = 6,000 lbs

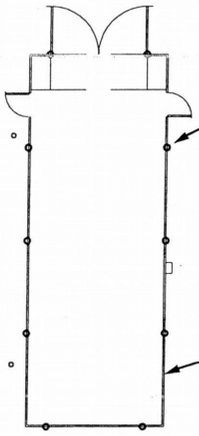

(10) ½'φ HILTI 'KWIK BOLT' EXPANSION ANCHORS (2" EMBED)

0.145 x 1" P.A.F. @36" o/c AROUND PERIMETER

REGISTERED PROFESSIONAL ENGINEER 12187 OREGON JULY 15, 1983 JOHN E. NORDLING

EXPIRES: 12 / 31 / 12

B SEISMIC ANCHORAGE

NORDLING STRUCTURAL ENGINEERS, LLC
6775 SW 111th, Suite 200 · Beaverton OR, 97008

Proj. No.: 12-391
SPRAY PAINT BOOTHS
3033 NW YEON
DAN GLENNON ARCHITECT

Date: NOV 2012 By: JEN Sheet No.: D2

USGS
Earthquake Hazards Program

2005 ASCE 7 Standard

Lat: 45° 32' 35.06" N
Long: 122° 42' 5.28" W

Ss and S1 = Mapped Spectral Acceleration Values
3033 NW Yeon Ave, Portland, OR

Ground Motion	**Ss**	**0.984**	**S1**	**0.348**

Occupancy Category	II	
Site Class	D	
Importance Factor	1.00	
Height of Structure	25.0	ft

Site Coefficients

F_a	1.11	
F_v	1.70	
S_{MS} $F_a * S_S$	1.089	
S_{M1} $F_v * S_1$	0.593	
S_{DS} (2/3) S_{MS}	**0.726**	
S_{D1} (2/3) S_{M1}	**0.395**	

Seismic Design Category
SDC D

Light Framed walls with steel sheet shear panels
R 6.5

Structural Period	T	0.224
	C_t	0.020
	x	0.75
C_S	S_{DS} I / R	0.112
$C_{S\,MAX}$	S_{DS} I / T R	0.272
$C_{S\,MIN}$	0.044 S_{DS} I	0.032

V	$C_S * W_P$	**0.112**	W_P
ASD	= V * 0.7	**0.078**	W_P

NORDLING STRUCTURAL ENGINEERS, LLC
6775 SW 111th, Suite 200 · Beaverton OR, 97008

Proj. No.: 12-391
SPRAY PAINT BOOTHS
3033 NW YEON
DAN GLENNON ARCHITECT
Date: NOV 2012 By: JEN Sheet No.: C1

FRONT DOOR OPENING

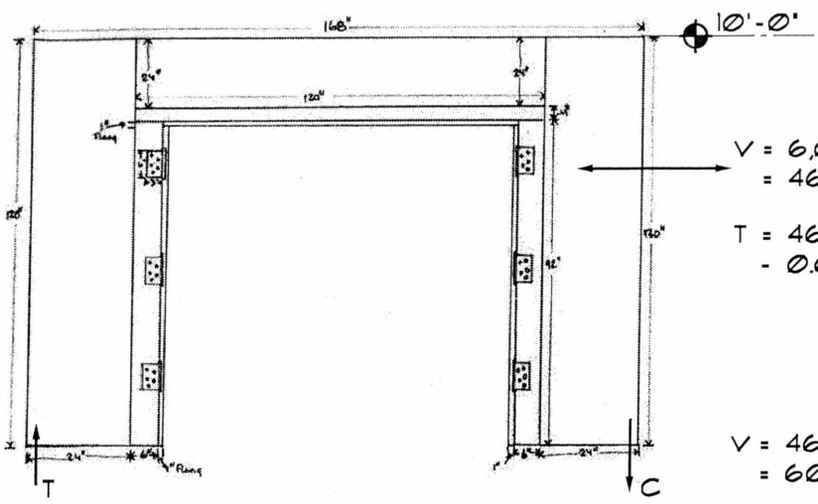

V = 6,000 lbs • 0.078
= 468 lbs

T = 468 lbs • (3/4) 10'-0" / 168" = 250 lbs
- 0.6 • 6,000 lbs / 2 = -1800 lbs
= -1,550 lbs

ZERO NET TENSION

V = 468 lbs / (8) Anchors (min)
= 60 lbs MAX

½"Φ EXPANSION ANCHOR
V_{ALL} = 1,000 lbs > 60 lbs -ok-

NORDLING STRUCTURAL ENGINEERS, LLC
6775 SW 111th, Suite 200 · Beaverton OR, 97008

Proj. No.: 12-391
SPRAY PAINT BOOTHS
3033 NW YEON
DAN GLENNON ARCHITECT
Date: NOV 2012 By: JEN Sheet No.: C2

STRUCTURAL CALCULATIONS

FOR

ROOF PENETRATIONS

3033 NE YEON AVE

PORTLAND, OR 97210

REGISTERED PROFESSIONAL ENGINEER
12,187
OREGON
JULY 15, 1983
JOHN E. NORDLING

EXPIRES: 12 / 31 / 12

City of Portland
REVIEWED FOR CODE COMPLIANCE
NOV 13 2012
Permit Number

Contents

Details A - B D1 - D2
Calculations C1 - C2

Contact Person: John E Nordling, PE

NORDLING STRUCTURAL ENGINEERS, LLC
6775 SW 111th, Suite 200 · Beaverton OR, 97008

Proj. No.: 12-391
ROOF OPENINGS
3033 NW YEON
DAN GLENNON ARCHITECT

Date: OCT 2012 By: JEN Sheet No.: COVER

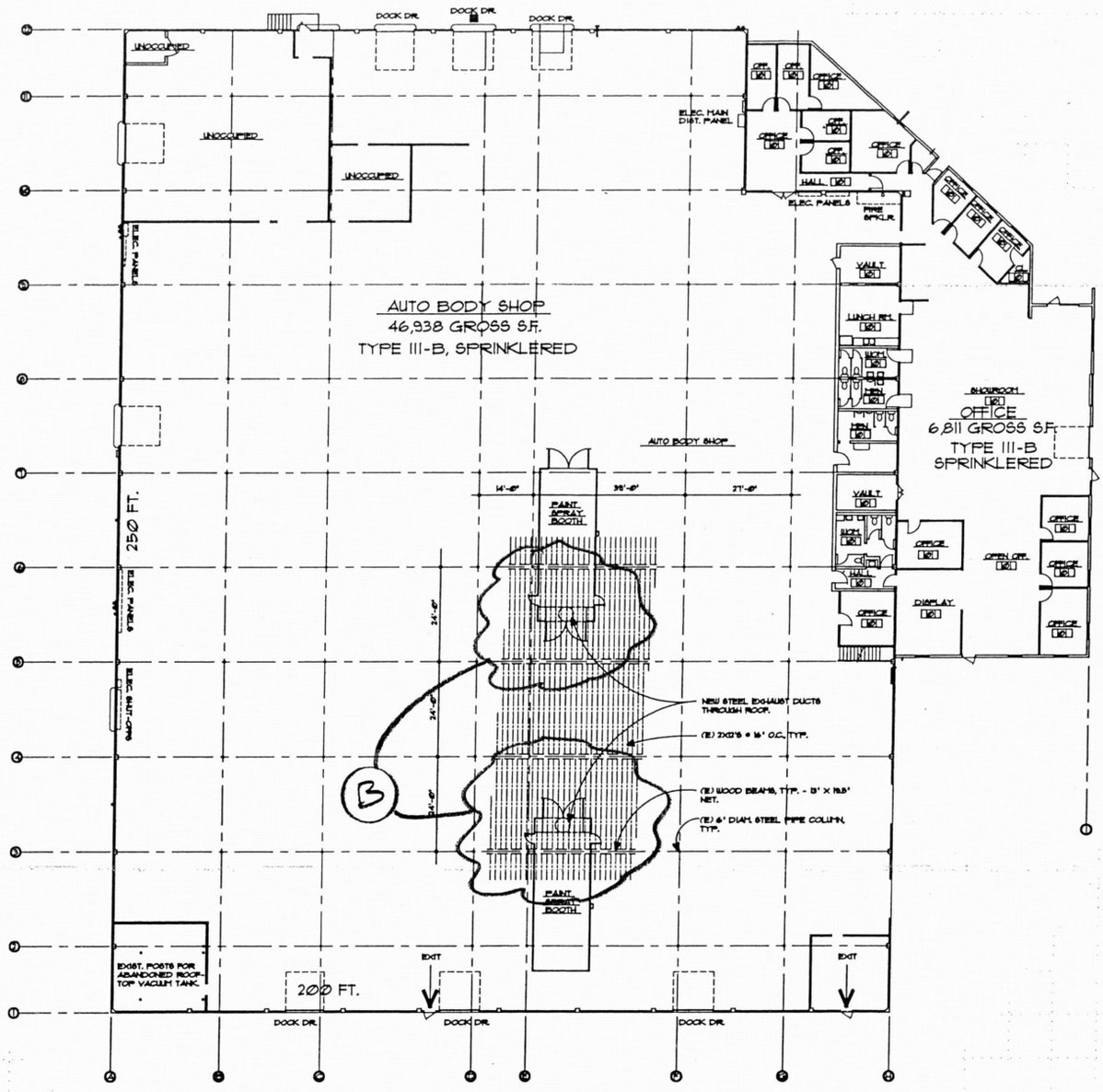

A Roof Plan

REGISTERED PROFESSIONAL ENGINEER
12,187
OREGON
JULY 15, 1983
JOHN E. NORDLING

EXPIRES: 12 / 31 / 12

NORDLING STRUCTURAL ENGINEERS, LLC

6775 SW 111th, Suite 200 · Beaverton OR, 97008

Proj. No.: 12-391

ROOF OPENINGS
3033 NW YEON

DAN GLENNON ARCHITECT

Date: OCT 2012 By: JEN Sheet No.: D1

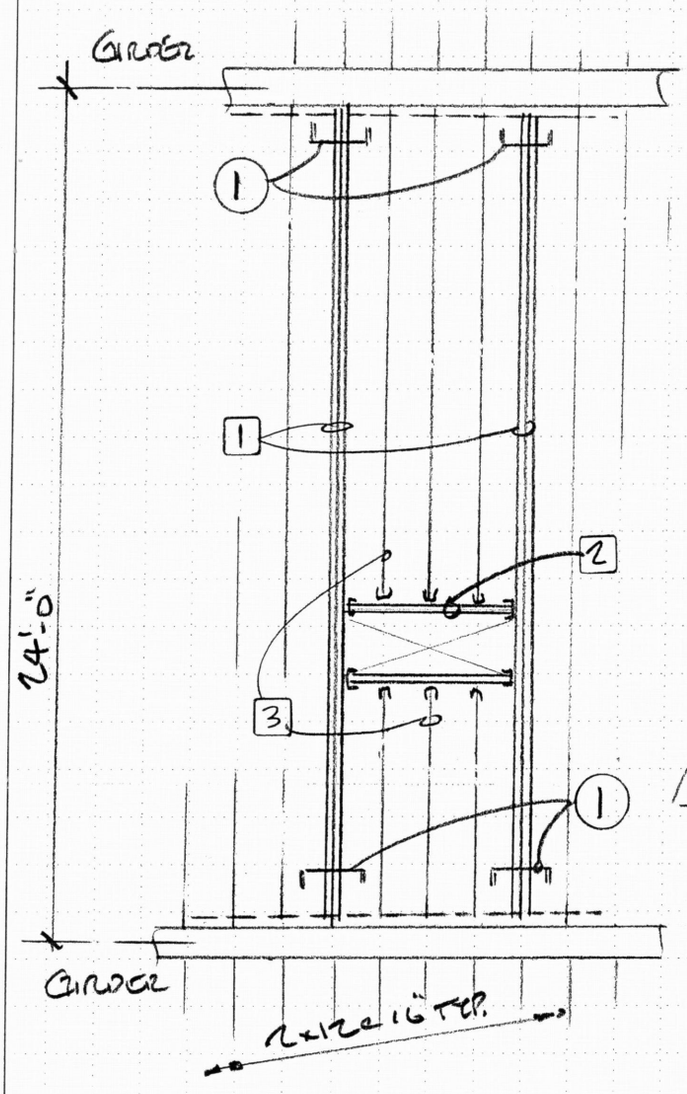

1 1¾x11¼ MICRO-LAM 'LVL' EA. SIDE OF 2x12 - SEE 1

2 (2)2x12 w/ SIMPSON 'U210-2'

3 SUPPORT EXISTING 2x12's FROM DBL. 2x12 w/ SIMPSON 'U' HANGERS

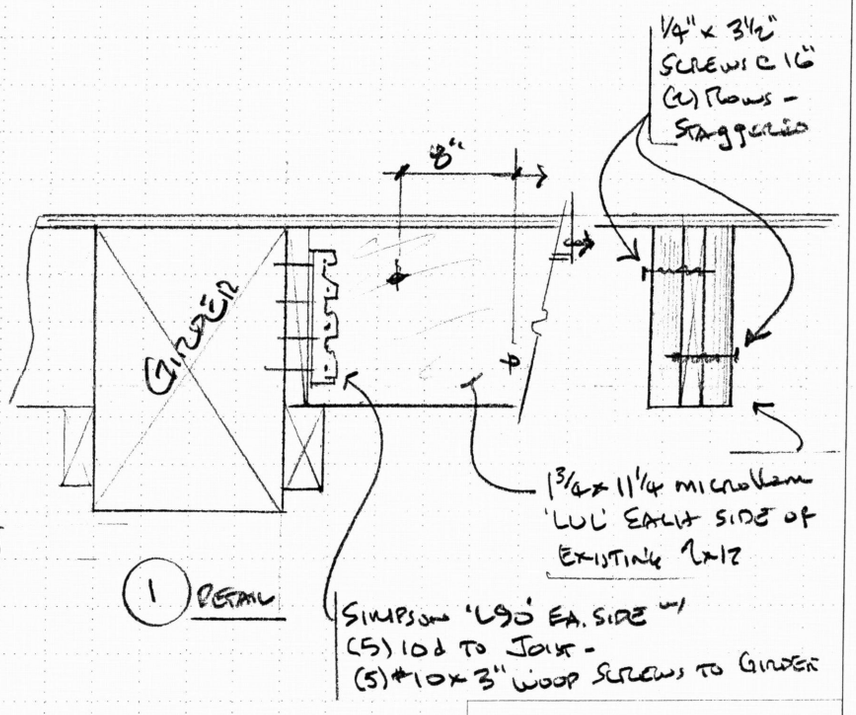

B ENLARGED PLAN

REGISTERED PROFESSIONAL ENGINEER 12,187 OREGON JULY 15, 1983 JOHN E. NORDLING

EXPIRES: 12 / 31 / 12

NORDLING STRUCTURAL ENGINEERS, LLC

6775 SW 111th, Suite 200 · Beaverton OR, 97008

Proj. No.: 12-391

ROOF OPENINGS
3033 NW YEON

DAN GLENNON ARCHITECT

Date: OCT 2012 By: JEN Sheet No.: D2

(A) HEADER

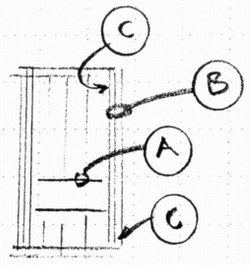

Conservative

W_{LL}: 25(24/12) = 275
D_L: 15(24/12) = 175
450#

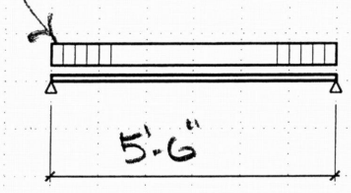

(2) 2×12

(B) EDGE BEAM

P_{LL}: 25(24/12)(5.5/12) = 825
D_L: 15(24/12)(5.5/12) = 500) 1325#

W_{LL}: 20
D_L: (10) 30#

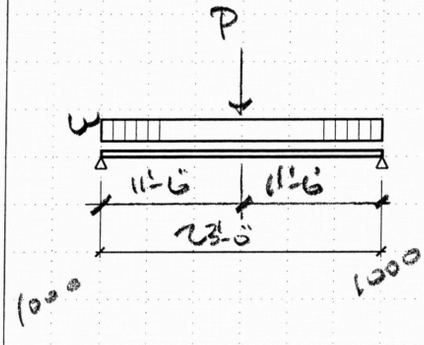

W (2) 1 3/4 × 11 1/4 LVL
PLUS 2×12 => 4" EQUIV. WIDTH

(2) 1 3/4 × 11 1/4 LVL
(1) 2×12

(C) SUPPORT AT BEAM

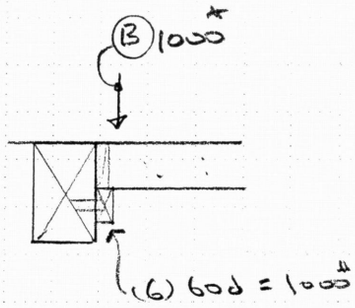

ADD 'L90' TO SIDE OF TRIPLE BM TO BLOCKING/ ATTACH BLOCKING TO BM. W/ (5) #10 SCREWS

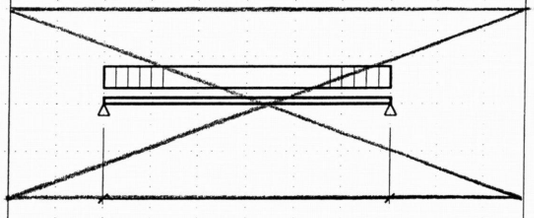

NORDLING STRUCTURAL ENGINEERS, LLC
6775 SW 111th, Suite 200 · Beaverton OR, 97008

Proj. No.: 12-391
ROOF OPENINGS
3033 NW YEON
DAN GLENNON ARCHITECT
Date: OCT 2012 By: JEN Sheet No.: C1

Nordling Structural Engineers, LLC
6775 SW 111th #200
Beaverton, OR 97008

MULTI-SPAN TIMBER BEAM DESIGN

ROOF PENETRATION AT 3033 NW YEON - PORTLAND

			A-(TL)	B-(TL)	B-(TL)	B-(TL)	C-(TL)
GENERAL DATA			**1**	**3**	**4**	**5**	**7**
All Spans Simple Support ??		:	YES				
Spans Length		ft :	5.50	23.00	23.00	23.00	23.00
End Fixity:		:	Pin:Pin	Pin:Pin	Pin:Pin	Pin:Pin	Pin:Pin
Beam Width		in :	3.000	4.500	3.500	4.000	1.500
Beam Depth		in :	11.25	11.25	11.25	11.25	11.25
CALCULATED VALUES			-OK-	No Good!	-OK-	-OK-	-OK-
F'b-Modified Allow.		psi :	1190.3	1190.3	2990.0	2990.0	1190.3
fb - Actual.		psi :	322.7	1213.9	1560.8	1365.7	1128.5
F'v-Modified Allow.		psi :	207.0	207.0	304.8	304.8	207.0
fv (actual) * 1.5		psi :	35.9	29.0	37.3	32.7	42.3
Moment @ Left		k-in :	0.0	0.0	0.0	0.0	0.0
Moment @ Right		k-in :	0.0	0.0	0.0	0.0	0.0
Max. Mom. @ Mid-Span		k-in :	20.4	115.2	115.2	115.2	35.7
	X-Dist	ft :	2.75	11.50	11.50	11.50	11.50
Shears:	Left	k :	1.24	1.01	1.01	1.01	0.52
	Right	k :	-1.24	-1.01	-1.01	-1.01	-0.52
Reaction @ Left	DL	k :	0.48	0.36	0.36	0.36	0.14
	LL	k :	0.76	0.64	0.64	0.64	0.38
	Total	k :	1.24	1.01	1.01	1.01	0.52
Reaction @ Right	DL	k :	0.48	0.36	0.36	0.36	0.14
	LL	k :	0.76	0.64	0.64	0.64	0.38
	Total	k :	1.24	1.01	1.01	1.01	0.52
Max. Defl. @ Mid Span		in :	-0.016	-0.900	-0.975	-0.853	-0.995
	X-Dist	ft :	2.75	11.50	11.50	11.50	11.50
DESIGN DATA							
Le: Unsupported Length		ft :	0.00	0.00	0.00	0.00	0.00
Fb:Basic Allowable		psi :	1035.0	1035.0	2600.0	2600.0	1035.0
Fv:Basic Allowable		psi :	180.0	180.0	265.0	265.0	180.0
Elastic Modulus		ksi :	1600	1600	1900	1900	1600
Load Duration Factor		:	1.15	1.15	1.15	1.15	1.15
APPLIED LOADS							
Use Live Load on This Span		?	Yes	Yes	Yes	Yes	Yes
Uniform.....	DL	plf :	175.0	10.0	10.0	10.0	12.0
	LL	plf :	275.0	20.0	20.0	20.0	33.0
Point.....	DL	# :		500.00	500.00	500.00	
	LL	# :		825.00	825.00	825.00	
	X-Dist.	ft :		11.50	11.50	11.50	
QUERY VALUES							
Location		ft :	0.00	0.00	0.00	0.00	0.00
Shear		# :	1.24	1.01	1.01	1.01	0.52
Moment		k-in :	0.00	0.00	0.00	0.00	0.00
Deflection		in :	0.000	0.000	0.000	0.000	0.000

C2