Building Permit Application
City of Portland, Oregon - Bureau of Development Services

1900 SW 4th Avenue, Portland, Oregon 97201 • 503-823-7310 • TTY 503-823-6868 • www.portlandoregon.gov/bds

This permit application expires if a permit is not obtained within 180 days after it has been accepted as complete.

Type of work

- ☐ New construction
- ☐ Addition/alteration/replacement
- ☒ Demolition
- ☐ Other:

Category of construction

- ☐ 1 & 2 family dwelling
- ☒ Commercial/industrial
- ☐ Accessory building
- ☐ Multifamily
- ☐ Master builder
- ☐ Other:

Job site information and location

Job no.: 9259 | Job address: 620 N. Fremont St

City/State/ZIP: Portland OR

Suite/bldg./apt. no.: | Project name: Boise-Eliott Elementary

Cross street/directions to job site: Fremont + 6th

Subdivision: | Lot no. | Tax map/parcel no.

Description of work

Demo Concrete mezzanine in library

☐ Reference RS / Combination | Permit no.

☐ Property owner / ☐ Tenant

Name: Portland Public Schools

Address: 510 N. Dixon St

City/State/ZIP: Portland OR

Phone: | FAX:

Owner installation: This installation is being made on property that I own, which is not intended for sale, lease, rent, or exchange.

Owner signature: Date:

☒ Contractor

Business name: INLINE COMMERCIAL CONST

Address: 18880 SW SHAW ST

City/State/ZIP: ALOHA, OR, 97007

Phone: 503-915-5118 | FAX:

CCB lic. no. 51880

Authorized signature: [signature]

Print name: TRYGVE BERGE Date: 11/2/12

☐ Applicant / ☐ Contact Person

Business name:

Contact name:

Address:

City/State/ZIP:

Phone: | FAX:

E-mail:

Authorized signature:

Print name: Date:

Office Use Only

Permit no:

Date received:

By:

Required Data: One and Two Family Dwelling

Permit fees* are based on the value of the work performed. Indicate the value (rounded to the nearest dollar) of all equipment, materials, labor, overhead, and the profit for the work indicated on this application.

Valuation:	
Number of bedrooms:	
Number of bathrooms:	
Total number of floors:	
New dwelling area:	square feet
Garage/carport area:	square feet
Covered porch area:	square feet
Deck area:	square feet
Other structure area:	square feet

Required Data: Commercial Use

Permit fees* are based on the value of the work performed. Indicate the value (rounded to the nearest dollar) of all equipment, materials, labor, overhead, and the profit for the work indicated on this application.

Valuation:	22,000
Existing building area:	square feet
New building area:	square feet
Number of stories:	
Type of construction:	
Occupancy groups	
Existing:	
New:	

Notice

All contractors and subcontractors are required to be licensed with the Oregon Construction Contractors Board under ORS 701 and may be required to be licensed in the jurisdiction in which work is being performed. If the applicant is exempt from licensing, the following reasons apply.

Statement of Fact: I certify that the facts and information set forth in this application are true and complete to the best of my knowledge. I understand that any falsification, misrepresentation or omission of fact (whether intentional or not) in this application or any other required document, as well as any misleading statement or omission, may be cause for revocation of permit and/or certificate of occupancy, regardless of how or when discovered.

Building Permit Fees*

Please refer to fee schedule

Fees due upon application	
Amount received	
Date received	

Sub-contractor information can be faxed to 503-823-7693.

HAZARDOUS MATERIAL NOTES

1. THE CONTRACTOR SHALL ASSUME LEAD PAINT AND VARNISH IS PRESENT THROUGHOUT THE BUILDING UNLESS NOTED OTHERWISE IN THE SURVEY DOCUMENTS. PERFORM AL WORK IN ACCORDANCE WITH OR-OSHA (OAR CHAPTER 437 DIVISION 3, 1926.62) WHEN WORKING IN AREAS OF BUILDINGS OCCUPIED BY CHILDREN AGES 6 YEARS AND UNDER. REQUIREMENTS UNDER OAR-333-DIVISION 69 MAY ALSO APPLY.

2. ASBESTOS MATERIALS (ACM'S) ARE PRESENT IN VARIOUS LOCATIONS THROUGHOUT THE BUILDING. IT IS THE INTENT OF PORTLAND PUBLIC SCHOOLS TO ABATE ONLY MATERIALS THAT ARE AN OBSTRUCTION, PART OF DEMOLITION OR NECESSARY TO COMPLETE THE RENOVATION. ALL ABATEMENT WORK WILL BE CONDUCTED BY PORTLAND PUBLIC SCHOOLS UNDER A SEPARATE CONTRACT. THE GENERAL CONTRACTOR AND ITS SUB-CONTRACTORS ARE REQUIRED TO FAMILIARIZE THEMSELVES WITH ASBESTOS AND ASBESTOS HAZARDS WITHIN THE BUILDING. PROVIDE HAZARD COMMUNICATION, TRAINING AND PERSONAL PROTECTION EQUIPMENT AS NECESSARY TO WORK IN OR AROUND AREAS WITH ASBESTOS MATERIALS. THE GENERAL CONTRACTOR SHALL STRICTLY ENFORCE IMPLEMENTATION OF OR-OSHA (OAR CHAPTER 437 DIVISION 3, SUBDIVISION Z 1926.1101) REQUIREMENTS DURING THE PERFORMANCE OF WORK UNDER THIS CONTRACT.

3. DOCUMENTS OF REFERENCE FOR INFORMATION ON THE TYPE, QUANTITY AND LOCATION OF KNOWN ACM'S ARE AS FOLLOWS:1) PORTLAND PUBLIC SCHOOL DISTRICT'S AHERA ASBESTOS INSPECTION REPORT AND MANAGEMENT PLAN. 2. HAZARDOUS MATERIALS SURVEY/ABATEMENT DRAWINGS FOR 2002/2003 BOND RENOVATION WORK. ALL SUBCONTRACTORS ARE TO NOTIFY THE GENERAL CONTRACTOR IF SUSPECT ACM'S ARE UNCOVERED DURING DEMOLITION OR RENOVATION ACTIVITIES THAT ARE NOT IDENTIFIED IN THESE DOCUMENTS. COORDINATE WITH THE DISTRICT'S HAZARDOUS MATERIALS CONSULTANT AS NECESSARY TO ACCOMMODATE TESTING AND ABATEMENT WORK.

4. FOR THIS PROJECT, THE GENERAL CONTRACTOR AND ITS SUB-CONTRACTORS SHALL COMPLY WITH ALL POSSIBLE OSHA REQUIREMENTS WHEN WORKING IN FRIABLE ASBESTOS CONTAMINATED AREAS. THIS INCLUDES BUT IS NOT LIMITED TO FLOOR AND ATTIC CRAWL SPACES IF THOSE CONDITIONS EXIST IN A BUILDING. OSHA REQUIREMENTS ALSO APPLY WHEN WORKING ON OR AROUND NON-FRIABLE ACM. THIS INCLUDES BUT IS NOT LIMITED TO: ANCHORAGE THROUGH ACM FLOORING, ANCHORAGE OF WIRE MOLDING AND FIXTURES ONTO ACM PLASTER OR GYPSUM WALLS AND CEILINGS, AND IMPACTING ACM ROOFING MATERIALS.

WORK IN
PUBLIC RIGHT - OF - WAY IS
NOT APPROVED AS PART OF
THIS BUILDING PERMIT

GENERAL NOTES

1. ALL WORK BY THE CONTRACTOR SHALL CONFORM TO THE LATEST APPLICABLE BUILDING CODES, AND COMPLY WITH ALL GOVERNING LAWS, CODES, ORDINANCES, RULES AND REGULATIONS OF CITY, COUNTY, STATE, AND FEDERAL JURISDICTION WHERE PROJECT IS LOCATED. FURTHER ALL WORK SHALL COMPLY WITH THE REQUIREMENTS OF THE ADA, AMERICANS WITH DISABILITIES ACT, AS AMENDED BY APPLICABLE LOCAL REGULATIONS. THE CONTRACTOR SHALL REPORT TO THE ARCHITECT, ENGINEER, AND PROJECT MANAGER ANY REQUIREMENTS OF THE CONTRACT DOCUMENTS WHICH CONFLICT WITH ANY SUCH REGULATIONS OF WHICH HE/SHE IS AWARE BEFORE CONTINUING WITH THE WORK.

2. THE CONTRACTOR SHALL CAREFULLY STUDY AND COMPARE THE CONTRACT DOCUMENTS AND SHALL REPORT TO THE ARCHITECT, ENGINEER, AND PROJECT MANAGER ANY ERROR, INCONSISTENCY, OR OMISSION THAT MAY BE DISCOVERED.

3. PRIOR TO BID SUBMITTAL, THE CONTRACTOR SHALL VISIT THE SITE OF THE PROPOSED WORK AND CAREFULLY EXAMINE THE EXISTING CONDITIONS, WHETHER OR NOT SHOWN ON THE DRAWINGS. BY SIGNING THE CONTRACT; THE CONTRACTOR SHALL WAIVE HIS/HER RIGHTS TO EXTRA COMPENSATION FOR CONDITIONS WHICH COULD HAVE BEEN AVOIDED BY A CAREFUL EXAMINATION OF THE EXISTING CONDITIONS.

4. WHEREVER THE WORD "CONTRACTOR" IS USED IN THE PLANS AND SPECIFICATIONS, IT SHALL ALSO MEAN ANY SUBCONTRACTOR, AGENTS OF CONTRACTOR, INSTALLER, SUPPLIER, AND THE LIKE.

5. DO NOT SCALE DRAWINGS.

6. CONTRACTOR SHALL COORDINATE ALL WORK WITH THE WORK OF OTHER CONTRACTORS, THE WORK OF THE OWNER, AND THE WORK OF OTHER COMPONENT SYSTEM MANUFACTURERS.

7. CONTRACTOR SHALL FIELD VERIFY ALL EXISTING DIMENSIONS AND ELEVATIONS.

8. ALL WORK AT THE SITE SHALL CONFORM TO FACILITY, OWNER, AND PUBLIC AGENCY--HAVING JURISDICTION, SAFETY, SECURITY, OPERATION RULES, AND REGULATIONS INCLUDING BUT NOT LIMITED TO ACCESS, STAGING, & STORAGE AREAS.

9. ON-SITE STORAGE/DISPOSAL OF VOLATILE, HARMFUL, OR STAINING COMPOUNDS IS PROHIBITED UNLESS APPROVED IN WRITING BY OWNER.

10. PERFORMANCE OF WORK IN A MANNER HARMFUL TO USER GROUPS, PUBLIC, PEDESTRIANS, PATRONS, STAFF, VISITORS, AND NEIGHBORING PROPERTIES IS PROHIBITED.

GENERAL - NOTES CONTINUED

11. CONTRACTOR SHALL TAKE ALL REQUIRED MEASURES TO ENSURE LIFE AND SAFETY OF USER GROUPS, PUBLIC, PATRONS, STAFF, VISITORS, PEDESTRIANS, AND NEIGHBORING PROPERTIES.

12. CONTRACTOR SHALL INVESTIGATE THE EXISTENCE AND LOCATION OF POSSIBLE HIDDEN UTILITIES AND OTHER POSSIBLE OBSTRUCTIONS TO THE PERFORMANCE OF THE WORK.

13. CONTRACTOR SHALL PROVIDE REQUIRED SHORING, BRACING, AND OTHER METHODS AS REQUIRED TO ENSURE THE STABILITY OF COMPONENTS INDICATED FOR SELECTIVE DEMOLITION, EXISTING AND NEW CONSTRUCTION, AND ANY OTHER AFFECTED SURROUNDING COMPONENTS. CONTRACTOR IS SOLELY RESPONSIBLE FOR THE DESIGN, CONSTRUCTION, MAINTENANCE, AND REMOVAL OF ALL SHORING AND BRACING. REPAIR OF DAMAGE RESULTING FROM IMPROPER SHORING AND BRACING IS AT THE EXPENSE OF THE CONTRACTOR.

14. CONSTRUCTION DOCUMENTS CONSIST OF ARCHITECTURAL AND SPECIALTY CONSULTANT DRAWINGS AND SPECIFICATIONS. IN SOME CASES THE SPECIFICATIONS MAY BE ON THE DRAWINGS ONLY. INFORMATION PERTAINING TO THE WORK IS LOCATED THROUGHOUT THE CONSTRUCTION DOCUMENTS. IT IS THE RESPONSIBILITY OF THE CONTRACTOR AND ITS SUBCONTRACTORS AND AGENTS TO REVIEW ALL THE DRAWINGS AND SPECIFICATIONS IN THEIR ENTIRETY FOR ITEMS PERTAINING TO OR RELATED TO THE WORK.

15. WHERE WORK INVOLVES A PUBLIC AGENCY THEN THE CONSTRUCTION DOCUMENTS ALSO INCLUDE THE PUBLIC AGENCY'S PROPRIETARY DIVISION 1 SPECIFICATIONS, INSTRUCTIONS TO BIDDERS, AND OTHER GENERAL CONDITIONS OF THE CONTRACT REQUIREMENTS. WHERE PUBLIC AGENCY SPECIFICATIONS AND CONTRACT REQUIREMENTS ARE REFERENCED IN THE HARD OR ELECTRONIC COPY OF THE CONSTRUCTION DOCUMENTS BUT NOT INCLUDED IN THE HARD OR ELECTRONIC COPY OF THE CONSTRUCTION DOCUMENTS THEN IT IS THE RESPONSIBILITY OF THE CONTRACTOR TO OBTAIN ALL APPLICABLE PUBLIC AGENCY SPECIFICATIONS AND CONTRACT REQUIREMENTS THAT APPLY TO THE WORK.

16. ANY WORK PERFORMED AFFECTING EXISTING SURFACES IS REQUIRED TO BE PATCHED AND PAINTED TO MATCH ADJACENT AND OR EXISTING UNLESS INDICATED OTHERWISE. THIS INCLUDES MATCHING EXISTING COMPONENT DIMENSIONS, PROFILES, LOCATIONS, ELEVATIONS, CONSTRUCTION, THICKNESSES, COLORS, TEXTURES, PATTERNS, SHEENS, AND SURFACES AND PERTAINS TO SUBSTRATES AND FINISHED SURFACES.

17. CONTRACTOR TO COORDINATE WORK WITH UTILITIES AFFECTED BY CONSTRUCTION WORK.

GENERAL - NOTES CONTINUED

18. GENERAL NOTES APPLY TO ALL DRAWINGS AND THE SPECIFICATIONS.

19. CONTRACTOR SHALL INCLUDE IN HIS/HER BID ALL REASONABLY FORESEEABLE WORK NECESSARY TO ADOPT THE EXISTING STRUCTURES AND SYSTEMS TO ACCOMMODATE THE NEW CONSTRUCTION AND WORK.

20. REINSTALLED EXISTING COMPONENTS THAT ARE DAMAGED, MARRED, DEFORMED, BROKEN, CRACKED, SCRATCHED, OR DEFACED DURING THE EXECUTION OF WORK WILL BE REPLACED WITH NEW COMPONENTS, FREE OF SUCH DEFECTS, TO MATCH EXISTING AT NO ADDITIONAL COST.

21. CONTRACTOR'S REPRESENTATIVE MUST BE PRESENT ON SITE WHEN WORK IS BEING PERFORMED ON SITE.

22. HARD COPIES OF THE DRAWINGS AND SPECIFICATIONS ARE THE OFFICIAL DRAWINGS AND SPECIFICATIONS OF RECORD FOR THE PROJECT. LGA ARCHITECTURE IS NOT RESPONSIBLE FOR ANY ACTS OF NEGLIGENCE RESULTING FROM OR CONTRIBUTED BY INFORMATION ALTERED OR MODIFIED INTENTIONALLY OR UNINTENTIONALLY IN ELECTRONIC VERSIONS OF THE DRAWINGS AND SPECIFICATIONS OR IN PAPER REPRODUCTIONS OF THE DRAWINGS AND SPECIFICATIONS CREATED FROM ELECTRONIC VERSIONS OF THE DRAWINGS AND SPECIFICATIONS BY ENTITIES OTHER THAN LGA ARCHITECTURE. LGA ARCHITECTURE IS NOT RESPONSIBLE FOR ACTS OF ANY NEGLIGENCE RESULTING FROM OR CONTRIBUTED BY INFORMATION ALTERED OR MODIFIED INTENTIONALLY OR UNINTENTIONALLY ON ANY PROJECT WEB SITES OR RELATED WEB SITES NOT MAINTAINED BY LGA ARCHITECTURE.

23. IN PERFORMING PROFESSIONAL SERVICES FOR THIS PROJECT, LGA ARCHITECTURE OR ANY OF ITS AGENTS, ISSUES, EXPRESSES, IMPLIES, DIRECTLY OR INDIRECTLY NO WARRANTIES OR CERTIFICATIONS.

24. PLANS ARE NOT AS-BUILTS. LAYOUT OF ACTUAL WALLS, EQUIPMENT, AND OR FIXTURES MAY VARY ON-SITE. DISTANCES INDICATED ON PLANS MAY VARY ON-SITE. CONTRACTOR SHALL VERIFY ALL EXISTING CONDITIONS AND DISTANCES PRIOR TO SUBMITTING BIDS. SUBMITTAL OF BIDS ACKNOWLEDGES ACCEPTANCE OF ACTUAL ON-SITE CONDITIONS.

City of Portland
REVIEWED FOR CODE COMPLIANCE
NOV 02 2012
Permit Number

[TKA] space planning/commercial renovation/ interior design/dental/medical
330 SE MLK Blvd. Suite 350
Portland, OR 97214
ph: 503 235 [illegible]
fx: 503 546 [illegible]
TONI KING & ASSOCIATES

AS-BUILT SET FOR
BOSE ELLIOT ELEMENTARY
UPGRADE
620 N FREEMONT ST
PORTLAND, OR 97227

DATE: 10.30.2012
FILE:
JOB: 2012-34-01
DWN: PK | CHK: TK

NOTES

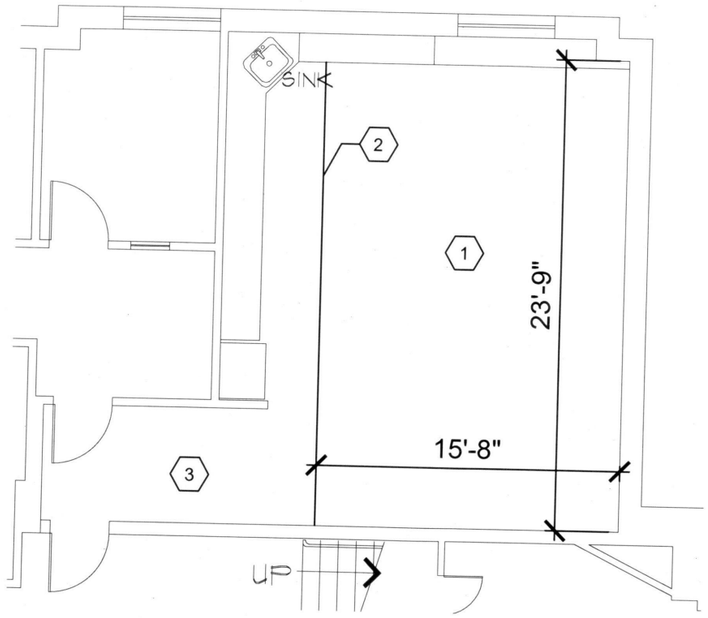

N 1 STAFF ROOM 106

N.T.S.

KEY NOTES

1. DEMO EXISTING CARPET ONLY. PREP FOR NEW RESILIENT FLOORING AND WALL BASE.
2. PROVIDE NEW TRANSITION STRIP
3. EXISTING VINYL FLOOR TO REMAIN AS-IS.

GENERAL NOTES

A. NO PAINT THIS ROOM.

B. FIELD VERIFY MEASUREMENT, TYP.

C. NEW QUARTZ FLOORING AND WALL BASE IN THIS ROOM - COLOR TBD.

City of Portland
REVIEWED FOR CODE COMPLIANCE
NOV 02 2012
Permit Number

[TKA] space planning/commercial renovation/ interior design/dental/medical
330 SE MLK Blvd, Suite 350
Portland Oregon 97214
ph: 503 235 0243
fx: 503 546 5698
TONI KING & ASSOCIATES

AS-BUILT SET FOR
BOISE ELLIOT ELEMENTARY
UPGRADE
620 N FREEMONT ST.
PORTLAND, OR 97227

DATE: 10.30.2012
FILE:
JOB: 2012-34-01
DWN: PK | CHK: TK

RM 106

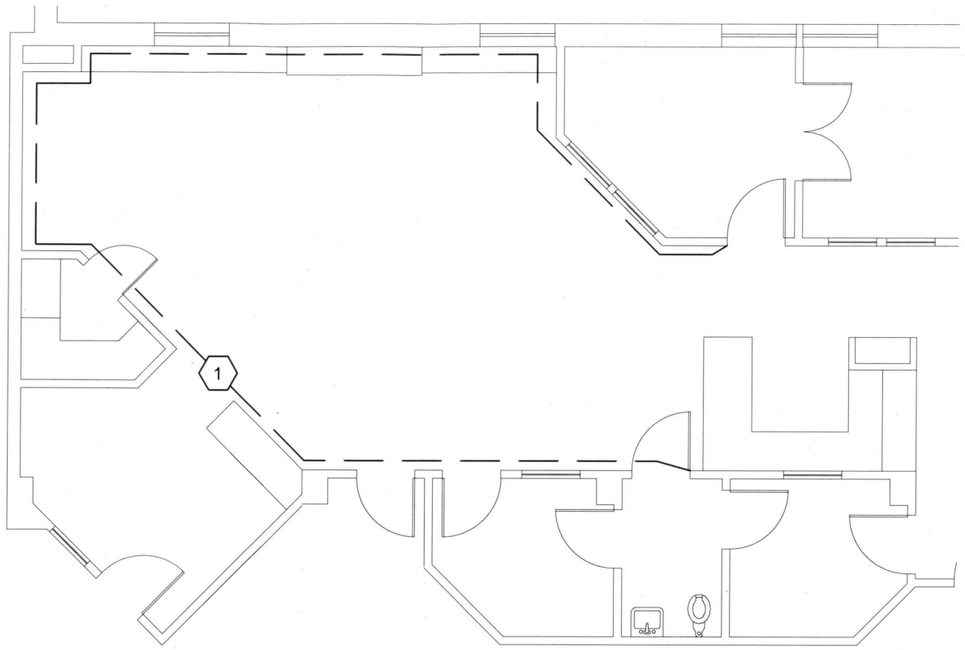

N 1

MAIN OFFICE

N.T.S.

KEY NOTES

1 PAINT WALLS IN MAIN AND PUBLIC AREA ONLY.

GENERAL NOTES

A. PAINT: PAINT WALL SURFACES AS NOTED
EXCLUSION - NO PAINT ON TRIM

B. PAINT: RODDA HEIRLOOM SILVER 8259

C. NO NEW FLOORING IN THIS ROOM

D. CO#7 - CAULK CORNERS, PRIME AND PAINT BELOW COUNTER AT OFFICE AS DIRECTED BY PRINCIPLE.

City of Portland
REVIEWED FOR CODE COMPLIANCE
NOV 02 2012
Permit Number

[TKA] space planning/commercial renovation/ interior design/dental/medical
330 SE MLK Blvd. Suite 350
Portland Oregon 97214
ph: 503 235 0243
fx : 503 546 5698
TONI KING & ASSOCIATES

AS-BUILT SET FOR
BOISE ELLIOT ELEMENTARY
UPGRADE
620 N FREEMONT ST.
PORTLAND, OR 97227

DATE: 10.30.2012
FILE:
JOB: 2012-34-01
DWN: PK | CHK: TK

RM 110

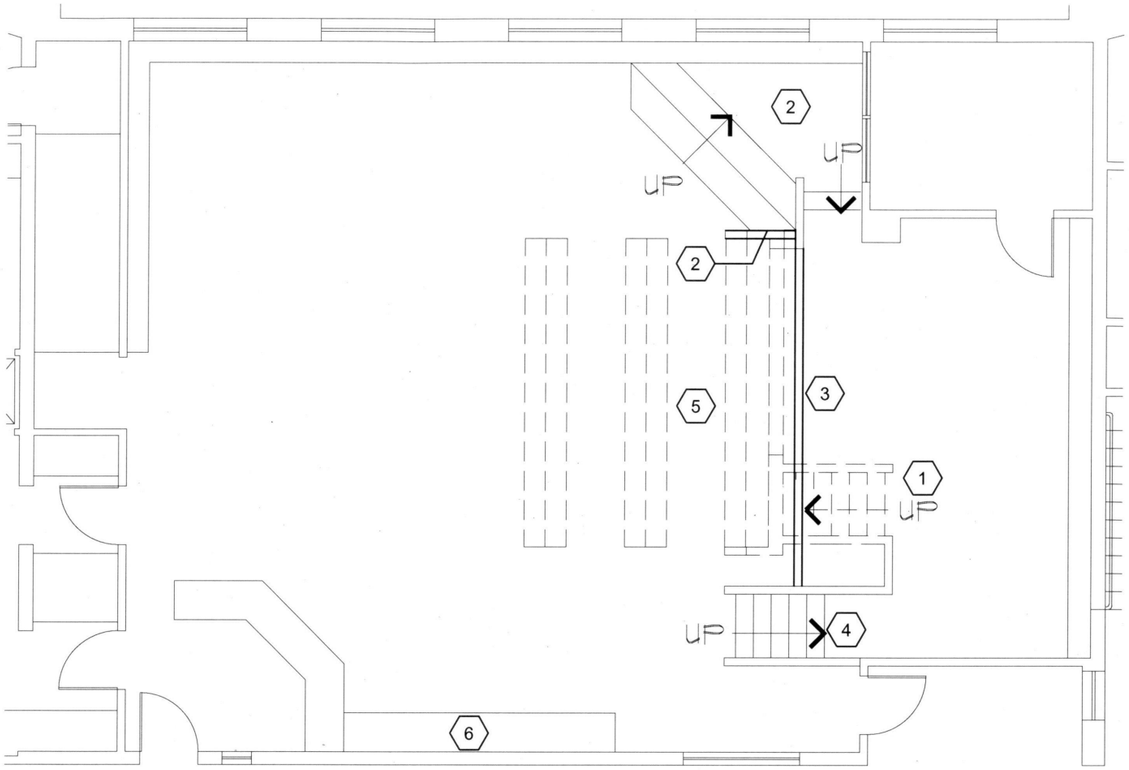

N 1 MEDIA CENTER / LIBRARY MAIN LEVEL

N.T.S.

KEY NOTES

1. DEMO EXISTING STAIR CASE TO MEZZANINE FLOOR.
2. KEEP EXISTING READING AREA. PROVIDE FINISHED END PANEL AFTER REMOVING (E) MEZZANINE SECTION.
3. NEW PLATFORM EDGE.
4. EXISTING STAIR CASE TO PLATFORM REMAIN AS-IS.
5. REMOVE (E) BUILT-IN BOOKCASE. PATCH FLOOR - MATCH EXISTING.
6. REMOVE (E) DESK. INSTALL TENANT PROVIDED (E) BOOKCASES.

BID ALT. 02:
SEE PPS RFQ ITEM# 1.1.2 BID ALT 02-LIBRARY REMODEL ON PAGE 5

PAINT: PREPARE AND PREP ALL WALLS BELOW PICTURE RAIL - RODDA OWC4 OFF WHITE

GENERAL NOTES

A. PAINT: PAINT ALL WALL SURFACES UP TO TRIM EXCLUSION - NO PAINT ON TRIM

B. PERMIT DRAWING SET WILL BE PROVIDED FOR MEZZANINE DEMO AND NEW SHELVING LAYOUT.

C. REUSE LIBRARY MEZZANINE CARPET FLOOR TILES FOR REPLACEMENT TILES IN THE REMODELED LIBRARY.

D. CO# 3 - NEW TOP CAPS, CONTRACTOR TO REUSE EXISTING TOP CAPS. 3 NEW TOP CAPS WERE BUILT (INLINE) AND PAINTED (GIVENS)

E. CO# 5 - REMOVE 2 OUTLETS AND CONDUITS IN COUNTER BACKSPLASH IN THE LIBRARY.

F. CO# 8 - MODIFY TENANT PROVIDED BOOKSHELVES IN LIBRARY SOUTH WALL.

G. CO# 9 - WASH EXTERIOR OF LIBRARY WINDOWS

City of Portland
Bureau of
Development Services
By SOS Date 11/2/12
Approved by
Planning and Zoning Review

City of Portland
REVIEWED FOR CODE COMPLIANCE
NOV 02 2012
Permit Number

[TKA] space planning/commercial renovation/ interior design/dental/medical
330 SE MLK Blvd, Suite 350
Portland Oregon 97214
ph: 503 235 0243
fx : 503 546 5698
TONI KING & ASSOCIATES

AS-BUILT SET FOR
BOISE ELLIOT ELEMENTARY
UPGRADE
620 N FREEMONT ST.
PORTLAND, OR 97227

DATE: 10.30.2012
FILE:
JOB: 2012-34-01
DWN: PK | CHK: TK

RM 116

NOT USED

1 DETAIL
N.T.S.

City of Portland
REVIEWED FOR CODE COMPLIANCE
NOV 02 2012
Permit Number

[TKA] space planning/commercial renovation/
interior design/dental/medical

330 SE MLK Blvd. Suite 350
Portland Oregon 97214

ph: 503 235 0243
fx : 503 546 5698

TONI KING & ASSOCIATES

AS-BUILT SET FOR
BOISE ELLIOT ELEMENTARY
UPGRADE
620 N FREEMONT ST.
PORTLAND, OR 97227

DATE: 10.30.2012
FILE:
JOB: 2012-34-01
DWN: PK | CHK: TK

DET1

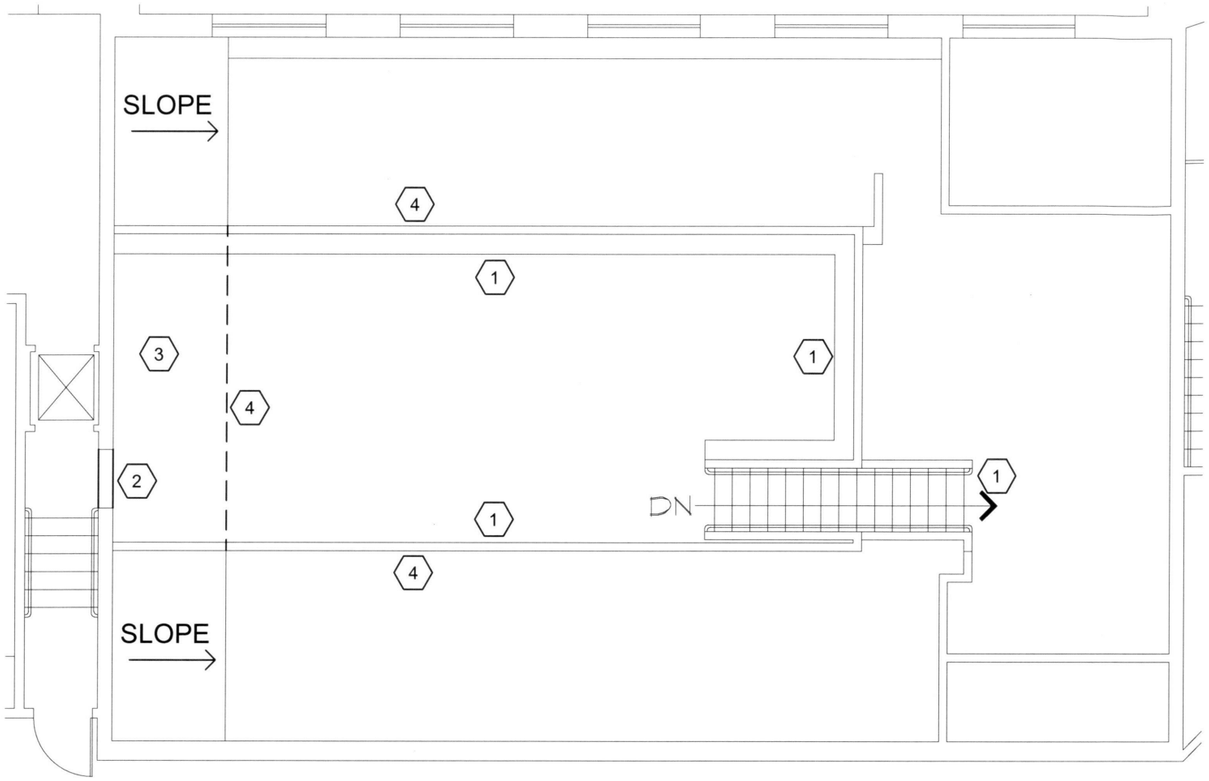

N 1 MEDIA CENTER / LIBRARY MEZZ. LEVEL

N.T.S.

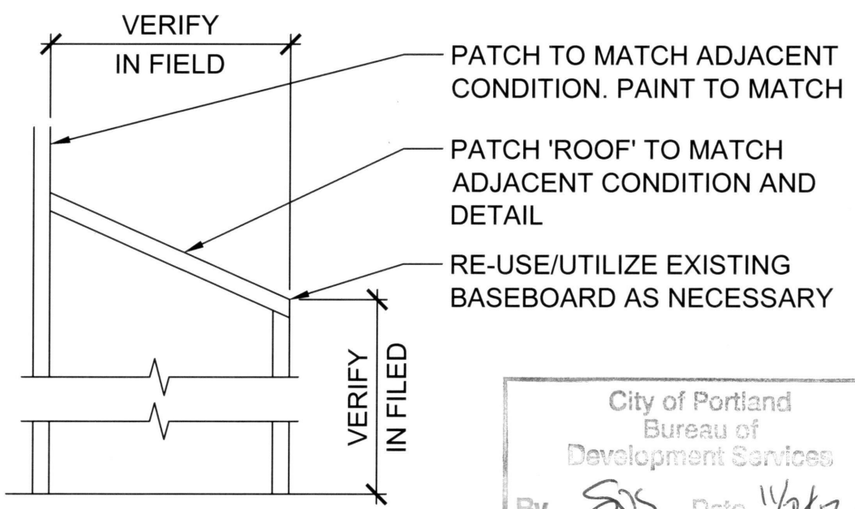

2 SECTION

N.T.S.

City of Portland
Bureau of
Development Services
By SOS Date 11/2/12
Approved by
Planning and Zoning Review

KEY NOTES

1. DEMO EXISTING MEZZANINE STRUCTURE AND CONNECTING STAIR CASE. SALVAGE (E) BOOKCASE.
2. IN-FILL EXISTING OPENING AND PROVIDE MATCHING ACOUSTICAL PANEL. ACOUSTICAL PANEL DETAIL TO MATCH EXISTING.
3. AFTER REMOVING MEZZANINE STRUCTURE, PATCH 'ROOF' PORTION AND PAINT TO MATCH EXISTING TAUPE TRIM. SEE SECTION #2 BELOW.
4. SAVE EXISTING WOOD BASEBOARD AND RE-USE IT ON NEW 'ROOF' AREA AS NECESSARY.

GENERAL NOTES

A. PAINT: PAINT ALL WALL SURFACES UP TO TRIM EXCLUSION - NO PAINT ON TRIM

B. PAINT: RODDA HEIRLOOM SILVER 8259

C. PERMIT DRAWING SET WILL BE PROVIDED FOR MEZZANINE DEMO AND NEW SHELVING LAYOUT.

D. SAVE EXISTING CARPET TILES FROM MEZZANINE FLOOR AND RE-USE THEM AS NECESSARY THROUGHOUT LIBRARY/MEDIA ROOM REMODEL.

E. CONTRACTOR TO INCLUDE COST TO DEMO EXISTING, POTENTIALLY, CONCRETE MEZZANINE STRUCTURE.

F. CO# 4 - LIBRARY PLASTER, CHANGED SCOPE CAUSED MORE PLASTER WORK TO BE DONE AT CORNICE COLUMNS

City of Portland
REVIEWED FOR CODE COMPLIANCE
NOV 02 2012
Permit Number

[TKA] space planning/commercial renovation/ interior design/dental/medical
330 SE MLK Blvd, Suite 350
Portland Oregon 97214
ph: 503 235 0243
fx : 503 546 5698
TONI KING & ASSOCIATES

AS-BUILT SET FOR
BOISE ELLIOT ELEMENTARY
UPGRADE
620 N FREEMONT ST.
PORTLAND, OR 97227

DATE: 10.30.2012
FILE:
JOB: 2012-34-01
DWN: PK | CHK: TK

RM 116

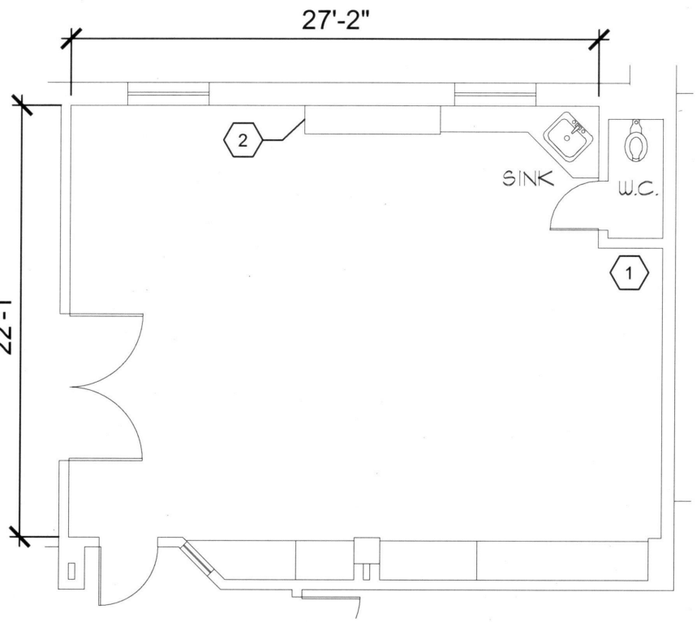

N 1 CLASSROOM 120

N.T.S.

FOR ALL FLOORS & WALLS

BASE BID:

FLOORS: PROCEDO "FAIRBANKS" STXB1210QFAI
PAINT: RODDA OWC4 OFF-WHITE

BID ALT. #1: PAINT ALL WALLS BELOW PICTURE RAIL

FLOORS: PROCEDO "PALM SPRINGS" STXB1210QPAL
PAINT: RODDA HEIRLOOM SILVER 8259

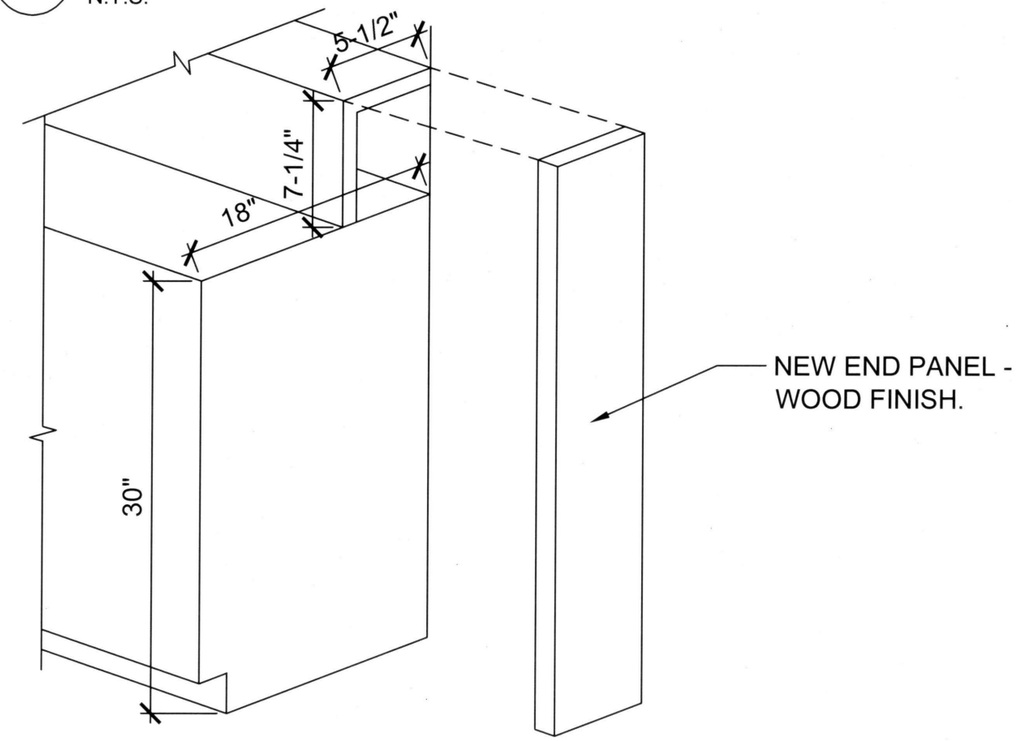

2 DETAIL

N.T.S.

KEY NOTES

1. REPAIR WALL SURFACES WHERE (E) BUILT-IN CASEWORK HAS BEEN REMOVED. PLASTER SKIM COAT PER PPS DESIGN STANDARD DIVISION 09.

2. PROVIDE NEW FINISHED END PANEL. SEE DETAIL 2 BELOW.

GENERAL NOTES

A. PAINT: PAINT WALL SURFACES AS NOTED
EXCLUSION - NO PAINT ON TRIM

B. NEW QUARTZ FLOORING AND WALL BASE IN THIS ROOM - APPROX. 660 SF.

C. PAINT WALLS WHERE INDICATED DURING PRE-BID WALK-THRU

D. REMOVE EXISTING TV & MOUNTING DEVICE. PATCH AFFECTED WALL AND PREP FOR NEW FINISH. RETURN ALL EQUIPMENT BACK TO PPS STOCKPILE

E. FIELD VERIFY MEASUREMENT, TYP.

F. CO# 6 - PAINT TOUCH UP ABOVE PICTURE RAIL.

City of Portland
REVIEWED FOR CODE COMPLIANCE
NOV 02 2012
Permit Number

[TKA] space planning/commercial renovation/ interior design/dental/medical
330 SE MLK Blvd, Suite 350
Portland Oregon 97214
ph: 503 235 0243
fx : 503 546 5698
TONI KING & ASSOCIATES

AS-BUILT SET FOR
BOISE ELLIOT ELEMENTARY UPGRADE
620 N FREEMONT ST.
PORTLAND, OR 97227

DATE: 10.30.2012
FILE:
JOB: 2012-34-01
DWN: PK | CHK: TK

RM 120

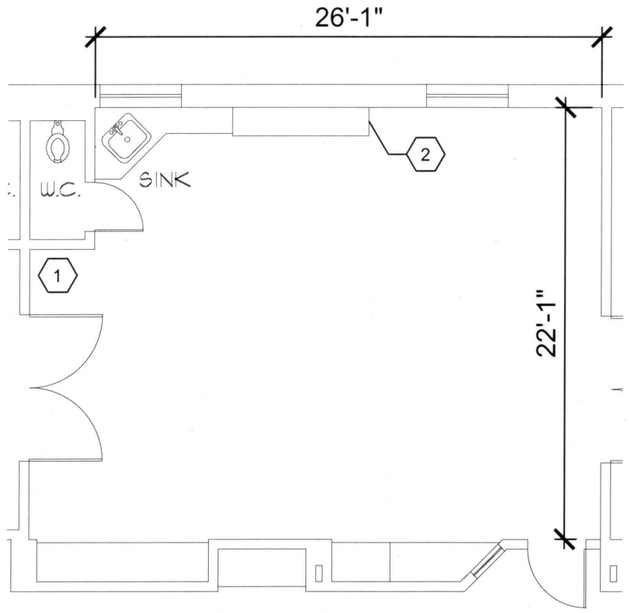

N 1 CLASSROOM 122

N.T.S.

FOR ALL FLOORS & WALLS

BASE BID:

FLOORS: PROCEDO "FAIRBANKS" STXB1210QFAI
PAINT: RODDA OWC4 OFF-WHITE

BID ALT. #1: PAINT ALL WALLS BELOW PICTURE RAIL

FLOORS: PROCEDO "PALM SPRINGS" STXB1210QPAL
PAINT: RODDA HEIRLOOM SILVER 8259

KEY NOTES

1. REPAIR WALL SURFACES WHERE (E) BUILT-IN CASEWORK HAS BEEN REMOVED. PLASTER SKIM COAT PER PPS DESIGN STANDARD DIVISION 09.

2. PROVIDE NEW FINISHED END PANEL. SEE DETAIL 2 ON SHEET ROOM 120.

GENERAL NOTES

A. PAINT: PAINT WALL SURFACES AS NOTED
EXCLUSION - NO PAINT ON TRIM

B. NEW QUARTZ FLOORING AND WALL BASE IN THIS ROOM - APPROX. 630 SF.

C. PAINT WALLS WHERE INDICATED DURING PRE-BID WALK-THRU

D. REMOVE EXISTING TV & MOUNTING DEVICE. PATCH AFFECTED WALL AND PREP FOR NEW FINISH. RETURN ALL EQUIPMENT BACK TO PPS STOCKPILE

E. FIELD VERIFY MEASUREMENT, TYP.

F. CO# 6 - PAINT TOUCH UP ABOVE PICTURE RAIL.

City of Portland
REVIEWED FOR CODE COMPLIANCE
NOV 02 2012
Permit Number

[TKA] space planning/commercial renovation/ interior design/dental/medical
330 SE MLK Blvd, Suite 350
Portland Oregon 97214
ph: 503 235 0243
fx : 503 546 5698
TONI KING & ASSOCIATES

AS-BUILT SET FOR
BOISE ELLIOT ELEMENTARY
UPGRADE
620 N FREEMONT ST.
PORTLAND, OR 97227

DATE: 10.30.2012
FILE:
JOB: 2012-34-01
DWN: PK | CHK: TK

RM 122

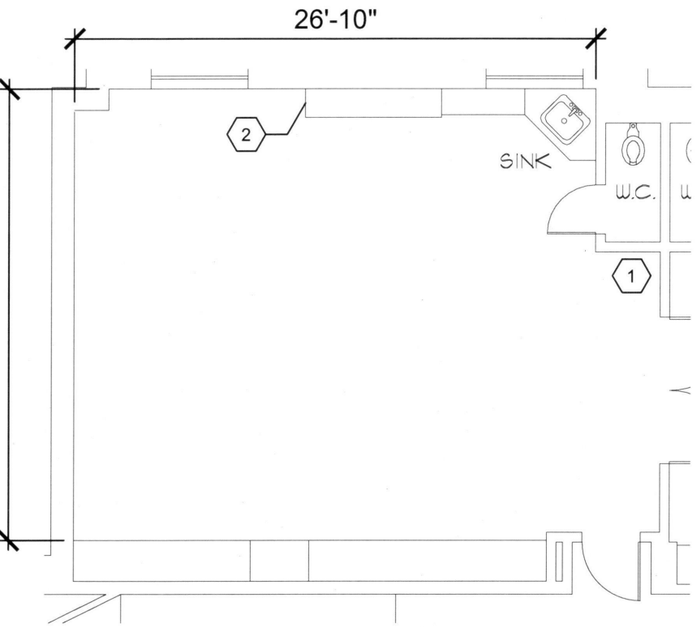

N 1 CLASSROOM 124

N.T.S.

FOR ALL FLOORS & WALLS

BASE BID:

FLOORS: PROCEDO "FAIRBANKS" STXB1210QFAI
PAINT: RODDA OWC4 OFF-WHITE

BID ALT. #1: PAINT ALL WALLS BELOW PICTURE RAIL

FLOORS: PROCEDO "PALM SPRINGS" STXB1210QPAL
PAINT: RODDA HEIRLOOM SILVER 8259

KEY NOTES

1. REPAIR WALL SURFACES WHERE (E) BUILT-IN CASEWORK HAS BEEN REMOVED. PLASTER SKIM COAT PER PPS DESIGN STANDARD DIVISION 09.

2. PROVIDE NEW FINISHED END PANEL. SEE DETAIL 2 ON SHEET ROOM 120.

GENERAL NOTES

A. PAINT: PAINT WALL SURFACES AS NOTED
EXCLUSION - NO PAINT ON TRIM

B. NEW QUARTZ FLOORING AND WALL BASE IN THIS ROOM - APPROX. 650 SF.

C. PAINT WALLS WHERE INDICATED DURING PRE-BID WALK-THRU

D. REMOVE EXISTING TV & MOUNTING DEVICE. PATCH AFFECTED WALL AND PREP FOR NEW FINISH. RETURN ALL EQUIPMENT BACK TO PPS STOCKPILE

E. FIELD VERIFY MEASUREMENT, TYP.

F. CO# 6 - PAINT TOUCH UP ABOVE PICTURE RAIL.

City of Portland
REVIEWED FOR CODE COMPLIANCE
NOV 02 2012
Permit Number

[TKA] space planning/commercial renovation/ interior design/dental/medical
330 SE MLK Blvd, Suite 350
Portland Oregon 97214
ph: 503 235 0243
fx.: 503 546 5698
TONI KING & ASSOCIATES

AS-BUILT SET FOR
BOISE ELLIOT ELEMENTARY
UPGRADE
620 N FREEMONT ST.
PORTLAND, OR 97227

DATE: 10.30.2012
FILE:
JOB: 2012-34-01
DWN: PK | CHK: TK

RM 124

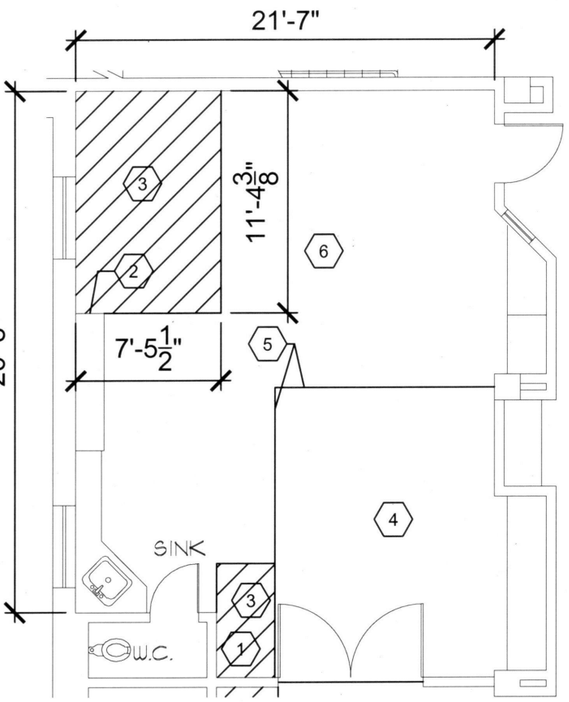

N 1 CLASSROOM 126

N.T.S.

KEY NOTES

1. REPAIR WALL SURFACES WHERE (E) BUILT-IN CASEWORK HAS BEEN REMOVED. PLASTER SKIM COAT PER PPS DESIGN STANDARD DIVISION 09.
2. PROVIDE NEW FINISHED END PANEL. SEE DETAIL 2 ON SHEET ROOM 120.
3. NEW VCT IN-FILL TO MATCH ADJACENT EXISTING - APPROX. 140 SF. PROVIDE NEW WALL BASE.
4. EXISTING CARPET TO REMAIN AS-IS. PROTECT DURING CONSTRUCTION.
5. PROVIDE NEW TRANSITION STRIP.
6. EXISTING VCT FLOORING TO REMAIN AS-IS. PROTECT DURING CONSTRUCTION.

GENERAL NOTES

A. PAINT: PAINT WALL SURFACES AS NOTED
EXCLUSION - NO PAINT ON TRIM

B. PAINT WALLS WHERE INDICATED DURING PRE-BID WALK-THRU

C. REMOVE EXISTING TV & MOUNTING DEVICE. PATCH AFFECTED WALL AND PREP FOR NEW FINISH. RETURN ALL EQUIPMENT BACK TO PPS STOCKPILE

D. FIELD VERIFY MEASUREMENT, TYP.

F. CO# 6 - PAINT TOUCH UP ABOVE PICTURE RAIL.

G. CO# 1 - ADDED SCOPE OF LABOR, PREP TIME AND MATERIALS FOR FLOORING MODIFICATION.

City of Portland
REVIEWED FOR CODE COMPLIANCE
NOV 02 2012
Permit Number

[TKA] space planning/commercial renovation/ interior design/dental/medical
330 SE MLK Blvd, Suite 350
Portland Oregon 97214
ph: 503 235 0243
fx: 503 546 5698
TONI KING & ASSOCIATES

AS-BUILT SET FOR
BOISE ELLIOT ELEMENTARY
UPGRADE
620 N FREEMONT ST.
PORTLAND, OR 97227

DATE: 10.30.2012
FILE:
JOB: 2012-34-01
DWN: PK | CHK: TK

RM 126

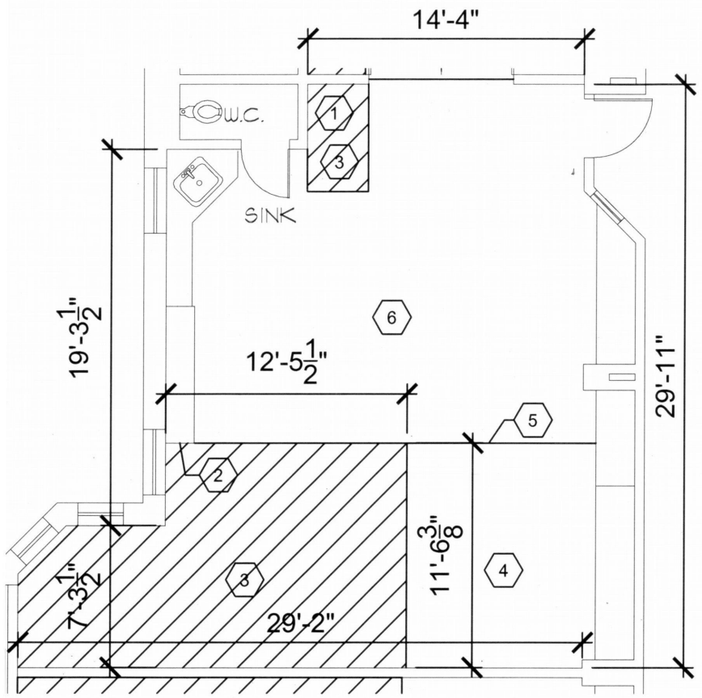

N 1 CLASSROOM 128

N.T.S.

KEY NOTES

1. REPAIR WALL SURFACES WHERE (E) BUILT-IN CASEWORK HAS BEEN REMOVED. PLASTER SKIM COAT PER PPS DESIGN STANDARD DIVISION 09.
2. PROVIDE NEW FINISHED END PANEL. SEE DETAIL 2 ON SHEET ROOM 120.
3. NEW VCT IN-FILL TO MATCH ADJACENT EXISTING - APPROX. 220 SF. PROVIDE NEW WALL BASE.
4. EXISTING CARPET TO REMAIN AS-IS. PROTECT DURING CONSTRUCTION.
5. PROVIDE NEW TRANSITION STRIP.
6. EXISTING VCT FLOORING TO REMAIN AS-IS. PROTECT DURING CONSTRUCTION.

GENERAL NOTES

A. PAINT: PAINT WALL SURFACES AS NOTED
EXCLUSION - NO PAINT ON TRIM

B. PAINT WALLS WHERE INDICATED DURING PRE-BID WALK-THRU

C. EXISTING TV & EQUIPMENT TO REMAIN AS-IS

D. FIELD VERIFY MEASUREMENT, TYP.

F. CO# 6 - PAINT TOUCH UP ABOVE PICTURE RAIL.

G. CO# 1 - ADDED SCOPE OF LABOR, PREP TIME AND MATERIALS FOR FLOORING MODIFICATION

City of Portland
REVIEWED FOR CODE COMPLIANCE
NOV 02 2012
Permit Number

[TKA] space planning/commercial renovation/ interior design/dental/medical
330 SE MLK Blvd, Suite 350
Portland Oregon 97214
ph: 503 235 0243
fx: 503 546 5698
TONI KING & ASSOCIATES

AS-BUILT SET FOR
BOISE ELLIOT ELEMENTARY UPGRADE
620 N FREEMONT ST.
PORTLAND, OR 97227

DATE: 10.30.2012
FILE:
JOB: 2012-34-01
DWN: PK | CHK: TK

RM 128

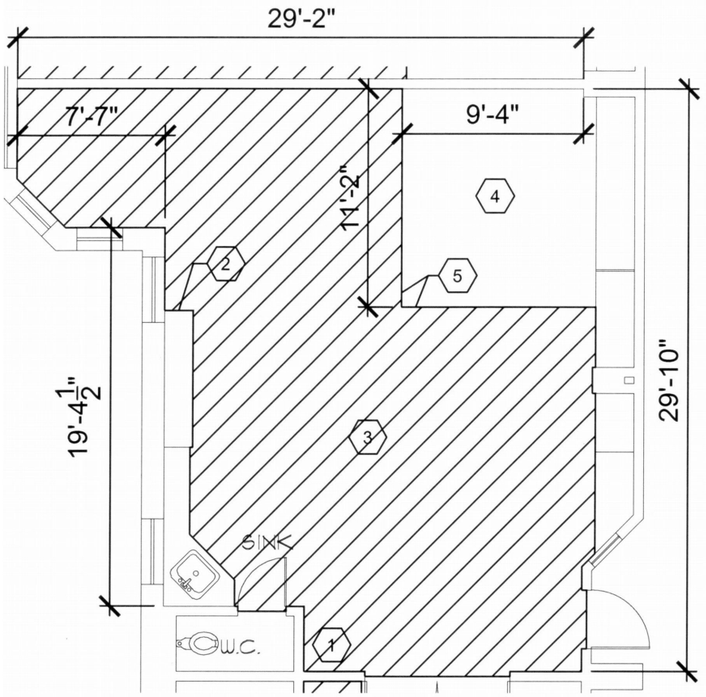

N 1

CLASSROOM 130

N.T.S.

FOR ALL FLOORS & WALLS

BASE BID:

FLOORS: PROCEDO "FAIRBANKS" STXB1210QFAI
PAINT: RODDA OWC4 OFF-WHITE

BID ALT. #1: PAINT ALL WALLS BELOW PICTURE RAIL

FLOORS: PROCEDO "PALM SPRINGS" STXB1210QPAL
PAINT: RODDA HEIRLOOM SILVER 8259

KEY NOTES

1. REPAIR WALL SURFACES WHERE (E) BUILT-IN CASEWORK HAS BEEN REMOVED. PLASTER SKIM COAT PER PPS DESIGN STANDARD DIVISION 09.
2. PROVIDE NEW FINISHED END PANEL. SEE DETAIL 2 ON SHEET ROOM 120.
3. NEW QUARTZ FLOORING - APPROX. 470 SF. PROVIDE NEW WALL BASE.
4. EXISTING CARPET TO REMAIN AS-IS. PROTECT DURING CONSTRUCTION.
5. PROVIDE NEW TRANSITION STRIP.

GENERAL NOTES

A. PAINT: PAINT WALL SURFACES AS NOTED
EXCLUSION - NO PAINT ON TRIM

B. PAINT WALLS WHERE INDICATED DURING PRE-BID WALK-THRU

C. FIELD VERIFY MEASUREMENT, TYP.

F. CO# 6 - PAINT TOUCH UP ABOVE PICTURE RAIL.

City of Portland
REVIEWED FOR CODE COMPLIANCE
NOV 02 2012
Permit Number

[TKA] space planning/commercial renovation/ interior design/dental/medical
330 SE MLK Blvd, Suite 350
Portland Oregon 97214
ph: 503 235 0243
fx : 503 546 5698
TONI KING & ASSOCIATES

AS-BUILT SET FOR
BOISE ELLIOT ELEMENTARY
UPGRADE
620 N FREEMONT ST.
PORTLAND, OR 97227

DATE: 10.30.2012
FILE:
JOB: 2012-34-01
DWN: PK | CHK: TK

RM 130

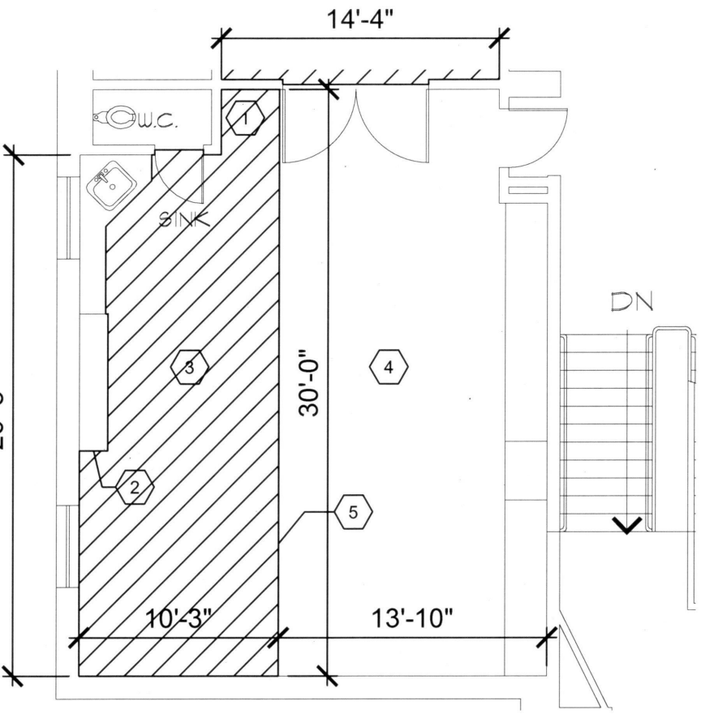

N 1 CLASSROOM 132

N.T.S.

FOR ALL FLOORS & WALLS

BASE BID:

FLOORS: PROCEDO "FAIRBANKS" STXB1210QFAI
PAINT: RODDA OWC4 OFF-WHITE

BID ALT. #1: PAINT ALL WALLS BELOW PICTURE RAIL

FLOORS: PROCEDO "PALM SPRINGS" STXB1210QPAL
PAINT: RODDA HEIRLOOM SILVER 8259

KEY NOTES

1. REPAIR WALL SURFACES WHERE (E) BUILT-IN CASEWORK HAS BEEN REMOVED. PLASTER SKIM COAT PER PPS DESIGN STANDARD DIVISION 09.
2. PROVIDE NEW FINISHED END PANEL. SEE DETAIL 2 ON SHEET ROOM 120.
3. NEW QUARTZ FLOORING - APPROX. 290 SF. PROVIDE NEW WALL BASE.
4. EXISTING CARPET TO REMAIN AS-IS. PROTECT DURING CONSTRUCTION.
5. PROVIDE NEW TRANSITION STRIP.

GENERAL NOTES

A. PAINT: PAINT WALL SURFACES AS NOTED
EXCLUSION - NO PAINT ON TRIM

B. PAINT WALLS WHERE INDICATED DURING PRE-BID WALK-THRU

C. FIELD VERIFY MEASUREMENT, TYP.

F. CO# 6 - PAINT TOUCH UP ABOVE PICTURE RAIL.

City of Portland
REVIEWED FOR CODE COMPLIANCE
NOV 02 2012
Permit Number

[TKA] space planning/commercial renovation/ interior design/dental/medical
330 SE MLK Blvd, Suite 350
Portland Oregon 97214
ph: 503 235 0243
fx.: 503 546 5698
TONI KING & ASSOCIATES

AS-BUILT SET FOR
BOISE ELLIOT ELEMENTARY
UPGRADE
620 N FREEMONT ST.
PORTLAND, OR 97227

DATE: 10.30.2012
FILE:
JOB: 2012-34-01
DWN: PK | CHK: TK

RM 132

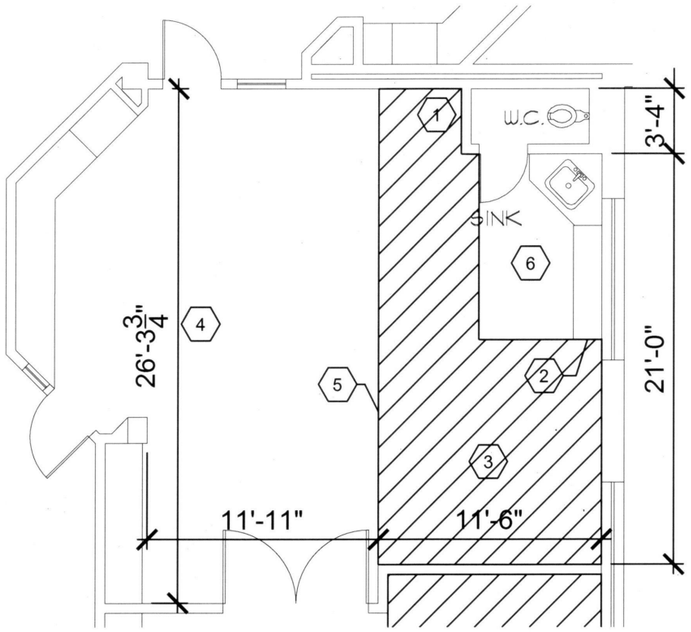

N 1 CLASSROOM 137

N.T.S.

KEY NOTES

1. REPAIR WALL SURFACES WHERE (E) BUILT-IN CASEWORK HAS BEEN REMOVED. PLASTER SKIM COAT PER PPS DESIGN STANDARD DIVISION 09.
2. PROVIDE NEW FINISHED END PANEL. SEE DETAIL 2 ON SHEET ROOM 120.
3. NEW VCT TO MATCH ADJACENT EXISTING - APPROX. 150 SF. PROVIDE NEW WALL BASE.
4. EXISTING CARPET TO REMAIN AS-IS. PROTECT DURING CONSTRUCTION.
5. PROVIDE NEW TRANSITION STRIP.
6. EXISTING VCT FLOORING TO REMAIN AS-IS. PROTECT DURING CONSTRUCTION.

GENERAL NOTES

A. PAINT: PAINT WALL SURFACES AS NOTED
EXCLUSION - NO PAINT ON TRIM

B. PAINT WALLS WHERE INDICATED DURING PRE-BID WALK-THRU

C. EXISTING TV & EQUIPMENT TO REMAIN AS-IS

D. FIELD VERIFY MEASUREMENT, TYP.

F. CO# 6 - PAINT TOUCH UP ABOVE PICTURE RAIL.

G. CO# 1 - ADDED SCOPE OF LABOR, PREP TIME AND MATERIALS FOR FLOORING MODIFICATION

City of Portland
REVIEWED FOR CODE COMPLIANCE
NOV 02 2012
Permit Number

[TKA] space planning/commercial renovation/ interior design/dental/medical
330 SE MLK Blvd, Suite 350
Portland Oregon 97214
ph: 503 235 0243
fx: 503 546 5698
TONI KING & ASSOCIATES

AS-BUILT SET FOR
BOISE ELLIOT ELEMENTARY
UPGRADE
620 N FREEMONT ST.
PORTLAND, OR 97227

DATE: 10.30.2012
FILE:
JOB: 2012-34-01
DWN: PK | CHK: TK

RM 137

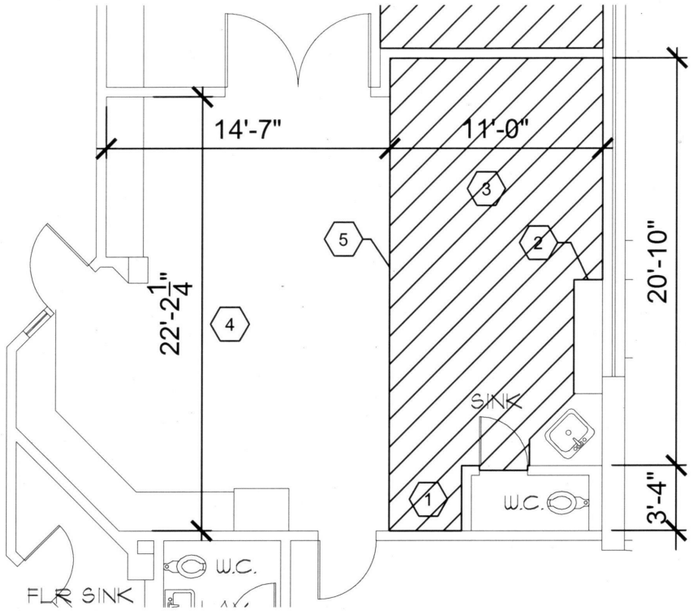

N 1 CLASSROOM 139

N.T.S.

KEY NOTES

1. REPAIR WALL SURFACES WHERE (E) BUILT-IN CASEWORK HAS BEEN REMOVED. PLASTER SKIM COAT PER PPS DESIGN STANDARD DIVISION 09.
2. PROVIDE NEW FINISHED END PANEL. SEE DETAIL 2 ON SHEET ROOM 120.
3. NEW VCT TO MATCH ROOM 137 - APPROX. 200 SF. PROVIDE NEW WALL BASE.
4. EXISTING CARPET TO REMAIN AS-IS. PROTECT DURING CONSTRUCTION.
5. PROVIDE NEW TRANSITION STRIP.

GENERAL NOTES

A. PAINT: PAINT WALL SURFACES AS NOTED
EXCLUSION - NO PAINT ON TRIM

B. PAINT WALLS WHERE INDICATED DURING PRE-BID WALK-THRU

C. EXISTING TV & EQUIPMENT TO REMAIN AS-IS

D. FIELD VERIFY MEASUREMENT, TYP.

F. CO# 6 - PAINT TOUCH UP ABOVE PICTURE RAIL.

City of Portland
REVIEWED FOR CODE COMPLIANCE
NOV 02 2012
Permit Number

[TKA] space planning/commercial renovation/ interior design/dental/medical
330 SE MLK Blvd, Suite 350
Portland Oregon 97214
ph: 503 235 0243
fx: 503 546 5698
TONI KING & ASSOCIATES

AS-BUILT SET FOR
BOISE ELLIOT ELEMENTARY
UPGRADE
620 N FREEMONT ST.
PORTLAND, OR 97227

DATE: 10.30.2012
FILE:
JOB: 2012-34-01
DWN: PK | CHK: TK

RM 139

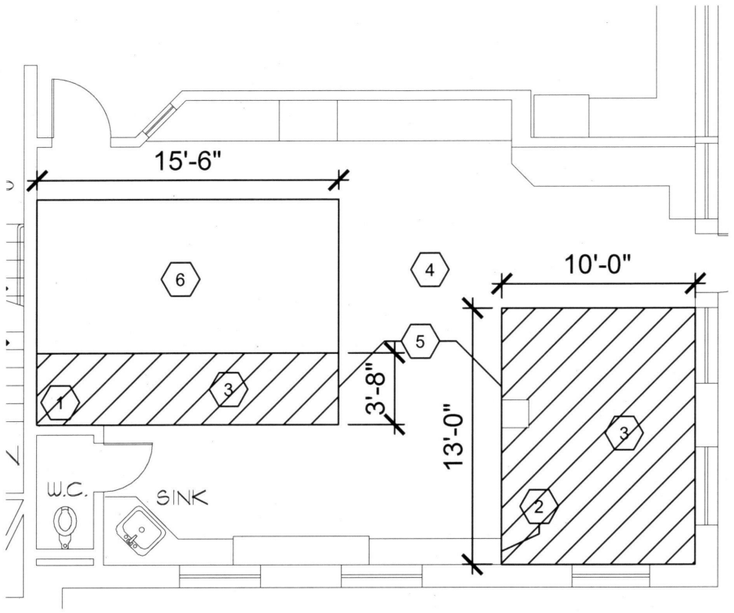

N 1 CLASSROOM 145

N.T.S.

KEY NOTES

1. REPAIR WALL SURFACES WHERE (E) BUILT-IN CASEWORK HAS BEEN REMOVED. PLASTER SKIM COAT PER PPS DESIGN STANDARD DIVISION 09.
2. PROVIDE NEW FINISHED END PANEL. SEE DETAIL 2 ON SHEET ROOM 120.
3. NEW CARPET TO MATCH EXISTING. PROVIDE NEW WALL BASE.
4. EXISTING VCT FLOORING TO REMAIN AS-IS. PROTECT DURING CONSTRUCTION.
5. PROVIDE NEW TRANSITION STRIP.
6. EXISTING CARPET FLOORING TO REMAIN AS-IS. PROTECT DURING CONSTRUCTION.

GENERAL NOTES

A. PAINT: PAINT WALL SURFACES AS NOTED
EXCLUSION - NO PAINT ON TRIM

B. PAINT WALLS WHERE INDICATED DURING PRE-BID WALK-THRU

C. FIELD VERIFY MEASUREMENT, TYP.

F. CO# 6 - PAINT TOUCH UP ABOVE PICTURE RAIL.

G. CO# 1 - ADDED SCOPE OF LABOR, PREP TIME AND MATERIALS FOR FLOORING MODIFICATION

City of Portland
REVIEWED FOR CODE COMPLIANCE
NOV 02 2012
Permit Number

[TKA] space planning/commercial renovation/ interior design/dental/medical
330 SE MLK Blvd, Suite 350
Portland Oregon 97214
ph: 503 235 0243
fx.: 503 546 5698
TONI KING & ASSOCIATES

AS-BUILT SET FOR
BOISE ELLIOT ELEMENTARY
UPGRADE
620 N FREEMONT ST.
PORTLAND, OR 97227

DATE: 10.30.2012
FILE:
JOB: 2012-34-01
DWN: PK | CHK: TK

RM 145

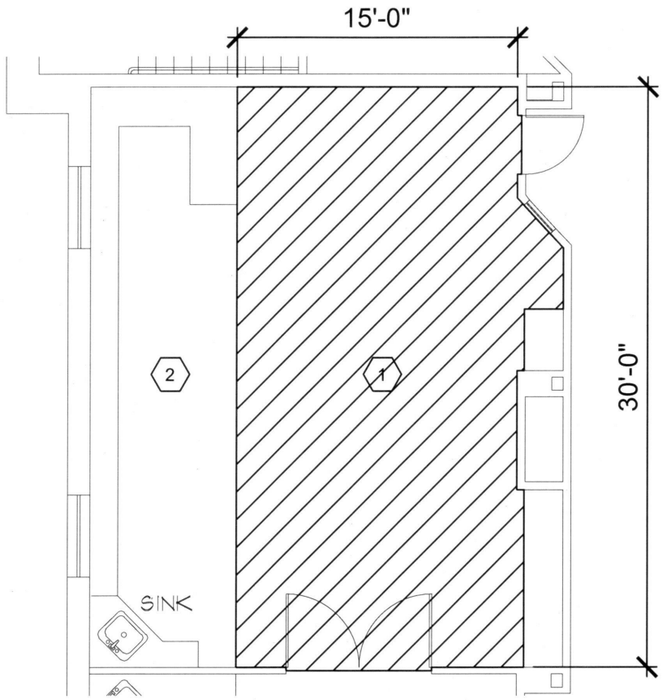

N 1 CLASSROOM 226

N.T.S.

KEY NOTES

1. NEW VCT IN-FILL TO MATCH ADJACENT EXISTING - APPROX. 450 SF. PROVIDE NEW WALL BASE.

2. EXISTING VCT FLOORING TO REMAIN AS-IS. PROTECT DURING CONSTRUCTION.

GENERAL NOTES

A. PAINT: NO PAINT IN THIS ROOM

B. REMOVE EXISTING TV & MOUNTING DEVICE. PATCH AFFECTED WALL AND PREP FOR NEW FINISH. RETURN ALL EQUIPMENT BACK TO PPS STOCKPILE

C. FIELD VERIFY MEASUREMENT, TYP.

F. CO# 6 - PAINT TOUCH UP ABOVE PICTURE RAIL.

G. CO# 1 - ADDED SCOPE OF LABOR, PREP TIME AND MATERIALS FOR FLOORING MODIFICATION

City of Portland
REVIEWED FOR CODE COMPLIANCE
NOV 02 2012
Permit Number

[TKA] space planning/commercial renovation/ interior design/dental/medical
330 SE MLK Blvd, Suite 350
Portland Oregon 97214
ph: 503 235 0243
fx : 503 546 5698
TONI KING & ASSOCIATES

AS-BUILT SET FOR
BOISE ELLIOT ELEMENTARY
UPGRADE
620 N FREEMONT ST.
PORTLAND, OR 97227

DATE: 10.30.2012
FILE:
JOB: 2012-34-01
DWN: PK | CHK: TK

RM 226

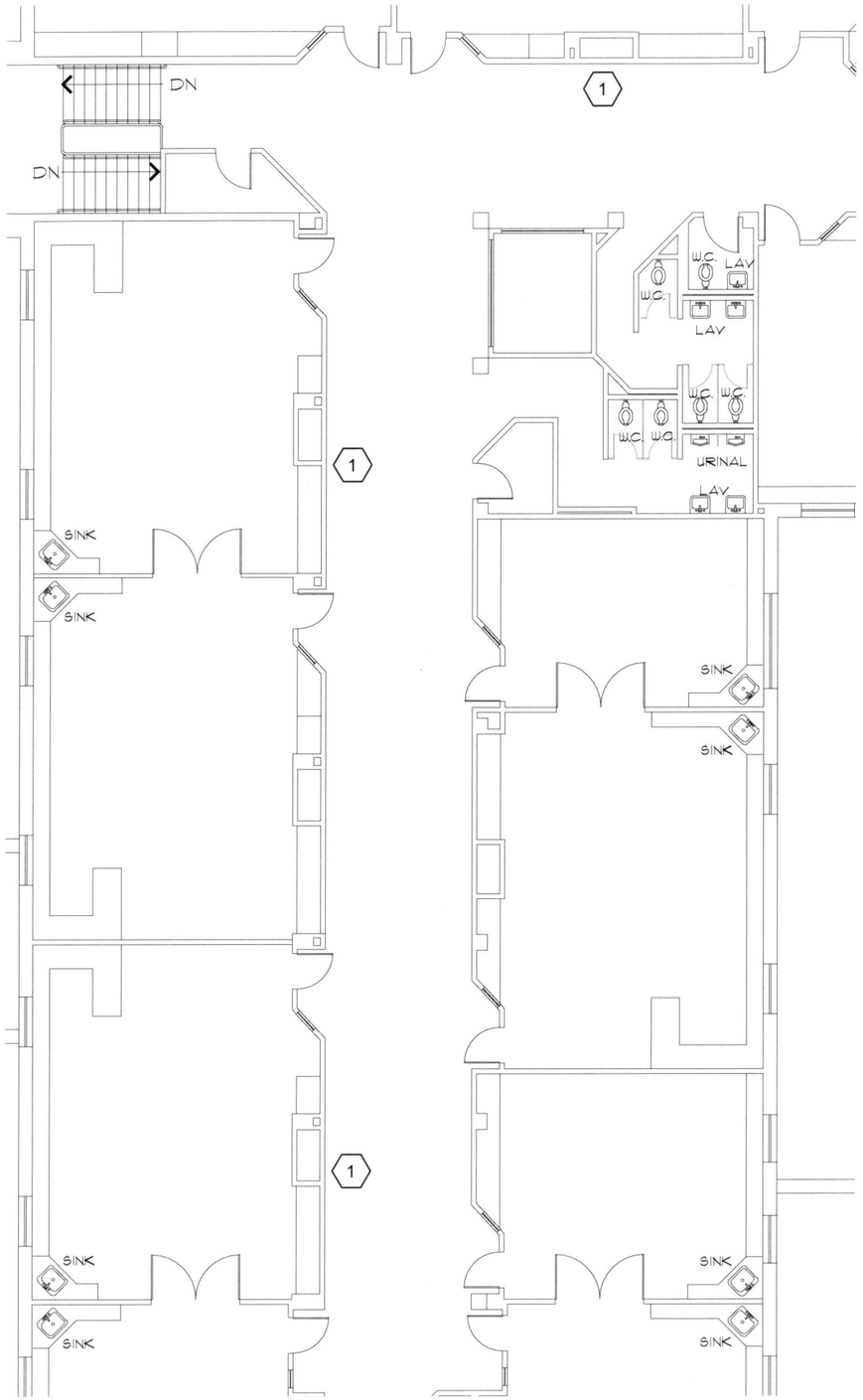

N 1 HALLWAY

N.T.S.

KEY NOTES

1 CO# 2 - INSTALL OWNER PROVIDED METAL LOCKERS.

[TKA] space planning/commercial renovation/ interior design/dental/medical

330 SE MLK Blvd, Suite 350
Portland Oregon 97214

ph: 503 235 0243
fx.: 503 546 5698

TONI KING & ASSOCIATES

AS-BUILT SET FOR
BOISE ELLIOT ELEMENTARY
UPGRADE
620 N FREEMONT ST.
PORTLAND, OR 97227

City of Portland
REVIEWED FOR CODE COMPLIANCE
Permit Number

DATE: 10.30.2012
FILE:
JOB: 2012-34-01
DWN: PK | CHK: TK

HALL